Mullard

technical handbook

Book 2

Electronic tubes

Part 3

Photomultiplier tubes
Phototubes
Channel electron multipliers
Dynode electron multiplier

1987

Book 2 Part 3

Electronic tubes

Photomultiplier tubes
Phototubes
Channel electron multipliers
Dynode electron multiplier

MULLARD LTD., MULLARD HOUSE, TORRINGTON PLACE,
LONDON, WC1E 7HD

Telephone 01-580 6633 Telex: 264341

PHOTO AND ELECTRON MULTIPLIERS

page

Photomultiplier tubes

Phototubes

Discrete dynode electron multipliers

Single channel electron multipliers

Channel electron multiplier plates

Associated accessories

PHOTOMULTIPLIER TUBES

RATING SYSTEM

(in accordance with IEC Publication 134)

ABSOLUTE MAXIMUM RATING SYSTEM

Absolute maximum ratings are limiting values of operating and environmental conditions applicable to any electronic device of a specified type as defined by its published data, which should not be exceeded under the worst probable conditions.

These values are chosen by the device manufacturer to provide acceptable serviceability of the device, taking no responsibility for equipment variations, environmental variations, and the effects of changes in operating conditions due to variations in the characteristics of the device under consideration and of all other electronic devices in the equipment.

The equipment manufacturer should design so that, initially and throughout life, no absolute maximum value for the intended service is exceeded with any device under the worst probable operating conditions with respect to supply variation, equipment component variation, equipment control adjustment, load variations, signal variation, environmental conditions, and variations in characteristics of the device under consideration and of all other electronic devices in the equipment.

Dimensional drawings are in mm unless otherwise indicated.

SURVEY OF TYPES

photocathode	useful dia mm	type	number of stages	photocathode spectral sensitivity, $sk_e(\lambda)$ mA/W	λ (nm)	anode sensitivity 1) A/lm 2) A/lmF 3) kA/W 4) gain	at total voltage V	rise time ns	anode pulse linearity mA	page
bialkaline SbKCs on quartz window	44	XP2020/Q	12	80	400	4) 3 x 10^7	2200	1,5	280	75
bialkaline SbRbCs on quartz window	32	XP2018B	10	75	440	3) 60	1350	2,5	200	67
bialkaline SbKCs on UV-glass window	110	XP2041	14	85	400	4) 3 x 10^7	2200	2,0	280	97
bialkaline SbKCs	14	XP1911	10	80	400	2) 10	1200	2,3	80	27
	23	XP2962	8	75	400	2) 1	1100	1,8	80	241
	23	XP2972 +	10	75	400	2) 10	1300	1,9	80	257
	23	XP2982	11	75	400	2) 30	1350	1,9	80	265
	32	XP2012*	10	90	400	3) 60	1350	2,5	200	51
	34	XP2062*	10	85	400	2) 7,5	1300	2,5	200	115
	34	XP2071*	10	90	400	2) 7,5	1250	2,5	200	123
	34	XP2072*	10	95	400	2) 7,5	1230	2,5	200	131
	44	XP2020	12	85	400	4) 3 x 10^7	2200	1,5	280	75
	46	XP2102*+	10VB	85	400	2) 1,5	1250	10	10	139
	44	XP2202*	10	75	400	3) 60	1400	3,5	200	147
	44	XP2212*+	12	75	400	4) 3 x 10^7	1900	4,0	250	163
	44	XP2242B	6	80	400	4) 10^4	1100	1,6	350	179
	44	XP2252*	12	80	400	4) 3 x 10^7	1850	2,0	250	187
	44	XP2262*	12	80	400	4) 3 x 10^7	1850	2,0	250	207
	46	XP3102*+	8	90	400	2) 1,5	950	3,0	100	273
	46	XP3202*+	8	75	400	2) 1,5	950	3,0	100	281
	56	XP2432*+	10VB	90	400	2) 1,5	1250	10	10	233
	56H	XP3422*+	8	95	400	2) 1,5	950	3,0	100	289
	68	XP2312*	12	85	400	4) 3 x 10^7	2000	2,5	250	217
	70	XP2412*+	10VB	105	400	2) 1,5	1250	11	10	225
	110	XP2050	10VB	95	400	3) 12	1270	16	10	107
bialkaline SbRbCs	32	XP2011*	10	85	440	2) 7,5	1300	2,5	200	43
bialkaline SbNaKCs	14	XP1117 +	9	13	700	1) 30	1520	3,5	30	19
	23	XP2963	8	20	700	1) 6	1120	1,8	80	241
	32	XP2023B	8	20	700	1) 6	1120	2,5	200	89
	44	XP2203B	10	16	700	1) 60	1350	3,5	200	155
	44	XP2233B	12	15	700	4) 3 x 10^7	2050	2,0	250	171
trialkaline SbNaKCs on quartz window	44	XP2254B	12	15	700	4) 3 x 10^7	2700	1,5	280	197
trialkaline SbNaKCs (S20R)	34	XP2017B	10	6,5	860	1) 60	1200	2,5	200	59
bialkaline SbRbCs	20	AV29	diode	80	440	C_{ak} = 6 pF	1-1000	3,0	15 x 10^{-3}	313
bialkaline SbKCs	20x20	XP4702	10	40	400	4) 10^6	1400	4,8	**	307

H = hexagonal shape, dimensions between flats; for other hexagonal tubes please contact us.
VB = venetian blind multiplier
* = also available with plastic base by adding B to the type number
\+ = can be supplied with standard or customized integral PC-board voltage divider.
** = 64 channel photomultiplier.

REPLACEMENT LIST

The previous type reference PM (as e.g. in PM2412) has been replaced by XP (so: XP2412), due to a change in the type number system.

A number of photomultiplier tubes are no longer available and relevant device data are not given in this book any more.

The list below gives possible replacements. In case of doubt, please contact your supplier.

old type	replaced by
PM1980	XP2972
PM1982	XP2982
XP1000	XP2202B
XP1001	XP2202B
XP1002	XP2203B
XP1003	XP2254B
XP1006	XP2202B
XP1010	XP2012B
XP1016	XP2023B
XP1017	XP2017B
XP1020	XP2020
XP1021	XP2020
XP1023	XP2020/Q
XP1030	XP2412B or XP2312B
XP1031	XP2412B or XP2312B
XP1034	XP2412B or XP2312B
XP1040	XP2041
XP1041	XP2041
XP1110	XP1911
XP1113	XP1920
XP2008	XP2071B
XP2008UB	XP2071
XP2010	XP2072B

old type	replaced by
XP1180	XP2972
XP1910	XP1911
XP2000	XP2102B or XP3102B
XP2000UB	XP2102 or XP3102
XP2030	XP2412B
XP2030UB	XP2412
XP2040	XP2041
XP2061	XP2062
XP2061B	XP2062B
XP2230	XP2252
XP2230B	XP2252B
XP2232	XP2262 or XP2252
XP2232B	XP2262B or XP2252B
54AVP	XP2050
54DVP	XP2050
56AVP*	XP2262B or XP2252B
56DUVP*	XP2020/Q
56DVP*	XP2262B or XP2252B
56TUVP*	XP2254B
56TVP*	XP2233B
56UVP*	XP2020/Q
58AVP	XP2041
58DVP	XP2041
58UVP	XP2041/Q

* See next page for obsolete types 56 AVP family.

Our well known 56AVP family photomultiplier tubes with 44 mm photocathode diameter are replaced by more modern tubes with improved characteristics.

obsolete type	photo-cathode	dynodes	seated length mm	replacement type	photo-cathode	dynodes	seated length mm
56AVP	S11 (A)	14	170	XP2020 XP2252B XP2262B	D D D	12 12 12	170 152 145
56CVP	S1 (C)	10	152	no replacement			
56DUVP	DU	14	170	XP2020/Q	DU	12	170
56DVP	D	14	170	XP2020 XP2252B XP2262B	D D D	12 12 12	170 152 145
56TUVP	TU	14	170	XP2254B	TU	12	170
56TVP	S20 (T)	14	170	XP2233B	S20 (T)	12	145

All replacement types have 12-stage multipliers and are unilaterally interchangeable with the 56AVP family tubes. By connection of dynode S_4 to pins 15 and 16 of the plastic base, the resistors between S_4-S_5 and between S_5-S_6 are short-circuited in bleeders wired for the 56AVP family tubes as indicated in figures below.

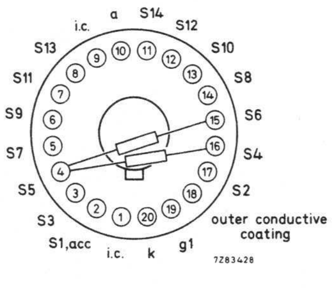

14-stage.

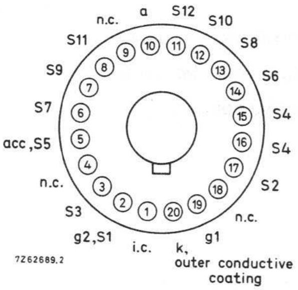

12-stage.

LIST OF SYMBOLS

		*
Photocathode	k	
Secondary emission electrode (dynode) n	S_n	dn
Anode	a	
Accelerating electrode	acc	g
Grid	g	
Cathode luminous sensitivity	N_k	sk_v
Cathode spectral sensitivity	N_{kr}	$sk_{e(\lambda)}$
Anode luminous sensitivity	N_a	sa_v
Anode spectral sensitivity	N_{ar}	$sa_{e(\lambda)}$
Anode blue sensitivity		sa_F
Current amplification (gain)	G	
Total supply voltage	V_b	V_{ht}
Anode current	I_a	
Anode dark current	I_{ao}	i_{da}
Cathode current	I_k	
Wavelength	λ	
Internal connection (do not use)	i.c.	
Non-connected pin (may be used)	n.c.	
External conductive coating	m	

---

* The symbols in the left-hand column are gradually being replaced by those in the right-hand column.

GENERAL DESCRIPTION

A photomultiplier is a non-thermionic vacuum tube which converts light into an electrical signal and internally amplifies that signal to a useful level. As shown in Fig.1, a photomultiplier normally consists of

- a window to admit light
- a photocathode which emits electrons in response to light
- an electron-optical input system which focuses the emitted electrons
- a series of electrodes, called dynodes, which multiply the electrons by secondary emission
- an anode which collects the multiplied electrons.

An external voltage divider provides the potentials that accelerate the electrons from the photocathode to the first dynode, from dynode to dynode, and from the last dynode to the anode. Depending on the number of dynodes and the applied voltage, one electron emitted from the cathode may give rise to as many as 10^8 electrons at the anode.

The photocathode, consisting of a layer of photoemissive material deposited on a substrate, may be opaque or semitransparent. Opaque cathodes, deposited on a metal plate inside the tube, are generally easier to manufacture; semitransparent cathodes, deposited on the inside of the window, are more versatile. All the photomultipliers listed in this book have semitransparent cathodes.

The materials of the window and the photocathode together determine the spectral response of the tube; see Table 1 and Fig.2. Type S1(C) and S20R spectral response characteristics extend usefully into the near-infrared. Types S13(U), DU and TU extend usefully into the ultraviolet. Type S20(T) spans the range from near-infrared to ultraviolet, with a peak at a about 420 nm.

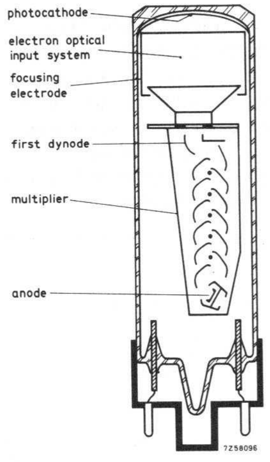

Fig.1 Photomultiplier tube

TABLE 1. COMPOSITION AND SPECTRAL RESPONSE CHARACTERISTICS OF PHOTOCATHODES						
SPECTRAL RESPONSE TYPE	**COMPOSITION**	**WINDOW**	**PHOTO-EMISSION THRESHOLD (nm)**	**WAVELENGTH AT MAXIMUM SENSITIVITY λ_{max} (nm)**	**RADIANT SENSITIVITY AT λ_{max} (mA/W)**	**QUANTUM EFFICIENCY AT λ_{max} (%)**
S1(C)	AgOCs	glass	1100	800	2,3	0,36
S4	SbCs	glass	680	400	50	16
S11(A)	SbCs	glass	680	440	60	17
Super A	SbCs	glass	700	440	80	22
S13(U)	SbCs	fused silica	680	440	60	17
S20(T)	SbNaKCs	glass	850	420	70	20
S20R	SbNaKCs	glass	900	550	35	8
TU	SbNaKCs	fused silica	850	420	70	20
bialkali	SbRbCs	glass	700	420	85	25
bialkali	SbKCs	glass	630	400	85	26
bialkali	SbKCs	fused silica	630	400	85	26
SB	CsTe	fused silica	340	235	20	10

The response speed and other time characteristics of the tube depend mainly on the electron-optical input system and the electron-multiplier dynode structure. Of the several types of dynode structure in use, two predominate among the tubes listed here:

- linear focused dynodes, which progressively focus the electron paths as they advance through the multiplier. This minimizes electron transit time variations between stages and makes for very fast response.
- venetian blind dynodes, in which each dynode consists of numerous parallel strips slanted with respect to the tube axis. The large surface area the first dynode presents to the photocathode enables good collection efficiency to be obtained with a fairly simple electron-optical input system. Gain stability is good, but response is slow compared with linear focused dynodes.

Materials commonly used for dynodes include AgMg, NiAl and CuBe. All the photomultipliers listed here have CuBe dynodes; although this does not give so high a secondary emission coefficient as some other materials, its stability is superior.

If all the dynodes have the same secondary emission coefficient δ (as is usually the case) the gain of the electron multiplier is proportional to δ^n, where n is the number of dynodes.

PHOTOMULTIPLIER CHARACTERISTICS

The characteristics described in photomultiplier data sheets relate to sensitivity, gain, response time, dark current, linearity and stability; and, for tubes intended for such applications as scintillation counting, energy resolution.

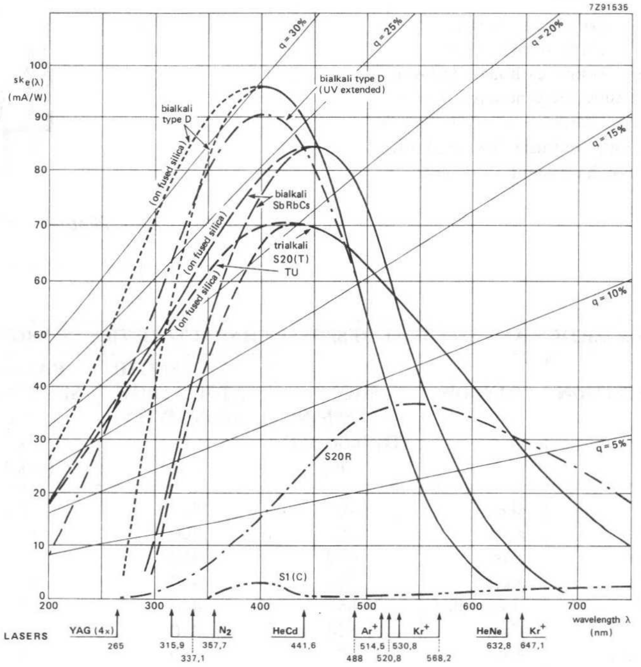

Fig.2(a) Spectral sensitivity curves of standard photocathodes, with lines of constant quantum efficiency, q, overlaid for reference. Some characteristics laser wavelengths are indicated along the wavelength axis

SENSITIVITY CHARACTERISTICS

Sensitivity can be referred to the photocathode or the anode and can be expressed in photometric units or radiometric units. Sensitivities expressed in photometric units are called luminous sensitivities; the units are amperes per lumen. Sensitivities expressed in radiometric units are called radiant sensitivities; the units are amperes per watt.

Photocathode sensitivity

Photocathode luminous sensitivity is the ratio I_k/ϕ, where I_k is the cathode photocurrent due to an incident flux ϕ measured in lumens. In the data sheets it is given under the heading *General Characteristics,* subheading *Photocathode,* and called simply *luminous sensitivity.* For most photomultipliers it is of the order of several tens of microamperes per lumen. The light with which it is measured is from a tungsten-filament lamp with a colour temperature of 2856 K. The symbol for photocathode luminous sensitivity is sk_V (formerly N_k).

A measure of cathode sensitivity that has particular relevance to scintillation counting is *cathode blue sensitivity* (also called simply *blue sensitivity* in the data sheets). This is the cathode luminous sensitivity measured with 2856 K tungsten light filtered through a Corning CS5-58 filter ground to half stock thickness. The symbol for cathode blue sensitivity is sk_F (the F standing for filtered).

Photocathode radiant sensitivity is the ratio I_k/ϕ, where ϕ is the radiant power measured in watts. Photocathode radiant sensitivity measured at a specific wavelength is called *photocathode spectral sensitivity* at that wavelength. Most of the data sheets state spectral sensitivity at one or more wavelengths and also state the wavelength at which spectral

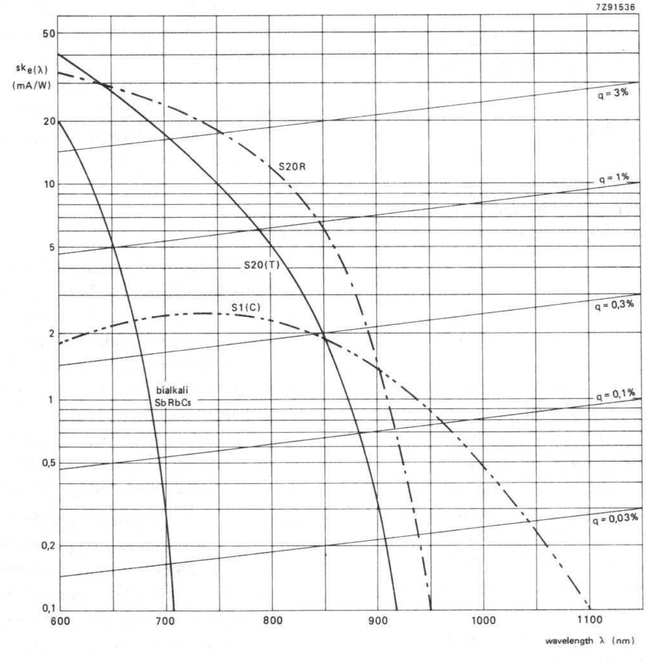

Fig.2(b) Photocathode spectral sensitivity curves in the 600 ns to 1200 nm ranged expanded on semi-logarithmic coordinates.

sensitivity is maximum. Photocathode spectral sensitivities are commonly of the order of several tens of milliamperes per watt. The symbol for photocathode spectral sensitivity is $sk_{e(\lambda)}$ (formerly N_{kr}).

Besides stating the photocathode luminous sensitivity and one or more values of spectral sensitivity, each data sheet includes a graph of the *spectral sensitivity characteristic:* the variation of spectral sensitivity with wavelength.

Another measure of photocathode sensitivity is *quantum efficiency,* which is the ratio of the number of photoelectrons emitted to the number of incident photons, usually expressed in percent. In the data sheets it is given for a specified wavelength, usually 400 nm or 440 nm, under the heading *Quick Reference Data.*

Quantum efficiency is related to spectral sensitivity by the equation

$$QE = sk_{e(\lambda)}\ \frac{h\nu}{e} = sk_{e(\lambda)}\ \frac{hc}{e\lambda}$$

where e is the electron charge, h is Planck's constant, and c is the speed of light in vacuum. Taking $hc/e = 1{,}24 \times 10^{-6}$ Wm/A,

$$QE = 124\ sk_{e(\lambda)} / \lambda$$

where $sk_{e(\lambda)}$ is expressed in milliamperes per watt and λ in nanometres. The lines of constant quantum efficiency in Fig.2 help visualize the quantum efficiency variation with wavelength of standard photocathodes.

Anode sensitivity

Anode luminous sensitivity is the ratio I_a/ϕ, where I_a is the anode current due to an incident flux ϕ on the photocathode measured in lumens. Anode luminous sensitivity is a function of the cathode luminous sensitivity and the gain, which itself is a function of the high voltage applied and the voltage divider configuration. When anode luminous sensitivity is given in the data sheets, under the heading *Typical Characteristics,* it is therefore always stated in conjunction with a specific high voltage and voltage divider configuration. It is generally of the order of several amperes per lumen to several tens of amperes per lumen. The symbol for anode luminous sensitivity is sa_v (formerly N_a).

Blue sensitivity is sometimes referred to the anode instead of the cathode and is then called *anode blue sensitivity.* It is generally of the order of several amperes per lumen; the symbol is sa_F.

Anode radiant sensitivity is the ratio I_a/ϕ, with the radiant power ϕ measured in watts. Anode radiant sensitivity measured at a specific wavelength is called *anode spectral sensitivity* at that wavelength. (In this book the terms anode radiant sensitivity and anode spectral sensitivity are in some places used interchangeably.) Anode spectral sensitivity is a function of the cathode spectral sensitivity and the gain; therefore it too is always stated in conjunction with a specific high voltage and voltage divider configuration, also under the heading *Typical Characteristics.* Anode spectral sensitivity is generally of the order of tens to hundreds of kiloamperes per watt. The symbol for it is $sa_{e(\lambda)}$ (formerly N_{ar}).

Many of the data sheets include a graph of anode spectral sensitivity as a function of applied voltage. Unless otherwise stated, the plotted sensitivity is that measured at 400 nm or at the anode or cathode sensitivity wavelength (e.g. 440 nm) mentioned in the *Quick Reference Data.*

Sensitivity characteristics measured at the anode correspond closely but not exactly to those measured at the cathode. Differences are due mainly to the different energies with which photoelectrons excited by different wavelengths are emitted by the cathode, and the different efficiencies with which they are consequently collected by the first dynode.

GAIN

The *gain* or *current amplification* of a photomultiplier is the ratio I_a/I_k, where I_a is the anode current due to a cathode photocurrent I_k. Within practical limits it varies as a power (usually >5) of the high voltage applied and depends also on how that voltage is distributed among the dynodes. When gain is given in the data sheets therefore it is always in conjunction with a specified high voltage and voltage divider configuration. Many of the data sheets also include a graph of gain as a function of applied voltage (V_{ht}, formerly V_b).

Gain and anode sensitivity graphs in the data sheets are typical for each tube type but not representative of every specimen of the type; small differences occur from tube to tube. For that reason every tube is accompanied by a certificate stating the gain or anode sensitivity measured at one or more specified voltages and with one or more voltage dividers. To find the actual gain or anode sensitivity curves for the tube, transfer the measured points to the data sheet graph and shift the published curves up or down so that they pass through the transferred points. For most tube types the published curves are straight lines on log-log paper, so this is a simple matter of redrawing the lines at the same slope through the transferred points.

Within limits gain can be adjusted by adjusting individual dynode voltages. In addition to diagrams of recommended voltage dividers, therefore, some data sheets include a graph of the effect on gain of changes in certain dynode voltage ratios.

For the same reason that sensitivity characteristics at the anode do not correspond exactly to those at the cathode, gain also varies somewhat with wavelength.

TIME CHARACTERISTICS

Signal transit time is the interval between the arrival of a delta-function light pulse at the photomultiplier window and the time at which the corresponding output pulse reaches a stated value. Signal transit time values given in the data sheets are based on the interval separating the respective maxima of the light pulse and the anode pulse. The measurement is made using light pulses with a duration <1 ns (FWHM) to simulate delta-function pulses.

Signal transit time varies as $V_{ht}^{-1/2}$ and is always stated in conjunction with a specific V_{ht} value.

Transit time also depends on the part of the photocathode from which a photoelectron originates. In the data sheets this dependence is described in terms of the *transit time difference* between pulses originating from the centre of the photocathode and from a point at a specified distance from the centre.

Transit time jitter is the variation of signal transit time from pulse to pulse when each output pulse results from the emission of a single photoelectron. In the data sheets transit time jitter is specified in terms of σ, the standard deviation of the *signal transit time distribution,* at a specified V_{ht} value.

Signal transit time distribution varies as $N_k^{-1/2}$, where N_k is the number of photoelectrons per pulse. The single-photoelectron value is therefore a worst-case value.

Anode pulse rise time, as given in the data sheets, is the 10% to 90% rise time measured using simulated delta-function (<1 ns) light pulses.

Anode pulse duration at half height (FWHM) is the interval separating the half-amplitude points of the anode current pulse in response to a simulated delta-function light pulse at the photocathode.

Time characteristics are given in the data sheets under the heading *Typical Characteristics.* Anode pulse rise time is in many cases also given in the *Quick Reference Data.*

DARK CURRENT AND NOISE

Dark current is the current measurable at the anode of a photomultiplier operating in total darkness. It comprises a d.c. component and a component consisting of very short duration (nanosecond range) random pulses ('dark pulses').

A significant part of the pulse component is due to thermionic emission of single electrons from the photocathode (see Table 2). This can be reduced by operating the tube at reduced temperature. At the lowest useful temperature the photocathode emission approaches a practical limit of about 1 electron/cm²s due at least partly to background radiation.

The number of dark pulses per second is called the *dark noise count rate* or simply *background noise.* It is more or less constant over a fairly wide range of V_{ht}; however, the amplitude of the dark pulses varies as the gain setting of the tube; that is, as a power of V_{ht}.

TABLE 2. THERMIONIC BEHAVIOUR OF COMMON PHOTOCATHODES

CATHODE TYPE		THERMIONIC EMISSION AT 20 °C (A/cm²)	TEMPERATURE RISE FOR WHICH THERMIONIC CURRENT DOUBLES (K)	LOWEST USEFUL TEMPERATURE (°C)
AgOCs	(S1)	$10^{-13} - 10^{-11}$	5 – 7	–100
SbCs	(S11)	$10^{-16} - 10^{-15}$	6 – 15	–20
SbKCs	(D)	$10^{-19} - 10^{-17}$	4 – 5	–20
SbRbCs		$10^{-19} - 10^{-16}$	5 – 10	–20
SbNaKCs	(S20)	$10^{-19} - 10^{-15}$	4	–40
SbNaKCs	(S20R)	$10^{-17} - 10^{-15}$	4	–40

The d.c. component of the dark current is due to leakage currents on the glass and insulating surfaces of the tube. It varies directly as V_{ht} and is not significantly temperature dependent. When a photomultiplier is operated at low gain or low temperature the d.c. component of the dark current is therefore the predominant one.

The data sheets do not distinguish the pulse and d.c. components of the dark current. The values given under *Quick Reference Data* and *Typical Characteristics* and in graphs are total dark current values measured with an integration time constant which is long compared with the dark pulse durations. However, a typical level of noise count rate is often given for high-gain tubes and, especially, for fast-response tubes.

Like gain or anode sensitivity graphs, dark current graphs are typical of the tube type but not representative of every specimen. Each tube is therefore accompanied by a certificate stating the dark current measured on that tube under stated conditions. The actual dark current characteristic of the tube can be found by transferring the measured value to the data sheet graph and drawing a line through it parallel to the published line.

After long stabilization the actual dark current can become several times smaller than the value stated on the test certificate.

The dark current values given are for normal operating conditions. Under other conditions other causes of dark current come into play. At very high applied voltages, for instance, dark current is likely to increase out of proportion to the gain and become unstable. This is mainly due to primary and secondary effects of field emission from the dynodes and usually subsides after the high voltage has been applied for some hours. Another cause of anomalous dark current is persistent phosphorescence of the glass following exposure of the tube to ambient light; this too subsides after a time, though if the exposure has been long or the light intense the time may be as long as 48 hours. If an application necessitates operating the tube with the anode grounded and the cathode at high negative potential, the dark current will initially be many times its normal value and may take more than half an hour to settle down. Dust and high relative humidity increase the d.c. component of the dark current, the more so when the tube is operated at lower than ambient temperature.

Dark current is always present, whether or not the tube is in total darkness; the spurious signal it provides must be taken into account in many photomultiplier applications.

SHOT NOISE

Another effect to be taken into account is shot noise: the random fluctuation of the cathode photocurrent about a mean value $\bar{I}_k$ under conditions of constant illumination. If Δf is the bandwidth of the measuring equipment connected to a photomultiplier, the mean square value of this fluctuation is

$$\overline{i_k^2} = 2\,e\bar{I}_k\Delta f$$

where e is the electron charge, $1{,}6 \times 10^{-19}$ C.

At a gain G the mean square value of the corresponding fluctuation of the anode current about its mean value $\bar{I}_a$ is

$$\overline{i_a^2} = 2\,G\,e\,\bar{I}_a\,\Delta f\left\{1 + \frac{\delta}{\delta_1(\delta - 1)}\right\}$$

and the signal-to-noise ratio at the anode is

$$\frac{S}{N} = \frac{\bar{I}_a}{i_a} = \sqrt{\frac{\bar{I}_a}{2\,G\,e\,\Delta f\left\{1 + \dfrac{\delta}{\delta_1(\delta - 1)}\right\}}}$$

The term $\delta/\delta_1(\delta - 1)$, in which δ is the average electron multiplication per stage and δ_1 the multiplication at the first dynode, takes account of additional noise due to random fluctuations in secondary emission. With typical values of $\delta_1 = 6$ and $\delta = 4$, these fluctuations decrease the signal-to-noise ratio by about 10%.

LINEARITY

As used in connection with photomultipliers, the term *linearity* refers to the direct proportionality between input illumination and output current under pulsed operating conditions. In the data sheets linearity is specified in terms of the maximum anode pulse current for which such a proportionality still applies within 2% (which is about the practical limit of accuracy with which it can be measured). The measurement is made using illumination pulses much longer (100 – 200 ns) than the pulse response of the tube; for pulses whose duration is comparable to the pulse response of the tube the linearity limit can be considerably higher than the value stated in the data sheets.

An important factor determining the linearity limit is the development of space charge in the last stages of the electron multiplier, which depends very much on the voltage division ratio there. Ratios which yield maximum linearity do not as a rule yield maximum gain, and vice versa; moreover, adjusting the ratio to raise the linearity limit generally entails a disproportionate sacrifice of gain. Under the heading *Typical*

Characteristics linearity limits are usually given for at least two V_{ht} values and voltage divider configurations, and graphs are given of the gain or anode sensitivity obtainable with those voltage dividers. With a given voltage divider the linearity limit varies approximately as V^{α}_{ht}, where α is between 2 and 3.

STABILITY

The term 'stability' refers to the constancy of anode sensitivity as a function of time, temperature, or mean anode current. Departures from stability are of two types: long-term drift under conditions of constant temperature and mean anode current; and short-term shift due to changes of temperature or mean anode current.

The 16-hour drift tests reported in the data sheets are made according to a widely recognized procedure recommended in ANSI N42.9-1972. An NaI(T1) scintillator is coupled to the photomultiplier window and a ^{137}Cs source is spaced in front of it so as to produce a count rate of about 10^4 counts per second; the tube is adjusted to give a mean anode current of about 300 nA at that count rate. After allowing the system to warm up for half-an-hour to an hour the amplitude of the ^{137}Cs 662 keV peak is recorded, and again measured and recorded every hour thereafter for 16 hours. The *mean anode sensitivity deviation,* in per cent, as reported in the data sheets is then calculated from

$$\frac{\sum_{i=1}^{17} | p - p_i |}{17p} \cdot 100$$

where p is the mean pulse amplitude averaged over the 17 readings, and p_i the amplitude of the *i*th reading.

Short-term shift due to mean anode current change is also measured according to an ANSI 42.9-1972 procedure using a ^{137}Cs source and NaI(T1) scintillator. The distance from the source to the scintillator is first adjusted to give a count rate of about 10^4 counts per second and the amplitude of the 662 keV peak is recorded. After increasing the source distance sufficiently to reduce the count rate to about 10^3 per second the amplitude of the 662 keV peak is again measured. The percentage shift reported in the data sheets is $(\Delta p/p)100$, where p is the larger of the two amplitudes and Δp the difference between them. For the measurement the photomultiplier is usually adjusted to give a mean anode current of about 1 μA at 10^4 counts per second and 0,1 μA at 10^3 counts per second.

(Nowadays, stability tests are usually performed using light-emitting diodes instead of scintillators, for convenience.)

Anode sensitivity changes are particularly troublesome in scintillation counting, for they degrade resolution by shifting the total absorption peaks. However, when the mean anode current is less then about 10 μA, as is usually the case, the anode sensitivity usually stabilizes sufficiently after 10 or 15 minutes for its long-term drift to be disregarded. Short-term shift, whether due to temperature or mean anode current changes, are usually reversible, though often with some hysteresis which may be slow to disappear.

An anode sensitivity change which is not reversible is that due to the length of time the tube has been in service. At high mean anode currents this appears to be a function of the total charge handled during the history of the tube. At a mean anode current of 30 μA, for instance, the gain of most photomultipliers will be halved after about 5000 hours of operation. At low anode currents (a few microamperes or less) the total charge handled does not appear to be relevant. Other effects, such as helium migration through the glass or internal migration and diffusion balances, then determine the end of useful life, which is measured in years and is independent of the mode of operation. Some users in fact have reported that uninterrupted low-current operation appears to result in better long-term stability of the operating characteristics than storage.

ENERGY RESOLUTION

Two energy resolution criteria commonly referred to in scintillation counting are *pulse amplitude resolution* and *peak-to-valley ratio.* Both are defined with reference to the pulse amplitude distribution curve obtained with a multi-channel pulse-height analyser for radiation of a known energy:

- pulse amplitude resolution is the ratio, expressed in percent, of the FWHM of the curve to the amplitude corresponding to its peak
- peak-to-valley ratio is the ratio of the peak value of the curve to the minimum value of the valley to the left of the peak.

Energy resolution is a characteristic of a scintillation counter as a whole, not of a photomultiplier alone; the contributions of the scintillator and the photomultiplier are not statistically independent and cannot be treated separately. In the data sheets therefore, when pulse amplitude resolutions or peak-to-valley ratios are given, under the heading *Typical Characteristics,* the particulars of the scintillator with which they were measured are also specified. The photomultiplier adjustment at which the measurements were made is also stated, usually in terms of a specified anode blue sensitivity. Radiation sources used for the measurements include ^{137}Cs (662 keV), ^{57}Co (122 keV) and ^{55}Fe (5,9 keV). At the higher energies the scintillator statistics, and at the lower energies the photomultiplier statistics, tend to be the dominant factor of energy resolution.

Operating notes

VOLTAGE SUPPLY

Gain varies as V_{ht}^{β}, where $\beta \gg 1$; a well stabilized supply is therefore essential. For, say, $\beta = 7$, which is typical for a 10-stage tube, a supply voltage variation of little more than 0,1% will cause a 1% gain variation.

The configuration of the voltage divider depends on the tube and its application. Four types of configuration are illustrated in the data sheets:

- *type A,* in which the interdynode voltages are all equal; this yields maximum gain for a given supply voltage and is particularly suitable for photometry and nuclear spectrometry applications
- *type A1,* in which, at some expense to the gain, a higher cathode/first-dynode voltage ensures good collection efficiency even at low supply voltages
- *type B,* in which the interdynode voltages increase progressively toward the anode, in some cases becoming as much as ten times as high in the last stages as in the first; gain is much lower than with type A division, but anode pulse linearity remains good up to much larger peak currents
- *type B′*, in which the interdynode voltages increase only in the last stages; with fast photomultipliers this gives good time characteristics together with satisfactory gain and pulse linearity.

Whichever type is used it must be designed so that variations of cathode illumination do not cause dynode voltage variations, otherwise non-linearities will occur. To satisfy this requirement the divider current must always be much larger than the mean anode current.

When input illumination varies continuously the relative gain variation $\Delta G/G$ due to varying illumination is roughly proportional to the ratio of the mean anode current I_a to the divider current I_p:

$$\frac{\Delta G}{G} = \frac{I_k}{I_p}\left\{\delta^n - \frac{\delta^{n+1}}{(n+1)(\delta-1)}\right\}$$

$$\approx \frac{I_a}{I_p}\left\{1 - \frac{\delta}{(n+1)(\delta-1)}\right\}$$

Here, n is the number of dynodes and δ their secondary emission coefficient. A good rule is to design for a nominal divider current I_p at least a hundred times the anticipated peak anode current $\overline{I}_a$.

> *Example.* An 8-stage photomultiplier is supplied at $V_{ht} = 1500$ V via a type B voltage divider with a progressive division ratio such that $V_{ht} = 18{,}25\ V_d$, where V_d is the basic interdynode voltage increment. The maximum anticipated mean anode current $\overline{I}_a = 10\ \mu$A; therefore assume a divider current $I_p = 100\overline{I}_a = 1$ mA. The total divider resistance is then $1500\ \text{V}/10^{-3}\ \text{A} = 1{,}5\ \text{M}\Omega$ and the incremental resistance value $1{,}5 \times 10^6/18{,}25 = 82\ \text{k}\Omega$.

The rule $I_p \geqslant 100\overline{I}_a$ is a minimum for good linearity. The maximum practical value of I_p depends on two other considerations:

- if the tube and the divider are closely coupled thermally, dissipation in the divider ($I_p{}^2R$) can increase the thermionic component of the dark current
- low divider current affords a measure of protection against accidental glare; as soon as glare increases the anode current to a level comparable with the divider current, the resulting decrease of gain automatically prevents the anode current from becoming excessive.

ZENER DIODES

Zener diodes can be substituted for some of the resistors in the divider to keep critical interdynode voltages constant.

They can be used between the first dynode and cathode to keep the collection efficiency constant regardless of supply voltage and gain setting, and between the dynodes of the first two multiplier stages to keep the gains of those stages constant. This is useful in nuclear spectrometry, where certain minimum voltages are necessary in the first stages but the overall gain need not be high. Note, however, that it cannot be done with fast-response tubes (e.g. XP2020) that incorporate an accelerating electrode internally connected to one of the higher-ranking dynodes; the potential of such an electrode must be kept in constant proportion to the voltage between the cathode and first dynode.

Zener dynodes in the last stages of the divider can stabilize the voltages there throughout a wider range of anode current variation and make it practical to design for a smaller $I_p/\bar{I}_a$ ratio than with a purely resistive divider.

In certain applications a drawback of using zener diodes is that they limit the freedom of gain adjustment. Altering the supply voltage to adjust the gain would also alter the overall voltage division ratio, for it would alter the voltages across the resistor stages but not the zener-stabilized ones. As linearity is dependent on the overall voltage distribution, a divider with zener diodes should be designed for a specific value of V_{ht} and that value should be closely adhered to. Departure from it invites the risk of over-linearity (increase of the proportionality factor between input illumination and anode current) or premature saturation (decreaese of the proportionality factor). The risk is considerably less if only the last stage is zener stabilized.

Whether zener diodes are used in the higher or lower stages of the divider, they should be shunted by resistors to protect those stages from being exposed to the full supply voltage in the event of a diode going open-circuit. The resistance values should be 2 to 3 times what they would be in a purely resistive divider.

Bear in mind that the temperature coefficients of zener diodes can cause significant variations of gain with temperature.

RESERVOIR CAPACITORS

When the input illumination is not continuous but pulsed, as in scintillation counting, design the voltage divider on the basis of the anticipated mean anode current $\bar{I}_a = I_a Nt$, where I_a is the peak amplitude of the anode pulses, N their repetition rate, and t their duration. Again, a good rule is to assume $I_p \geqslant 100\bar{I}_a$.

To supply the instantaneous current for individual pulses exceeding the mean value $\bar{I}_a$ it is now necessary to provide reservoir capacitors. These may be connected from dynode to dynode, shunting the individual divider resistors, or from each dynode to anode potential; the former arrangement is often preferable as it enables capacitors with lower voltage ratings to be used.

The capacitance required is largest between the last dynode and anode, where the pulse amplitudes are largest, and decreases from stage to stage in proportion to the gain per stage. If $q = I_a t$ is the maximum pulse charge to be delivered by the last dynode, and ΔV the maximum voltage change that can be tolerated at that dynode, the capacitance required between the last dynode and anode is $C = q/\Delta V$.

> *Example.* The anode pulses expected in a given scintillation counting application have a maximum amplitude of 1 mA and a full width at half maximum of 0,3 μs; therefore,
>
> $q = 10^{-3}\ \text{A} \times 0{,}3 \times 10^{-6}\ \text{s} = 0{,}3 \times 10^{-9}$ coulomb.
>
> If the voltage difference between the last dynode and anode is 100 V and its maximum tolerable change is 1%, the required capacitances is then
>
> $C_n = 1\ \text{V} \times 0{,}3 \times 10^{-9}\ \text{C} = 0{,}3\ \text{nF}$.
>
> Assuming a stage-to-stage gain of 3, the capacitances needed in the preceding stages are
>
> $C_{n-1} = 0{,}1\ \text{nF}$
>
> $C_{n-2} = 33\ \text{pF}$.
>
> Stages in which the capacitance required is less than about 20 pF do not require reservoir capacitors; the stage-to-stage stray capacitance is usually sufficient.

If pulses occur in bursts there may be insufficient time between individual pulses to allow the reservoir capacitances to recharge fully. The effect of successive pulses is then cumulative and dynode voltages may change appreciably between the beginning and end of a burst, even though the long-term mean anode current is substantially less than $I_p/100$. In that case, the voltage divider will have to be redesigned for a larger value of I_p.

GENERAL RECOMMENDATIONS

Never expose a photomultiplier to ambient light with the high voltage applied. As little as 10^{-5} lm is sufficient to cause the anode current to exceed its permissible limit.

To allow time for the dark current to stabilize, apply the high voltage at least half an hour before making measurements requiring any degree of accuracy. If the tube is cooled to minimize dark current, take care that no condensation can occur on the base or socket.

Take precautions against electric-shock hazards; some tubes use voltages as high as 3 kV and some power supplies can deliver more than 10 mA. If electrostatic or magnetic shields are fitted they must be kept at cathode potential. This creates an extra shock hazard when a tube is operated in negative polarity (anode earthed, cathode at high negative potential); connect the shields to the negative high voltage via a 10 MΩ safety resistor.

If you make connections direct to the pins instead of using a socket, electric weld the connections, do not solder them; soldering heat can crack the glass. Never make connections to pins marked 'i.c.' or 'n.c.' in the data sheets; they are used only during manufacture of the tube or to facilitate interchangeability of similar tubes.

Where very short pulses are to be measured, observe good high-frequency wiring practice to avoid distorting the pulse shapes. Decouple the last two dynodes by connecting their reservoir capacitors direct to the sheath of the output coaxial cable; keep the capacitor leads as short as possible to minimize stray inductance and prevent ringing.

Many tubes intended for high-frequency pulse work have integral damping resistors in the base connected to the last one or two dynodes. If the tube you are using does not, connect non-inductive 51 Ω resistors externally between the last two dynodes and their reservoir capacitors.

Always handle photomultipliers with due regard for the fact that they contain a high vacuum, glass is fragile, and the flat input window is highly stressed. Take especial care with large-diameter tubes (⩾100 mm); implosion due to breakage can be dangerous.

For maximum life and preservation of sensitivity keep photomultipliers in the dark even when they are not in use.

9-STAGE PHOTOMULTIPLIER TUBE

- 14 mm useful diameter head-on type
- Flat window
- Semi-transparent S20 type T photocathode
- For optical measurements in the entire visible spectrum; industrial applications
- Rugged construction

QUICK REFERENCE DATA

Spectral sensitivity characteristic	S20, type T
Useful diameter of the photocathode	> 14 mm
Spectral sensitivity of the photocathode at 700 nm	13 mA/W
Supply voltage for anode luminous sensitivity = 30 A/lm	1520 V
Anode pulse rise time (with voltage divider B)	≈ 3,5 ns
Linearity	
with voltage divider A (Fig. 2)	up to ≈ 10 mA
with voltage divider B (Fig. 3)	up to ≈ 30 mA

To be read in conjunction with *General Operational Recommendations Photomultiplier Tubes.*

GENERAL CHARACTERISTICS

		notes
Window		
Material	borosilicate	
Shape	plano-concave	
Refractive index at 550 nm	1,48	
Photocathode		
Semi-transparent, head-on		
Material	Sb Na K Cs	
Useful diameter	> 14 mm	
Spectral sensitivity characteristic (Fig. 6)	S20, type T	
Maximum spectral sensitivity	420 ± 30 nm	
Luminous sensitivity	typ. 140 μA/lm > 100 μA/lm	1
Spectral sensitivity at 700 nm	13 mA/W	2

Multiplier system

Number of stages	9
Dynode structure	linear focused
Dynode material	CuBe
Capacitances	
anode to final dynode	≈ 1,9 pF
anode to all	≈ 3 pF

Magnetic field

When the photocathode is uniformly illuminated the anode current is halved (at V_{ht} = 1200 V, voltage divider A) at a magnetic flux density of:

- 0,3 mT perpendicular to axis a (Fig. 1);
- 0,2 mT parallel with axis a.

It is recommended that the tube be screened from magnetic fields by a mu-metal shield protruding min. 15 mm beyond the photocathode.

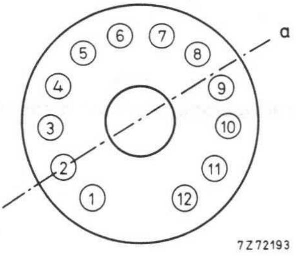

Fig. 1 Axis a with respect to base pins (bottom view).

RECOMMENDED CIRCUITS

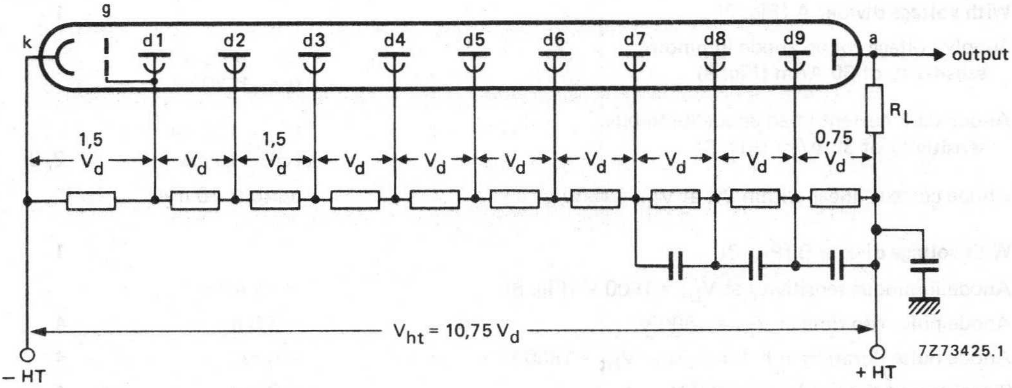

Fig. 2 Voltage divider A.

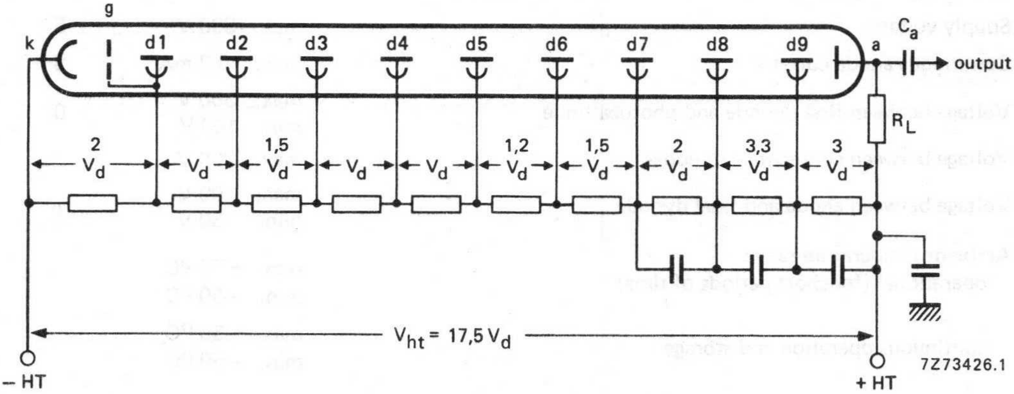

Fig. 3 Voltage divider B.

k = cathode
g = accelerating electrode
dn = dynode

a = anode
R_L = load resistor
Typical value of capacitors : 10 nF

TYPICAL CHARACTERISTICS

		notes
With voltage divider A (Fig. 2)		1
Supply voltage for an anode luminous sensitivity of 30 A/lm (Fig. 8)	$<$ 1800 V typ. 1520 V	
Anode dark current at an anode luminous sensitivity of 30 A/lm (Fig. 8)	$<$ 100 nA typ. 10 nA	2, 3
Anode current linear within 2% at V_{ht} = 1800 V	up to ≈ 10 mA	
With voltage divider B (Fig. 3)		1
Anode luminous sensitivity at V_{ht} = 1800 V (Fig. 8)	≈ 15 A/lm	
Anode pulse rise time at V_{ht} = 1800 V	≈ 3,5 ns	4
Anode pulse duration at half height at V_{ht} = 1800 V	≈ 6 ns	4
Signal transit time at V_{ht} = 1800 V	≈ 28 ns	4
Anode current linear within 2% at V_{ht} = 1800 V	up to ≈ 30 mA	

LIMITING VALUES (Absolute maximum rating system)

Supply voltage	max. 1900 V	5
Continuous anode current	max. 0,2 mA	8
Voltage between first dynode and photocathode	max. 350 V min. 100 V	6
Voltage between consecutive dynodes	max. 200 V	
Voltage between anode and final dynode	max. 300 V min. 30 V	7
Ambient temperature range operational (for short periods of time)	max. + 70 °C min. −50 °C	
continuous operation and storage	max. + 50 °C min. −50 °C	

Notes

1. To obtain a peak pulse current greater than that obtainable with divider A, it is necessary to increase the inter-dynode voltage of the stages progressively. Divider circuit B is an example of a "progressive" divider, giving a compromise between gain, speed, and linearity. Other dividers can be conceived to achieve other compromises. It is generally recommended that the voltage difference between one stage and the next is less than a factor of 2.
2. Wherever possible, the power supply should be arranged so that the cathode is earthed and the anode is at + HT, however, it is sometimes necessary to supply the tube with the anode earthed and the cathode at −HT. Under these circumstances, erratic noise and dark current are generally increased and unstable, particularly after application of voltage. The glass envelope of the tube should be supported only by insulators with an insulation resistance of $> 10^{15}\,\Omega$.
3. Dark current is measured at ambient temperature, after the tube has been in darkness for approx. 15 min.
4. Measured with a pulsed light source, with a pulse duration (FWHM) of < 1 ns; the cathode being completely illuminated. The rise time is determined between 10% and 90% of the amplitude of the anode pulse. The signal transit time is measured between the instant at which the illuminating pulse at the cathode becomes maximum, and the instant at which the anode pulse attains its maximum. Rise time, pulse duration and transit time vary as a function of high tension supply voltage V_{ht}, approximately as $V_{ht}^{-1/2}$.
5. Total HT supply voltage, or the voltage at which the tube has an anode sensitivity of 500 A/lm whichever is lower.
6. Minimum value to obtain good collection in the input optics.
7. When calculating the anode voltage the voltage drop across the load resistor should be taken into account.
8. A value of $< 10\ \mu$A is recommended for applications requiring good stability.

MECHANICAL DATA

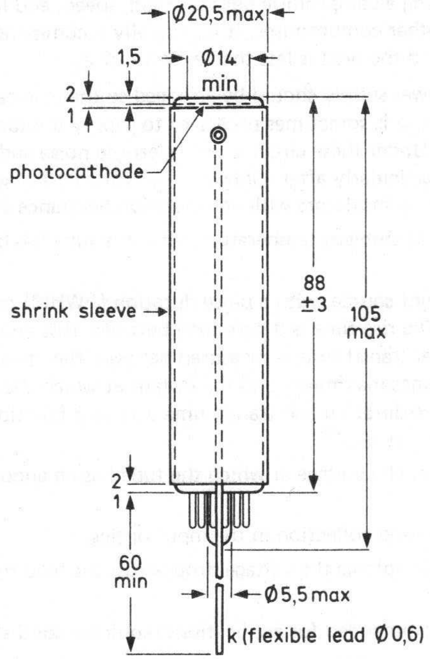

Fig. 4.

PIN CONNECTIONS

Base	12-pin all-glass
Net mass	25 g

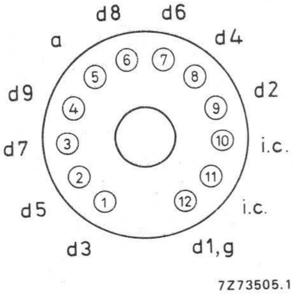

Fig. 5.

ACCESSORIES

Socket: type FE1004

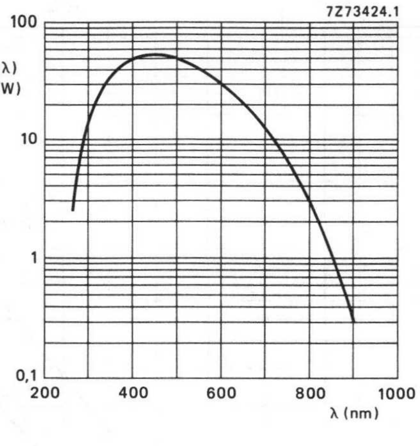

Fig. 6 Spectral sensitivity characteristic.

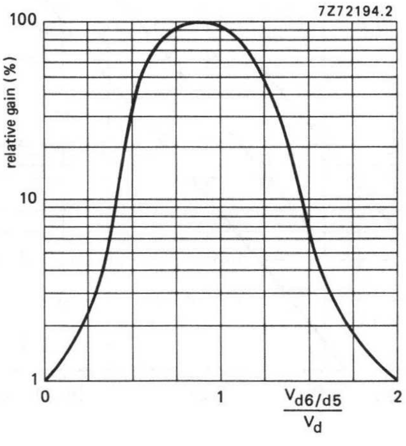

Fig. 7 Relative gain as a function of the voltage between d6 and d5, normalized to V_d; $V_{d7/d5}$ constant.

Note: Gain regulation by changing the voltage between d6 and d5 may cause a degradation of other parameters such as stability and linearity.

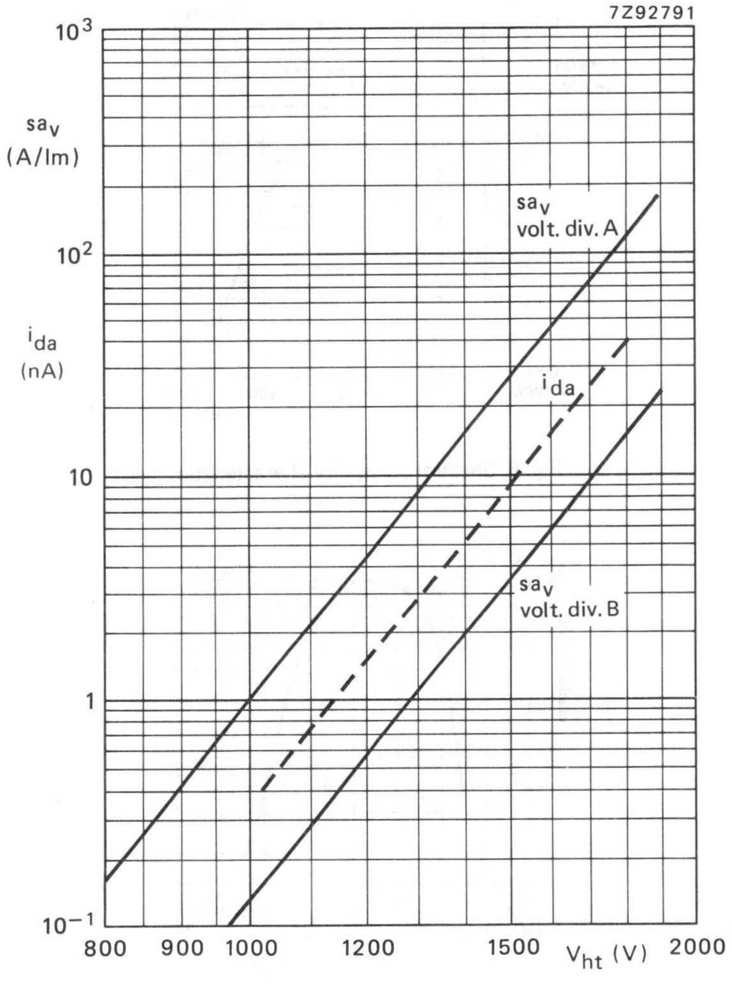

Fig. 8.

Anode luminous sensitivity, sa_V, and anode dark current, i_{da}, as a function of supply voltage V_{ht}.

10-STAGE PHOTOMULTIPLIER TUBE

- 14 mm useful diameter head-on type
- Flat window
- Semi-transparent bi-alkaline type D photocathode
- For high-energy physics, scintillation counting under limited dimensional conditions.

QUICK REFERENCE DATA

Spectral sensitivity characteristic	type D
Useful diameter of the photocathode	> 14 mm
Cathode blue sensitivity	10 μA/lmF
Supply voltage for anode blue sensitivity = 10 A/lmF	1200 V
Anode pulse rise time (with voltage divider B)	≈ 2,4 ns
Linearity	
with voltage divider A (Fig. 2)	≈ 20 mA
with voltage divider B (Fig. 3)	≈ 80 mA

To be read in conjunction with *General Operational Recommendations Photomultiplier Tubes.*

GENERAL CHARACTERISTICS

Window

Material	lime glass
Shape	plano-concave
Refractive index at 400 nm	1,54

Photocathode (note 2)

Semi-transparent, head-on

Material	Sb K Cs		←
Useful diameter	> 14 mm		
Spectral sensitivity characteristic (Fig. 5)	type D		
Maximum spectral sensitivity	400 ± 30 nm		←
Luminous sensitivity	≈ 85 μA/lm	note 3	
Blue sensitivity	typ. 10 μA/lmF		
	> 8,0 μA/lmF	note 1	
Spectral sensitivity at 400 nm	≈ 80 mA/W	note 4	←

Multiplier system

Number of stages	10
Dynode structure	linear focused
Dynode material	CuBe
Capacitances	
anode to final dynode	≈ 2 pF
anode to all	≈ 4 pF

Magnetic field

When the photocathode is uniformly illuminated the anode current is halved (at V_{ht} = 1200 V, voltage divider A) at a magnetic flux density of:
- 0,3 mT perpendicular to axis a (Fig. 1);
- 0,2 mT parallel with axis a.

It is recommended that the tube be screened from magnetic fields by a mu-metal shield protruding min. 15 mm beyond the photocathode.

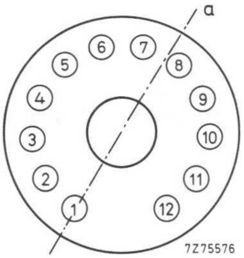

Fig. 1 Axis a with respect to base pins (bottom view).

RECOMMENDED CIRCUITS

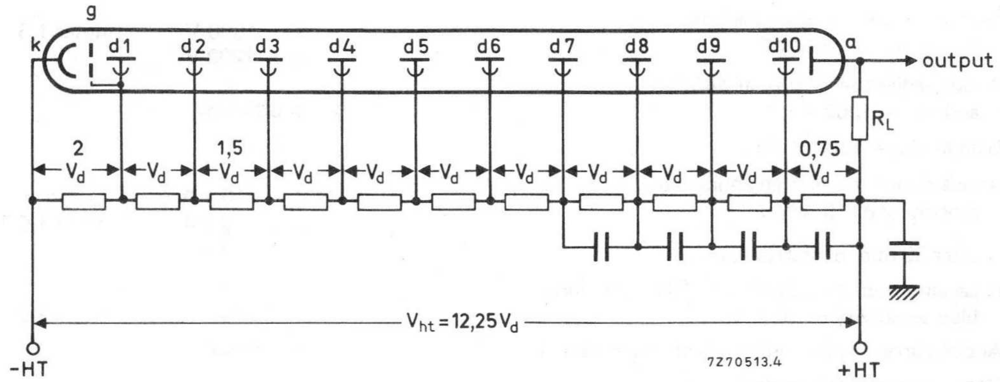

Fig. 2 Voltage divider A. Typical values of capacitors: 10 nF; k = cathode; g = accelerating electrode; dn = dynode no.; a = anode; R_L = load resistor.

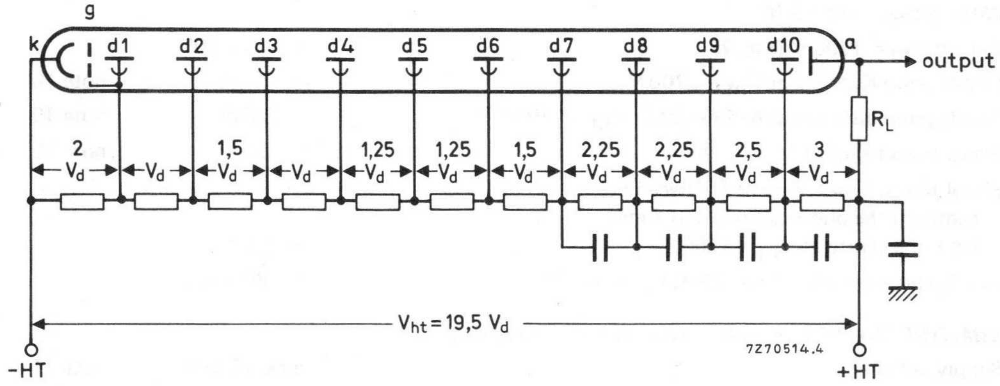

Fig. 3 Voltage divider B. Typical values of capacitors: 10 nF; k = cathode; g = accelerating electrode; dn = dynode no.; a = anode; R_L = load resistor.

TYPICAL CHARACTERISTICS

With voltage divider A (Fig. 2)

Supply voltage for an anode blue sensitivity of 10 A/lmF	$<$ 1500 V typ. 1200 V	notes 1,5
Anode radiant sensitivity at 440 nm and V_{ht} = 1200 V	$\approx$ 80 kA/W	
Gain at V_{ht} = 1200 V (Fig. 7)	$\approx 1 \times 10^6$	
Anode dark current at an anode blue sensitivity of 10 A/lmF	$<$ 10 nA typ. 2 nA	notes 1,6,7
after 30 min. of stabilization	$\approx$ 0,3 nA	
Pulse amplitude resolution for ^{137}Cs at an anode blue sensitivity of 10 A/lmF	$\approx$ 7,5 %	notes 1,8
Anode current linear within 2% at V_{ht} = 1500 V	up to $\approx$ 20 mA	
Mean anode sensitivity deviation		
long term (16 h)	$\approx$ 1,5 %	note 9
after change of count rate	$\approx$ 1,5 %	
Anode pulse rise time at V_{ht} = 1500 V	$\approx$ 2,3 ns	note 10
Anode pulse duration at half height at V_{ht} = 1500 V	$\approx$ 3,5 ns	note 10
Signal transit time at V_{ht} = 1500 V	$\approx$ 22 ns	note 10

With voltage divider B (Fig. 3)

Gain at V_{ht} = 1700 V (Fig. 7)	$\approx 4,5 \times 10^6$	
Anode pulse rise time at V_{ht} = 1700 V	$\approx$ 2,4 ns	note 10
Anode pulse duration at half height at V_{ht} = 1700 V	$\approx$ 3,8 ns	note 10
Signal transit time at V_{ht} = 1700 V	$\approx$ 22 ns	note 10
Signal transit time difference between the centre of the photocathode and 7 mm from the centre at V_{ht} = 1700 V	$\approx$ 1,5 ns	
Anode current linear within 2% at V_{ht} = 1700 V	up to $\approx$ 80 mA	

LIMITING VALUES (Absolute maximum rating system)

Supply voltage	max. 1900 V	note 11
Continuous anode current	max. 0,2 mA	note 12
Voltage between first dynode and photocathode	max. 350 V min. 100 V	note 13
Voltage between consecutive dynodes	max. 250 V	
Voltage between anode and final dynode	max. 300 V min. 30 V	note 14
Ambient temperature range		
operational (for short periods of time)	max. +80 °C min. −30 °C	
continuous operation and storage	max. +50 °C min. −30 °C	

Notes

1. Blue sensitivity, expressed in μA/lmF, is measured with a tungsten filament lamp with a colour temperature of 2856 ± 5K. Light is transmitted through a blue filter (Corning CS no. 5-58, polished to half stock thickness).
2. The bialkaline photocathode has a significant resistance which increases rapidly with reducing temperature. It is therefore recommended that it should not be exposed to light of too great an intensity; the cathode current should be limited, for example, to 1 nA at room temperature or 0,1 nA at −30 °C. If too high a photocurrent is passed, the cathode can no longer be considered an equipotential surface, and the focusing of electrons onto the first dynode will be affected, resulting in departure from linearity. In applications with short pulse times the photocathode is able to deliver pulses containing 10^6 to 10^7 photoelectrons without disturbance.
3. Luminous sensitivity is measured with a tungsten filament lamp with a colour temperature of 2856 ± 5K.
4. Spectral sensitivity is measured with a tungsten filament lamp with a colour temperature of 2856 ± 5K. Light is transmitted through an interferential filter. Spectral sensitivity at 400 nm, expressed in A/W, can be estimated by multiplying the blue sensitivity, expressed in A/lmF, by 8×10^3 for this type of tube. ←
5. To obtain a peak pulse current greater than that obtainable with divider A, it is necessary to increase the inter-dynode voltage of the stages progressively. Divider circuit B is an example of a "progressive" divider, giving a compromise between gain, speed, and linearity. Other dividers can be conceived to achieve other compromises. It is generally recommended that the voltage difference between one stage and the next is less than a factor of 2.
6. Wherever possible, the power supply should be arranged so that the cathode is earthed and the anode is at + HT, however, it is sometimes necessary to supply the tube with the anode earthed and the cathode at −HT. Under these circumstances, erratic noise and dark current are generally increased and unstable, particularly after application of voltage. The glass envelope of the tube should be supported only by insulators with an insulation resistance of $> 10^{15}$ ohm.
7. Dark current is measured at ambient temperature, after the tube has been in darkness for approx. 1 min. Lower values can be obtained after a longer stabilization period in darkness (approx. 30 min).
8. Pulse amplitude resolution for ^{137}Cs is measured with an NaI(Tl) cylindrical scintillator (Quartz et Silice serial no. 1118 or equivalent) with a diameter of 12 mm and a height of 12 mm. The count rate used is $\approx 10^4$ c/s.
9. The mean pulse amplitude deviation is measured by coupling an NaI(Tl) scintillator to the window of the tube. Long term (16 h) deviation is measured by placing a ^{137}Cs source at a distance from the scintillator such that the count rate is $\approx 10^4$ c/s corresponding to an anode current of ≈ 300 nA.

   Mean pulse amplitude deviation after change of count rate is measured with a ^{137}Cs source at a distance of the scintillator such that the count rate can be changed from 10^4 c/s to 10^3 c/s corresponding to an anode current of ≈ 1 μA and $\approx 0{,}1$ μA respectively.
   Both tests are carried out according to ANSI–N42–9–1972 of IEEE recommendations.
10. Measured with a pulsed light source, with a pulse duration (FWHM) of < 1 ns; the cathode being completely illuminated. The rise time is determined between 10% and 90% of the amplitude of the anode pulse. The signal transit time is measured between the instant at which the illuminating pulse at the cathode becomes maximum, and the instant at which the anode pulse attains its maximum. Rise time, pulse duration and transit time vary as a function of high tension supply voltage V_{ht}, approximately as $V_{ht}^{-1/2}$.
11. Total HT supply voltage, or the voltage at which the tube has a gain of 1×10^7, whichever is lower.
12. A value of < 10 μA is recommended for applications requiring high stability.
13. Minimum value to obtain good collection in the input optics.
14. When calculating the anode voltage the voltage drop across the load resistor should be taken into account.

MECHANICAL DATA

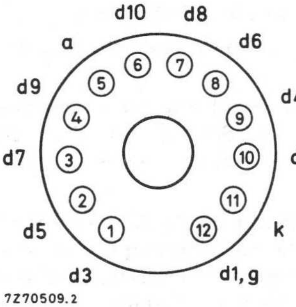

Pin positions equal to those of tubes XP1910 and PM1911.

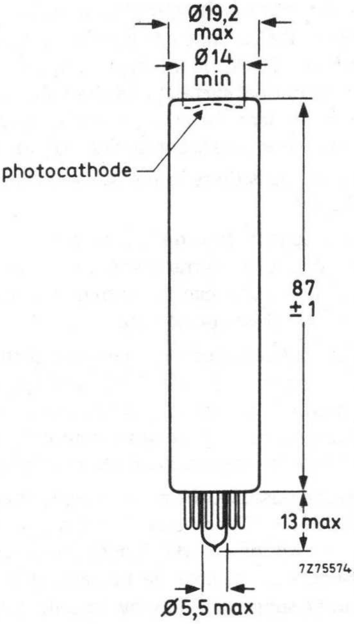

Fig. 4.

Base	12-pin all glass
Net mass	21 g

ACCESSORIES

Socket	type FE1004

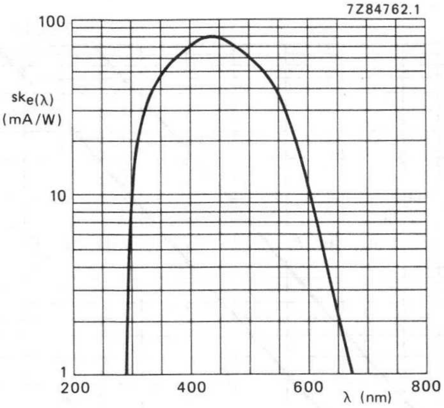

Fig. 5 Spectral sensitivity characteristic.

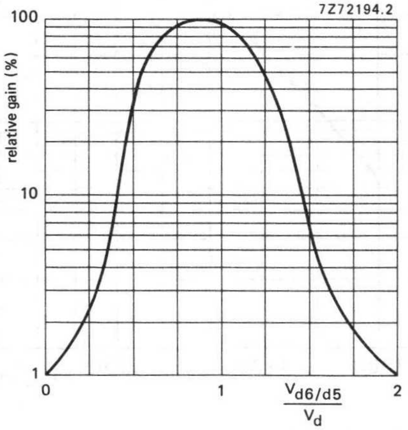

Fig. 6 Relative gain as a function of the voltage between d6 and d5, normalized to V_d; $V_{d7/d5}$ constant.

Note: Gain regulation by changing the voltage between d6 and d5 may cause a degradation of other parameters such as stability and linearity.

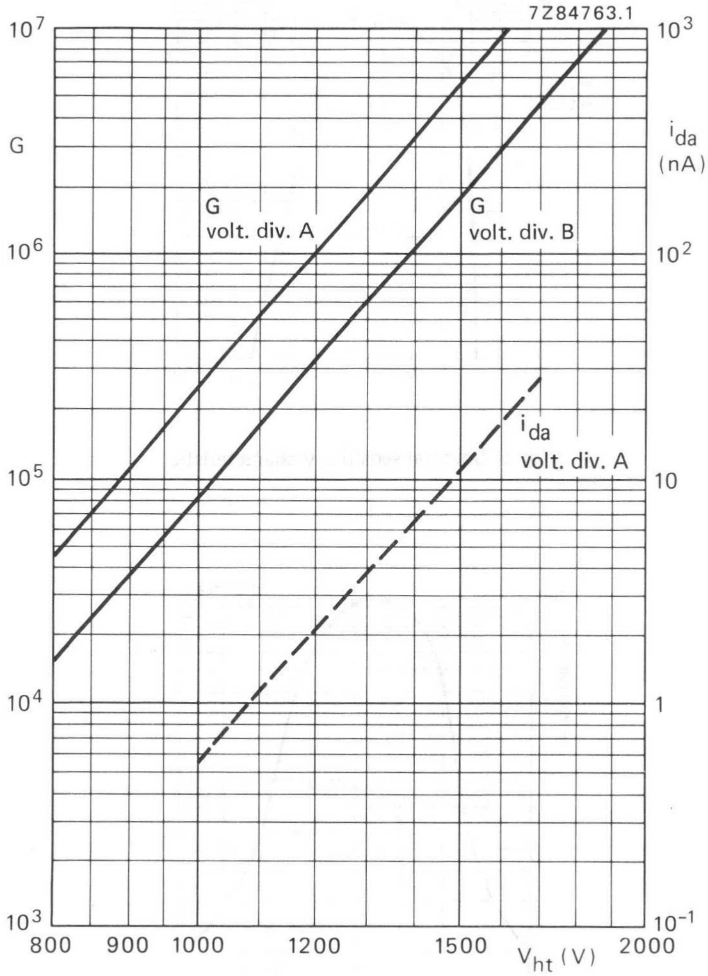

Fig. 7 Gain G and anode dark current i_{da} as a function of the supply voltage V_{ht}. i_{da} is given as a dotted line to indicate its principle behaviour only.

10-STAGE PHOTOMULTIPLIER TUBE

- 14 mm useful diameter head-on type
- Flat window
- Semi-transparent bi-alkaline Sb Rb Cs photocathode deposited on a fused silica window
- For high-energy physics and positron scanners
- Time of flight applications with BaF_2 scintillators under limited dimensional conditions

QUICK REFERENCE DATA

Spectral sensitivity characteristic	Sb Rb Cs on fused silica
Useful diameter of the photocathode	> 14 mm
Cathode blue sensitivity	10 μA/lmF
Supply voltage for anode blue sensitivity = 10 A/lmF	1250 V
Anode pulse rise time (with voltage divider B)	≈ 3 ns
Linearity	
with voltage divider A (Fig. 2)	≈ 20 mA
with voltage divider B (Fig. 3)	≈ 80 mA

To be read in conjunction with *General Operational Recommendations Photomultiplier Tubes.*

GENERAL CHARACTERISTICS*

Window

Material	fused silica
Shape	plano-plano
Refractive index at 400 nm	1,47
at 250 nm	1,50

Photocathode (note 2)

Semi-transparent, head-on		
Material	Sb Rb Cs	
Useful diameter	> 14 mm	
Spectral sensitivity characteristic	see Fig. 5	
Maximum spectral sensitivity	440 ± 30 nm	
Luminous sensitivity	≈ 85 μA/lm	note 3
Blue sensitivity	typ. 10 μA/lmF > 8,0 μA/lmF	note 1
Spectral sensitivity at 440 nm	≈ 80 mA/W	note 4

---

* Notes are given on page 5.

Multiplier system

Number of stages	10
Dynode structure	linear focused
Dynode material	CuBe
Capacitances	
anode to final dynode	≈ 2 pF
anode to all	≈ 4 pF

Magnetic field

When the photocathode is uniformly illuminated the anode current is halved (at $V_{ht} = 1200$ V, voltage divider A) at a magnetic flux density of:
- 0,3 mT perpendicular to axis a (Fig. 1);
- 0,2 mT parallel with axis a.

It is recommended that the tube be screened from magnetic fields by a mu-metal shield protruding min. 15 mm beyond the photocathode.

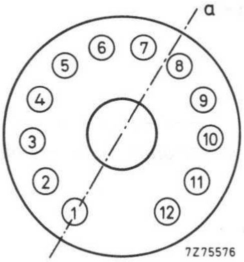

Fig. 1 Axis a with respect to base pins (bottom view).

RECOMMENDED CIRCUITS

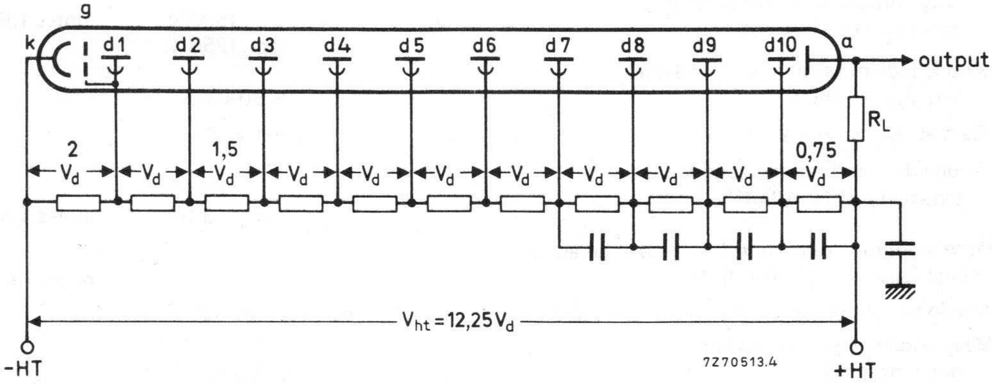

Fig. 2 Voltage divider A. Typical values of capacitors: 10 nF; k = cathode; g = accelerating electrode; dn = dynode no.; a = anode; R_L = load resistor.

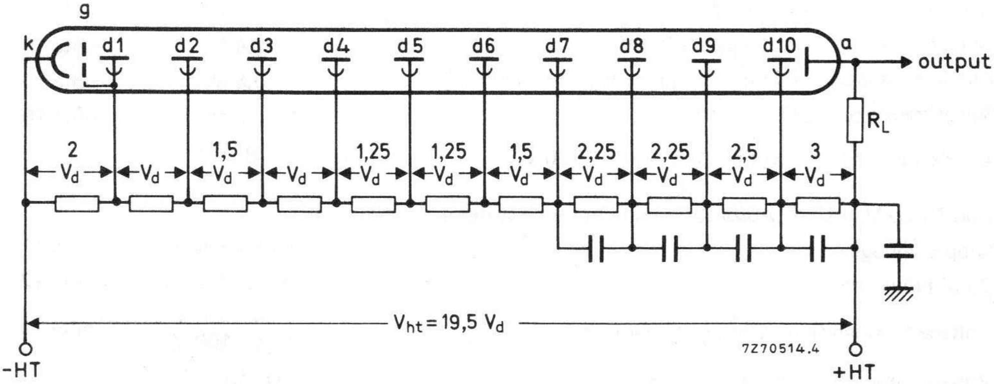

Fig. 3 Voltage divider B. Typical values of capacitors: 10 nF; k = cathode; g = accelerating electrode; dn = dynode no.; a = anode; R_L = load resistor.

TYPICAL CHARACTERISTICS

With voltage divider A (Fig. 2)

Supply voltage for an anode blue sensitivity of 10 A/lmF	< 1500 V typ. 1250 V	notes 1,5
Anode radiant sensitivity at 440 nm and V_{ht} = 1250 V	≈ 80 kA/W	
Gain at V_{ht} = 1250 V (Fig. 7)	≈ 1×10^6	
Anode dark current at an anode blue sensitivity of 10 A/lmF	< 25 nA typ. 3 nA	notes 1,6,7
Pulse amplitude resolution for ^{137}Cs at an anode blue sensitivity of 10 A/lmF	≈ 7,5 %	notes 1,8
Anode current linear within 2% at V_{ht} = 1500 V	up to ≈ 20 mA	
Mean anode sensitivity deviation long term (16 h) after change of count rate	 ≈ 1,5 % ≈ 1,5 %	note 9
Anode pulse rise time at V_{ht} = 1500 V	≈ 3 ns	note 10
Anode pulse duration at half height at V_{ht} = 1500 V	≈ 5 ns	note 10
Signal transit time at V_{ht} = 1500 V	≈ 22 ns	note 10

With voltage divider B (Fig. 3)

Gain at V_{ht} = 1700 V (Fig. 7)	≈ 3×10^6	
Anode pulse rise time at V_{ht} = 1700 V	≈ 2,4 ns	note 10
Anode pulse duration at half height at V_{ht} = 1700 V	≈ 3,8 ns	note 10
Signal transit time at V_{ht} = 1700 V	≈ 23 ns	note 10
Anode current linear within 2% at V_{ht} = 1700 V	up to ≈ 80 mA	

LIMITING VALUES (Absolute maximum rating system)

Supply voltage	max. 1900 V	note 11
Continuous anode current	max. 0,2 mA	note 12
Voltage between first dynode and photocathode	max. 350 V min. 100 V	note 13
Voltage between consecutive dynodes	max. 250 V	
Voltage between anode and final dynode	max. 300 V min. 30 V	note 14
Ambient temperature range operational (for short periods of time)	max. +80 °C min. −30 °C	
continuous operation and storage	max. +50 °C min. −30 °C	

* Notes are given on page 5.

Notes

1. Blue sensitivity, expressed in µA/lmF, is measured with a tungsten filament lamp with a colour temperature of 2856 ± 5K. Light is transmitted through a blue filter (Corning CS no. 5-58, polished to half stock thickness).
2. The bialkaline photocathode has a significant resistance which increases rapidly with reducing temperature. It is therefore recommended that it should not be exposed to light of too great an intensity; the cathode current should be limited, for example, to 1 nA at room temperature or 0,1 nA at −30 °C. If too high a photocurrent is passed, the cathode can no longer be considered an equipotential surface, and the focusing of electrons onto the first dynode will be affected, resulting in departure from linearity. In applications with short pulse times the photocathode is able to deliver pulses containing 10^6 to 10^7 photoelectrons without disturbance.
3. Luminous sensitivity is measured with a tungsten filament lamp with a colour temperature of 2856 ± 5K.
4. Spectral sensitivity is measured with a tungsten filament lamp with a colour temperature of 2856 ± 5K. Light is transmitted through an interferential filter. Spectral sensitivity at 440 nm, expressed in A/W, can be estimated by multiplying the blue sensitivity, expressed in A/lmF, by 8×10^3 for this type of tube.
5. To obtain a peak pulse current greater than that obtainable with divider A, it is necessary to increase the inter-dynode voltage of the stages progressively. Divider circuit B is an example of a "progressive" divider, giving a compromise between gain, speed, and linearity. Other dividers can be conceived to achieve other compromises. It is generally recommended that the voltage difference between one stage and the next is less than a factor of 2.
6. Wherever possible, the power supply should be arranged so that the cathode is earthed and the anode is at + HT, however, it is sometimes necessary to supply the tube with the anode earthed and the cathode at −HT. Under these circumstances, erratic noise and dark current are generally increased and unstable, particularly after application of voltage. The glass envelope of the tube should be supported only by insulators with an insulation resistance of $> 10^{15}$ ohm.
7. Dark current is measured at ambient temperature, after the tube has been in darkness for approx. 1 min. Lower values can be obtained after a longer stabilization period in darkness (approx. 30 min).
8. Pulse amplitude resolution for ^{137}Cs is measured with an NaI(Tl) cylindrical scintillator (Quartz et Silice serial no. 1118 or equivalent) with a diameter of 12 mm and a height of 12 mm. The count rate used is $\approx 10^4$ c/s.
9. The mean pulse amplitude deviation is measured by coupling an NaI(Tl) scintillator to the window of the tube. Long term (16 h) deviation is measured by placing a ^{137}Cs source at a distance from the scintillator such that the count rate is $\approx 10^4$ c/s corresponding to an anode current of ≈ 300 nA.

   Mean pulse amplitude deviation after change of count rate is measured with a ^{137}Cs source at a distance of the scintillator such that the count rate can be changed from 10^4 c/s to 10^3 c/s corresponding to an anode current of ≈ 1 µA and $\approx 0,1$ µA respectively.
   Both tests are carried out according to ANSI–N42–9–1972 of IEEE recommendations.
10. Measured with a pulsed light source, with a pulse duration (FWHM) of < 1 ns; the cathode being completely illuminated. The rise time is determined between 10% and 90% of the amplitude of the anode pulse. The signal transit time is measured between the instant at which the illuminating pulse at the cathode becomes maximum, and the instant at which the anode pulse attains its maximum. Rise time, pulse duration and transit time vary as a function of high tension supply voltage V_{ht}, approximately as $V_{ht}^{-1/2}$.
11. Total HT supply voltage, or the voltage at which the tube has a gain of 1×10^7, whichever is lower.
12. A value of < 10 µA is recommended for applications requiring high stability.
13. Minimum value to obtain good collection in the input optics.
14. When calculating the anode voltage the voltage drop across the load resistor should be taken into account.

MECHANICAL DATA

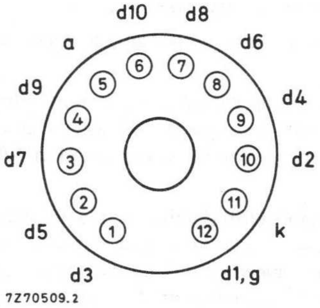

Pin positions equal to XP1911.

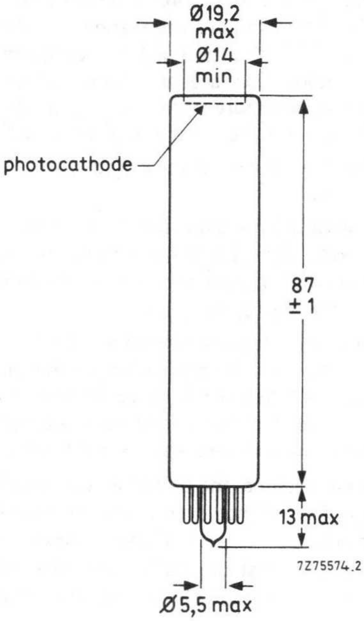

Fig. 4.

Base	12-pin all glass
Net mass	21 g

ACCESSORIES

Socket	type FE1004

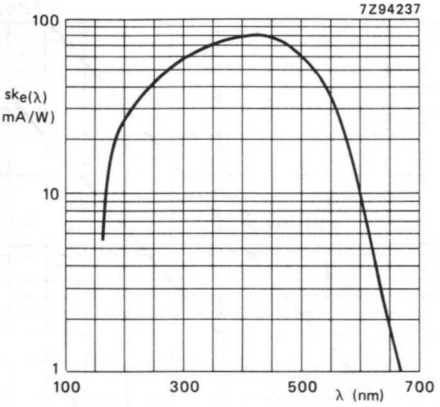

Fig. 5 Spectral sensitivity characteristic.

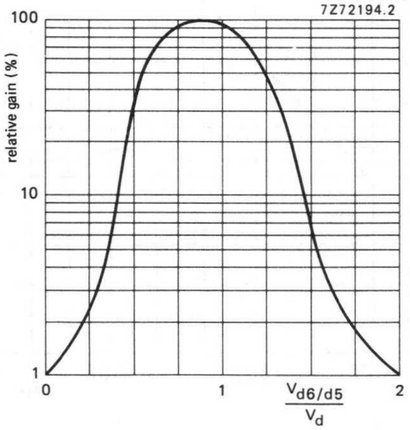

Fig. 6 Relative gain as a function of the voltage between d6 and d5, normalized to V_d; $V_{d7/d5}$ constant.

Note: Gain regulation by changing the voltage between d6 and d5 may cause a degradation of other parameters such as stability and linearity.

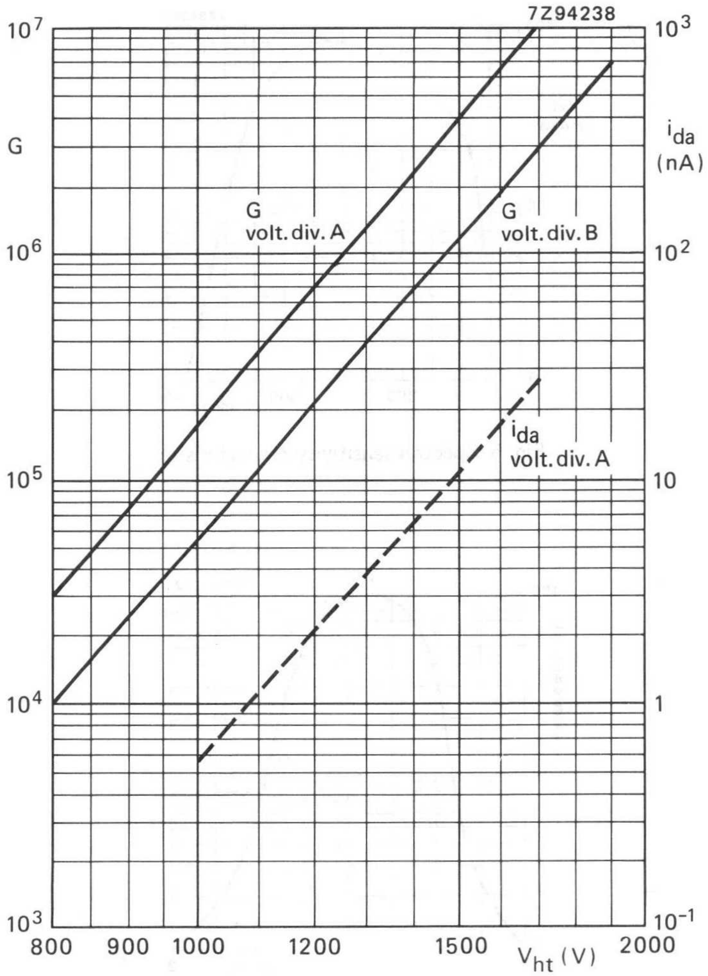

Fig. 7 Gain G and anode dark current i_{da} as a function of the supply voltage V_{ht}. i_{da} is given as a dotted line to indicate its principle behaviour only.

being replaced by XP2071, XP2071B
in preparation for green sensitivity applications: XP2081, XP2081B

10-STAGE PHOTOMULTIPLIER TUBE

- 32 mm useful diameter head-on type
- flat window
- semi-transparent bi-alkaline photocathode
- high stability
- good linearity
- for high-energy physics experiments, scintillation counting, laboratory and industrial photometry
- XP2011B has a 12-pin plastic base; XP2011 has a 14-pin all-glass base

QUICK REFERENCE DATA

Spectral sensitivity characteristic		Fig. 6		
Useful diameter of the photocathode		>	32	mm
Cathode blue sensitivity			11	μA/lmF
Supply voltage for anode blue sensitivity = 7,5 A/lmF			1300	V
Pulse amplitude resolution for ^{137}Cs		≈	7,2	%
Pulse amplitude resolution for ^{55}Fe		≈	43	%
Mean anode sensitivity deviation		≈	1	%
Anode pulse rise time		≈	2,5	ns
Linearity (with voltage divider B)	up to	≈	200	mA

To be read in conjunction with *General Operational Recommendations Photomultiplier Tubes.*

GENERAL CHARACTERISTICS

Window

Material	lime glass			
Shape	plano-plano			
Refractive index at 400 nm		1,54		

Photocathode

Semi-transparent, head-on

Material	SbRbCs			
Useful diameter	>	32	mm	
Spectral sensitivity characteristic	see Fig. 6			
Maximum spectral sensitivity		440 ± 30	nm	
Luminous sensitivity		110	μA/lm	2
Blue sensitivity	typ. >	11 8,5	μA/lmF μA/lmF	1
Spectral sensitivity at 440 nm	≈	85	mA/W	3

Electron optical input system

This system consists of: the photocathode (k), a metallized part of the glass envelope, internally connected to the photocathode and the accelerating electrode (g), internally connected to d1.

Multiplier system

Number of stages		10
Dynode structure		linear focused
Dynode material		CuBe
Capacitances		
anode to final dynode	≈	3 pF
anode to all	≈	5 pF

Magnetic field

When the photocathode is uniformly illuminated the anode current is halved (at V_{ht} = 1200 V, voltage divider A) at a magnetic flux density of:

- 0,6 mT in the direction of the longitudinal axis;
- 0,35 mT perpendicular to axis a (see Fig. 1);
- 0,15 mT parallel with axis a.

It is recommended that the tube be screened from magnetic fields by a mu-metal shield protruding > 15 mm beyond the photocathode.

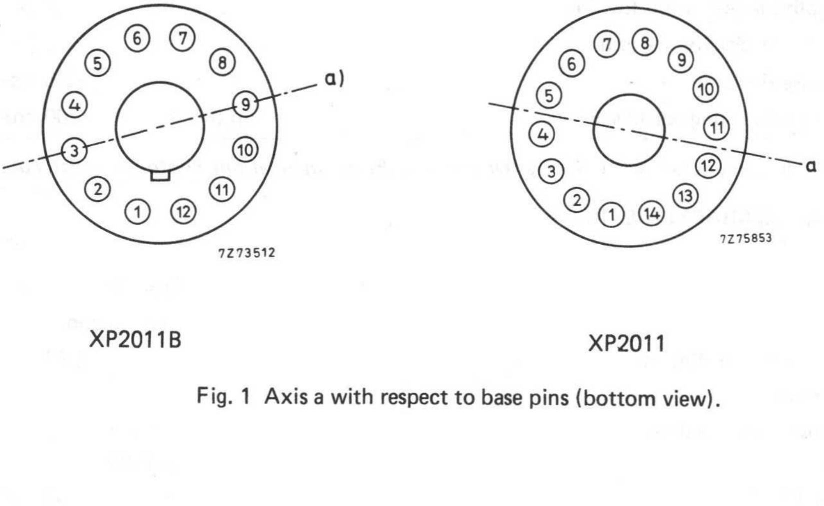

XP2011B

XP2011

Fig. 1 Axis a with respect to base pins (bottom view).

RECOMMENDED CIRCUITS

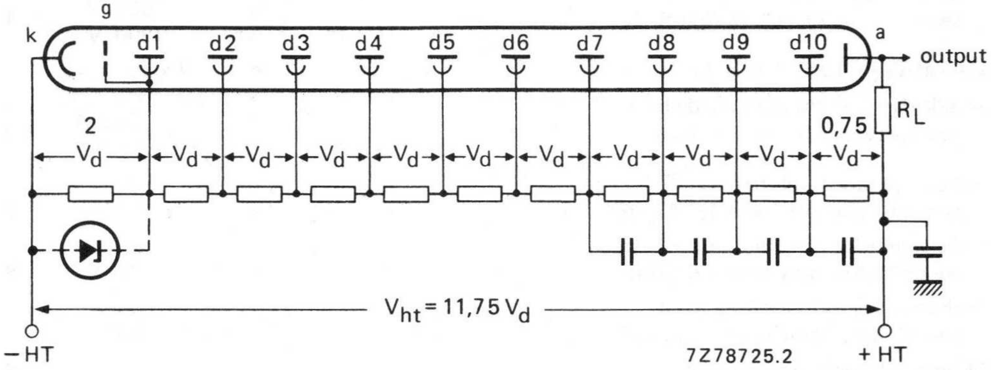

Fig. 2 Voltage divider A*.

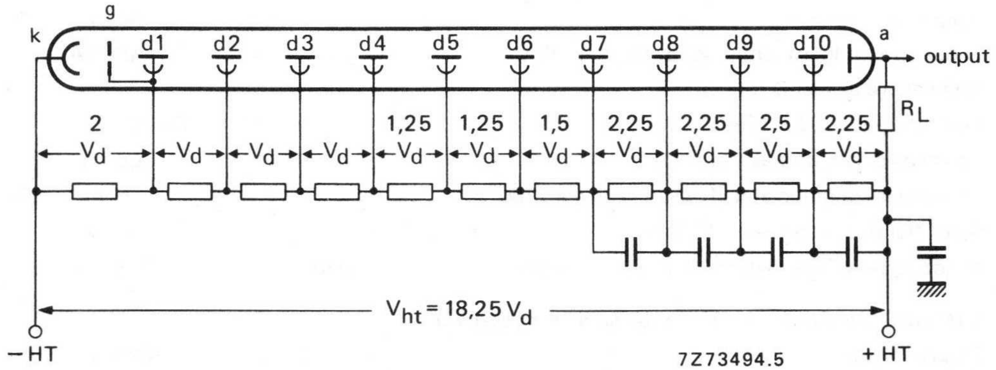

Fig. 3 Voltage divider B.

Typical values of capacitors: 10 nF

k = cathode;
g = accelerating electrode;
dn = dynode no.;
a = anode;
R_L = load resistor.

---

* For optimum peak amplitude resolution it is recommended that the voltage between first dynode and photocathode be maintained at ≈ 200 V e.g. by means of a voltage regulator diode.

TYPICAL CHARACTERISTICS

					notes
With voltage divider A (Fig. 2)					4
Supply voltage for an anode blue sensitivity of 7,5 A/lmF (Fig. 8)		< typ.	1600 1300	V V	1
Gain at V_{ht} = 1300 V (Fig. 9)		≈	7×10^5		
Anode dark current at an anode blue sensitivity of 7,5 A/lmF (Fig. 8)		< typ.	20 1,5	nA nA	5,6
Pulse amplitude resolution for ^{137}Cs at an anode blue sensitivity of 1,5 A/lmF		≈	7,2	%	7
Pulse amplitude resolution for ^{55}Fe at an anode blue sensitivity of 7,5 A/lmF		≈	43	%	8
Peak-to-valley ratio for ^{55}Fe at an anode blue sensitivity of 7,5 A/lmF		≈	34		
Mean anode sensitivity deviation					9
long term (16 h)		≈	1	%	
after change of count rate		≈	1	%	
Anode pulse rise time at V_{ht} = 1300 V		≈	2,5	ns	10
Anode pulse duration at half height at V_{ht} = 1300 V		≈	6	ns	10
Signal transit time at V_{ht} = 1300 V		≈	30	ns	10
Anode current linear within 2% at V_{ht} = 1300 V	up to	≈	40	mA	
With voltage divider B (Fig. 3)					4
Gain at V_{ht} = 1700 V (Fig. 9)		≈	7×10^5		
Anode pulse rise time at V_{ht} = 1700 V		≈	2,5	ns	10
Anode pulse duration at half height at V_{ht} = 1700 V		≈	6	ns	10
Signal transit time at V_{ht} = 1700 V		≈	26	ns	10
Anode current linear within 2% at V_{ht} = 1700 V	up to	≈	200	mA	

LIMITING VALUES (Absolute maximum rating system)

Supply voltage	max.	1800	V	11
Continuous anode current	max.	0,2	mA	12
Voltage between first dynode and photocathode	max. min.	500 150	V V	13
Voltage between consecutive dynodes	max.	300	V	
Voltage between anode and final dynode	max. min.	300 30	V V	14
Ambient temperature range				
Operational (for short periods of time)	max. min.	+80 −30	°C °C	15
Continuous operating and storage	max. min.	+50 −30	°C °C	

NOTES

1. Blue sensitivity, expressed in µA/lmF, is measured with a tungsten filament lamp with a colour temperature of 2856 ± 5K. Light is transmitted through a blue filter (Corning CS no. 5-58, polished to half stock thickness).
2. Luminous sensitivity is measured with a tungsten filament lamp with a colour temperature of 2856 ± 5 K.
3. Spectral sensitivity is measured with a tungsten filament lamp with a colour temperature of 2856 ± 5K. Light is transmitted through an interferential filter. Spectral sensitivity at 440 nm, expressed in A/W, can be estimated by multiplying the blue sensitivity, expressed in A/lmF, by $7{,}7 \times 10^3$ for this type of tube.
4. To obtain a peak pulse current greater than that obtainable with divider A, it is necessary to increase the inter-dynode, voltage of the stages progressively. Divider circuit B is an example of a "progressive" divider, giving a compromise between gain, speed, and linearity. Other dividers can be conceived to achieve other compromises. It is generally recommended that the increase in voltage between one stage and the next be kept less than a factor of 2.
5. Wherever possible, the power supply should be arranged so that the cathode is earthed and the anode is at +HT, however, it is sometimes necessary to supply the tube with the anode earthed and the cathode at −HT. Under these circumstances, erratic noise and dark current are generally increased and unstable, particularly immediately after application of voltage. The glass envelope of the tube should be supported only by insulators with an insulation resistance of $> 10^{15}\,\Omega$.
6. Dark current is measured at ambient temperature, after the tube has been in darkness for approx. 1 min. Lower values can be obtained after a longer stabilization period in darkness (approx. 30 min).
7. Pulse amplitude resolution for ^{137}Cs is measured with an NaI (Tl) cylindrical scintillator (Quartz et Silice serial no. 2470 or equivalent) with a diameter of 32 mm and a height of 32 mm. The count rate used is $\approx 10^4$ c/s.
8. Pulse amplitude resolution for ^{55}Fe is measured with an NaI (Tl) cylindrical scintillator with a diameter of 25 mm and a height of 1 mm provided with a beryllium window. The count rate used is $\approx 2 \times 10^3$ c/s.
9. The mean anode sensitivity deviation is measured by coupling an NaI (Tl) scintillator to the window of the tube. Long term (16 h) deviation is measured by placing a ^{137}Cs source at a distance from the scintillator such that the count rate is $\approx 10^4$ c/s corresponding to an average anode current of ≈ 300 nA.
   Anode sensitivity deviation after change of count rate is measured with a ^{137}Cs source at a distance of the scintillator such that the count rate can be changed from 10^4 c/s to 10^3 c/s corresponding to an average anode current of ≈ 1 µA and ≈ 0,1 µA respectively.
   Both tests are carried out according to ANSI–N42–9–1972 of IEEE recommendations.
10. Measured with a pulsed-light source, with a pulse duration (FWHM) of < 1 ns, the cathode being completely illuminated. The rise time is determined between 10% and 90% of the amplitude of the anode pulse. The signal transit time is measured between the instant at which the illuminating pulse at the cathode becomes maximum, and the instant at which the anode pulse attains its maximum. Rise time, pulse duration and transit time vary as a function of high tension supply voltage V_{ht}, approximately as $V_{ht}^{-1/2}$.
11. Total HT supply voltage or the voltage at which the tube has an anode blue sensitivity of 75 A/lmF (voltage given on test certificate for an anode blue sensitivity of 7,5 A/lmF, multiplied by 1,4), whichever is lower.
12. A value of < 10 µA is recommended for applications requiring good stability.
13. Minimum value to obtain good collection in the input optics.

NOTES (continued)

14. When calculating the anode voltage the voltage drop across the load resistor should be taken into account.
15. For type XP2011B this range of temperatures is limited principally by stresses in the sealing layer of the base to the glass bulb. Where low temperature operation is contemplated, the supplier should be consulted.

MECHANICAL DATA

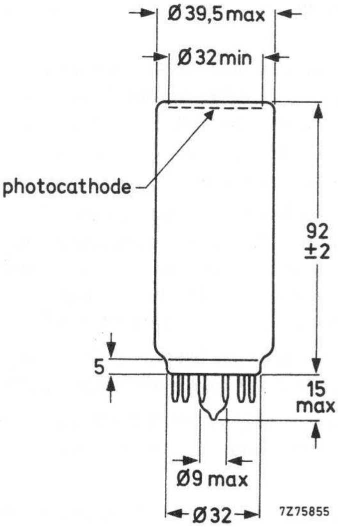

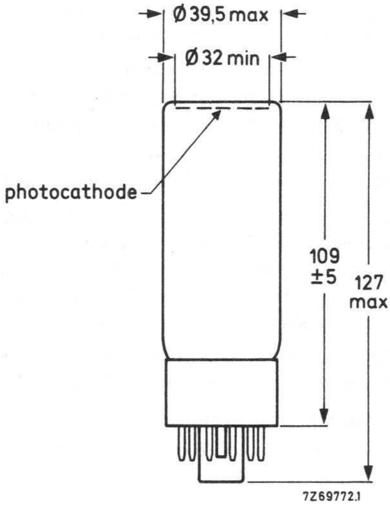

Base	14-pin all glass
Net mass	54 g

Base	12-pin (JEDEC B12-43)
Net mass	72 g

PIN CONNECTIONS

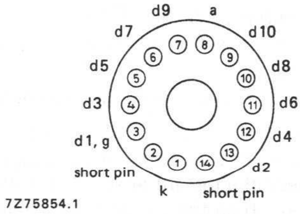

Fig. 4 XP2011.

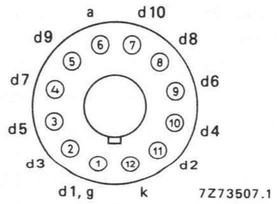

Fig. 5 XP2011B.

ACCESSORIES

Socket:
for XP2011 : FE1112
for XP2011B : FE1012

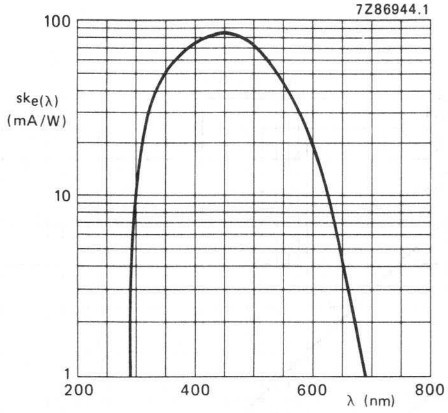

Fig. 6 Spectral sensitivity characteristic.

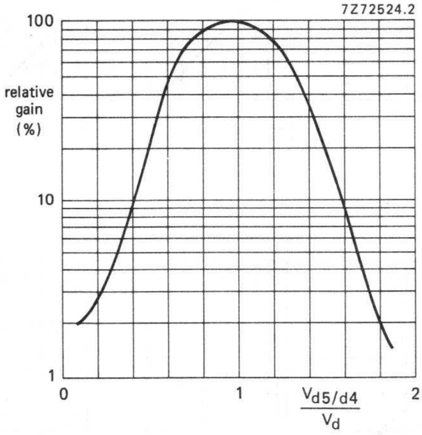

Fig. 7 Relative gain as a function of the voltage between d5 and d4, normalized to V_d; $V_{d6/d4}$ constant.

Note: Gain regulation by changing the voltage between d5 and d4 may cause a degradation of other parameters such as stability and linearity.

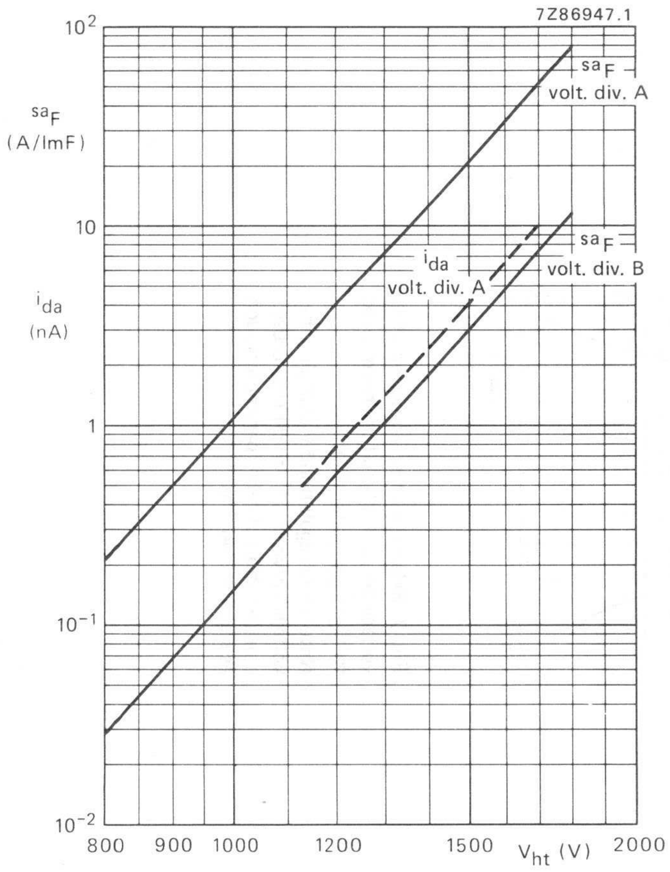

Fig. 8 Anode blue sensitivity, sa_F, and anode dark current i_{da}, as a function of supply voltage V_{ht}; i_{da} is given as a dotted line to indicate its principle behaviour only.

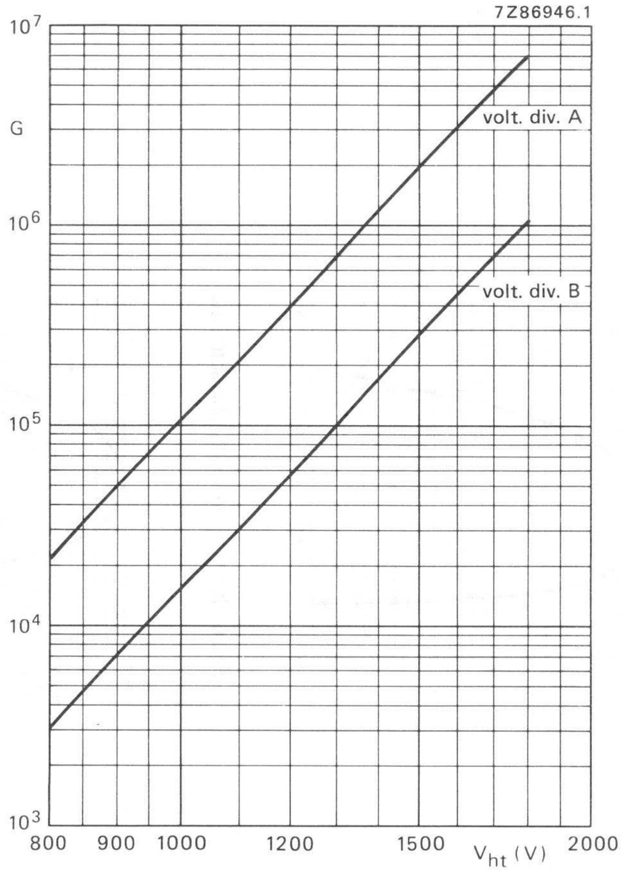

Fig. 9 Gain G as a function of supply voltage V_{ht}.

replaced by XP2072, XP2072B

10-STAGE PHOTOMULTIPLIER TUBES

The XP2012 and XP2012B are 32 mm useful diameter head-on photomultiplier tubes with a flat window and a semitransparent bialkaline type D photocathode. The tubes are intended for use in X-ray and γ-spectrometry and for all applications requiring a low background noise and/or dark current. Their Cu-Be dynode system offers a high stability. The XP2012 has a 14-pin all-glass base; the XP2012B is provided with a 12-pin plastic base.

QUICK REFERENCE DATA

Spectral sensitivity characteristic		type D		
Useful diameter of the photocathode		>	32	mm
Spectral sensitivity of the photocathode at 400 nm			90	mA/W
Supply voltage for an anode spectral sensitivity = 60 kA/W			1350	V
Pulse amplitude resolution				
for ^{57}Co at sa_V = 10 kA/W		≈	11,2	%
for ^{55}Fe at sa_V = 60 kA/W		≈	42	%
Peak-to-valley ratio for ^{55}Fe at sa_V = 60 kA/W		≈	34	
Anode pulse rise time (with voltage divider B)		≈	2,5	ns
Mean anode sensitivity deviation		≈	1	%
Linearity				
with voltage divider A	up to	≈	100	mA
with voltage divider B	up to	≈	200	mA

To be read in conjunction with *General Operational Recommendations Photomultiplier Tubes.*

GENERAL CHARACTERISTICS

Window

Shape	plano-plano		
Material	lime glass		
Refractive index at 400 nm		1,54	

Photocathode (note 1)

Semi-transparant, head-on	SbKCs		
Useful diameter	>	32	mm
Spectral sensitivity characteristic (Fig. 6)	type D		
Maximum sensitivity at		400 ± 30	nm
Spectral sensitivity at 400 nm	typ. >	90 60	mA/W mA/W

Multiplier system

Number of stages		10
Dynode structure	linear focused	
Dynode material	Cu Be	
Capacitances		
Anode to all	≈	5 pF
Anode to final dynode	≈	3 pF

Magnetic field

When the photocathode is illuminated uniformly the anode current is halved (at V_{ht} = 1200 V, voltage divider A):

- at a magnetic flux density of 0,6 mT in the direction of the longitudinal axis;
- at a magnetic flux density of 0,35 mT perpendicular to axis a (see Fig.1);
- at a magnetic flux density of 0,15 mT parallel to axis a.

It is recommended that the tube be screened against the influence of magnetic fields by a mu-metal shield protruding > 15 mm beyond the photocathode.

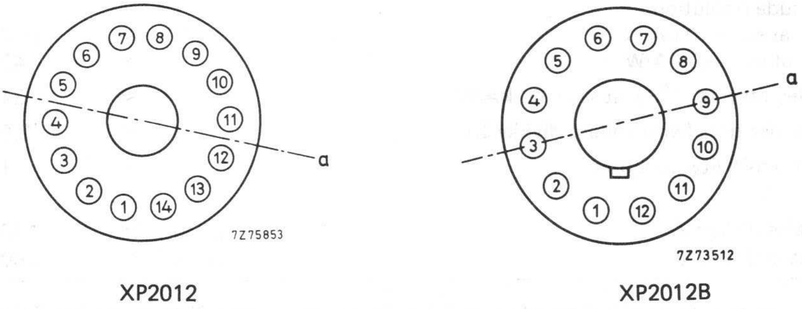

XP2012 XP2012B

Fig. 1 Axis a with respect to base pins (bottom view).

RECOMMENDED CIRCUITS

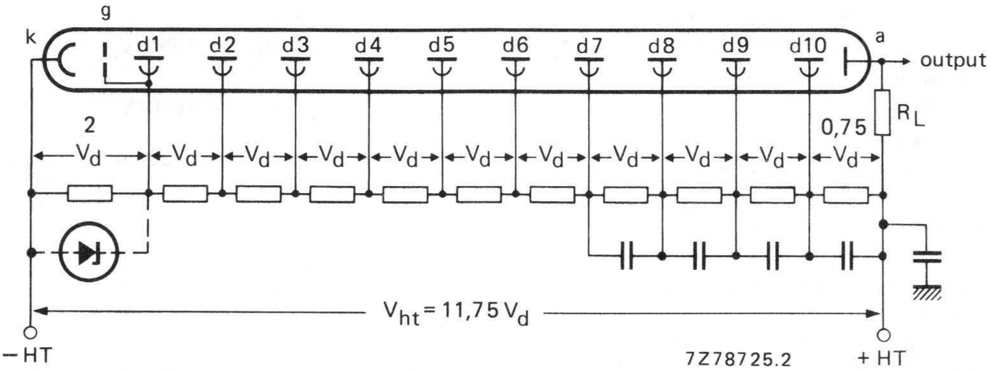

Fig. 2 Voltage divider A.

For optimum peak amplitude resolution it is recommended that the voltage between the first dynode and the photocathode be maintained at ≈ 200 V, e.g. by means of a voltage regulator diode.

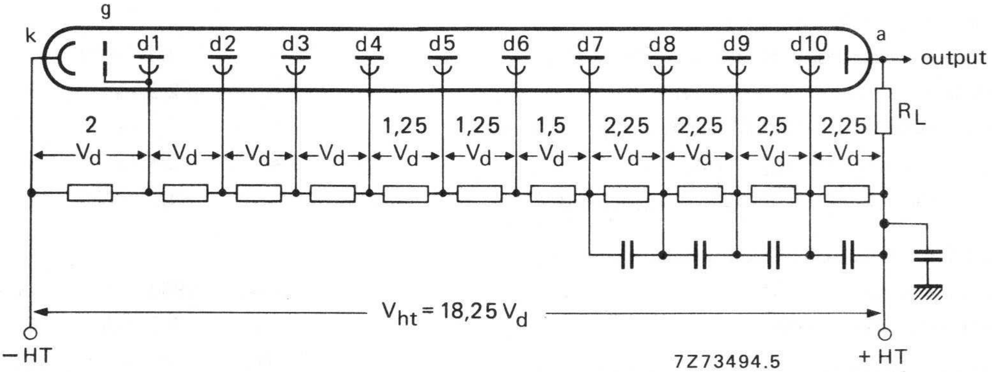

Fig. 3 Voltage divider B.

k = cathode
g = accelerating electrode
dn = dynode no
a = anode
R_L = load resistor

Typical values of capacitors: 10 nF

TYPICAL CHARACTERISTICS *

					notes
With voltage divider A (Fig. 2)					2
Supply voltage for an anode spectral sensitivity of 60 kA/W (Fig. 8)		$<$ typ.	1600 1350	V V	
for an anode spectral sensitivity of 300 kA/W (Fig. 8)		≈	1650	V	
Anode dark current at an anode spectral sensitivity of 60 kA/W (Fig. 8)		$<$ typ.	20 1	nA nA	3,4
Pulse amplitude resolution for ^{137}Cs at $sa_{e(\lambda)}$ = 10 kA/W		≈	7,2	%	5
Pulse amplitude resolution for ^{57}Co at $sa_{e(\lambda)}$ = 10 kA/W		≈	11,2	%	5
Pulse amplitude resolution for ^{55}Fe at $sa_{e(\lambda)}$ = 60 kA/W		≈	42	%	6
Peak-to-valley ratio for ^{55}Fe at $sa_{e(\lambda)}$ = 60 kA/W		≈	34		6
Anode current linear within 2% at V_{ht} = 1700 V	up to	≈	100	mA	
Mean anode sensitivity deviation					13
long term (16 h)		≈	1	%	
after change of count rate		≈	1	%	
versus temperature between 0 and + 40 °C at 450 nm		≈	0,2	%/K	
With voltage divider B (Fig. 2)					2
Anode spectral sensitivity at V_{ht} = 1700 V (Fig. 8)		≈	50	kA/W	
Anode pulse rise time at V_{ht} = 1700 V		≈	2,5	ns	7
Anode pulse duration at half-height at V_{ht} = 1700 V		≈	6	ns	7
Signal transit time at V_{ht} = 1700 V		≈	26	ns	7
Anode current linear within 2% at V_{ht} = 1700 V	up to	≈	200	mA	

LIMITING VALUES (Absolute maximum rating system)

Supply voltage	max.	1800	V	8
Continuous anode current	max.	0,2	mA	9
Voltage between first dynode and photocathode	max. min.	500 150	V V	10
Voltage between consecutive dynodes	max.	300	V	
Voltage between anode and final dynode	max. min.	300 30	V V	11
Ambient temperature range				
Operational (for short periods of time)	max. min.	+80 −30	°C °C	12
Continuous operation and storage	max. min.	+50 −30	°C °C	

---

* All spectral sensitivities refer to a wavelength of 400 nm.

Notes

1. The bialkaline photocathode has a significant resistance which increases rapidly with reducing temperature. It is thus recommended that it should not be subjected to light of too great an intensity; the cathode current should be limited, for example, to 1 nA at room temperature or 0,1 nA at −30 °C. If too high a photocurrent is passed, the cathode can no longer be considered to be an equipotential surface, and the focusing of electrons onto the first dynode will be affected, resulting in departures of linearity.
2. To obtain a peak pulse current greater than that obtainable with divider A, it is necessary to increase the inter-dynode voltage of the stages progressively. Divider circuit B is an example of a "progressive" divider, giving a compromise between gain, speed, and linearity. Other dividers can be conceived to achieve other compromises. It is generally recommended that the increase in voltage between one stage and the next be kept less than a factor of 2.
3. Wherever possible, the photomultiplier power supply should be arranged so that the cathode is earthed and the anode is at +HT, however, it is sometimes necessary to supply the tube with the anode earthed and the cathode at −HT. Under these circumstances, erratic noise and dark current are generally increased and unstable, particularly immediately after application of voltage. The glass envelope of the tube should be supported only by insulators having an insulation resistance of $> 10^{15}\ \Omega$.
4. Dark current is measured at ambient temperature, after a stabilization period of the tube in darkness (≈ ¼ h).
5. Pulse amplitude resolution for ^{137}Cs and ^{57}Co is measured with an NaI (Tl) cylindrical scintillator with a diameter of 32 mm and a height of 32 mm. The count rate used is ≈ 10^3 c/s.
6. Pulse amplitude resolution for ^{55}Fe is measured with an NaI (Tl) cylindrical scintillator with a diameter of 25 mm and a height of 1 mm provided with a beryllium window. The count rate used is 2 x 10^3 c/s.
7. Measured with a pulsed-light source, with a pulse duration (FWHM) of < 1 ns, the cathode being completely illuminated. The rise time is determined between 10% and 90% of the amplitude of the anode pulse. The signal transit time is measured between the instant at which the illuminating pulse at the cathode becomes maximum, and the instant at which the anode pulse attains its maximum. Rise time, pulse duration and transit time vary as a function of high tension supply voltage V_{ht}, approximately as $V_{ht}^{-1/2}$.
8. Total HT supply voltage or the voltage at which the tube has an anode spectral sensitivity of 600 kA/W, whichever is lower.
9. A value of < 10 μA is recommended for applications requiring high stability.
10. Minimum value to obtain good collection in the input optics.
11. When calculating the anode voltage the voltage drop across the load resistor should be taken into account.
12. For type XP2012B this range of temperatures is limited principally by stresses in the sealing layer of the base to the glass bulb.
13. The mean pulse amplitude deviation is measured by coupling an NaI (Tl) scintillator to the window of the tube. Long term (16 h) deviation is measured by placing a ^{137}Cs source at a distance from the scintillator such that the count rate is ≈ 10^4 c/s corresponding to an anode current of ≈ 300 nA.
    Mean pulse amplitude deviation after change of count rate is measured with a ^{137}Cs source at a distance of the scintillator such that the count rate can be changed from 10^4 c/s to 10^3 c/s corresponding to an anode current of ≈ 1 μA and ≈ 0,1 μA respectively.
    Both tests are carried out according to ANSI−N42−9−1972 of IEEE recommendations.

MECHANICAL DATA

Dimensions in mm

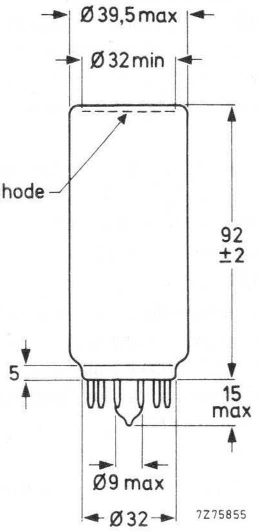

Fig. 4 XP2012

Base: 14-pin all-glass
Net mass: 54 g

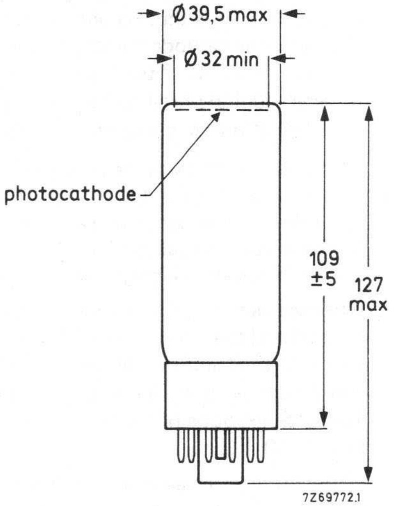

XP2012B

Base: 12-pin (JEDEC B12-43)
Net mass: 72 g

PIN CONNECTIONS

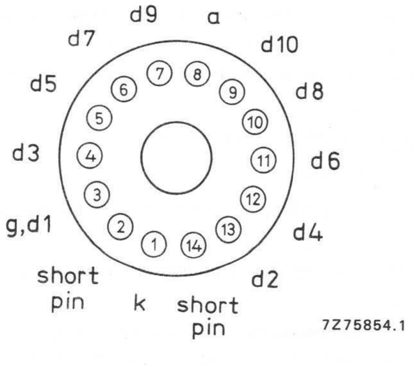

XP2012

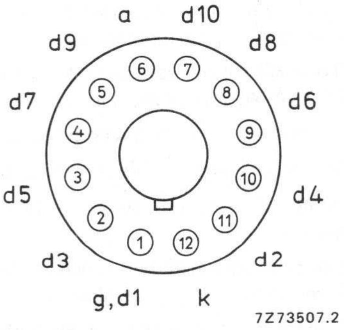

XP2012B

ACCESSORIES

Socket:
for XP2012 type FE1112
for XP2012B type FE1012

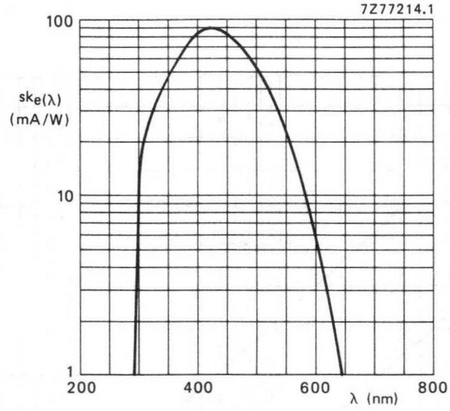

Fig. 6 Spectral sensitivity characteristic.

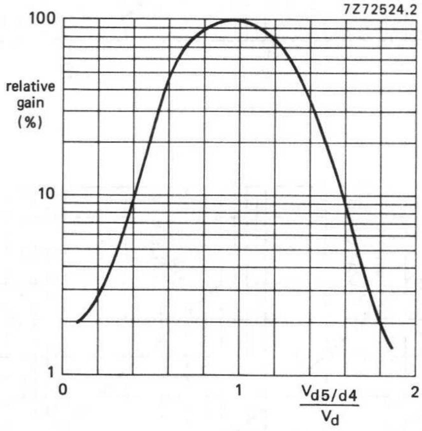

Fig. 7 Relative gain as a function of the voltage between d5 and d4, normalized to V_d; $V_{d6/d4}$ constant.

Note: Gain regulation by changing the voltage between d5 and d4 may cause a degradation of other parameters such as stability and linearity.

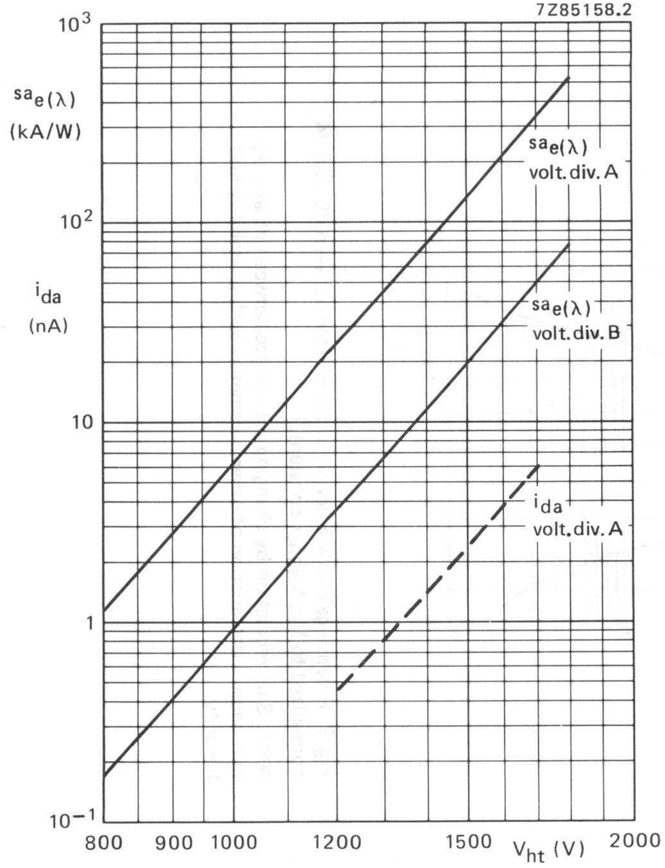

Fig. 8 Anode spectral sensitivity, $sa_{e(\lambda)}$, and anode dark current, i_{da}, as a function of supply voltage V_{ht}.

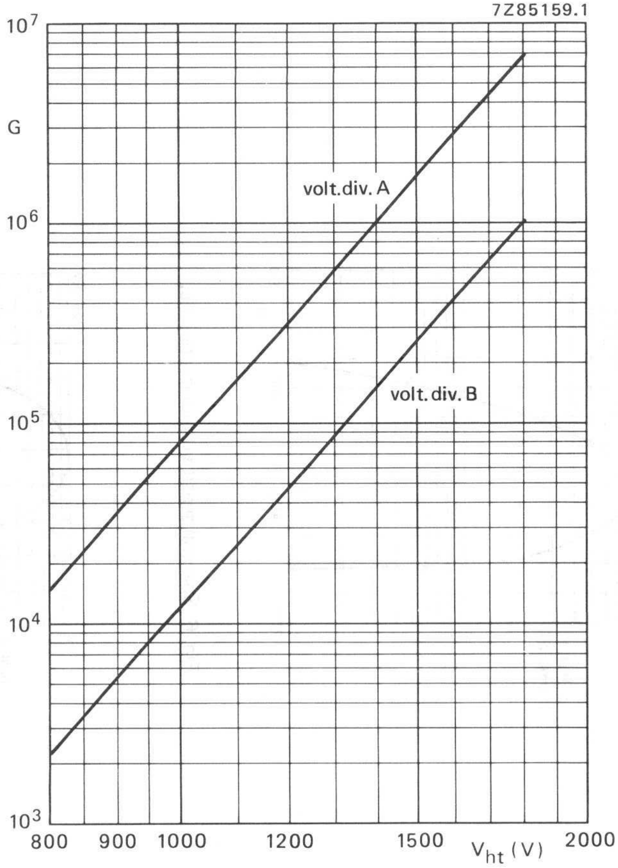

Fig. 9 Gain G as a function of supply voltage V_{ht}.

replaces XP1017

10-STAGE PHOTOMULTIPLIER TUBE

- 34 mm useful diameter head-on type
- Flat window
- Semi-transparent tri-alkaline S20R extended red photocathode
- For the red and near-infrared part of the spectrum

QUICK REFERENCE DATA

Spectral sensitivity characteristic			type S20R	
Useful diameter of the photocathode		>	34	mm
Spectral sensitivity of the photocathode				
at 550 nm		≈	35	mA/W
at 700 nm		≈	23	mA/W
at 860 nm			6,5	mA/W
Supply voltage for anode luminous sensitivity = 60 A/lm			1200	V
Anode pulse rise time (with voltage divider B)		≈	2,5	ns
Linearity				
with voltage divider A	up to	≈	50	mA
with voltage divider B	up to	≈	200	mA

To be read in conjunction with *General Operational Recommendations Photomultiplier Tubes.*

GENERAL CHARACTERISTICS

Window

Material	borosilicate		
Shape	plano-concave		
Refractive index at 550 nm	1,48		

Photocathode

Semi-transparent, head-on

Material	Sb Na K Cs		
Useful diameter	>	34	mm
Spectral sensitivity characteristic (Fig. 5)	type S20R		
Maximum spectral sensitivity	550 ±	50	nm
Luminous sensitivity	typ. >	210 150	μA/lm μA/lm
Spectral sensitivity at 860 nm	typ. >	6,5 1,5	mA/W mA/W
at 550 nm	≈	35	mA/W
at 700 nm	≈	23	mA/W
at 900 nm	≈	1,2	mA/W

Electron optical input system

This system consists of: the photocathode (k), a metallized part of the glass envelope, internally connected to the photocathode and the accelerating electrode (g), internally connected to d1.

Multiplier system

Number of stages	10
Dynode structure	linear focused
Dynode material	CuBe
Capacitances	
anode to final dynode	≈ 3 pF
anode to all	≈ 5 pF

Magnetic field

When the photocathode is uniformly illuminated the anode current is halved (at V_{ht} = 1200 V, voltage divider A) at a magnetic flux density of:
- 0,25 mT perpendicular to axis a (Fig. 1);
- 0,15 mT parallel with axis a.

It is recommended that the tube be screened from magnetic fields by a mu-metal shield protruding min. 15 mm beyond the photocathode.

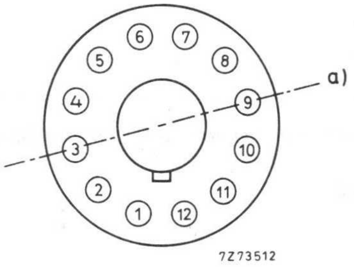

Fig. 1 Axis a with respect to base pins (bottom view).

RECOMMENDED CIRCUITS

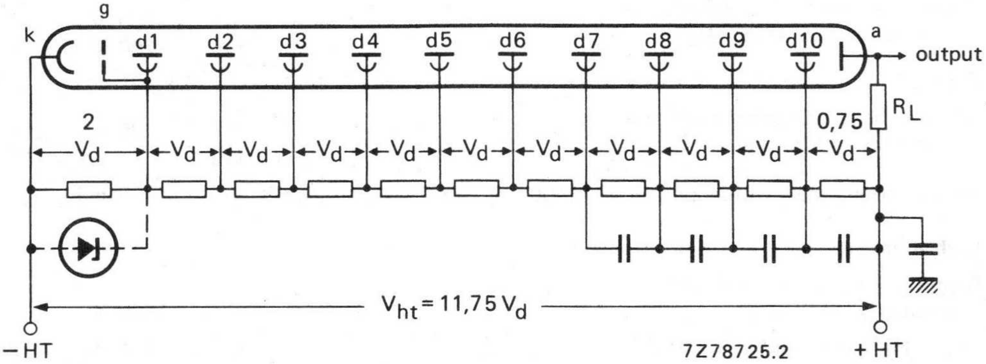

Fig. 2 Voltage divider A.

When operating at low voltage it is recommended that the voltage between the first dynode and the photocathode be maintained at ≈ 200 V, e.g by means of a voltage regulator diode.

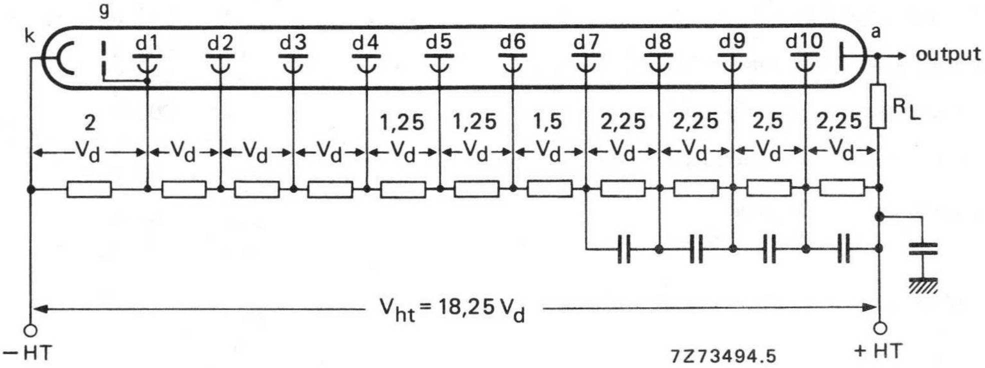

Fig. 3 Voltage divider B.

k = cathode
g = accelerating electrode
dn = dynode no
a = anode
R_L = load resistor

Typical values of capacitors: 10 nF

TYPICAL CHARACTERISTICS

With voltage divider A (Fig. 2)

			notes
Supply voltage for an anode luminous sensitivity of 60 A/lm, (Fig. 6)	< typ.	1500 V 1200 V	
Gain at V_{ht} = 1400 V	≈	1×10^6	
Anode dark current at an anode luminous sensitivity of 60 A/lm	< typ.	20 nA 2 nA	2, 3
Anode current linear within 2% at V_{ht} = 1400 V	up to ≈	50 mA	

With voltage divider B (Fig. 3) 1

Supply voltage for an anode luminous sensitivity at 60 A/lm	≈	1500 V	
Anode pulse rise time at V_{ht} = 1700 V	≈	2,5 ns	4
Anode pulse duration at half height at V_{ht} = 1700 V	≈	6 ns	4
Signal transit time at V_{ht} = 1700 V	≈	26 ns	4
Anode current linear within 2% at V_{ht} = 1700 V	up to ≈	200 mA	

LIMITING VALUES (Absolute maximum rating system)

Supply voltage	max.	1800 V	5
Continuous anode current	max.	0,2 mA	9
Voltage between first dynode and photocathode	max. min.	500 V 150 V	6
Voltage between consecutive dynodes	max.	300 V	
Voltage between anode and final dynode	max. min.	300 V 30 V	7
Ambient temperature range operational (for short periods of time)	max. min.	+80 °C −30 °C	8
continuous operation and storage	max. min.	+50 °C −30 °C	

Notes

1. To obtain a peak pulse current greater than that obtainable with divider A, it is necessary to increase the inter-dynode voltage of the stages progressively. Divider circuit B is an example of a "progressive" divider, giving a compromise between gain, speed, and linearity. Other dividers can be conceived to achieve other compromises. It is generally recommended that the voltage difference between one stage and the next is less than a factor of 2.
2. Wherever possible, the power supply should be arranged so that the cathode is earthed and the anode is at + HT, however, it is sometimes necessary to supply the tube with the anode earthed and the cathode at −HT. Under these circumstances, erratic noise and dark current are generally increased and unstable, particularly after application of voltage. The glass envelope of the tube should be supported only by insulators with an insulation resistance of $> 10^{15}\ \Omega$.
3. Dark current is measured at ambient temperature, after the tube has been in darkness for approx. 1 min. Lower values can be obtained after a longer stabilization period in darkness (approx. 30 min).
4. Measured with a pulsed light source, with a pulse duration (FWHM) of < 1 ns; the cathode being completely illuminated. The rise time is determined between 10% and 90% of the amplitude of the anode pulse. The signal transit time is measured between the instant at which the illuminating pulse at the cathode becomes maximum, and the instant at which the anode pulse attains its maximum. Rise time, pulse duration and transit time vary as a function of high tension supply voltage V_{ht}, approximately as $V_{ht}^{-1/2}$.
5. Total HT supply voltage, or the voltage at which the tube has an anode luminous sensitivity of 600 A/lm whichever is lower.
6. Minimum value to obtain good collection in the input optics.
7. When calculating the anode voltage the voltage drop across the load resistor should be taken into account.
8. This range of temperatures is limited principally by stresses in the sealing layer of the base to the glass bulb. Where low temperature operation is contemplated, the supplier should be consulted.
9. A value of < 10 μA is recommended for applications requiring high stability.

MECHANICAL DATA

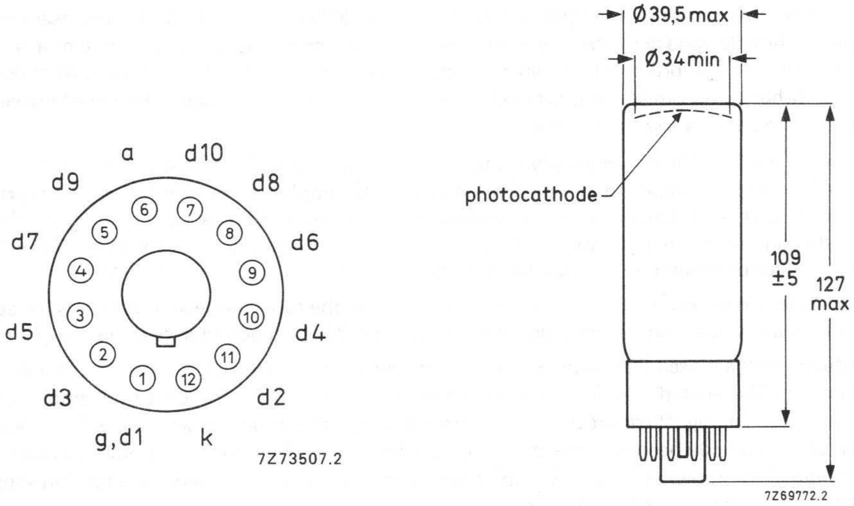

Fig. 4.

Net mass	80 g
Base	12-pin (JEDEC B12-43)

ACCESSORIES

Socket	type FE1012

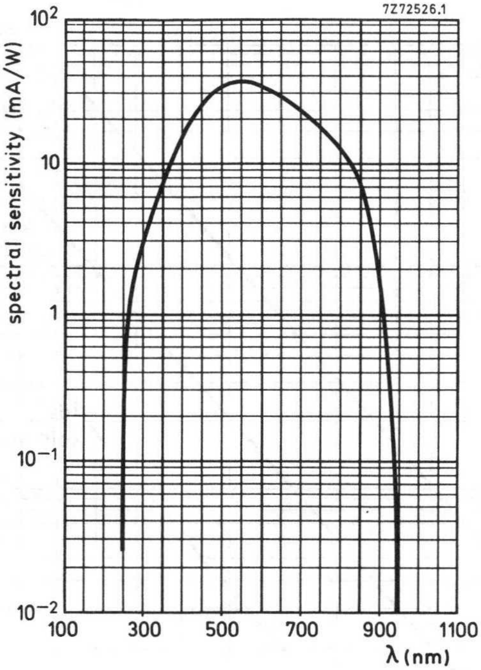

Fig. 5 Spectral sensitivity characteristic.

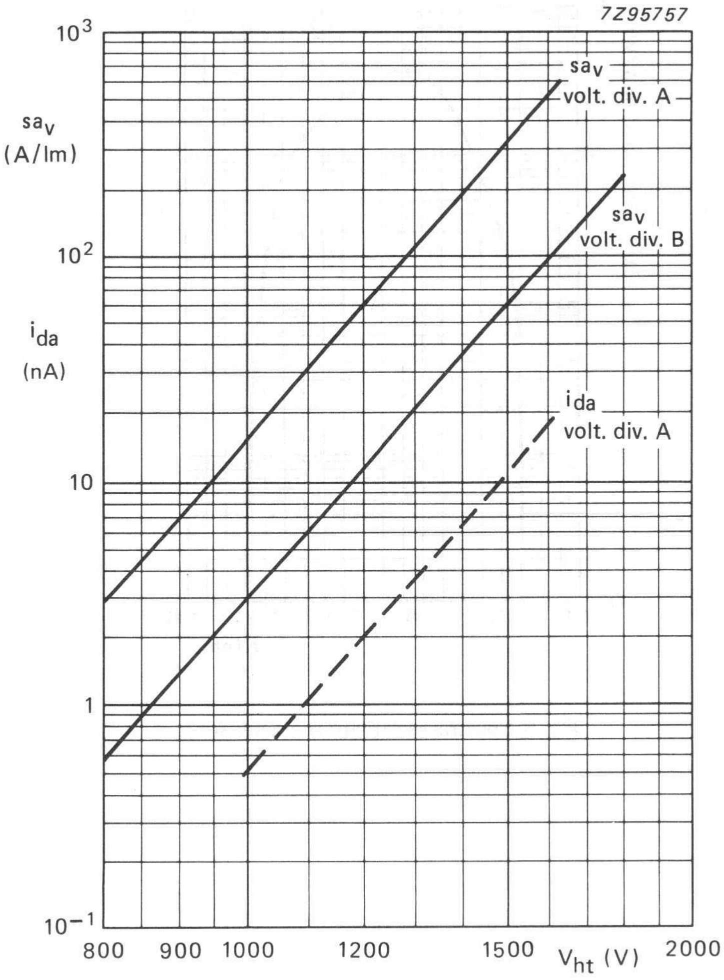

Fig. 6 Anode luminous sensitivity sa_v and anode dark current i_{da} as a function of the supply voltage V_{ht}. i_{da} is given as a dotted line to indicate its principle behaviour only.

10-STAGE PHOTOMULTIPLIER TUBE

The XP2018 B is a 32 mm useful diameter head-on photomultiplier tube with a flat window and a semi-transparent S13 (type U) photocathode. The tube is intended for use in applications where a high sensitivity in the ultraviolet region of the spectrum is required, such as spectrophotometry.

QUICK REFERENCE DATA

Spectral sensitivity characteristic		S13 (type U)
Useful diameter of the photocathode	>	32 mm
Cathode spectral sensitivity at 440 nm		75 mA/W ←
Supply voltage for an anode spectral sensitivity of 60 kA/W at 440 nm		1350 V ←
Anode pulse rise time (with voltage divider B)	≈	2,5 ns
Linearity		
with voltage divider A	up to ≈	100 mA
with voltage divider B	up to ≈	200 mA

To be read in conjunction with *General Operational Recommendations Photomultiplier Tubes.*

GENERAL CHARACTERISTICS

Window

Material		fused silica
Shape		plano-plano
Refractive index		
at 250 nm		1,50
at 400 nm		1,47

Photocathode

Semi-transparent, head-on

Material			Sb Rb Cs
Useful diameter		>	32 mm
Spectral sensitivity characteristic	See fig. 5		
Maximum spectral sensitivity at			400 ± 30 nm
Spectral sensitivity at 440 nm		typ. >	75 mA/W 40 mA/W
Luminous sensitivity		≈	85 μA/lm

Multiplier system

Number of stages		10
Dynode structure		linear focused
Dynode material		CuBe
Capacitances		
anode to final dynode	≈	3 pF
anode to all	≈	5 pF

Magnetic field

When the photocathode is illuminated uniformly the anode current is halved (at V_{ht} = 1200 V, voltage divider A) at a magnetic flux density of:

0,6 mT in the direction of the longitudinal axis;
0,35 mT perpendicular to axis a (see Fig. 1);
0,15 mT parallel to axis a.

It is recommended that the tube be screened against the influence of magnetic fields by a mu-metal shield protruding > 15 mm beyond the photocathode.

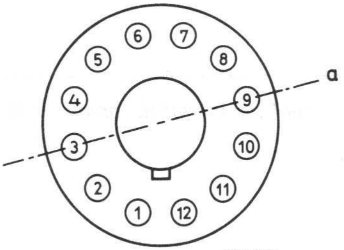

Fig. 1 Axis a with respect to base pins (bottom view).

RECOMMENDED CIRCUITS

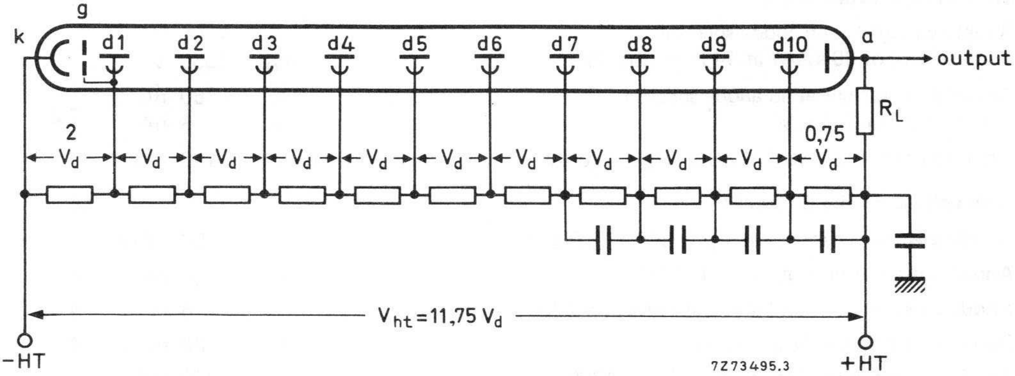

Fig. 2 Voltage divider A. Typical value of capacitors: 10 nF, k = cathode, g = accelerating electrode, dn = dynode no., a = anode, R_L = load resistor.

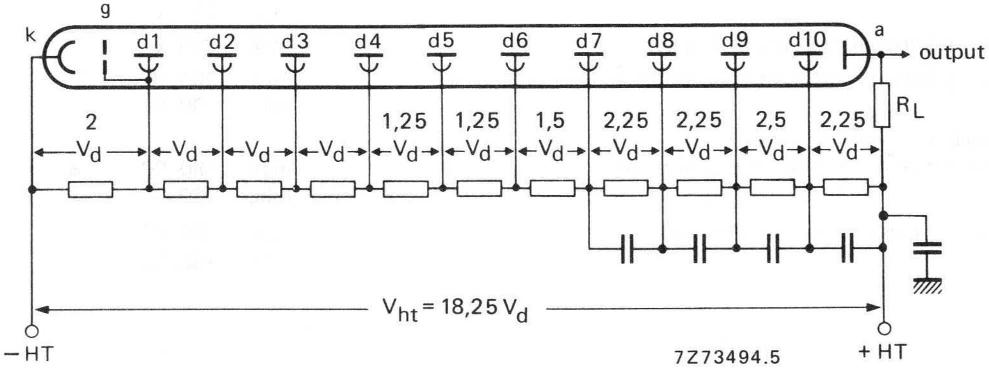

Fig. 3 Voltage divider B. Typical values of capacitors: 10 nF, k = cathode, g = accelerating electrode, dn = dynode no., a = anode, R_L = load resistor.

TYPICAL CHARACTERISTICS

				notes
With voltage divider A Fig. 2)				1
Supply voltage for an anode spectral sensitivity of 60 kA/W at 440 nm (Fig. 7)	<	1600	V	
	typ.	1350	V	
Anode dark current at an anode spectral sensitivity of 60 kA/W	<	50	nA	2,3
	typ.	5	nA	
Anode current linear within 2% at V_{ht} = 1700 V	up to ≈	100	mA	
With voltage divider B (Fig. 3)				1
Anode spectral sensitivity at V_{ht} = 1700 V (Fig. 7)	≈	50	kA/W	
Anode pulse rise time at V_{ht} = 1700 V	≈	2,5	ns	4
Anode pulse duration at half-height at V_{ht} = 1700 V	≈	6	ns	4
Signal transit time at V_{ht} = 1700 V	≈	26	ns	4
Anode current linear within 2% at V_{ht} = 1700 V	up to≈	200	mA	

LIMITING VALUES (absolute maximum rating system)

Supply voltage	max.	1800	V	5
Continuous anode current	max.	0,2	mA	9
Voltage between first dynode and photocathode	max.	500	V	6
	min.	150	V	
Voltage between consecutive dynodes	max.	300	V	
Voltage between anode and final dynode	max.	300	V	7
	min.	30	V	
Ambient temperature range				
operational (for short periods of time)	max.	+80	°C	8
	min.	−30	°C	
continuous operation and storage	max.	+50	°C	
	min.	−30	°C	

Notes

1. To obtain a peak pulse current greater than that obtainable with divider A, it is necessary to increase the inter-dynode voltage of the stages progressively. Divider circuit B is an example of a "progressive" divider, giving a compromise between gain, speed, and linearity. Other dividers can be conceived to achieve other compromises. It is generally recommended that the increase in voltage between one stage and the next be kept less than a factor of 2.
2. Wherever possible, the photomultiplier power supply should be arranged so that the cathode is earthed and the anode is at +HT, however, it is sometimes necessary to supply the tube with the anode earthed and the cathode at −HT. Under these circumstances, erratic noise and dark current are generally increased and unstable, particularly immediately after application of voltage. The glass envelope of the tube should be supported only by isolators having an insulation resistance of $> 10^{15}\ \Omega$.
3. Dark current is measured at ambient temperature, after a stabilization period of the tube in darkness ($\approx 1/4$ h).
4. Measured with a pulsed-light source, with a pulse duration (FWHM) of < 1 ns, the cathode being completely illuminated. The rise time is determined between 10% and 90% of the amplitude of the anode pulse. The signal transit time is measured between the instant at which the illuminating pulse at the cathode becomes maximum, and the instant at which the anode pulse attains its maximum. Rise time, pulse duration and transit time vary as a function of high tension supply voltage V_{ht}, approximately as $V_{ht}^{-1/2}$.
5. Total HT supply voltage or the voltage at which the tube has an anode spectral sensitivity of 600 kA/W, whichever is lower.
6. Minimum value to obtain good collection in the input optics.
7. When calculating the anode voltage the voltage drop across the load resistor should be taken into account.
8. This range of temperature is limited principally by stresses in the sealing layer of the base to the glass bulb. Where low temperature operation is contemplated, the supplier should be consulted.
9. A value of $< 10\ \mu$A is recommended for applications requiring good stability.

MECHANICAL DATA

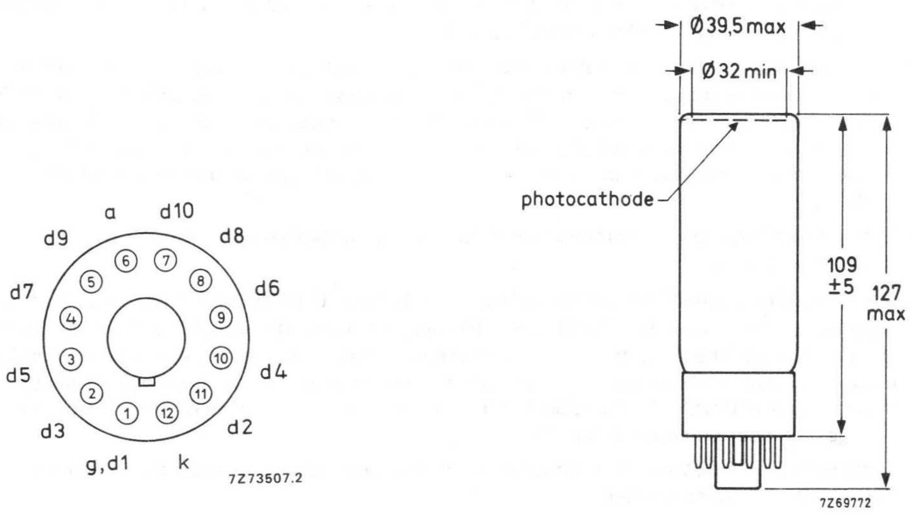

Fig. 4.

Base	12-pin (JEDEC B12–43)
Net mass	78 g

ACCESSORIES

Socket	type FE1012

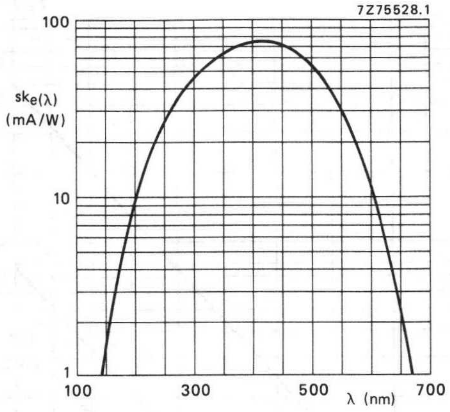

Fig. 5 Spectral sensitivity characteristic.

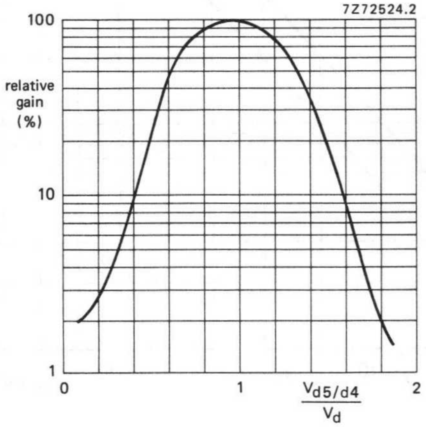

Fig. 6 Relative gain as a function of the voltage between d5 and d4, normalized to V_d; $V_{d6/d4}$ constant.

Note: Gain regulation by changing the voltage between d5 and d4 may cause a degradation of other parameters such as stability and linearity.

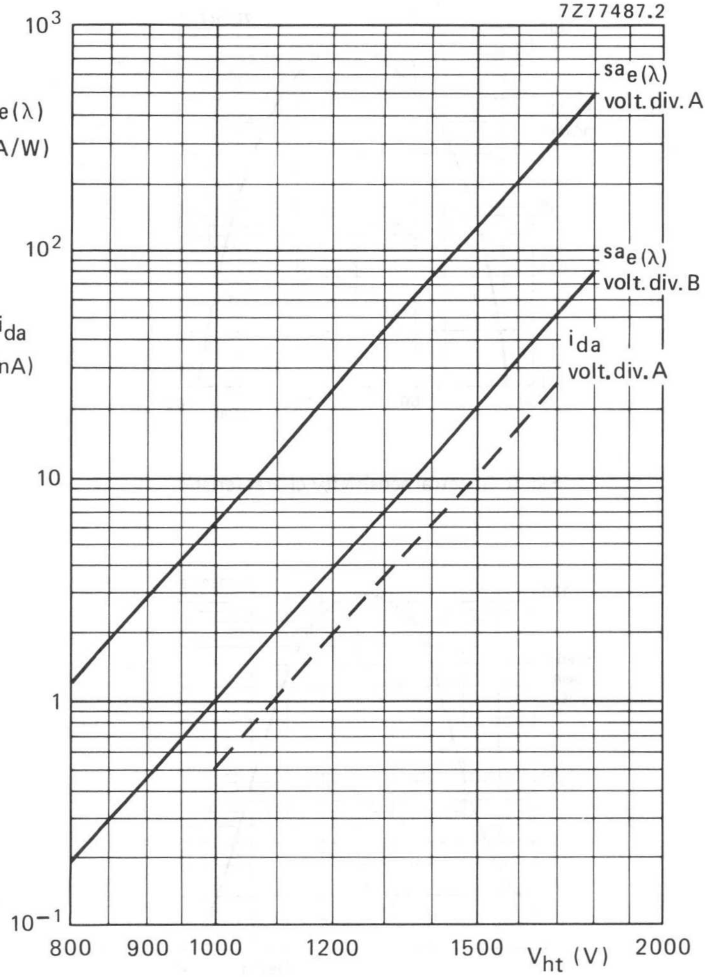

Fig. 7 Anode spectral sensitivity $sa_{e(\lambda)}$, and anode dark current i_{da} as a function of the supply voltage V_{ht}.

12-STAGE PHOTOMULTIPLIER TUBE

The XP2020 and XP2020/Q are 44mm useful diameter head-on photomultiplier tubes with a plano-concave window and a semi-transparent type D photocathode and a high gain 1st dynode from SN14007 onwards. The tubes are intended for use in nuclear physics where the number of photons to be detected is very low. The tubes feature a high cathode sensivity, a good linearity combined with a very low background noise, extremely good time characteristics and good single electron spectrum resolution. They are especially useful in high-energy physics experiments where ultimate time characteristics are needed, such as coincidence measurements, Cerenkov detection, etc. The XP2020/Q has a fused silica window enabling transmission at a wavelength of 160 nm and higher.

QUICK REFERENCE DATA

Spectral sensitivity characteristic	XP2020 XP2020/Q	type D type DU		
Useful diameter of the photocathode		>	44	mm
Quantum efficiency at 400 nm				
XP2020			26	%
XP2020/Q			25	%
Spectral sensitivity of the photocathode at 400 nm				
XP2020			85	mA/W
XP2020/Q			80	mA/W
Single electron spectrum resolution			70	%
Supply voltage for a gain of 3×10^7			2200	V
Pulse amplitude resolution for ^{137}Cs		≈	7,2	%
Anode pulse rise time (with voltage divider B′)		≈	1,5	ns
Linearity, with voltage divider B	up to	≈	280	mA
Signal transit time distribution	σ	≈	0,25	ns

To be read in conjunction with *General Operational Recommendations Photomultiplier Tubes.*

GENERAL CHARACTERISTICS

Window

Material		
XP2020	borosilicate	
XP2020/Q	fused silica	
Shape	plano-concave	
Refractive index		
XP2020, at 550 nm	1,48	
XP2020/Q at 400 nm	1,47	
XP2020/Q at 250 nm	1,50	

Photocathode (note 1)

Semi-transparent, head-on

Material	SbKCs		
Useful diameter	>	44	mm

	XP2020	XP2020/Q	
Spectral sensitivity characteristic	type D (Fig. 6)	type DU (Fig. 7)	
Maximum spectral sensitivity at	400 ± 30	400 ± 30	nm
Quantum efficiency at 400 nm	26	25	%
Spectral sensitivity at 400 nm	typ. 85	typ. 80	mA/W
	> 60	> 60	mA/W

Multiplier system

Number of stages	12	
Dynode structure	linear focused	
Dynode material	CuBe	
Capacitances		
Grid 1 to k + S_1 + acc + g_2 + S_5	≈ 20	pF
Anode to final dynode	≈ 4	pF
Anode to all	≈ 7	pF

Magnetic field

See Fig. 13.

It is recommended that the tube be screened against the influence of magnetic fields by a mu-metal shield protruding > 15 mm beyond the photocathode.

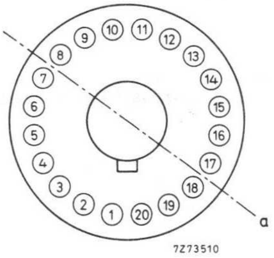

Fig. 1 Axis a with respect to base pins (bottom view).

RECOMMENDED CIRCUITS

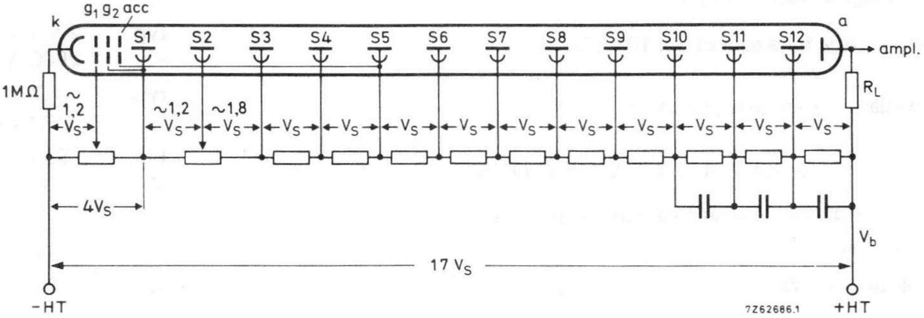

Fig. 2 Voltage divider type A.

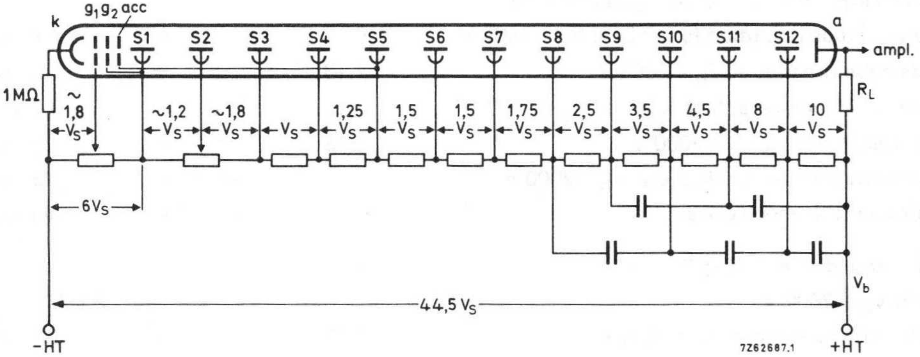

Fig. 3 Voltage divider type B.

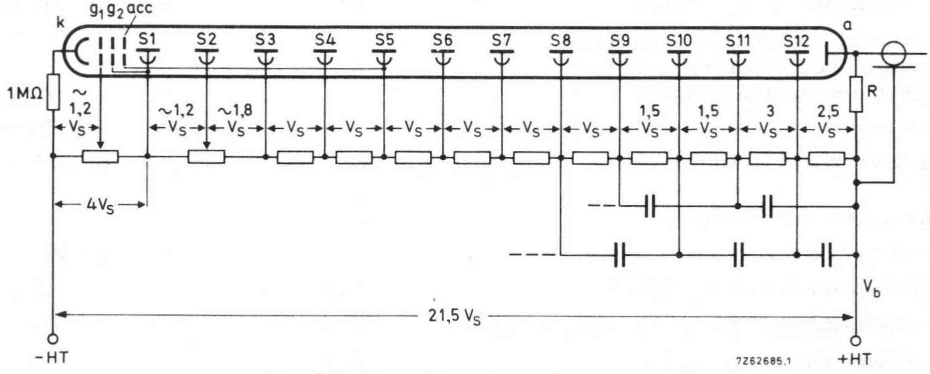

Fig. 4 Voltage divider type B′.

k = cathode
g_1, g_2 = focusing electrodes
acc = accelerating electrode
S_n = dynode no.
a = anode
R_L = load resistor

R = This resistor connects the anode when the output cable is not terminated. Recommended value: 10 kΩ.

The cathode resistor of 1 MΩ limits the current in case of unintentional contact between the conductive coating and earth when the anode is earthed.
Typical value of capacitors: 1 nF.

TYPICAL CHARACTERISTICS	note				
With voltage divider A (Fig. 2)	2				
Supply voltage for a gain of 3×10^{7} (Fig. 8)			typ. $<$	2200 2600	V V
Anode dark current at a gain of 3×10^{7} (Fig. 8)	3,4		typ. $<$	7 100	nA nA
Background noise at a gain of 3×10^{7} (Fig. 11-14)	5		typ. $<$	900 2500	c/s c/s
→ Single electron spectrum at a gain of 3×10^{7} (Fig. 15)					
resolution	15		$\approx$	70	%
peak to valley ratio	16		$\approx$	2,5	
→ Pulse amplitude resolution for ^{55}Fe at a gain of 3×10^{7}	6		$\approx$	41	%
Peak to valley ratio for ^{55}Fe at a gain of 3×10^{7}			$\approx$	34	
→ Pulse amplitude resolution for ^{137}Cs at $V_b = 1500$ V	6		$\approx$	7,2	%
Anode pulse rise time at $V_b = 2000$ V	7,13		$\approx$	1,6	ns
Anode pulse duration at half height at $V_b = 2000$ V	7,13		$\approx$	3,7	ns
Signal transit time at $V_b = 2000$ V	7,13		$\approx$	28	ns
Anode current linear within 2% at $V_b = 2000$ V		up to	$\approx$	25	mA
Obtainable peak anode current			$\approx$	100	mA
With voltage divider B (Fig. 3)	2				
Gain at $V_b = 2800$ V			$\approx$	2×10^{6}	
Anode pulse rise time at $V_b = 2800$ V	7,13		$\approx$	1,7	ns
Anode pulse duration at half height at $V_b = 2800$ V	7,13		$\approx$	2,7	ns
Signal transit time at $V_b = 2800$ V	7,13		$\approx$	31	ns
Signal transit time difference between the centre of the photocathode and 18 mm from the centre at $V_b = 2800$ V			$\approx$	0,25	ns
Anode current linear within 2% at $V_b = 2800$ V		up to	$\approx$	280	mA
Obtainable peak anode current			$\approx$	0,5 to 1	A
With voltage divider B' (Fig. 4)	2				
Gain at $V_b = 2500$ V			$\approx$	2×10^{7}	
Anode pulse rise time at $V_b = 2500$ V	7,13		$\approx$	1,5	ns
Anode pulse duration at half height at $V_b = 2500$ V	7,13		$\approx$	2,4	ns
Signal transit time at $V_b = 2500$ V	7,13		$\approx$	30	ns
Signal transit time distribution at $V_b = 2500$ V	12,13	σ	$\approx$	0,25	ns
Signal transit time difference between the centre of the photocathode and 18 mm from the centre at $V_b = 2500$ V			$\approx$	0,25	ns
Anode current linear within 2% at $V_b = 2500$ V		up to	$\approx$	70	mA
Obtainable peak anode current			$\approx$	250	mA

LIMITING VALUES (Absolute maximum rating system)	note		
Supply voltage	8	max.	3000 V
Continuous anode current	14	max.	0,2 mA
Voltage between focusing electrode, g_1 and photocathode		max.	300 V
Voltage between first dynode and photocathode	9	max. min.	800 V 300 V
Voltage between consecutive dynodes (except S_{11} and S_{12})		max.	400 V
Voltage between dynodes S_{11} and S_{12}	13	max.	600 V
Voltage between anode and final dynode	10	max. min.	700 V 80 V
Ambient temperature range	11		
operational (for short periods of time)		max. min.	+80 °C −30 °C
continuous operation and storage		max. min.	+50 °C −30 °C

Notes

1. The bialkaline photocathode has a significant resistance which increases rapidly with reducing temperature. It is thus recommended that it should not be subjected to light of too great an intensity; the cathode current should be limited to, for example, 1 nA at room temperature or 0,1 nA at −30 °C. If too high a photocurrent is passed, the cathode can no longer be considered to be an equipotential surface, and the focusing of electrons onto the first dynode will be affected, resulting in departure of linearity.
2. To obtain a peak pulse current greater than that obtainable with divider A, it is necessary to increase the inter-dynode voltages of the stages progressively. Dividers B and B′ are examples of "progressive" dividers, each giving a compromise between gain, speed, and linearity. Other dividers can be conceived to achieve other compromises. It is generally recommended that the increase in voltage between one stage and the next be kept less than a factor of 2.
3. Wherever possible, the power supply should be arranged so that the cathode is earthed and the anode is at + HT, however, it is sometimes necessary to supply the tube with the anode earthed and the cathode at −HT. Under these circumstances, erratic noise and dark current are generally increased and unstable, particularly immediately after application of voltage. The tube is provided with a conductive coating connected to the cathode. It is recommended that, if a metal shield is used, this should be kept at cathode potential. This implies safety precautions to protect the user. The envelope of the tube should be supported only by isolators having an insulation resistance of $> 10^{15}\ \Omega$.
4. Dark current is measured at ambient temperature, after a stabilization period of the tube in darkness (≈ ¼ h).
5. After having been stored with its protective hood, the tube is placed in darkness with V_b set to a value to give a gain of 3×10^7. After a 30 min. stabilization period noise pulses with a threshold of $4{,}25 \times 10^{-13}$ C (corresponding to 0,1 photoelectron) are recorded (Fig. 9).
6. Pulse amplitude resolution for ^{55}Fe is measured with a NaI (Tl) cylindrical scintillator with a diameter of 19 mm and a height of 3 mm. The count rate is $\approx 10^3$ c/s. Pulse amplitude resolution for ^{137}Cs is measured with a NaI (Tl) cylindrical scintillator with a diameter of 44 mm and a height of 50 mm. The count rate is $\approx 10^4$ c/s.
7. Measured with a pulsed light source, with a pulse duration (FWHM) of < 1 ns, the cathode being completely illuminated. The rise time is determined between 10% and 90% of the amplitude of the anode pulse. The signal transit time is measured between the instant at which the illuminating pulse at the cathode becomes maximum, and the instant at which the anode pulse attains its maximum. Rise time, pulse duration and transit time vary as a function of high tension supply voltage V_b, approximately as $V_b^{-1/2}$.
8. Total HT supply voltage, or the voltage at which the tube has a gain of 2×10^8, whichever is lower.
9. Minimum value to obtain good collection in the input optics.
10. When calculating the anode voltage the voltage drop across the load resistor should be taken into account.
11. This range of temperatures is limited principally by stresses in the sealing layer of the base to the glass bulb. Where low temperature operation is contemplated, the supplier should be consulted.
12. Transit time fluctuations of single electrons leaving the photocathode result in a transit time distribution at the anode. This distribution is characterized by its standard deviation σ.
13. Non-inductive resistors of 51 Ω are incorporated in the base connected to S_{11} and S_{12}. See also *General Operational Recommendations Photomultiplier Tubes.*
14. A value of < 10 μA is recommended for applications requiring good stability.
15. The single electron spectrum resolution to be optimized by adjusting the dynode 2 voltage.
16. Peak to valley ratio is defined as the single electron peak value divided by the minimum value to the left of the peak.

MECHANICAL DATA

(1) The envelope of the tube is covered with a conductive coating, connected to the cathode.
Care should be taken to avoid electric shock.

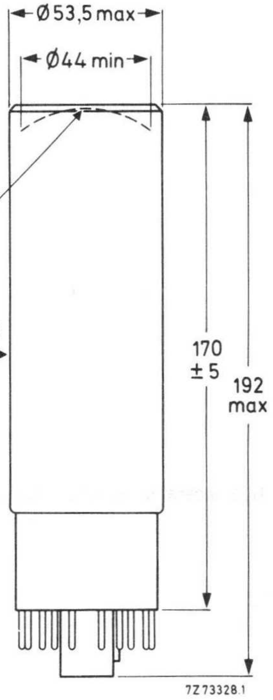

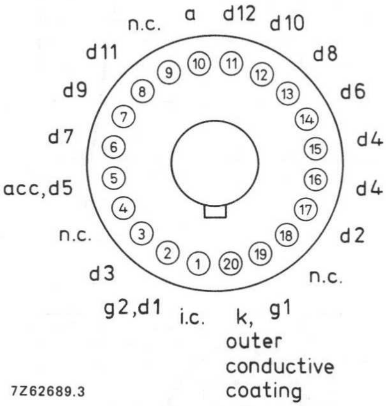

Fig. 5.

The base connections of the XP2020 are such that the tube is unilaterally interchangeable with the 56AVP-family tubes.

Base	20-pin (JEDEC B20-102)
Net mass	240 g

ACCESSORIES

Socket	type FE1020

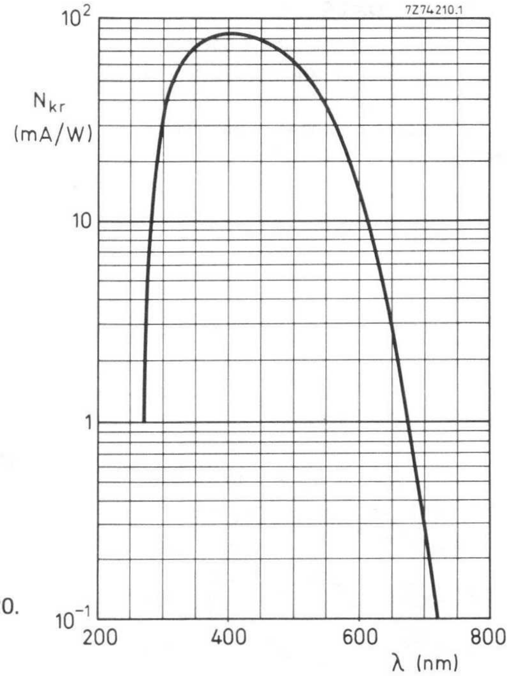

Fig. 6 Spectral sensitivity characteristic XP2020.

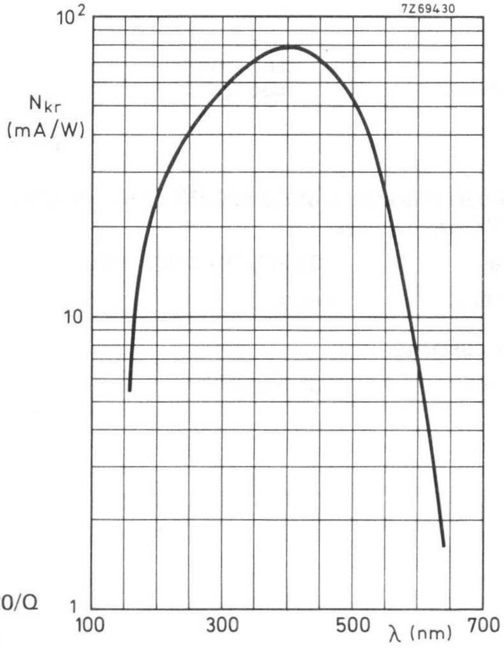

Fig. 7 Spectral sensitivity characteristic XP 2020/Q

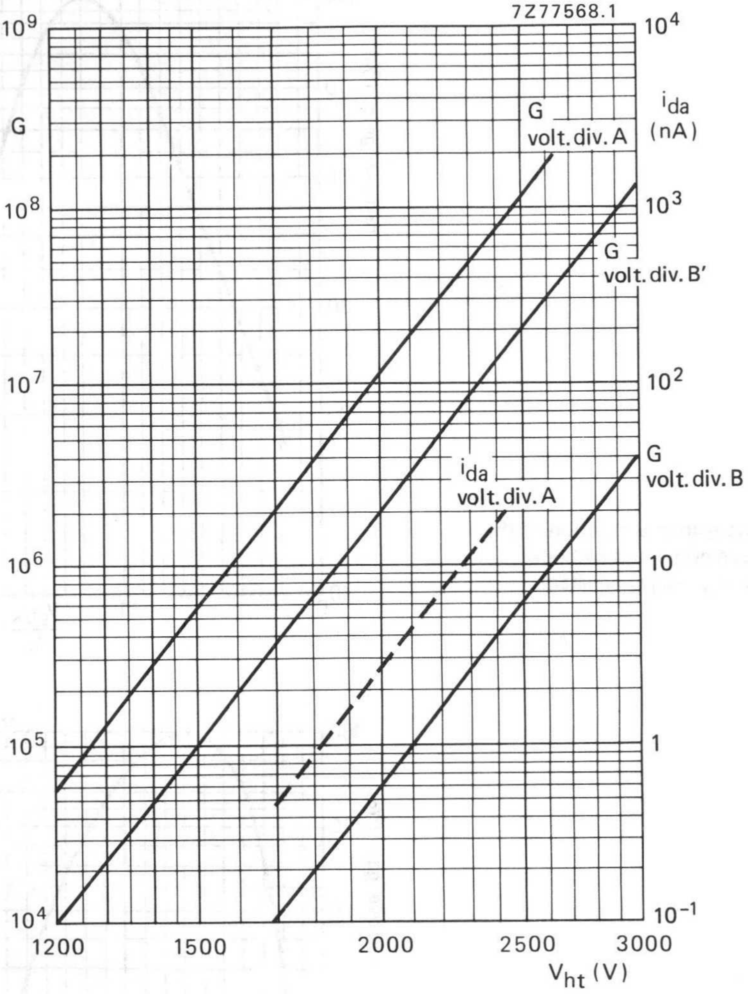

Fig. 8 Gain, G, and anode dark current, i_{da}, as a function of supply voltage V_b.

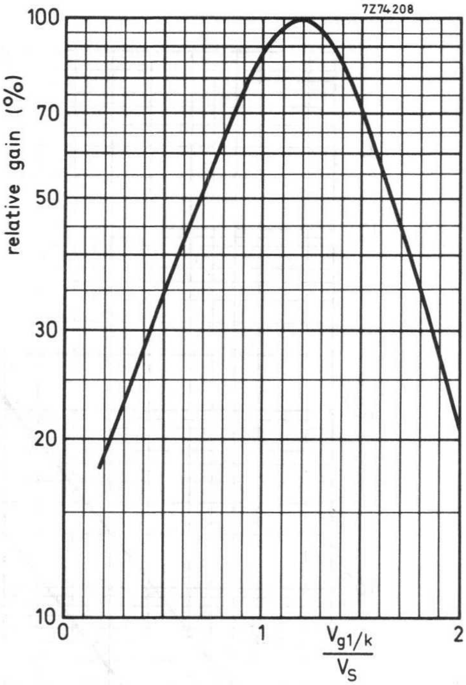

Fig. 9 Relative gain as a function of the voltage between grid 1 and cathode, normalized to V_S. $V_{S1/k}$ constant.

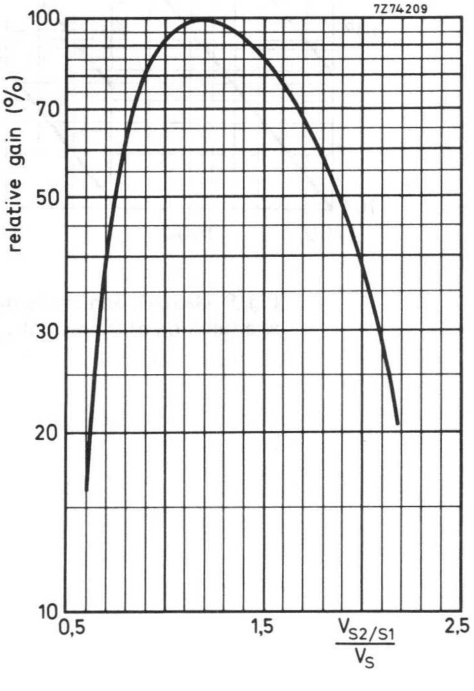

Fig. 10 Relative gain as a function of the voltage between S_2 and S_1, normalized to V_S. $V_{S3/S1}$ constant.

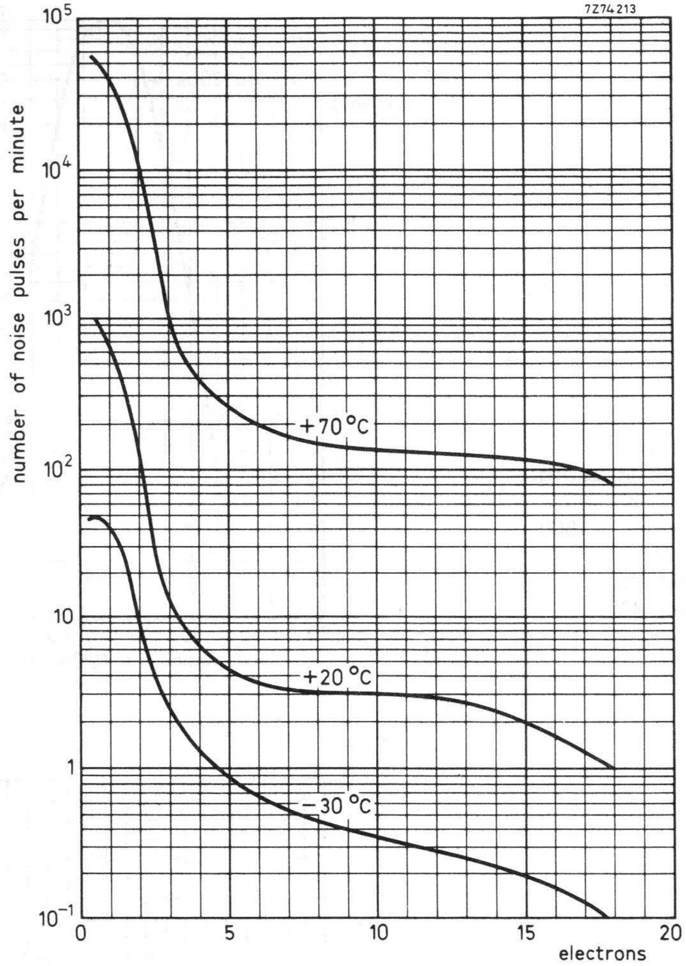

Fig. 11 Typical background spectrum from 0,1 to 18 equivalent photoelectrons, at a gain of 3×10^7 with voltage divider A.

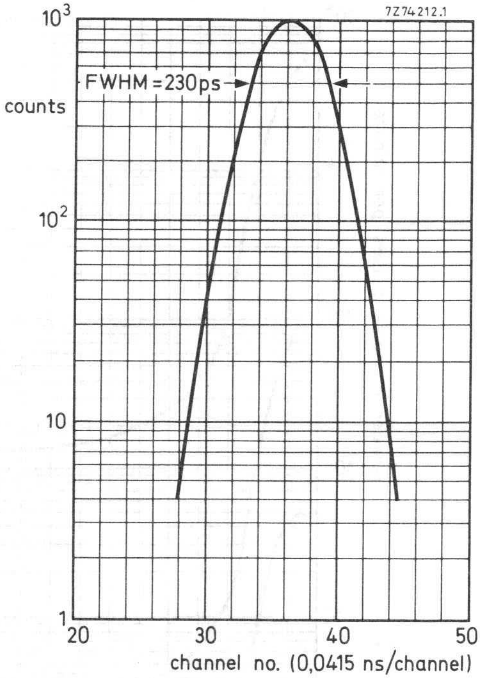

Fig. 12 Time resolution for 2 tubes XP2020 in coincidence. Measuring conditions:
Number of photoelectrons ≈ 1500
Supply voltage 2500 V
Constant fraction operation
Dynamic energy region 20%.

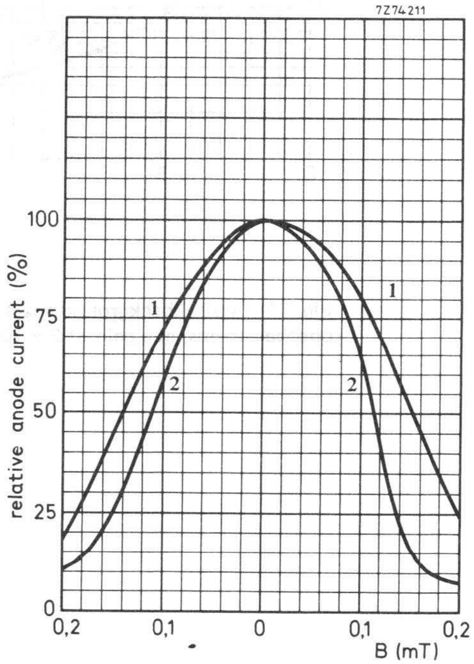

Fig. 13 Relative anode current as a function of the magnetic flux density B.
1. ⊥ axis a
2. // axis a

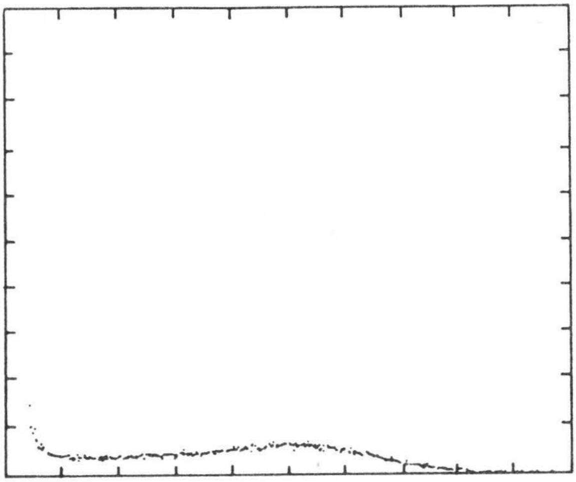

Fig. 14 Background noise spectrum, obtained with an XP2020 tube, series no. 13246. Gain: 3×10^7.

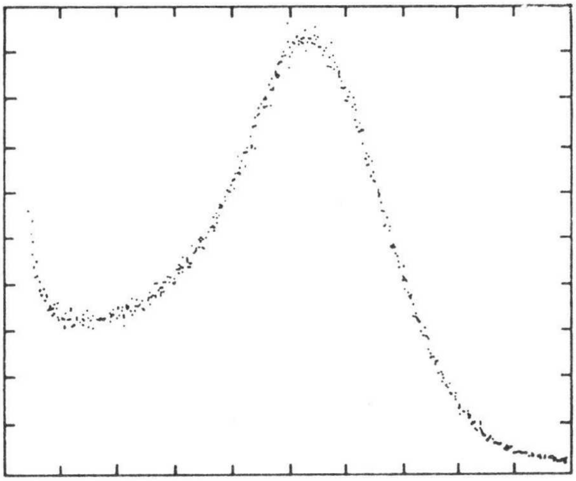

Fig. 15 Single electron spectrum obtained with an XP2020 tube, series no. 13246. Gain: 3×10^7. Resolution 67%. Peak to valley ratio: 2,8 (see Note 16).

8-STAGE PHOTOMULTIPLIER TUBE

- 32 mm useful diameter head-on type
- Flat window
- Semi-transparent tri-alkaline S20 (type T) photocathode
- Good time characteristics
- Good linearity
- For industrial applications, e.g. laser reading

QUICK REFERENCE DATA

Spectral sensitivity characteristic	S20 (type T)
Useful diameter of the photocathode	> 32 mm
Cathode spectral sensitivity at 700 nm	20 mA/W
Supply voltage for anode luminous sensitivity of 6 A/lm	1120 V
Anode pulse rise time (with voltage divider B)	≈ 2,5 ns
Linearity, with voltage divider B	up to ≈ 200 mA

To be read in conjunction with *General Operational Recommendations Photomultiplier Tubes.*

GENERAL CHARACTERISTICS

Window (frosted)

Material	borosilicate	
Shape	plano-plano	
Refractive index at 550 nm	1,48	

Photocathode

Semi-transparent, head-on

Material	SbNaKCs	
Useful diameter	> 32 mm	
Spectral sensitivity characteristic (Fig. 5)	S20 (type T)	
Maximum spectral sensitivity	420 ± 30 nm	
Luminous sensitivity	≈ 200 μA/lm	note 1
Spectral sensitivity at 700 nm	typ. 20 mA/W > 10 mA/W	note 2
Spectral sensitivity at 630 nm	≈ 40 mA/W	note 2

Mulitplier system

Number of stages	8
Dynode structure	linear focused
Dynode material	CuBe
Capacitances	
anode to final dynode	≈ 3 pF
anode to all	≈ 5 pF

Magnetic field

When the photocathode is uniformly illuminated the anode current is halved (at V_{ht} = 1200 V, voltage divider A) at a magnetic flux density of:

- 0,6 mT in the direction of the longitudinal axis;
- 0,35 mT perpendicular to axis a (see Fig. 1);
- 0,15 mT parallel with axis a.

It is recommended that the tube be screened from magnetic fields by a mu-metal shield protruding > 15 mm beyond the photocathode.

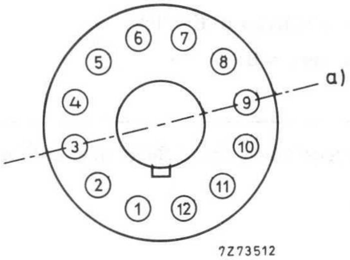

Fig. 1 Axis a with respect to base pins (bottom view).

RECOMMENDED CIRCUITS

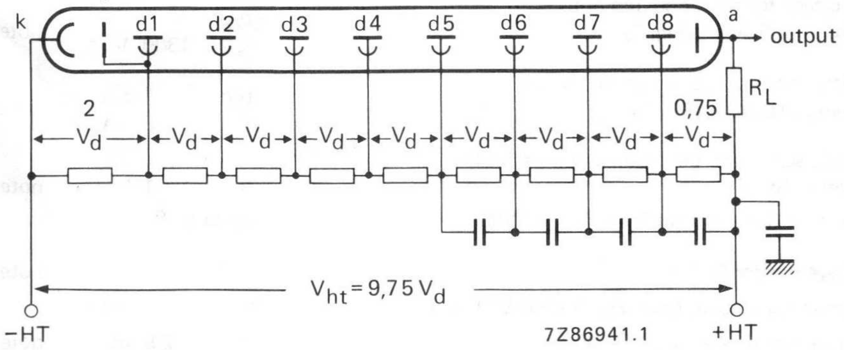

Fig. 2 Voltage divider A.

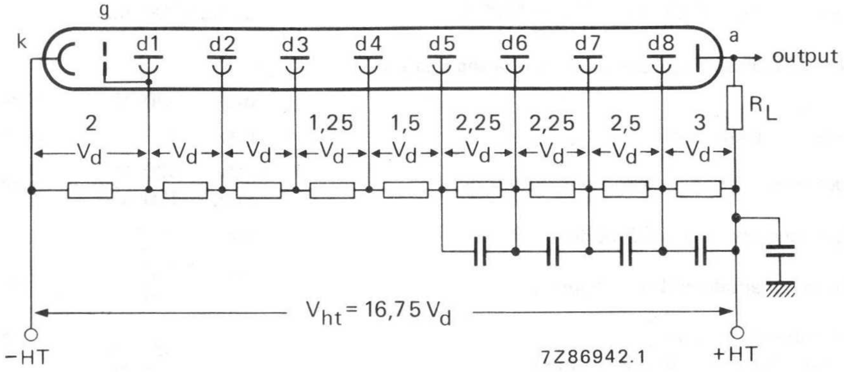

Fig. 3 Voltage divider B.

k = cathode
g = accelerating electrode
dn = dynode no.
a = anode
R_L = load resistor

Typical value of capacitors: 10 nF

TYPICAL CHARACTERISTICS

With voltage divider A (Fig. 2)				note 3
Supply voltage for an anode luminous sensitivity of 6 A/lm (Fig. 7)	typ. <	1120 1300	V V	note 1
Anode dark current at an anode luminous sensitivity of 6 A/lm (Fig. 7)	typ. <	1 5	nA nA	notes 4, 5
Mean anode sensitivity deviation at V_{ht} = 1000 V, long term (16 h)	≈	1	%	note 6
Anode current linear within 2% at V_{ht} = 1300 V	up to ≈	80	mA	
With voltage divider B (Fig. 3)				note 3
Anode luminous sensitivity at V_{ht} = 1500 V (Fig. 7)	≈	7	A/lm	
Anode pulse rise time at V_{ht} = 1500 V	≈	2,5	ns	note 7
Anode pulse duration at half height at V_{ht} = 1500 V	≈	6	ns	note 7
Signal transit time at V_{ht} = 1500 V	≈	24	ns	note 7
Anode current linear within 2% at V_{ht} = 1500 V	up to ≈	200	mA	

LIMITING VALUES (Absolute maximum rating system)

Supply voltage	max.	1800	V	note 8
Continuous anode current	max.	0,2	mA	note 9
Voltage between first dynode and photocathode	max. min.	500 150	V V	note 10
Voltage between consecutive dynodes	max.	300	V	
Voltage between anode and final dynode	max. min.	350 30	V V	note 11
Ambient temperature range operational (for short periods of time)	max. min.	+ 80 −30	°C °C	note 12
continuous operation and storage	max. min.	+ 50 −30	°C °C	

NOTES

1. Luminous sensitivity is measured with a tungsten filament lamp with a colour temperature of 2856 ± 5K.
2. Spectral sensitivity is measured with a tungsten filament lamp with a colour temperature of 2856 ± 5K. Light is transmitted through an interferential filter.
3. To obtain a peak pulse current greater than that obtainable with divider A, it is necessary to increase the inter-dynode voltage of the stages progressively. Divider circuit B is an example of a "progressive" divider, giving a compromise between gain, speed, and linearity. Other dividers can be conceived to achieve other compromises. It is generally recommended that the increase in voltage between one stage and the next be kept less than a factor of 2.
4. Wherever possible, the power supply should be arranged so that the cathode is earthed and the anode is at +HT, however, it is sometimes necessary to supply the tube with the anode earthed and the cathode at −HT. Under these circumstances, erratic noise and dark current are generally increased and unstable, particularly after application of voltage. The glass envelope of the tube should be supported only by insulators having an insulation resistance of $> 10^{15}\,\Omega$.
5. Dark current is measured at ambient temperature, after the tube has been in darkness for approx. 1 min. Lower values can be obtained after a longer stabilization period in darkness (approx. 30 min).
6. The mean anode sensitivity deviation measurement is carried out with light pulses at a count rate of $\approx 10^4$ c/s, resulting in an average anode current of 0,3 μA. See also *General Operational Recommendations Photomultiplier Tubes.*
7. Measured with a pulsed light source, with a pulse duration (FWHM) of < 1 ns: the cathode being completely illuminated. The rise time is determined between 10% and 90% of the amplitude of the anode pulse. The signal transit time is measured between the instant at which the illuminating pulse at the cathode becomes maximum, and the instant at which the anode pulse attains its maximum. Rise time, pulse duration and transit time vary as a function of high tension supply voltage V_{ht}, approximately as $V_{ht}^{-1/2}$.
8. Total HT supply voltage or the voltage at which the tube has an anode luminous sensitivity of ≈ 120 A/lm (test certificate voltage multiplied by 1,65), whichever is lower.
9. A value of < 10 μA is recommended for applications requiring good stability.
10. Minimum value to obtain good collection in the input optics.
11. When calculating the anode voltage the voltage drop across the load resistor should be taken into account.
12. This range of temperatures is limited by stresses in the sealing layer of the base to the glass bulb.

MECHANICAL DATA

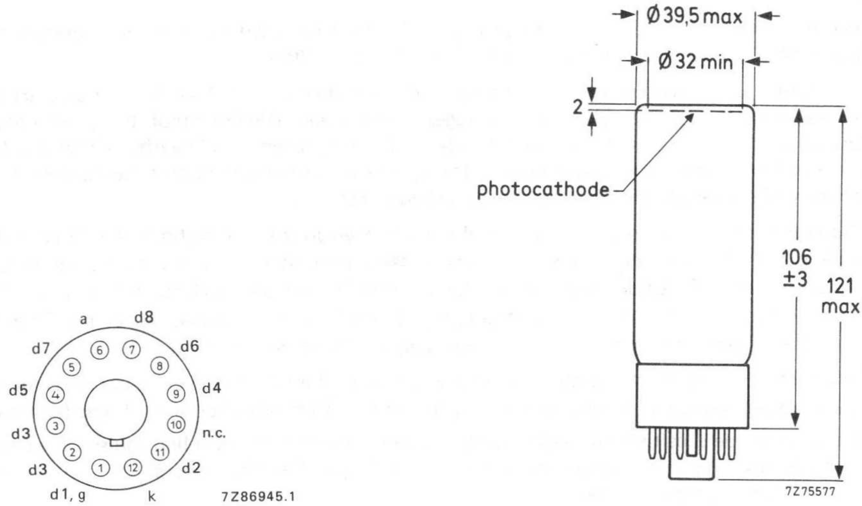

Fig. 4.

Base	12-pin (JEDEC B12-43)
Net mass	75 g
Socket*	FE1012

Note: To improve the anode sensitivity over the entire cathode area the external surface of the window has been frosted.

---

* To be ordered separately.

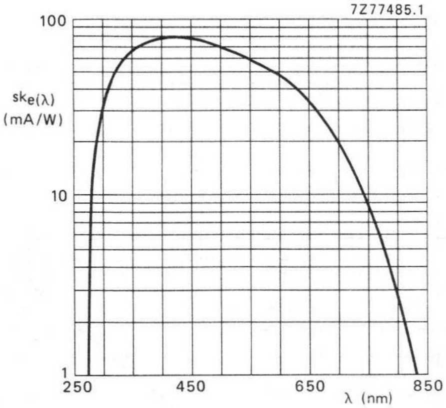

Fig. 5 Spectral sensitivity characteristic.

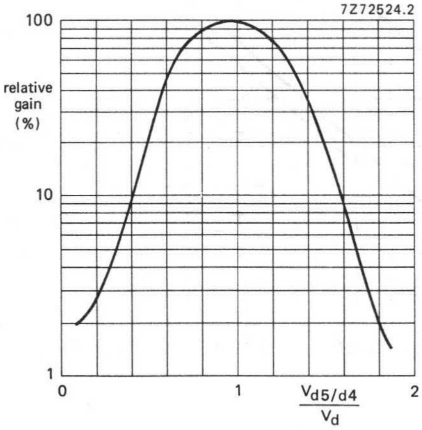

Fig. 6 Relative gain as a function of the voltage between d5 and d4, normalized to V_d; $V_{d6/d4}$ constant.

Note: Gain regulation by changing the voltage between d5 and d4 may cause a degradation of other parameters such as stability and linearity.

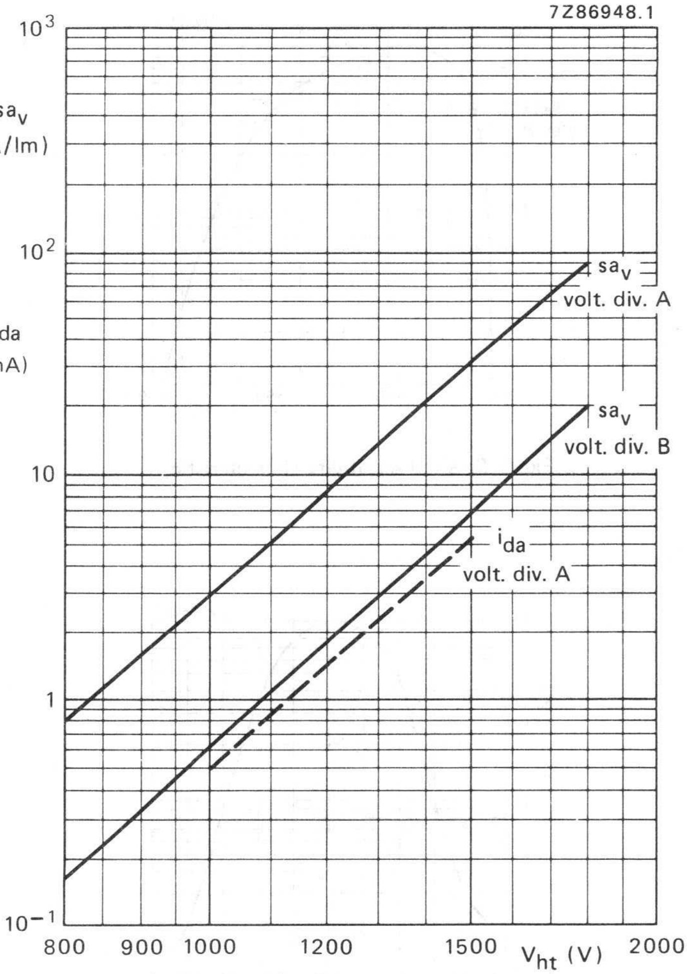

Fig. 7 Anode luminous sensitivity sa_V and anode dark current i_{da} as a function of the supply voltage V_{ht}; i_{da} is given as a dotted line to indicate its principle behaviour only.

XP2041 replaces XP2040
XP2041/Q replaces XP2040/Q

14-STAGE PHOTOMULTIPLIER TUBES

- 110 mm useful diameter head-on type
- Concave-convex window
- Semi-transparent bi-alkaline type D photocathode
- For nuclear physics where the number of photons to be detected is very low, c.q. where very good time characteristics are required, e.g. coincidence measurements and Cerenkov light detection
- XP2041 is supplied with a plano-concave plastic adapter (300 nm and up)
- XP2041/Q is supplied with a plano-concave fused silica adapter (200 nm and up)

QUICK REFERENCE DATA

Spectral sensitivity characteristic		type D, extended ultra violet	
Useful diameter of the photocathode	>	110	mm
Quantum efficiency at 400 nm		26	%
Cathode spectral sensitivity at 400 nm		85	mA/W
Supply voltage for a gain of 3×10^7		2200	V
Anode pulse rise time (with voltage divider B)	≈	2	ns
Linearity			
with voltage divider A (Fig. 2)	up to ≈	30	mA
with voltage divider B (Fig. 3)	up to ≈	220	mA
with voltage divider B' (Fig. 4)	up to ≈	80	mA

To be read in conjunction with *General Operational Recommendations Photomultiplier Tubes.*

GENERAL CHARACTERISTICS

Window *

Material	u.v. transmitting glass
Shape	concave-convex
Radius of curvature	183 ± 5 mm
Refractive index at 550 nm	1,48

---

* This glass window (type Schott 8337 or equivalent) must be protected from humidity.

Photocathode

Semi-transparent, head-on	
Material	Sb K Cs
Useful diameter	> 110 mm
Spectral sensitivity characteristic (Fig. 6)	type D, extended ultraviolet
Maximum spectral sensitivity	400 ± 30 nm
Quantum efficiency at 400 nm	26 %
Spectral sensitivity at 400 nm	typ. 85 mA/W
	> 65 mA/W

Multiplier system

Number of stages	14
Dynode structure	linear focused
Dynode material	CuBe
Capacitances	
anode to final dynode	≈ 5 pF
anode to all	≈ 7 pF
grid1 to k + grid2 + grid3 + d1	≈ 70 pF

Magnetic field

When the photocathode is illuminated uniformly the anode current is halved (at V_{ht} = 1900 V, voltage divider A) at a magnetic flux density of:

0,15 mT in the direction of the longitudinal axis;
0,13 mT perpendicular to axis a (see Fig. 1);
0,05 mT parallel to axis a.

It is recommended that the tube be screened against the influence of magnetic fields by a mu-metal shield protruding > 15 mm beyond the photocathode.

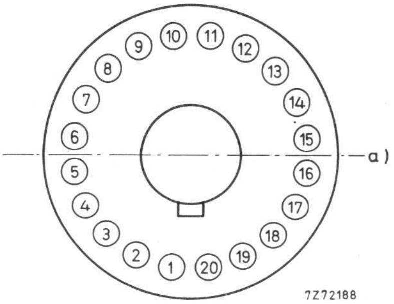

Fig. 1 Axis with respect to base pins (bottom view).

RECOMMENDED CIRCUITS

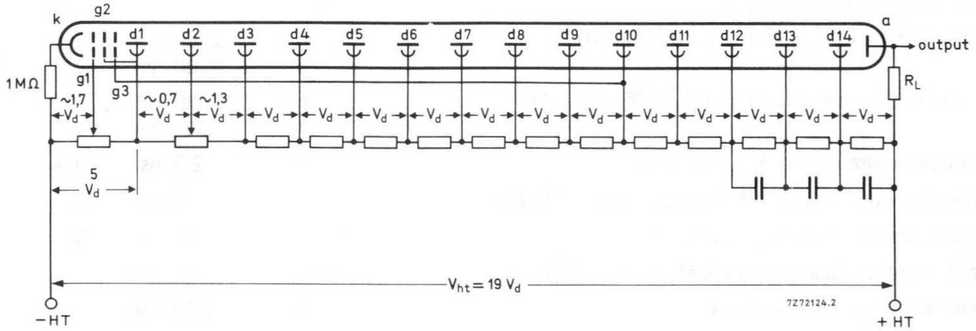

Fig. 2 Voltage divider A.

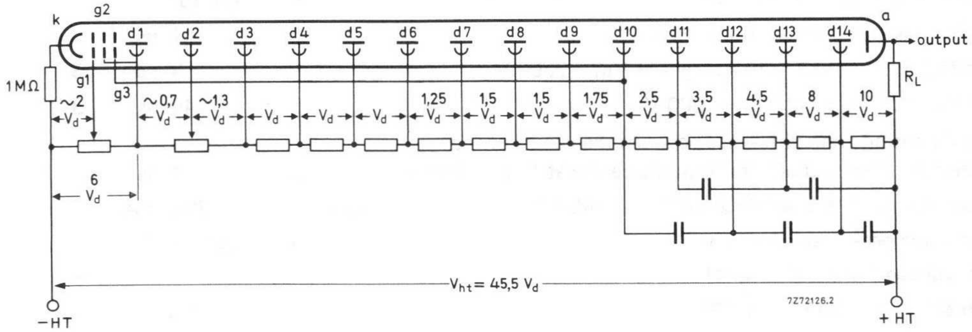

Fig. 3 Voltage divider B.

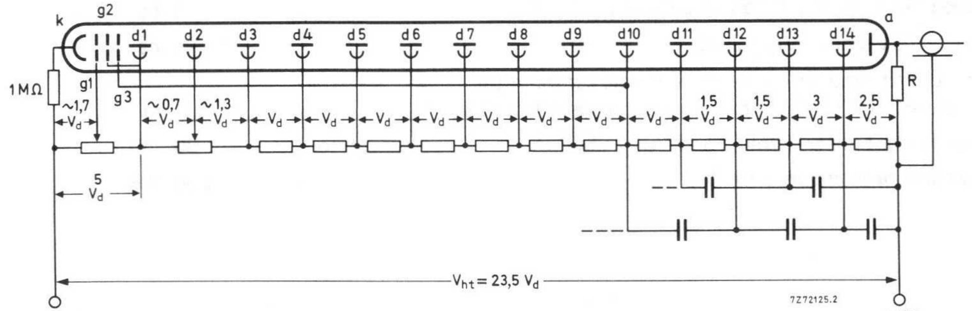

Fig. 4 Voltage divider B′.

k = cathode; g1, g2 = focusing electrodes; g3 = accelerating electrode; dn = dynode no.; a = anode
R_L = load resistor. The voltage between k and g1 should be adjusted at about 1,7 V_d for voltage dividers A and B′ or about 2 V_d for voltage divider B.
R = This resistor serves to connect the anode when the output cable is not terminated. Recommended value: 10 kΩ. The cathode resistor of 1 MΩ limits the current in case of unintentional contact between the conductive coating and earth when the anode is earthed. The voltage between d1 and d2 should be adjusted at about 0,7 V_d. Typical value of capacitors: 1 nF.

TYPICAL CHARACTERISTICS

				notes
With voltage divider A (Fig. 2)				
Supply voltage for a gain of 3×10^7 (Fig. 10)	typ.	2200	V	1
	$<$	2700	V	
Anode dark current at a gain of 3×10^7 (Fig. 10)	typ.	30	nA	1, 2
	$<$	600	nA	
Anode pulse rise time at $V_{ht} = 2200$ V	$\approx$	2,5	ns	3, 4
Anode pulse duration at half height at $V_{ht} = 2200$ V	$\approx$	5	ns	3
Signal transit time at $V_{ht} = 2200$ V	$\approx$	46	ns	3
Anode current linear within 2% at $V_{ht} = 2200$ V	up to $\approx$	30	mA	
Obtainable peak anode current	$\approx$	200	mA	
With voltage divider B (Fig. 3)	$\approx$			5
Gain at $V_{ht} = 2800$ V (Fig. 10)	$\approx$	4×10^6		
Anode pulse rise time at $V_{ht} = 2800$ V	$\approx$	2,1	ns	3, 4
Anode pulse duration at half height at $V_{ht} = 2800$ V	$\approx$	3	ns	3
Signal transmit time at $V_{ht} = 2800$ V	$\approx$	49	ns	3
Signal transmit time difference between the centre of the photocathode and 50 mm from the centre at $V_{ht} = 2800$ V	$\approx$	1	ns	
Anode current linear within 2% at $V_{ht} = 2800$ V	up to $\approx$	280	mA	
Obtainable peak anode current	$\approx$	0,5 to 1	A	
With voltage divider B′ (Fig. 4)	$\approx$			5
Gain at $V_{ht} = 2500$ V (Fig. 10)	$\approx$	2×10^7		
Anode pulse rise time at $V_{ht} = 2500$ V	$\approx$	2	ns	3, 4
Anode pulse duration at half height at $V_{ht} = 2500$ V	$\approx$	3	ns	3
Signal transit time at $V_{ht} = 2500$ V	$\approx$	46	ns	3
Signal transit time difference between the centre of the photocathode and 50 mm from the centre at $V_{ht} = 2500$ V	$\approx$	1	ns	
→ Anode current linear within 2% at $V_{ht} = 2500$ V	up to $\approx$	80	mA	
Obtainable peak anode current	$\approx$	500	mA	

LIMITING VALUES (Absolute maximum rating system)

			notes
Supply voltage	max.	3000 V	6
Continuous anode current	max.	0,2 mA	7
Voltage between focusing electrode, g1 and photocathode	max.	300 V	
Voltage between first dynode and photocathode	max.	800 V	8
	min.	400 V	
Voltage between accelerating electrode and photocathode	max.	18 V_d	
	min.	14 V_d	
Voltage between consecutive dynodes	max.	500 V	
Voltage between anode and final dynode	max.	500 V	9
	min.	80 V	
Ambient temperature range			
operational (for short periods of time)	max.	+80 °C	10
	min.	−30 °C	
continuous operation and storage	max.	+50 °C	
	min.	−30 °C	

Notes

1. Wherever possible, the photomultiplier power supply should be arranged so that the cathode is earthed and the anode is at +HT, however, it is sometimes necessary to supply the tube with the anode earthed and the cathode at −HT. Under these circumstances, erratic noise and dark current are generally increased and unstable, particularly immediately after application of voltage. The tube is provided with a conductive coating connected to the cathode. It is recommended to keep the metal envelope at cathode potential. This implies safety precautions to protect the user.
2. Dark current is measured at ambient temperature, after a stabilization period of the tube in darkness ($\approx$ 15 min).
3. Measured with a pulsed light source with a pulse duration of < 1 ns; the cathode being completely illuminated.
   The rise time is determined between 10% and 90% of the amplitude of the anode pulse.
   The signal transit time is measured between the instant at which the illuminating pulse at the cathode becomes maximum, and the instant at which the anode pulse attains its maximum. Rise time, pulse duration and transit time vary as a function of the HT supply voltage V_{ht}, approximately as $V_{ht}^{-1/2}$.
4. A non-inductive resistor of 51 Ω is incorporated in the base, connected to d14.
   See also *"General Operational Recommendations Photomultiplier tubes"*.
5. Divider circuits B and B′ are examples of "progressive dividers", each giving a compromise between gain, speed, and linearity. Other dividers can be conceived to achieve other compromises. It is generally advisable to keep the increase in voltage between one stage and the next to less than a factor 2.
6. Total HT supply voltage, or the voltage at which the tube circuited in voltage divider "A" has a gain of 3×10^8, whichever is lower.
7. For applications requiring a high stability a value of $<10 \mu A$ is recommended.
8. Minimum value to obtain good collection in the input optics.
9. When calculating the anode voltage the voltage drop across the load resistor should be taken into account.
10. This range of temperatures is limited principally by stresses in the sealing layer of the base to the glass bulb.
    Where lower temperature operation is contemplated, the supplier should be consulted.

MECHANICAL DATA

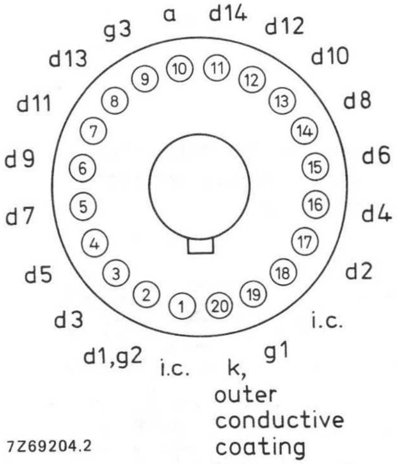

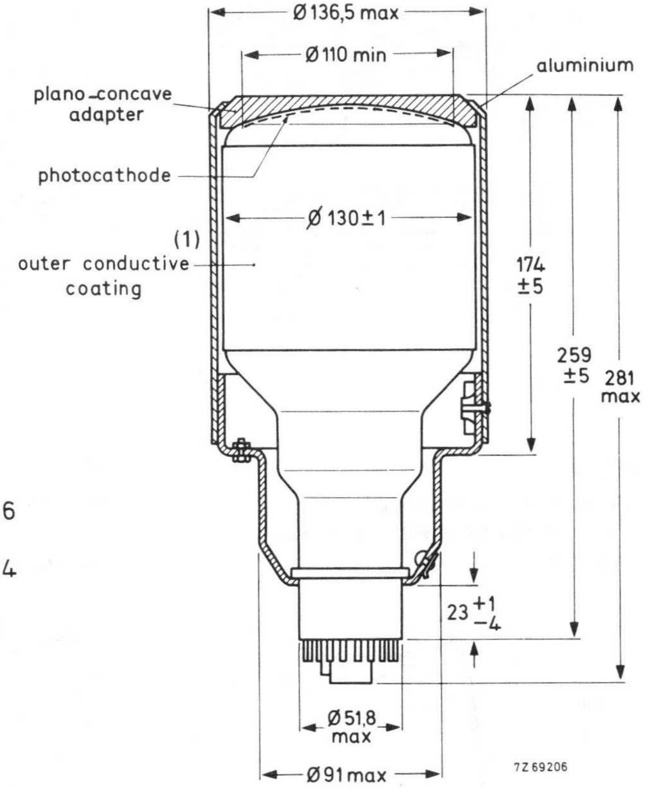

Fig. 5 Care should be taken in handling this larger diameter tube because of the risk of implosion.

Base: 20-pin (JEDEC B20-102)

Net mass: 1340 g

Optical coupling silicone grease is supplied with each tube. The grease should be applied to the adapter-photomultiplier interface before operation.

ACCESSORIES

Socket	type FE1020

The XP2041 may be used with the base assembly S563, see separate data sheet.

---

(1) The envelope of the tube is covered with a conductive coating, connected to the cathode. Take care to avoid electric shock. See also note 1.

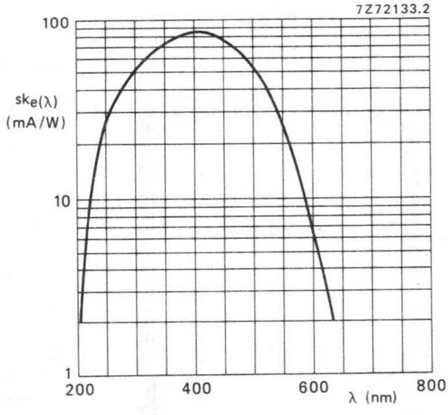

Fig. 6

Spectral sensitivity characteristic (without adapter or with fused silica adapter).

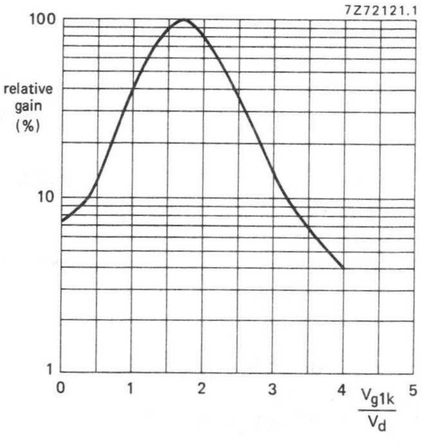

Fig. 7

Relative gain as a function of the voltage between focusing electrode g1 and photocathode, normalized to V_d.

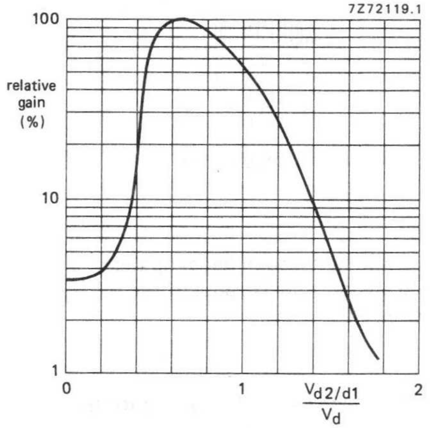

Fig. 8

Relative gain as a function of the voltage between d2 and d1, normalized to V_d.

$V_{d3/d1}$ constant.

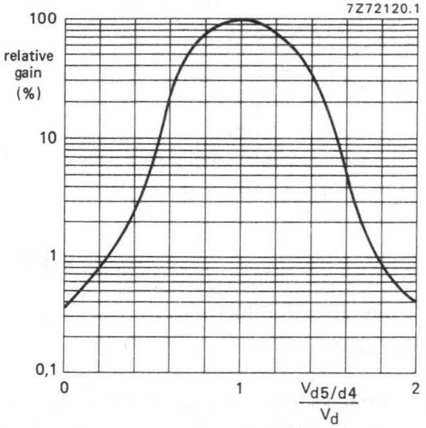

Fig. 9

Relative gain as a function of the voltage between d5 and d4, normalized to V_d ; $V_{d6/d4}$ constant.

Note: Gain regulation by changing the voltage between d5 and d4 may cause a degradation of other parameters such as stability and linearity.

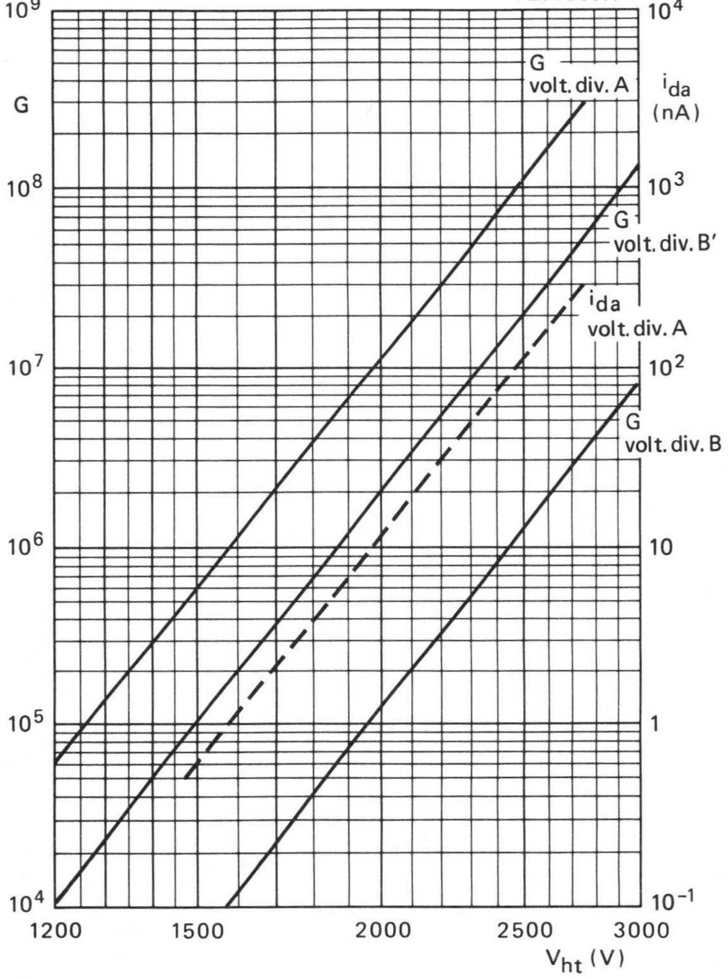

Fig. 10.

Gain, G, and anode dark current, i_{da}, as a function of supply voltage V_{ht}.

10-STAGE VENETIAN BLIND PHOTOMULTIPLIER TUBE

- 110 mm useful diameter head-on type
- flat window
- semi-transparent bialkaline type D photocathode
- for high-energy physics, e.g. large dimensional Cerenkov counters, leadglass walls, etc.

QUICK REFERENCE DATA

Spectral sensitivity characteristic	type D
Useful diameter of the photocathode	> 110 mm
Quantum efficiency at 400 nm	95 mA/W
Supply voltage for an anode spectral sensitivity of 12 kA/W at 400 nm	1270 V
Pulse amplitude resolution (^{137}Cs)	≈ 7,5 %
Mean anode sensitivity deviation	≈ 1 %

To be read in conjunction with *General Operational Recommendations Photomultiplier tubes.*

GENERAL CHARACTERISTICS

Window

Material	borosilicate
Shape	plano-plano
Refractive index at 550 nm	1,48

Photocathode *

Semi-transparent, head-on

Material	Sb K Cs
Useful diameter	> 110 mm
Spectral sensitivity characteristic (Fig. 4)	type D
Maximum spectral sensitivity at	400 ± 30 nm
Quantum efficiency at 400 nm	29 %
Spectral sensitivity at 400 nm	typ. 95 mA/W > 65 mA/W

---

* The bialkaline photocathode has a significant resistance which increases rapidly with reducing temperature. It is thus recommended that it should not be subjected to light of too great an intensity; the cathode current should be limited, for example, to 1 nA at room temperature or 0,1 nA at −30 °C. If too high a photocurrent is passed, the cathode can no longer be considered to be an equipotential surface, and the focusing of electrons onto the first dynode will be affected, resulting in departure of linearity.

Multiplier system

Number of stages	10
Dynode structure	venetian blind
Dynode material	Cu Be
Capacitances	
anode to final dynode	≈ 7 pF
anode to all	≈ 8,5 pF

Magnetic field

When the cathode is illuminated uniformly the anode current is halved (at V_{ht} = 1500 V) at a magnetic flux density of 0,2 mT perpendicular to the tube axis.

It is recommended that the tube be screened against the influence of magnetic fields by a mu-metal shield protruding > 15 mm beyond the photocathode.

RECOMMENDED CIRCUITS

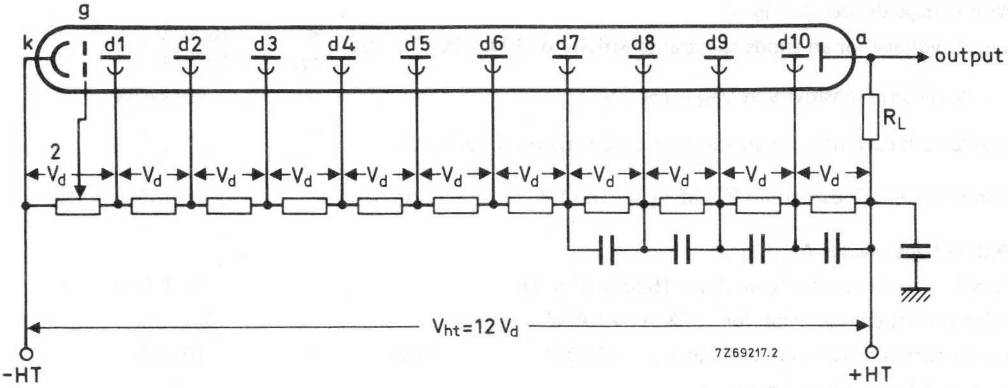

Fig. 1 Voltage divider A.

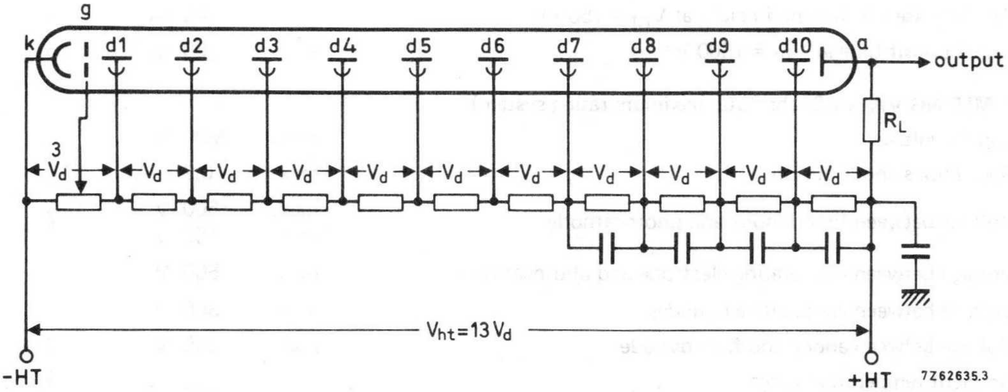

Fig. 2 Voltage divider A_1.

Typical values of capacitors: 10 nF; k = cathode; g = accelerating electrode; d_n = dynode no.; a = anode; R_L = load resistor.

The accelerating electrode potential should be adjusted for optimum pulse amplitude resolution.

TYPICAL CHARACTERISTICS

Note: All spectral sensitivities refer to a wavelength of 400 nm.

					notes
With voltage divider A (Fig. 1)					1
Supply voltage for an anode spectral sensitivity of 12 kA/W (Fig. 7)		$<$ typ.	1500 1270	V V	
→ Anode spectral sensitivity at V_{ht} = 1500 V		≈	40	kA/W	
Anode dark current at an anode spectral sensitivity of 12 kA/W		$<$ typ.	5 0,5	nA nA	2
Anode current linear within 2 % at V_{ht} = 1500 V	up to	≈	10	mA	
With voltage divider A_1 (Fig. 2)					
Anode spectral sensitivity at V_{ht} = 1500 V (Fig. 7)		≈	25	kA/W	
Pulse amplitude resolution for ^{137}Cs at 12 kA/W		≈	7,5	%	3
Anode current linear within 2% at V_{ht} = 1500 V	up to	≈	10	mA	
Mean anode sensitivity deviation					4
long term (16 h)		≈	1	%	
after change of count rate		≈	1	%	
Anode pulse rise time at V_{ht} = 1500 V		≈	16	ns	5
Anode pulse width at half height at V_{ht} = 1500 V		≈	40	ns	5
Signal transit time at V_{ht} = 1500 V		≈	90	ns	5

LIMITING VALUES (absolute maximum rating system)

Supply voltage	max.	2000	V	6
Continuous anode current	max.	0,2	mA	10
Voltage between first dynode and photocathode	max. min.	500 150	V V	7
Voltage between accelerating electrode and photocathode	max.	500	V	
Voltage between consecutive dynodes	max.	300	V	
Voltage between anode and final dynode	max.	300	V	8
Ambient temperature range				9
operational (for short periods of time)	max. min.	+80 −30	°C °C	
continuous operation and storage	max. min.	+50 −30	°C °C	

Notes

1. Wherever possible, the power supply should be arranged so that the cathode is earthed and the anode is at + HT, however, it is sometimes necessary to supply the tube with the anode earthed and the cathode at −HT. Under these circumstances, erratic noise and dark current are generally increased and unstable, particularly after application of voltage. The glass envelope of the tube should be supported only by insulators having an insulation resistance of $> 10^{15}$ ohm.
2. Dark current is measured at ambient temperature, after the tube has been in darkness for approx. 1 min. Lower values can be obtained after a longer stabilization period in darkness (approx. 30 min).
3. Pulse amplitude resolution for ^{137}Cs and ^{57}Co is measured with an NaI (Tl) cylindrical scintillator (Quartz et Silice serial no. 4170 or equivalent) with a diameter of 75 mm and a height of 75 mm. The count rate used is $\approx 10^4$ c/s.
4. The mean anode sensitivity deviation is measured by coupling an NaI (Tl) scintillator to the window of the tube. Long-term (16 h) deviation is measured by placing a ^{137}Cs source at a distance from the scintillator such that the count rate is $\approx 10^4$ c/s, corresponding to an anode current of $\approx$ 300 nA. Mean anode sensitivity deviation after change of count rate is measured with a ^{137}Cs source at a distance from the scintillator such that the count rate can be changed from $\approx 10^4$ c/s to $\approx 10^3$ c/s, corresponding to anode currents of ≈ 1 μA and $\approx 0{,}1$ μA respectively. Both tests are carried out according to ANSI-N42-9-1972 of IEEE recommendations.
5. Measured with a pulsed light source, with a pulse duration (FWHM) of < 1 ns; the cathode being completely illuminated. The rise time is determined between 10% and 90% of the amplitude of the anode pulse. The signal transit time is measured between the instant at which the illuminating pulse at the cathode becomes maximum, and the instant at which the anode pulse attains its maximum. Rise time, pulse duration and transit time vary as a function of high tension supply voltage V_{ht} approximately as $V_{ht}^{-1/2}$.
6. Total HT supply voltage, or the voltage at which the tube has an anode spectral sensitivity of $\approx$ 300 kA/W, whichever is lower.
7. Minimum value to obtain good collection in the input optics.
8. When calculating the anode voltage the voltage drop across the load resistor should be taken into account.
9. This range of temperatures is limited by stresses in the sealing layer of the base to the glass bulb. Where low temperature operation is contemplated, the supplier should be consulted.
10. A value of < 10 μA is recommended for applications requiring good stability.

MECHANICAL DATA

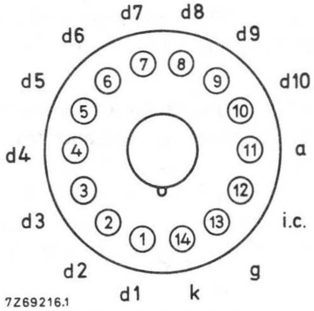

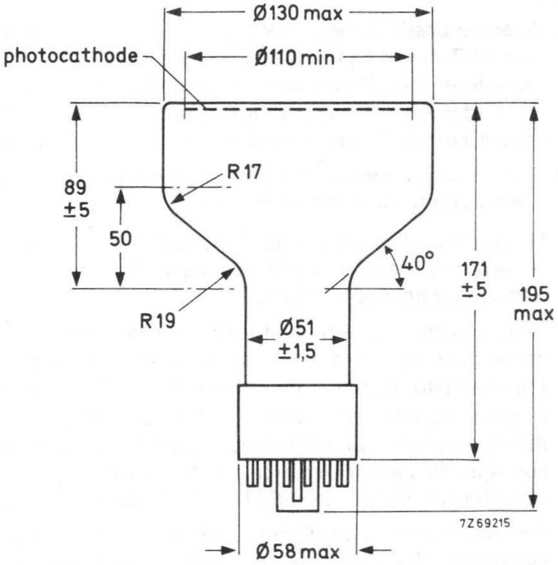

Fig. 3.

Base: IEC 67–1–16a (Jedec B14–38)

Net mass: 460 g

Care should be taken in handling this larger diameter tube because of the risk of implosion.

ACCESSORIES

Socket	type FE1014

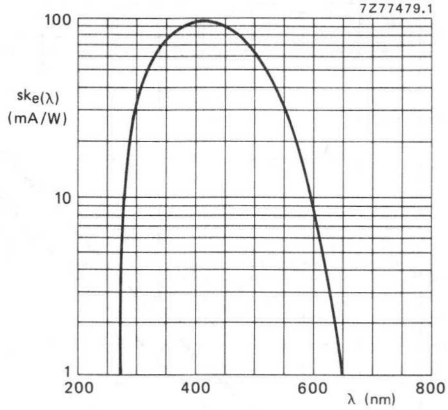

Fig. 4 Spectral sensitivity characteristic.

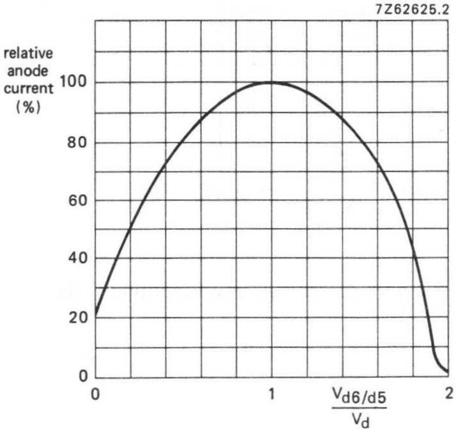

Fig. 5 Relative gain as a function of the voltage between d6 and d5 normalized to $V_d \cdot V_{d7/d5}$ constant. $V_d = 90$ V.

Note: Gain regulation by changing the voltage between d6 and d5 may cause a degradation of other parameters such as stability and linearity.

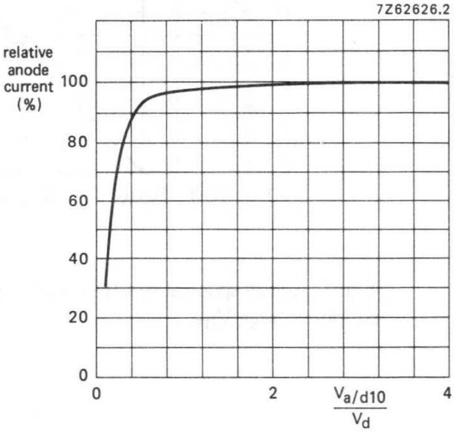

Fig. 6 Relative anode current as a function of the voltage between anode and final dynode. $V_d = 90$ V.

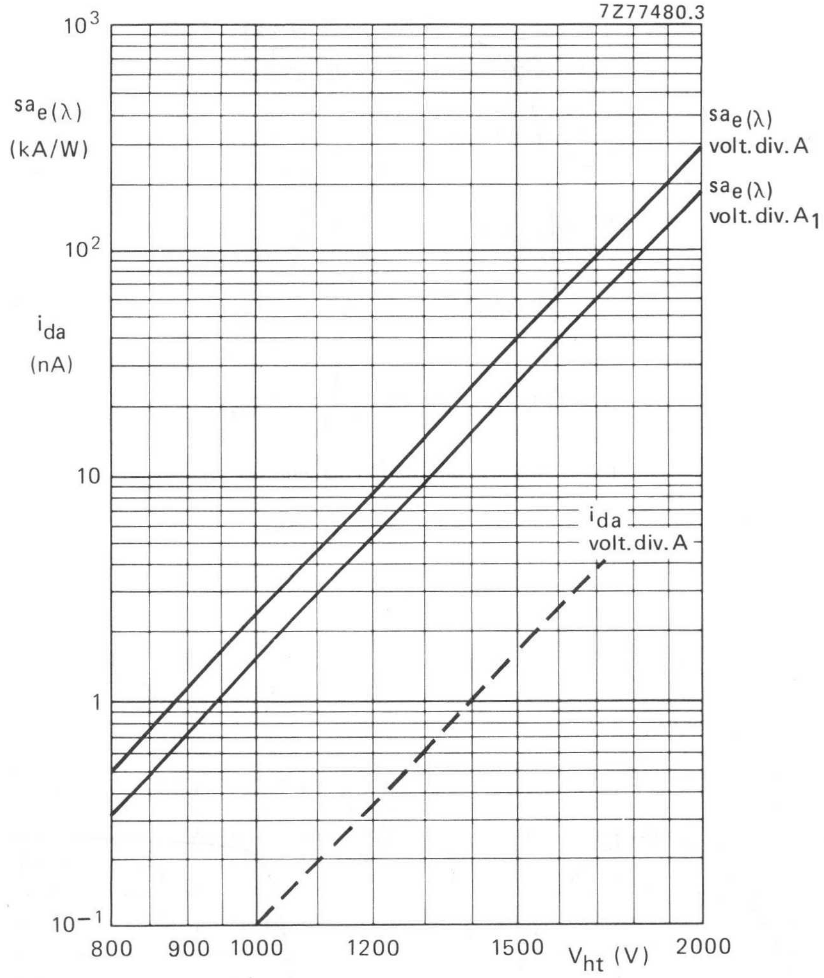

Fig. 7 Anode spectral sensitivity $sa_{e(\lambda)}$ and anode dark current i_{da} as a function of the supply voltage V_{ht}.

XP2062 replaces XP2061
XP2062B replaces XP2061B

10-STAGE PHOTOMULTIPLIER TUBE

- 34 mm useful diameter head-on type
- flat window
- semi-transparent bi-alkaline photocathode
- high stability
- good linearity
- for high-energy physics experiments, scintillation counting, laboratory and industrial photometry
- XP2062B has a 12-pin plastic base; XP2062 has a 14-pin all-glass base

QUICK REFERENCE DATA

Spectral sensitivity characteristic	Fig. 6
Useful diameter of the photocathode	> 34 mm
Cathode blue sensitivity	11,5 μA/lmF
Supply voltage for anode blue sensitivity = 7,5 A/lmF	1350 V
Pulse amplitude resolution for ^{137}Cs	≈ 7,2%
Pulse amplitude resolution for ^{55}Fe	≈ 42%
Mean anode sensitivity deviation	≈ 1%
Anode pulse rise time (with voltage divider B)	≈ 2,5 ns
Linearity (with voltage divider B)	up to ≈ 200 mA

To be read in conjunction with *General Operational Recommendations Photomultiplier Tubes.*

GENERAL CHARACTERISTICS

Window

Material	lime glass
Shape	plano-plano
Refractive index at 400 nm	1,54

Photocathode

Semi-transparent, head-on

Material	SbKCs	
Useful diameter	> 34 mm	
Spectral sensitivity characteristic	see Fig. 6	
Maximum spectral sensitivity	400 ± 30 nm	
Luminous sensitivity	70 μA/lm	note 2
Blue sensitivity	typ. 11,5 μA/lmF > 8,5 μA/lmF	note 1
Spectral sensitivity at 400 nm	≈ 90 mA/W	note 3

Electron optical input system

This system consists of: the photocathode (k), a metallized part of the glass envelope, internally connected to the photocathode and the accelerating electrode (g), internally connected to d1.

Multiplier system

Number of stages	10
Dynode structure	linear focused
Dynode material	CuBe
Capacitances	
anode to final dynode	≈ 3 pF
anode to all	≈ 5 pF

Magnetic field

When the photocathode is uniformly illuminated the anode current is halved (at V_{ht} = 1200 V, voltage divider A) at a magnetic flux density of:

- 0,6 mT in the direction of the longitudinal axis;
- 0,35 mT perpendicular to axis a (see Fig. 1);
- 0,15 mT parallel with axis a.

It is recommended that the tube be screened from magnetic fields by a mu-metal shield protruding > 15 mm beyond the photocathode.

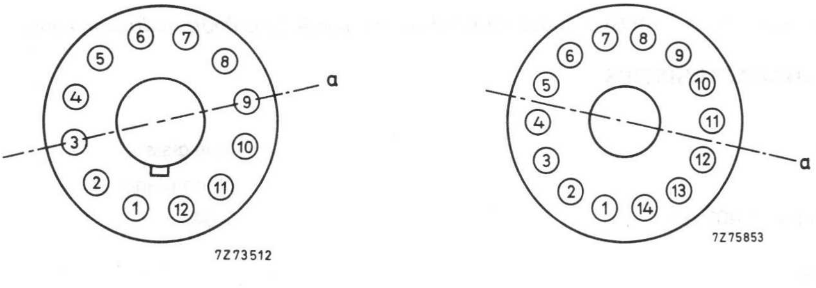

XP2062B XP2062

Fig. 1 Axis a with respect to base pins (bottom view).

RECOMMENDED CIRCUITS

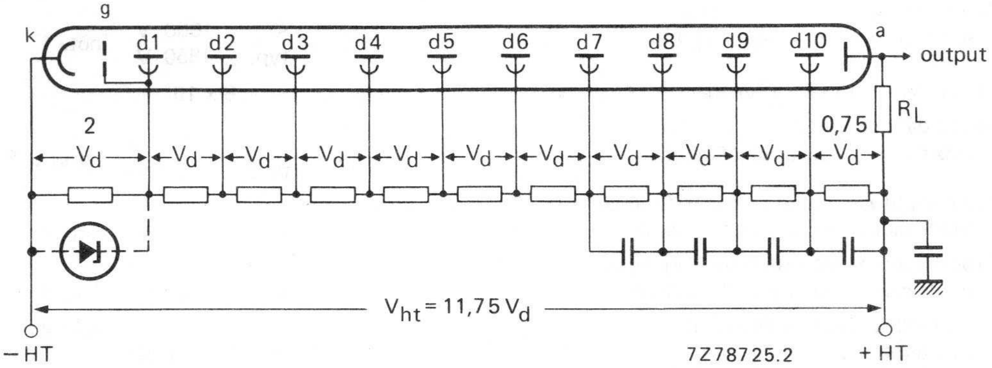

Fig. 2 Voltage divider A*.

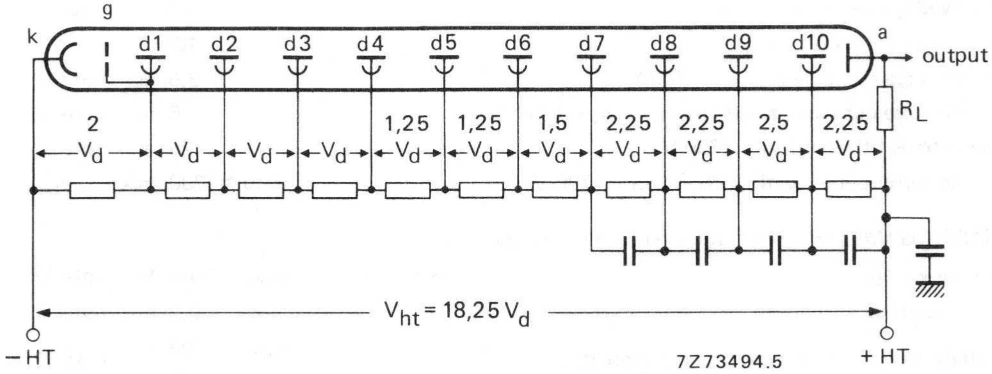

Fig. 3 Voltage divider B.

k = cathode;
g = accelerating electrode;
dn = dynode no.;
a = anode;
R_L = load resistor.

Typical values of capacitors: 10 nF

---

* For optimum peak amplitude resolution it is recommended that the voltage between first dynode and photocathode be maintained at ≈ 200 V e.g. by means of a voltage regulator diode.

TYPICAL CHARACTERISTICS

With voltage divider A (Fig. 2)				note 4
Supply voltage for an anode blue sensitivity of 7,5 A/lmF (Fig. 8)	< typ.	1600 1350	V V	note 1
Gain at V_{ht} = 1350 V (Fig. 9)	≈	8×10^5		
Anode dark current at an anode blue sensitivity of 7,5 A/lmF (Fig. 8)	< typ.	20 1	nA nA	notes 5, 6
Pulse amplitude resolution for ^{137}Cs at an anode blue sensitivity of 1,5 A/lmF	≈	7,2	%	note 7
Pulse amplitude resolution for ^{55}Fe at an anode blue sensitivity of 7,5 A/lmF	≈	42	%	note 8
Mean anode sensitivity deviation				note 9
long term	≈	1	%	
after change of count rate	≈	1	%	
Anode current linear within 2% at V_{ht} = 1350 V	up to ≈	40	mA	
With voltage divider B (Fig. 3)				note 4
Gain at V_{ht} = 1700 V (Fig. 9)	≈	7×10^5		
Anode pulse rise time at V_{ht} = 1700 V	≈	2,5	ns	note 10
Anode pulse duration at half height at V_{ht} = 1700 V	≈	6	ns	note 10
Signal transit time at V_{ht} = 1700 V	≈	26	ns	note 10
Anode current linear within 2% at V_{ht} = 1700 V	up to ≈	200	mA	

LIMITING VALUES (Absolute maximum rating system)

Supply voltage	max.	1800	V	note 11
Continuous anode current	max.	0,2	mA	note 12
Voltage between first dynode and photocathode	max. min.	500 150	V V	note 13
Voltage between consecutive dynodes	max.	300	V	
Voltage between anode and final dynode	max. min.	300 30	V V	note 14
Ambient temperature range				
Operational (for short periods of time)	max. min.	+ 80 −30	°C °C	note 15
Continuous operating and storage	max. min.	+ 50 −30	°C °C	

NOTES

1. Blue sensitivity, expressed in µA/lmF, is measured with a tungsten filament lamp with a colour temperature of 2856 ± 5K. Light is transmitted through a blue filter (Corning CS no. 5-58, polished to half stock thickness).
2. Luminous sensitivity is measured with a tungsten filament lamp with a colour temperature of 2856 ± 5K.
3. Spectral sensitivity is measured with a tungsten filament lamp with a colour temperature of 2856 ± 5K. Light is transmitted through an interferential filter. Spectral sensitivity at 400 nm, expressed in A/W, can be estimated by multiplying the blue sensitivity, expressed in A/lmF, by $7{,}7 \times 10^3$ for this type of tube.
4. To obtain a peak pulse current greater than that obtainable with divider A, it is necessary to increase the inter-dynode voltage of the stages progressively. Divider circuit B is an example of a "progressive" divider, giving a compromise between gain, speed, and linearity. Other dividers can be conceived to achieve other compromises. It is generally recommended that the increase in voltage between one stage and the next be kept less than a factor of 2.
5. Wherever possible, the power supply should be arranged so that the cathode is earthed and the anode is at +HT, however, it is sometimes necessary to supply the tube with the anode earthed and the cathode at −HT. Under these circumstances, erratic noise and dark current are generally increased and unstable, particularly immediately after application of voltage. The glass envelope of the tube should be supported only by insulators with an insulation resistance of $> 10^{15}\,\Omega$.
6. Dark current is measured at ambient temperature, after the tube has been in darkness for approx. 15 min.
7. Pulse amplitude resolution for ^{137}Cs is measured with an NaI (Tl) cylindrical scintillator (Quartz et Silice serial no. 2470 or equivalent) with a diameter of 32 mm and a height of 32 mm. The count rate used is $\approx 10^4$ c/s.
8. Pulse amplitude resolution for ^{55}Fe is measured with an NaI (Tl) cylindrical scintillator with a diameter of 25 mm and a height of 1 mm provided with a beryllium window. The count rate used is $\approx 2 \times 10^3$ c/s
9. The mean anode sensitivity deviation is measured by coupling an NaI (Tl) scintillator to the window of the tube. Long term (16 h) deviation is measured by placing a ^{137}Cs source at a distance from the scintillator such that the count rate is $\approx 10^4$ c/s corresponding to an average anode current of ≈ 300 nA.
   Anode sensitivity deviation after change of count rate is measured with a ^{137}Cs source at a distance of the scintillator such that the count rate can be changed from 10^4 c/s to 10^3 c/s corresponding to an average anode current of ≈ 1 µA and ≈ 0,1 µA respectively.
   Both tests are carried out according to ANSI–N42–9–1972 of IEEE recommendations.
10. Measured with a pulsed-light source, with a pulse duration (FWHM) of < 1 ns, the cathode being completely illuminated. The rise time is determined between 10% and 90% of the amplitude of the anode pulse. The signal transit time is measured between the instant at which the illuminating pulse at the cathode becomes maximum, and the instant at which the anode pulse attains its maximum. Rise time, pulse duration and transit time vary as a function of high tension supply voltage V_{ht}, approximately as $V_{ht}^{-1/2}$.
11. Total HT supply voltage or the voltage at which the tube has an anode blue sensitivity of 75 A/lmF (voltage given on test certificate for an anode blue sensitivity of 7,5 A/lmF, multiplied by 1,4), whichever is lower.
12. A value of < 10 µA is recommended for applications requiring good stability.
13. Minimum value to obtain good collection in the input optics.

NOTES (continued)

14. When calculating the anode voltage the voltage drop across the load resistor should be taken into account.
15. For type XP2062B this range of temperatures is limited principally by stresses in the sealing layer of the base to the glass bulb. Where low temperature operation is contemplated, the supplier should be consulted.

MECHANICAL DATA

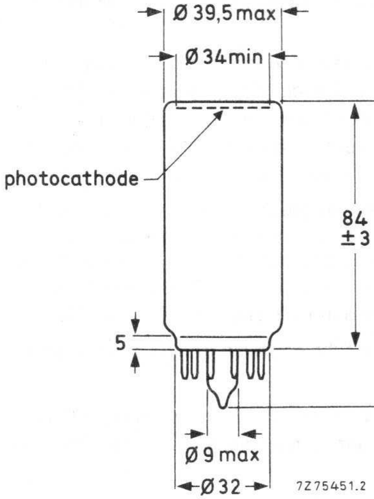

Fig. 4 XP2062

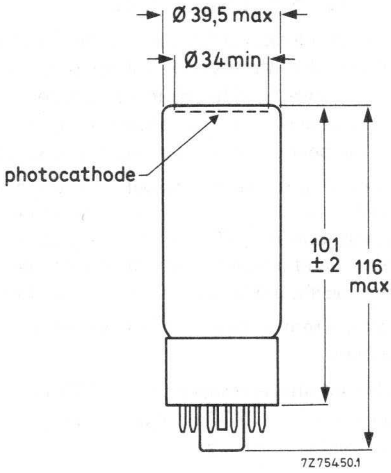

Fig. 5 XP2062B

Base	14-pin all glass
Net mass	51 g

Base	12-pin (JEDEC B12-43)
Net mass	69 g

PIN CONNECTIONS

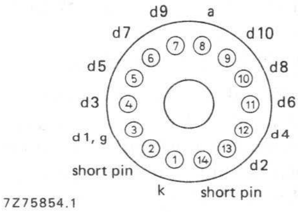

XP2062

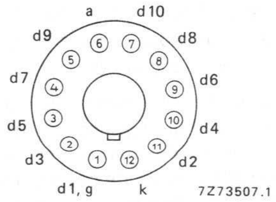

XP2062B

ACCESSORIES

Socket

for XP2062	type FE1112
for XP2062B	type FE1012

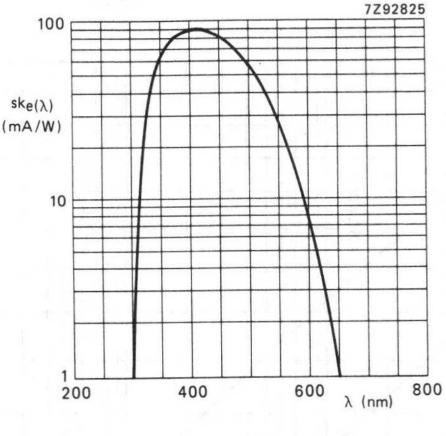

Fig. 6 Spectral sensitivity characteristic.

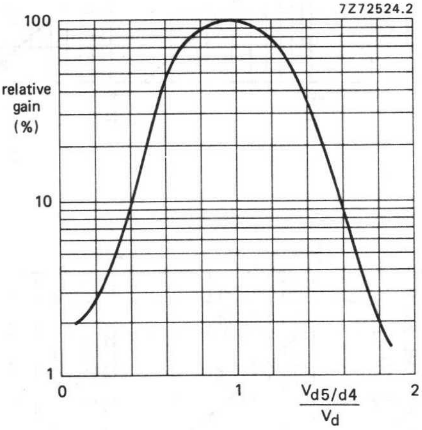

Fig. 7 Relative gain as a function of the voltage between d5 and d4, normalized to V_d; $V_{d6/d4}$ constant.

Note: Gain regulation by changing the voltage between d5 and d4 may cause a degradation of other parameters such as stability and linearity.

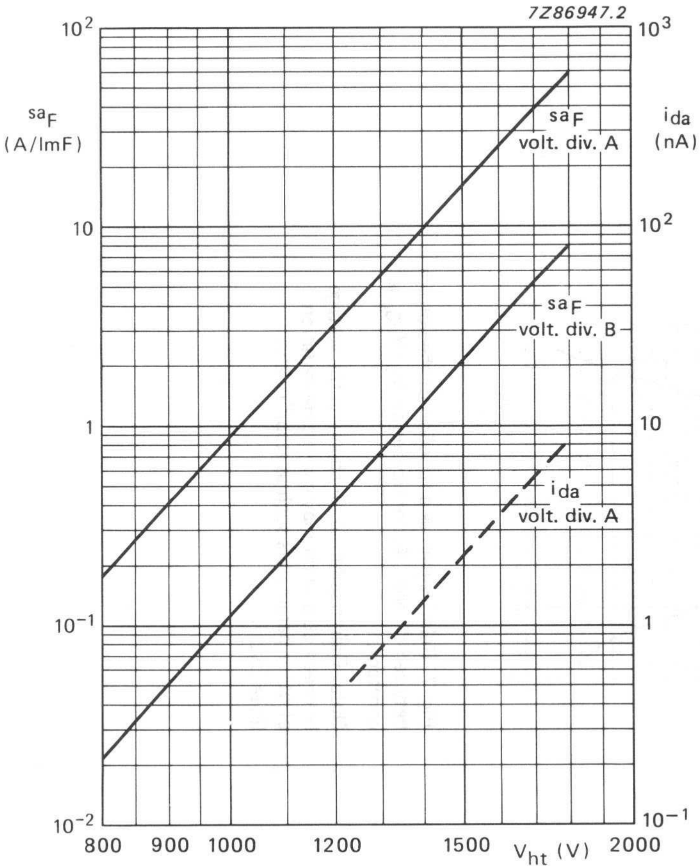

Fig. 8 Anode blue sensitivity, sa_F, and anode dark current i_{da}, as a function of supply voltage V_{ht}; i_{da} is given as a dotted line to indicate its principle behaviour only.

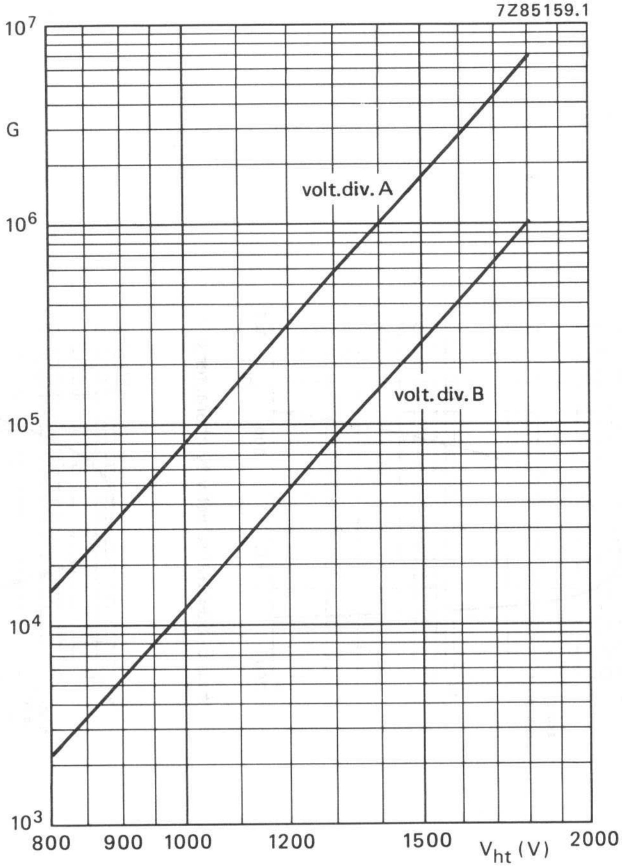

Fig. 9 Gain G as a function of supply voltage V_{ht}.

XP2071
XP2071B

XP2071 replaces XP2011
XP2071B replaces XP2011B
in preparation for green sensitivity applications: XP2081, XP2081B

10-STAGE PHOTOMULTIPLIER TUBES

- 34 mm useful diameter head-on type
- flat window
- semi-transparent bi-alkaline photocathode
- high stability
- good linearity
- for high-energy physics experiments, scintillation counting, laboratory and industrial photometry
- XP2071B has a 12-pin plastic base; XP2071 has a 14-pin all-glass base

QUICK REFERENCE DATA

Spectral sensitivity characteristic	Fig. 6
Useful diameter of the photocathode	> 34 mm
Cathode blue sensitivity	11,5 μA/lmF
Supply voltage for anode blue sensitivity = 7,5 A/lmF	1250 V
Pulse amplitude resolution for ^{137}Cs	≈ 7,2%
Pulse amplitude resolution for ^{55}Fe	≈ 43%
Mean anode sensitivity deviation	≈ 1%
Anode pulse rise time	≈ 2,5 ns
Linearity (with voltage divider B)	up to ≈ 200 mA

To be read in conjunction with *General Operational Recommendations Photomultiplier Tubes.*

GENERAL CHARACTERISTICS

		notes
Window		
Material	lime glass	
Shape	plano-plano	
Refractive index at 400 nm	1,54	
Photocathode		1
Semi-transparent, head-on		
Material	SbKCs	
Useful diameter	> 34 mm	
Spectral sensitivity characteristic	see Fig. 6	
Maximum spectral sensitivity	400 ± 30 nm	
Luminous sensitivity	≈ 70 μA/lm	3
Blue sensitivity	typ. 11,5 μA/lmF > 8,5 μA/lmF	2
Spectral sensitivity at 400 nm	≈ 90 mA/W	4

Electron optical input system

This system consists of: the photocathode (k), a metallized part of the glass envelope, internally connected to the photocathode and the accelerating electrode (g), internally connected to d1.

Multiplier system

Number of stages	10
Dynode structure	linear focused
Dynode material	CuBe
Capacitances	
anode to final dynode	≈ 3 pF
anode to all	≈ 5 pF

Magnetic field

When the photocathode is uniformly illuminated the anode current is halved (at $V_{ht} = 1200$ V, voltage divider A) at a magnetic flux density of:
- 0,6 mT in the direction of the longitudinal axis;
- 0,35 mT perpendicular to axis a (see Fig. 1);
- 0,15 mT parallel with axis a.

It is recommended that the tube be screened from magnetic fields by a mu-metal shield protruding > 15 mm beyond the photocathode.

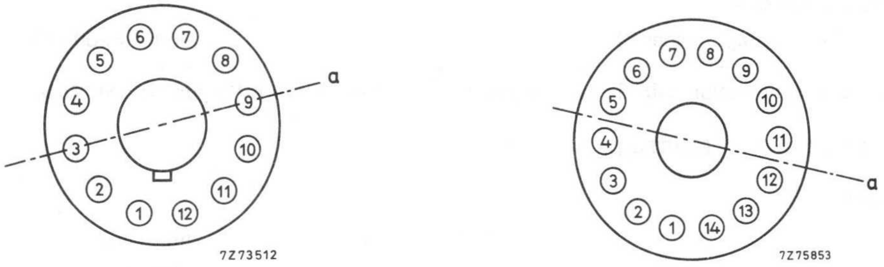

XP2071B

XP2071

Fig. 1 Axis a with respect to base pins (bottom view).

RECOMMENDED CIRCUITS

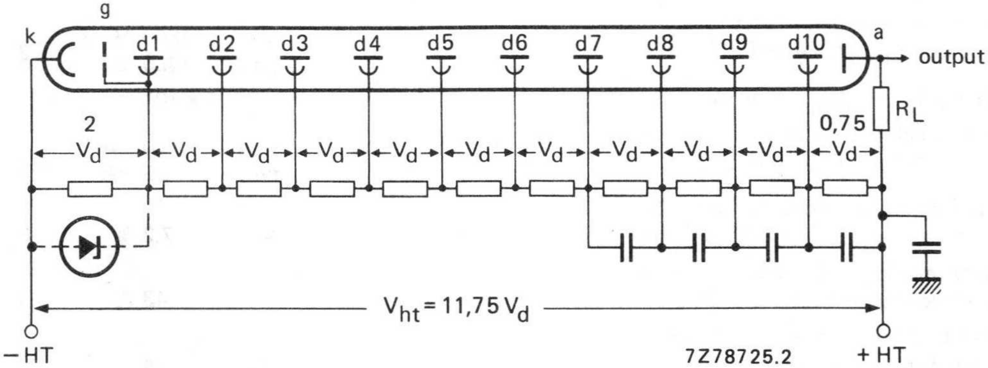

Fig. 2 Voltage divider A.

For optimum peak amplitude resolution it is recommended that the voltage between first dynode and photocathode be maintained at ≈ 200 V e.g. by means of a voltage regulator diode.

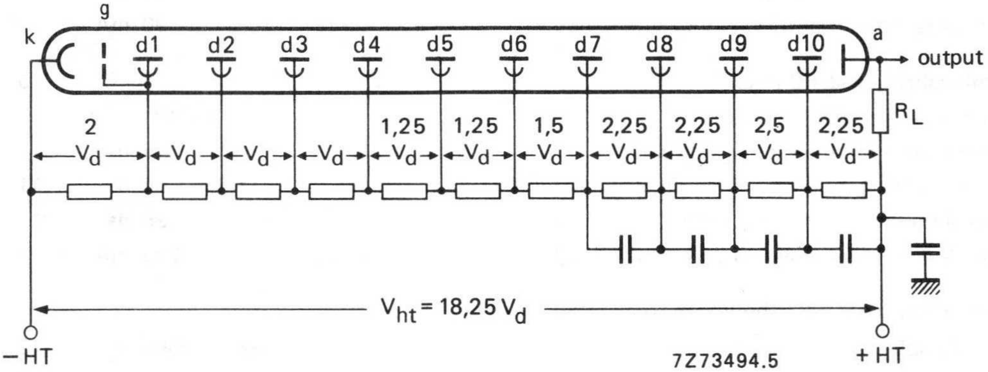

Fig. 3 Voltage divider B.

k = cathode;

g = accelerating electrode;

dn = dynode no.;

a = anode;

R_L = load resistor.

Typical values of capacitors: 10 nF

TYPICAL CHARACTERISTICS

					notes
With voltage divider A (Fig. 2)					5
Supply voltage for an anode blue sensitivity of 7,5 A/lmF (Fig. 8)		<	1600	V	2
		typ.	1250	V	
Gain at V_{ht} = 1250 V (Fig. 9)		≈	7×10^5		
Anode dark current at an anode blue sensitivity of 7,5 A/lmF (Fig. 8)		<	20	nA	6,7
		typ.	1,5	nA	
Pulse amplitude resolution for ^{137}Cs at an anode blue sensitivity of 1,5 A/lmF		≈	7,2	%	8
Pulse amplitude resolution for ^{55}Fe at an anode blue sensitivity of 7,5 A/lmF		≈	43	%	9
Peak-to-valley ratio for ^{55}Fe at an anode blue sensitivity of 7,5 A/lmF		≈	34		
Mean anode sensitivity deviation					10
long term (16 h)		≈	1	%	
after change of count rate		≈	1	%	
Anode pulse rise time at V_{ht} = 1250 V		≈	2,5	ns	11
Anode pulse duration at half height at V_{ht} = 1250 V		≈	6	ns	11
Signal transit time at V_{ht} = 1250 V		≈	30	ns	11
Anode current linear within 2% at V_{ht} = 1600 V	up to	≈	90	mA	
With voltage divider B (Fig. 3)					5
Gain at V_{ht} = 1700 V (Fig. 9)		≈	1×10^6		
Anode pulse rise time at V_{ht} = 1700 V		≈	2,5	ns	11
Anode pulse duration at half height at V_{ht} = 1700 V		≈	6	ns	11
Signal transit time at V_{ht} = 1700 V		≈	26	ns	11
Anode current linear within 2% at V_{ht} = 1700 V	up to	≈	200	mA	

LIMITING VALUES (Absolute maximum rating system)

Supply voltage	max.	1800	V	12
Continuous anode current	max.	0,2	mA	13
Voltage between first dynode and photocathode	max.	500	V	14
	min.	150	V	
Voltage between consecutive dynodes	max.	300	V	
Voltage between anode and final dynode	max.	300	V	15
	min.	30	V	
Ambient temperature range				
Operational (for short periods of time)	max.	+80	°C	16
	min.	−30	°C	
Continuous operating and storage	max.	+50	°C	
	min.	−30	°C	

Notes

1. The bi-alkaline photocathode has a significant resistance which increases rapidly with reducing temperature. It is thus recommended that it should not be subjected to light of too great an intensity; the cathode current should be limited, for example, to 1 nA at room temperature or 0,1 nA at −30 °C. If too high a photocurrent is passed, the cathode can no longer be considered to be an equipotential surface, and the focusing of electrons onto the first dynode will be affected, resulting in departures of linearity.
2. Blue sensitivity, expressed in μA/lmF, is measured with a tungsten filament lamp with a colour temperature of 2856 ± 5K. Light is transmitted through a blue filter (Corning CS no. 5-58, polished to half stock thickness).
3. Luminous sensitivity is measured with a tungsten filament lamp with a colour temperature of 2856 ± 5K.
4. Spectral sensitivity is measured with a tungsten filament lamp with a colour temperature of 2856 ± 5K. Light is transmitted through an interferential filter. Spectral sensitivity at 400 nm, expressed in A/W, can be estimated by multiplying the blue sensitivity, expressed in A/lmF, by $7{,}7 \times 10^3$ for this type of tube.
5. To obtain a peak pulse current greater than that obtainable with divider A, it is necessary to increase the inter-dynode voltage of the stages progressively. Divider circuit B is an example of a "progressive" divider, giving a compromise between gain, speed, and linearity. Other dividers can be conceived to achieve other compromises. It is generally recommended that the increase in voltage between one stage and the next be kept less than a factor of 2.
6. Wherever possible, the power supply should be arranged so that the cathode is earthed and the anode is at +HT, however, it is sometimes necessary to supply the tube with the anode earthed and the cathode at −HT. Under these circumstances, erratic noise and dark current are generally increased and unstable, particularly immediately after application of voltage. The glass envelope of the tube should be supported only by insulators with an insulation resistance of $> 10^{15}\ \Omega$.
7. Dark current is measured at ambient temperature, after the tube has been in darkness for approx. 1 min. Lower values can be obtained after a longer stabilization period in darkness (approx. 30 min).
8. Pulse amplitude resolution for ^{137}Cs is measured with an NaI (Tl) cylindrical scintillator (Quartz et Silice serial no. 2470 or equivalent) with a diameter of 32 mm and a height of 32 mm. The count rate used is $\approx 10^4$ c/s.
9. Pulse amplitude resolution for ^{55}Fe is measured with an NaI (Tl) cylindrical scintillator with a diameter of 25 mm and a height of 1 mm provided with a beryllium window. The count rate used is $\approx 2 \times 10^3$ c/s.
10. The mean anode sensitivity deviation is measured by coupling an NaI (Tl) scintillator to the window of the tube. Long term (16 h) deviation is measured by placing a ^{137}Cs source at a distance from the scintillator such that the count rate is $\approx 10^4$ c/s corresponding to an average anode current of $\approx$ 300 nA.
    Anode sensitivity deviation after change of count rate is measured with a ^{137}Cs source at a distance of the scintillator such that the count rate can be changed from 10^4 c/s to 10^3 c/s corresponding to an average anode current of $\approx 1\ \mu$A and $\approx 0{,}1\ \mu$A respectively.
    Both tests are carried out according to ANSI—N42—9—1972 of IEEE recommendations.
11. Measured with a pulsed-light source, with a pulse duration (FWHM) of < 1 ns, the cathode being completely illuminated. The rise time is determined between 10% and 90% of the amplitude of the anode pulse. The signal transit time is measured between the instant at which the illuminating pulse at the cathode becomes maximum, and the instant at which the anode pulse attains its maximum. Rise time, pulse duration and transit time vary as a function of high tension supply voltage V_{ht}, approximately as $V_{ht}^{-1/2}$.

Notes (continued)

12. Total HT supply voltage or the voltage at which the tube has an anode blue sensitivity of 75 A/lmF (voltage given on test certificate for an anode blue sensitivity of 7,5 A/lmF, multiplied by 1,4), whichever is lower.
13. A value of < 10 μA is recommended for applications requiring good stability.
14. Minimum value to obtain good collection in the input optics.
15. When calculating the anode voltage the voltage drop across the load resistor should be taken into account.
16. For type XP2071B this range of temperatures is limited principally by stresses in the sealing layer of the base to the glass bulb. Where low temperature operation is contemplated, the supplier should be consulted.

MECHANICAL DATA

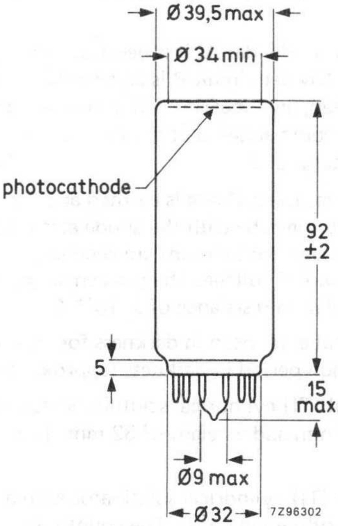

Base 14-pin all glass
Net mass 54 g

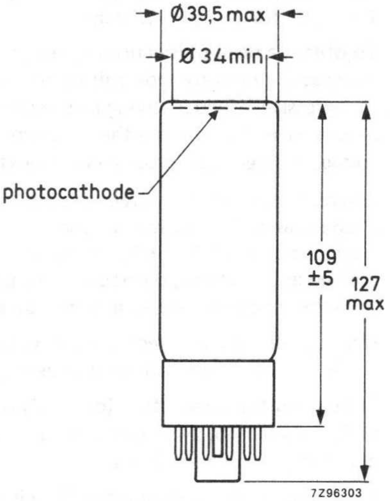

Base 12-pin (JEDEC B12-43)
Net mass 72 g

PIN CONNECTIONS

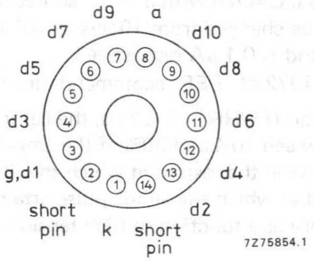

Fig. 4 XP2071.

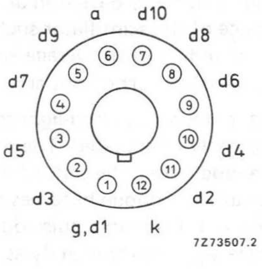

Fig. 5 XP2071B.

ACCESSORIES

Socket:

for XP2071 : FE1112
for XP2071B : FE1012

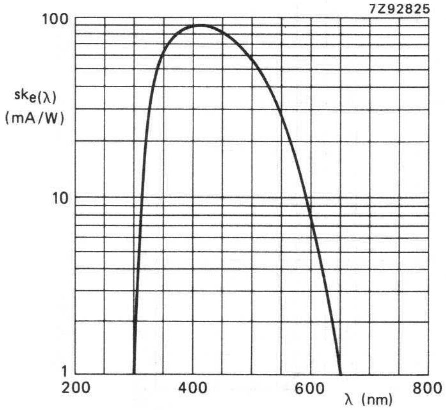

Fig. 6 Spectral sensitivity characteristic.

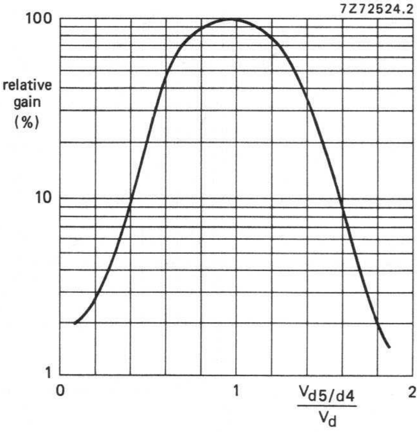

Fig. 7 Relative gain as a function of the voltage between d5 and d4, normalized to V_d; $V_{d6/d4}$ constant.

Note: Gain regulation by changing the voltage between d5 and d4 may cause a degradation of other parameters such as stability and linearity.

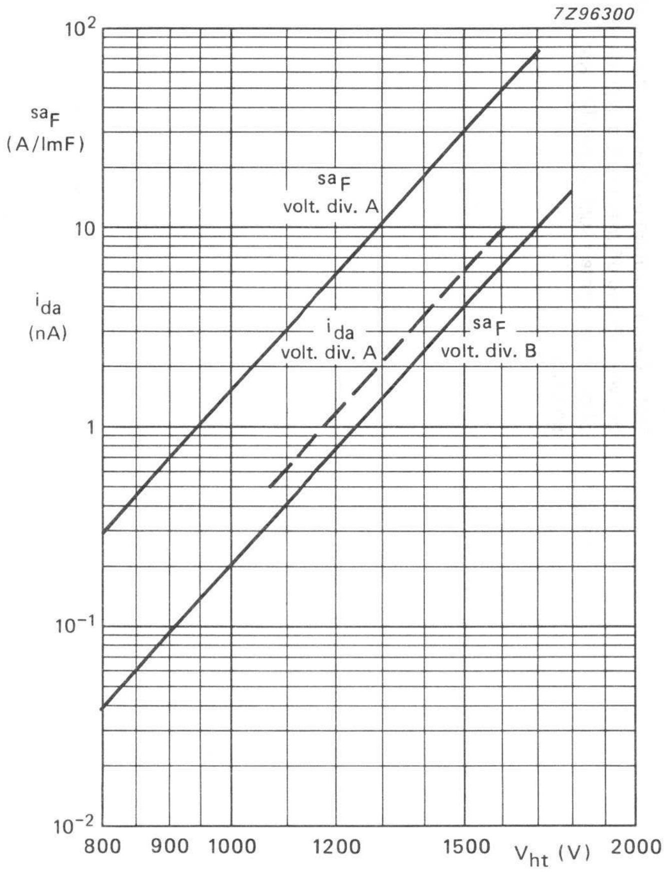

Fig. 8 Anode blue sensitivity, sa_F, and anode dark current i_{da}, as a function of supply voltage V_{ht}; i_{da} is given as a dotted line to indicate its principle behaviour only.

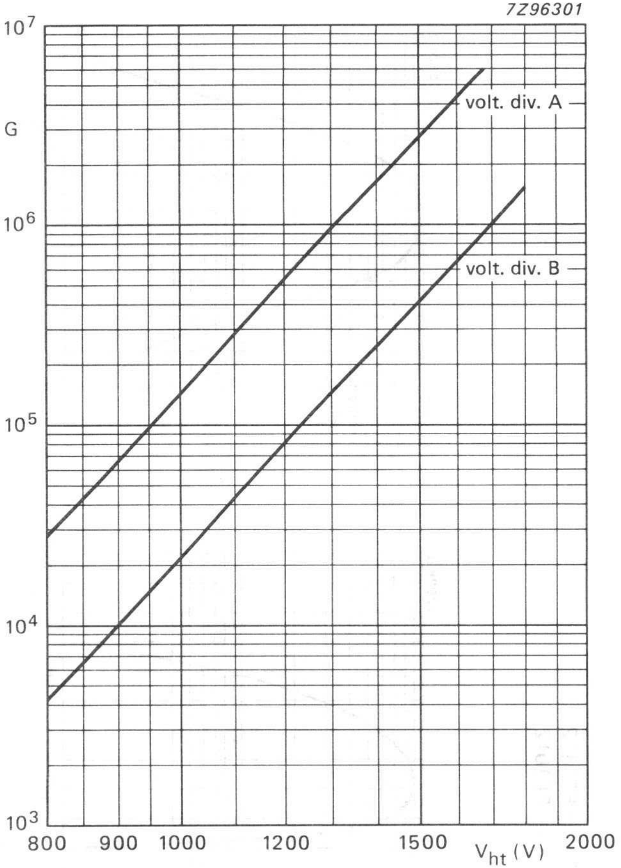

Fig. 9 Gain G as a function of supply voltage V_{ht}.

XP2072 replaces XP2012
XP2072B replaces XP2012B

10-STAGE PHOTOMULTIPLIER TUBE

- 34 mm useful diameter head-on type
- flat window
- semi-transparent bi-alkaline photocathode
- high stability
- good linearity
- for high-energy physics experiments, scintillation counting, laboratory and industrial photometry
- XP2072B has a 12-pin plastic base; XP2072 has a 14-pin all-glass base

QUICK REFERENCE DATA

Spectral sensitivity characteristic	Fig. 6
Useful diameter of the photocathode	> 34 mm
Cathode blue sensitivity	12,5 μA/lmF
Supply voltage for anode blue sensitivity = 7,5 A/lmF	1250 V
Pulse amplitude resolution for ^{137}Cs	≈ 7,2%
Pulse amplitude resolution for ^{55}Fe	≈ 39%
Mean anode sensitivity deviation	≈ 1%
Anode pulse rise time	≈ 2,5 ns
Linearity (with voltage divider B)	up to ≈ 200 mA

To be read in conjunction with *General Operational Recommendations Photomultiplier Tubes.*

GENERAL CHARACTERISTICS

		notes
Window		
Material	lime glass	
Shape	plano-plano	
Refractive index at 400 nm	1,54	
Photocathode		1
Semi-transparent, head-on		
Material	SbKCs	
Useful diameter	> 34 mm	
Spectral sensitivity characteristic	see Fig. 6	
Maximum spectral sensitivity	400 ± 30 nm	
Luminous sensitivity	≈ 80 μA/lm	3
Blue sensitivity	typ. 12,5 μA/lmF > 10 μA/lmF	2
Spectral sensitivity at 400 nm	≈ 95 mA/W	4

Electron optical input system

This system consists of: the photocathode (k), a metallized part of the glass envelope, internally connected to the photocathode and the accelerating electrode (g), internally connected to d1.

Multiplier system

Number of stages	10
Dynode structure	linear focused
Dynode material	CuBe
Capacitances	
anode to final dynode	≈ 3 pF
anode to all	≈ 5 pF

Magnetic field

When the photocathode is uniformly illuminated the anode current is halved (at V_{ht} = 1200 V, voltage divider A) at a magnetic flux density of:
– 0,6 mT in the direction of the longitudinal axis;
– 0,35 mT perpendicular to axis a (see Fig. 1);
– 0,15 mT parallel with axis a.

It is recommended that the tube be screened from magnetic fields by a mu-metal shield protruding > 15 mm beyond the photocathode.

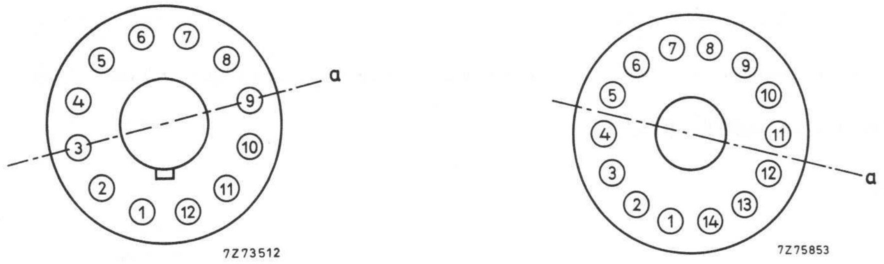

XP2072B

XP2072

Fig. 1 Axis a with respect to base pins (bottom view).

RECOMMENDED CIRCUITS

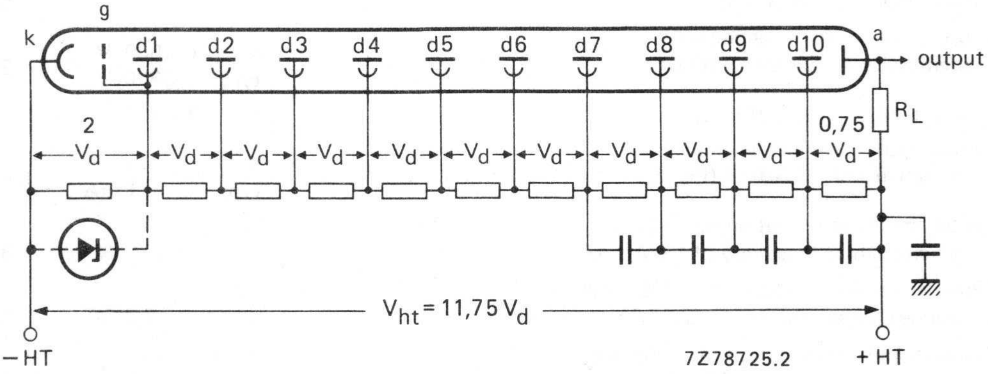

Fig. 2 Voltage divider A.

For optimum peak amplitude resolution it is recommended that the voltage between first dynode and photocathode be maintained at ≈ 200 V e.g. by means of a voltage regulator diode.

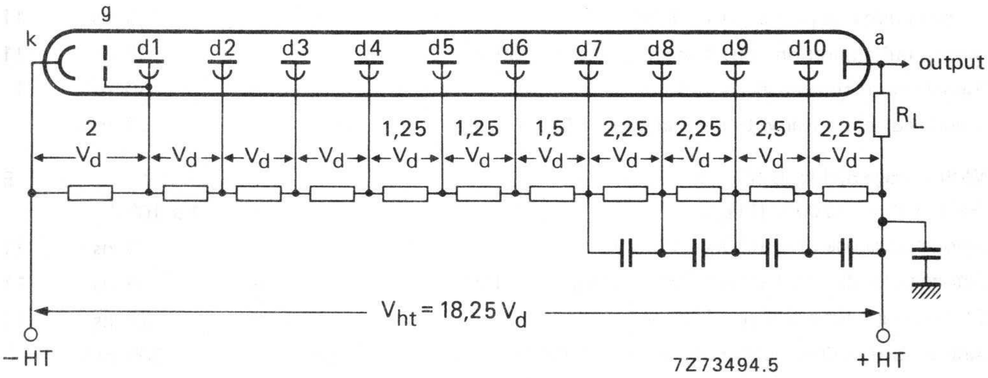

Fig. 3 Voltage divider B.

k = cathode;
g = accelerating electrode;
dn = dynode no.;
a = anode;
R_L = load resistor.

Typical values of capacitors: 10 nF

TYPICAL CHARACTERISTICS

					notes
With voltage divider A (Fig. 2)					5
Supply voltage for an anode blue sensitivity of 7,5 A/lmF (Fig. 8)		< typ.	1500 1230	V V	2
Gain at V_{ht} = 1230 V (Fig. 9)		≈	7 x 10^5		
Anode dark current at an anode blue sensitivity of 7,5 A/lmF (Fig. 8)		< typ.	10 1	nA nA	6,7
Pulse amplitude resolution for ^{57}Co at an anode blue sensitivity of 1,5 A/lmF			11,2	%	8
Pulse amplitude resolution for ^{137}Cs at an anode blue sensitivity of 1,5 A/lmF		≈	7,2	%	8
Pulse amplitude resolution for ^{55}Fe at an anode blue sensitivity of 7,5 A/lmF		≈	39	%	9
Peak-to-valley ratio for ^{55}Fe at an anode blue sensitivity of 7,5 A/lmF		≈	43		
Mean anode sensitivity deviation					10
long term (16 h)		≈	1	%	
after change of count rate		≈	1	%	
versus temperature between 0 and +40 °C at 450 nm		≈	0,2	%/K	
Anode pulse rise time at V_{ht} = 1250 V		≈	2,5	ns	11
Anode pulse duration at half height at V_{ht} = 1250 V		≈	6	ns	11
Signal transit time at V_{ht} = 1250 V		≈	30	ns	11
Anode current linear within 2% at V_{ht} = 1600 V	up to	≈	90	mA	
With voltage divider B (Fig. 3)					5
Gain at V_{ht} = 1700 V (Fig. 9)		≈	1 x 10^6		
Anode pulse rise time at V_{ht} = 1700 V		≈	2,5	ns	11
Anode pulse duration at half height at V_{ht} = 1700 V		≈	6	ns	11
Signal transit time at V_{ht} = 1700 V		≈	26	ns	11
Anode current linear within 2% at V_{ht} = 1700 V	up to	≈	200	mA	

LIMITING VALUES (Absolute maximum rating system)

Supply voltage	max.	1800	V	12
Continuous anode current	max.	0,2	mA	13
Voltage between first dynode and photocathode	max. min.	500 150	V V	14
Voltage between consecutive dynodes	max.	300	V	
Voltage between anode and final dynode	max. min.	300 30	V V	15
Ambient temperature range				
Operational (for short periods of time)	max. min.	+80 −30	°C °C	16
Continuous operating and storage	max. min.	+50 −30	°C °C	

Notes

1. The bi-alkaline photocathode has a significant resistance which increases rapidly with reducing temperature. It is thus recommended that it should not be subjected to light of too great an intensity; the cathode current should be limited, for example, to 1 nA at room temperature or 0,1 nA at −30 °C. If too high a photocurrent is passed, the cathode can no longer be considered to be an equipotential surface, and the focusing of electrons onto the first dynode will be affected, resulting in departures of linearity.
2. Blue sensitivity, expressed in μA/lmF, is measured with a tungsten filament lamp with a colour temperature of 2856 ± 5K. Light is transmitted through a blue filter (Corning CS no. 5-58, polished to half stock thickness).
3. Luminous sensitivity is measured with a tungsten filament lamp with a colour temperature of 2856 ± 5K.
4. Spectral sensitivity is measured with a tungsten filament lamp with a colour temperature of 2856 ± 5K. Light is transmitted through an interferential filter. Spectral sensitivity at 400 nm, expressed in A/W, can be estimated by multiplying the blue sensitivity, expressed in A/lmF, by $7{,}7 \times 10^3$ for this type of tube.
5. To obtain a peak pulse current greater than that obtainable with divider A, it is necessary to increase the inter-dynode voltage of the stages progressively. Divider circuit B is an example of a "progressive" divider, giving a compromise between gain, speed, and linearity. Other dividers can be conceived to achieve other compromises. It is generally recommended that the increase in voltage between one stage and the next be kept less than a factor of 2.
6. Wherever possible, the power supply should be arranged so that the cathode is earthed and the anode is at +HT, however, it is sometimes necessary to supply the tube with the anode earthed and the cathode at −HT. Under these circumstances, erratic noise and dark current are generally increased and unstable, particularly immediately after application of voltage. The glass envelope of the tube should be supported only by insulators with an insulation resistance of $> 10^{15}\ \Omega$.
7. Dark current is measured at ambient temperature, after the tube has been in darkness for approx. 1 min. Lower values can be obtained after a longer stabilization period in darkness (approx. 30 min).
8. Pulse amplitude resolution for ^{137}Cs and ^{57}Co is measured with an NaI (Tl) cylindrical scintillator (Quartz et Silice serial no. 2470 or equivalent) with a diameter of 32 mm and a height of 32 mm. The count rate used is $\approx 10^4$ c/s.
9. Pulse amplitude resolution for ^{55}Fe is measured with an NaI (Tl) cylindrical scintillator with a diameter of 25 mm and a height of 1 mm provided with a beryllium window. The count rate used is $\approx 2 \times 10^3$ c/s.
10. The mean anode sensitivity deviation is measured by coupling an NaI (Tl) scintillator to the window of the tube. Long term (16 h) deviation is measured by placing a ^{137}Cs source at a distance from the scintillator such that the count rate is $\approx 10^4$ c/s corresponding to an average anode current of $\approx$ 300 nA.
    Anode sensitivity deviation after change of count rate is measured with a ^{137}Cs source at a distance of the scintillator such that the count rate can be changed from 10^4 c/s to 10^3 c/s corresponding to an average anode current of $\approx 1\ \mu$A and $\approx 0{,}1\ \mu$A respectively.
    Both tests are carried out according to ANSI—N42—9—1972 of IEEE recommendations.
11. Measured with a pulsed-light source, with a pulse duration (FWHM) of < 1 ns, the cathode being completely illuminated. The rise time is determined between 10% and 90% of the amplitude of the anode pulse. The signal transit time is measured between the instant at which the illuminating pulse at the cathode becomes maximum, and the instant at which the anode pulse attains its maximum. Rise time, pulse duration and transit time vary as a function of high tension supply voltage V_{ht}, approximately as $V_{ht}^{-1/2}$.

DEVELOPMENT DATA

Notes (continued)

12. Total HT supply voltage or the voltage at which the tube has an anode blue sensitivity of 75 A/lmF (voltage given on test certificate for an anode blue sensitivity of 7,5 A/lmF, multiplied by 1,4), whichever is lower.
13. A value of < 10 μA is recommended for applications requiring good stability.
14. Minimum value to obtain good collection in the input optics.
15. When calculating the anode voltage the voltage drop across the load resistor should be taken into account.
16. For type XP2072B this range of temperatures is limited principally by stresses in the sealing layer of the base to the glass bulb. Where low temperature operation is contemplated, the supplier should be consulted.

MECHANICAL DATA

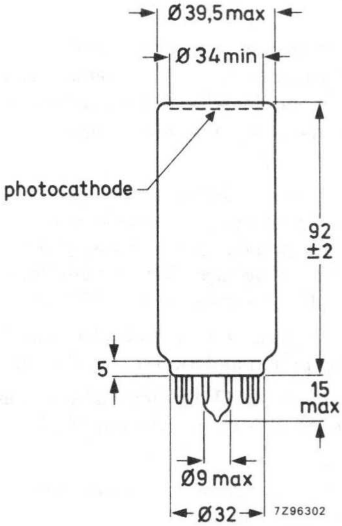

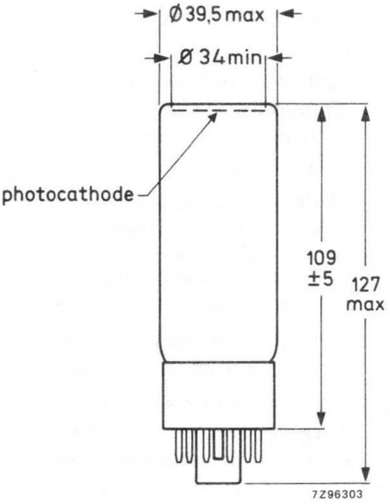

Base 14-pin all glass

Net mass 54 g

Base 12-pin (JEDEC B12-43)

Net mass 72 g

PIN CONNECTIONS

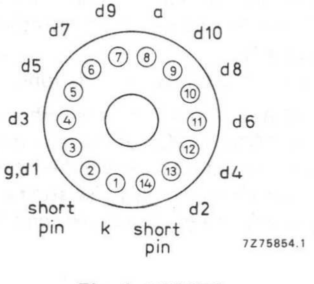

Fig. 4 XP2072.

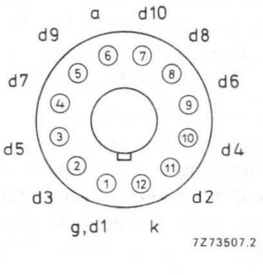

Fig. 5 XP2072B.

ACCESSORIES

Socket:
for XP2072 : FE1112
for XP2072B : FE1012

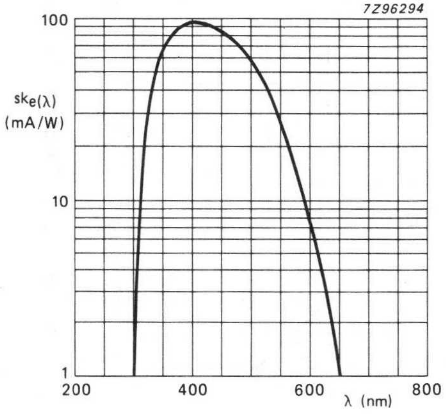

Fig. 6 Spectral sensitivity characteristic.

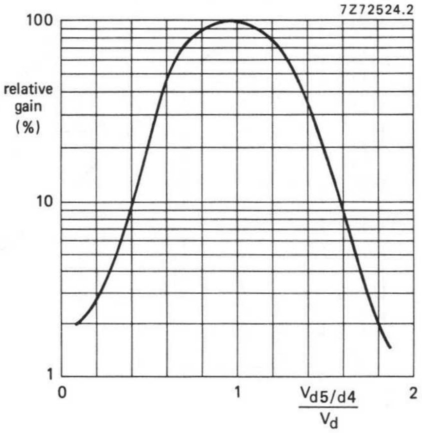

Fig. 7 Relative gain as a function of the voltage between d5 and d4, normalized to V_d; $V_{d6/d4}$ constant.

Note: Gain regulation by changing the voltage between d5 and d4 may cause a degradation of other parameters such as stability and linearity.

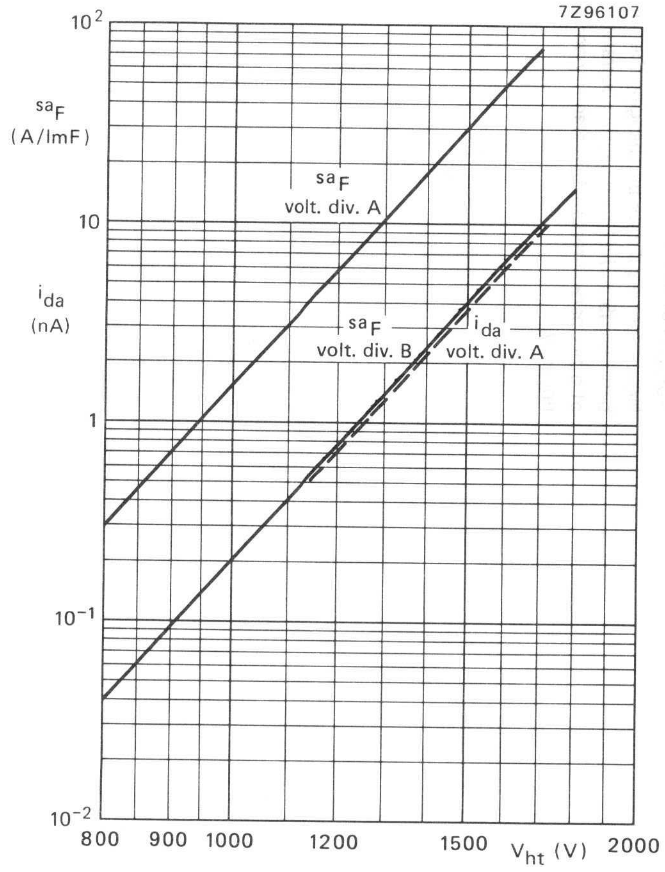

Fig. 8 Anode blue sensitivity, sa_F, and anode dark current i_{da}, as a function of supply voltage V_{ht}; i_{da} is given as a dotted line to indicate its principle behaviour only.

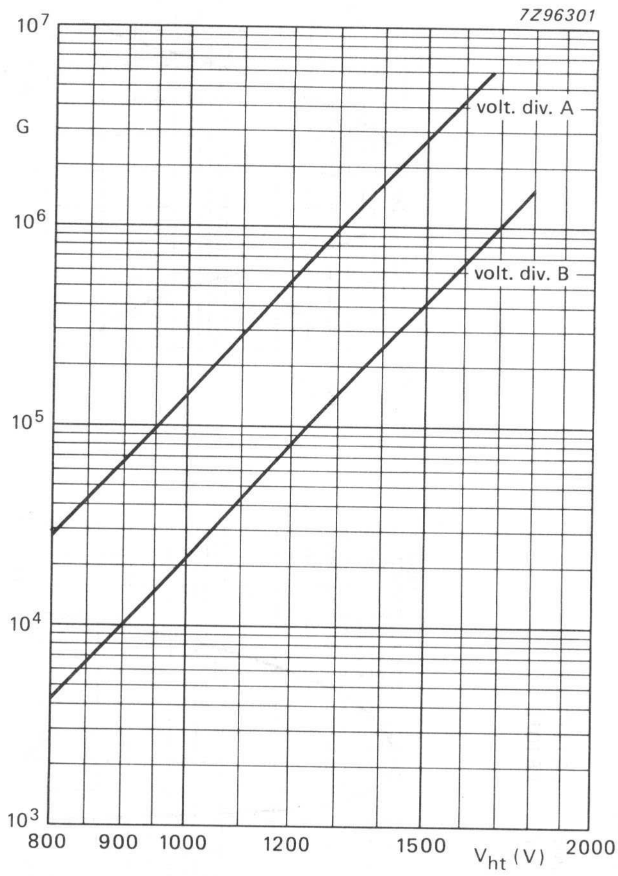

Fig. 9 Gain G as a function of supply voltage V_{ht}.

XP2102 replaces XP2000UB
XP2102B replaces XP2000

10-STAGE VENETIAN BLIND PHOTOMULTIPLIER TUBES

- 46 mm useful diameter head-on type
- Flat window
- Semi-transparent bi-alkaline type D photocathode
- High cathode sensitivity; excellent collection from the entire cathode
- Very good pulse amplitude resolution
- Very low dark current
- Very good stability
- For scintillation detection applications, e.g. gamma cameras, high energy physics experiments

QUICK REFERENCE DATA

Spectral sensitivity characteristic	type D
Useful diameter of the photocathode	> 46 mm
Cathode blue sensitivity	11,5 μA/lmF
Supply voltage for anode blue sensitivity = 1,5 A/lmF	1250 V
Anode dark current at anode blue sensitivity = 1,5 A/lmF	0,5 nA
Pulse amplitude resolution (^{57}Co)	≈ 9,5%
Mean anode sensitivity deviation (30 days)	≈ 1%

To be read in conjunction with *General Operational Recommendations Photomultiplier Tubes.*

GENERAL CHARACTERISTICS

Window

		notes
Material	lime glass	
Shape	plano-plano	
Refractive index at 400 nm	1,54	

Photocathode

		notes
Photocathode		2
Semi-transparent, head-on		
Material	Sb K Cs	
Useful diameter	> 46 mm	
Spectral sensitivity characteristic (Fig. 2)	type D	
Maximum spectral sensitivity	400 ± 30 nm	
Luminous sensitivity	≈ 70 μA/lm	3
Blue sensitivity	typ. 11,5 μA/lmF > 9,0 μA/lmF	1
Spectral sensitivity at 400 nm	≈ 85 mA/W	4

Multiplier system

Number of stages	10
Dynode structure	venetian blind
Dynode material	CuBe
Capacitances	
anode to final dynode	≈ 7 pF
anode to all	≈ 8,5 pF

Magnetic field

When the photocathode is uniformly illuminated the anode current is halved (at V_{ht} = 1500 V) at a magnetic flux density of 0,4 mT perpendicular to the tube axis.

A mu-metal shield extending more than 15 mm beyond the cathode is recommended for magnetic screening.

RECOMMENDED CIRCUIT

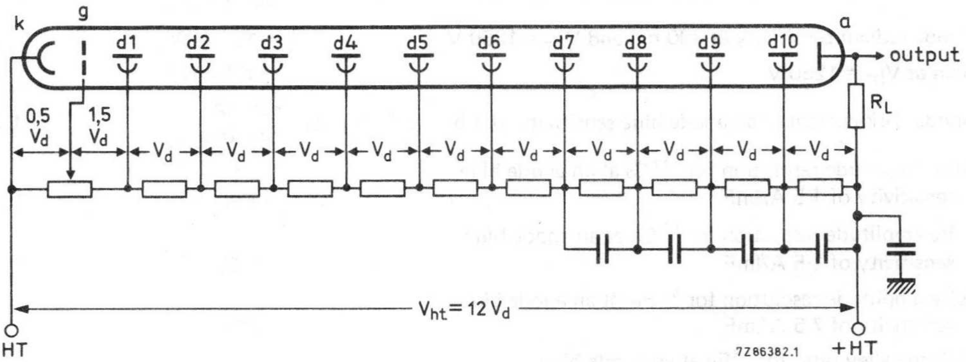

Fig. 1 Voltage divider A. Typical values of capacitors: 10 nF; k = cathode; g = accelerating electrode; dn = dynode no.; a = anode; R_L = load resistor.

Note

For optimum pulse amplitude resolution, the accelerating-electrode potential should be between the cathode and first dynode potentials. If the tube is used in a socket wired for the XP2000UB or XP2000 with the accelerating electrode connected to the first dynode, the pulse amplitude resolution for ^{57}Co is about 9,7%.

TYPICAL CHARACTERISTICS

With voltage divider A (Fig. 1)		notes 5
Supply voltage for an anode blue sensitivity of 1,5 A/lmF (Fig. 5)	$<$ 1450 V typ. 1250 V	1
Anode radiant sensitivity at 400 nm and V_{ht} = 1250 V	≈ 12 kA/W	
Gain at V_{ht} = 1250 V	≈ $1{,}3 \times 10^5$	
Anode dark current at an anode blue sensitivity of 1,5 A/lmF (Fig. 5)	$<$ 5 nA typ. 0,5 nA	1, 6
Pulse amplitude resolution for ^{137}Cs at an anode blue sensitivity of 1,5 A/lmF	≈ 7%	1, 7
Pulse amplitude resolution for ^{57}Co at an anode blue sensitivity of 1,5 A/lmF	≈ 9,5%	1, 7
Pulse amplitude resolution for ^{55}Fe at an anode blue sensitivity of 7,5 A/lmF	≈ 38%	1, 8
Peak-to-valley ratio for ^{55}Fe at an anode blue sensitivity of 7,5 A/lmF	≈ 40	1, 8
Mean anode sensitivity deviation		9
long term (16 h)	≈ 0,5%	
long term (30 days)	≈ 1%	
after change of count rate	≈ 0,8%	
versus temperature between 20 and 60 °C at **450** nm	≈ 0,1% per K	
Anode pulse rise time at V_{ht} = 1500 V	≈ 10 ns	10
Anode pulse duration at half height at V_{ht} = 1500 V	≈ 20 ns	10
Signal transit time at V_{ht} = 1500 V	≈ 46 ns	10
Anode current linear within 2% at V_{ht} = 1500 V	up to ≈ 10 mA	11

LIMITING VALUES (absolute maximum rating system)

Supply voltage	max. 2000 V	12
Continuous anode current	max. 0,2 mA	13
Voltage between first dynode and photocathode	max. 500 V min. 150 V	14
Voltage between accelerating electrode and photocathode	max. 500 V	
Voltage between consecutive dynodes	max. 300 V	
Voltage between anode and final dynode	max. 300 V	15
Ambient temperature range		
operational (for short periods)	max. + 80 °C min. −30 °C	16
continuous operation and storage	max. + 50 °C min. −30 °C	

Notes

1. Blue sensitivity, expressed in μA/lmF, is measured with a tungsten filament lamp with a colour temperature of 2856 ± 5K. Light is transmitted through a blue filter (Corning CS no. 5-58, polished to half stock thickness).
2. The bialkaline photocathode has a significant resistance which increases rapidly with reducing temperature. It is therefore recommended that it should not be exposed to light of too great an intensity; the cathode current should be limited, for example, to 1 nA at room temperature or 0,1 nA at −30 °C. If too high a photocurrent is passed, the cathode can no longer be considered an equipotential surface, and the focusing of electrons onto the first dynode will be affected, resulting in departure from linearity.
3. Luminous sensitivity is measured with a tungsten filament lamp with a colour temperature of 2856 ± 5K.
4. Spectral sensitivity is measured with a tungsten filament lamp with a colour temperature of 2856 ± 5K. Light is transmitted through an interferential filter. Spectral sensitivity at 400 nm, expressed in A/W, can be estimated by multiplying the blue sensitivity, expressed in A/lmF, by $7{,}7 \times 10^3$ for this type of tube.
5. Wherever possible, the power supply should be arranged so that the cathode is earthed and the anode is at + HT, however, it is sometimes necessary to supply the tube with the anode earthed and the cathode at −HT. Under these circumstances, erratic noise and dark current are generally increased and unstable, particularly after application of voltage. The glass envelope of the tube should be supported only by insulators with an insulation resistance of $> 10^{15}$ ohm.
6. Dark current is measured at ambient temperature, after the tube has been in darkness for approx. 1 min. Lower values can be obtained after a longer stabilization period in darkness (approx. 30 min).
7. Pulse amplitude resolution for ^{137}Cs and ^{57}Co is measured with an NaI(Tl) cylindrical scintillator (Quartz et Silice serial no. 4856 or equivalent) with a diameter of 50 mm and a height of 50 mm (2″ x 2″). The count rate used is $\approx 10^4$ c/s.
8. Pulse amplitude resolution for ^{55}Fe is measured with an NaI(Tl) cylindrical scintillator with a diameter of 25 mm and a height of 1 mm provided with a beryllium window. The count rate used is $\approx 2 \times 10^3$ c/s.
9. The mean anode sensitivity deviation is measured by coupling an NaI(Tl) scintillator to the window of the tube. Long term (16 h) deviation is measured by placing a ^{137}Cs source at a distance from the scintillator such that the count rate is $\approx 10^4$ c/s corresponding to an average anode current of ≈ 300 nA. Anode sensitivity deviation after change of count rate is measured with a ^{137}Cs source at a distance of the scintillator such that the count rate can be changed from 10^4 c/s to 10^3 c/s corresponding to an average anode current of ≈ 1 μA and $\approx 0{,}1$ μA respectively. Both tests are carried out according to ANSI–N42–9–1972 of IEEE recommendations.
10. Measured with a pulsed light source, with a pulse duration (FWHM) of < 1 ns; the cathode being completely illuminated. The rise time is determined between 10% and 90% of the amplitude of the anode pulse. The signal transit time is measured between the instant at which the illuminating pulse at the cathode becomes maximum, and the instant at which the anode pulse attains its maximum. Rise time, pulse duration and transit time vary as a function of high tension supply voltage V_{ht}, approximately as $V_{ht}^{-\frac{1}{2}}$.
11. To obtain a peak pulse current greater than that obtainable with divider A, it is necessary to increase the inter-dynode voltage of the stages progressively. Other dividers can be conceived to achieve other compromises. It is generally recommended that the voltage difference between one stage and the next is less than a factor of 2.

Notes (continued)

12. Total HT supply voltage, or the voltage at which the tube has an anode blue sensitivity of 40 A/lmF, whichever is lower.
13. A value of $< 10\ \mu A$ is recommended for applications requiring good stability.
14. Minimum value to obtain good collection in the input optics.
15. When calculating the anode voltage the voltage drop across the load resistor should be taken into account.
16. For type XP2102B this range of temperatures is limited principally by stresses in the sealing layer of the base to the glass bulb. Where low temperature operation is contemplated, the supplier should be consulted.

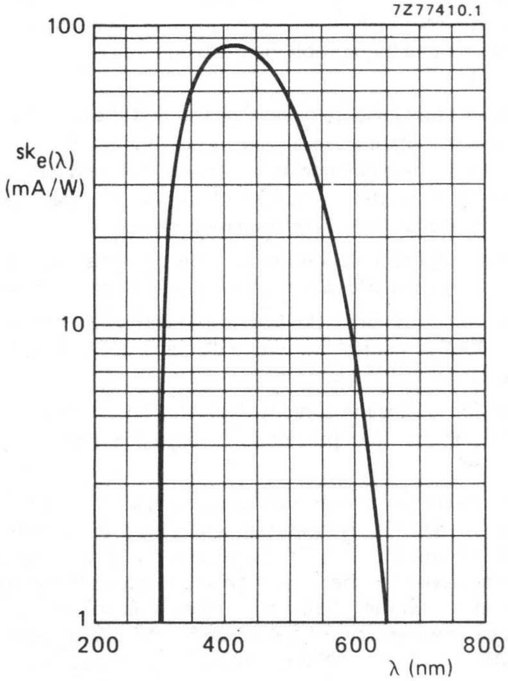

Fig. 2 Spectral sensitivity characteristic.

MECHANICAL DATA

Dimensions in mm

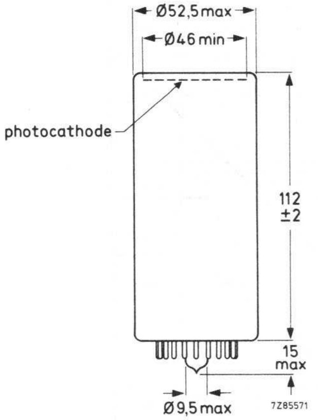

Fig. 3 XP2102.

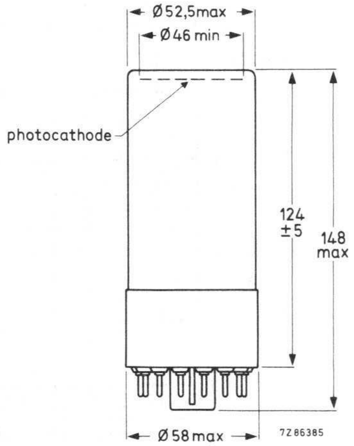

Fig. 4 XP2102B.

Base	19-pin all-glass
Net mass	120 g

Base	14-pin IEC 67-1-16a (JEDEC B14-38)
Net mass	163 g

PIN CONNECTIONS

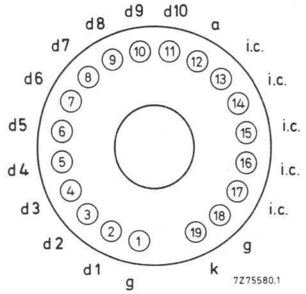

XP2102

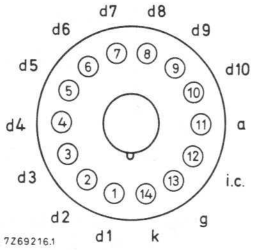

XP2102B

ACCESSORIES

Socket

for XP2102	type FE2019
for XP2102B	type FE1014

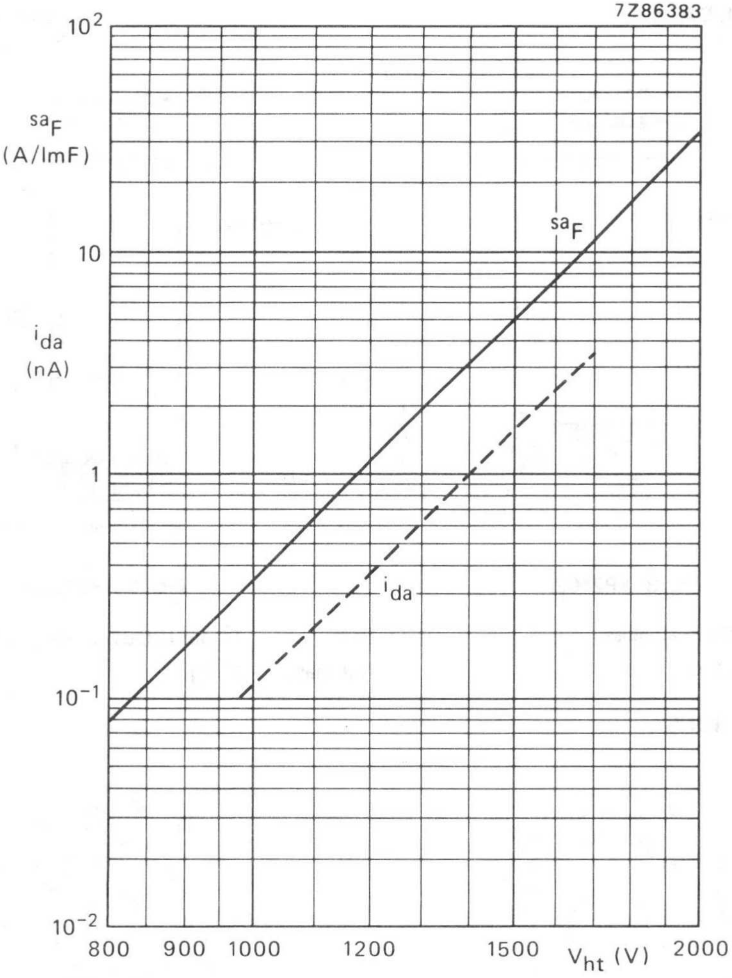

Fig. 5 Anode blue sensitivity sa_F, and anode dark current i_{da} as a function of supply voltage V_{ht}.

i_{da} is given as a dotted line to indicate its principle behaviour only.

**See also XP3202
XP3202B**

10-STAGE PHOTOMULTIPLIER TUBE

- 44 mm useful diameter head-on type
- plano-plano window
- semi-transparent bi-alkaline type D photocathode
- high stability
- tubes, from serial number 9500 onwards, are provided with high gain first dynode
- for scintillation counting, laboratory and industrial photometry
- XP2202 has a 19-pin all-glass base; XP2202B has a 14-pin plastic base.

QUICK REFERENCE DATA

spectral sensitivity characteristic			type D
Useful diameter of the photocathode		>	44 mm
Cathode spectral sensitivity at 400 nm			75 mA/W
Supply voltage for an anode spectral sensitivity of 60 kA/W at 400 nm			1400 V
Anode pulse rise time		≈	3,5 ns
Pulse amplitude resolution (^{137}Cs)		≈	7,2 %
Pulse amplitude resolution (^{55}Fe)		≈	42 %
Linearity			
with voltage divider A	up to	≈	100 mA
with voltage divider B	up to	≈	200 mA

To be read in conjunction with *General Operational Recommendations Photomultiplier Tubes.*

GENERAL CHARACTERISTICS

			note
Window			
Material		lime-glass	
Shape		plano-plano	
Refractive index at 400 nm		1,54	
Photocathode (note 1)			
Semi-transparent, head-on			
Material		Sb K Cs	
Useful diameter	>	44 mm	
Spectral sensitivity characteristic (Fig. 6)		type D	
Maximum spectral sensitivity		400 ± 30 nm	
Spectral sensitivity at 400 nm	typ. >	75 mA/W 60 mA/W	2

Multiplier system

Number of stages		10
Dynode structure		linear focused
Dynode material		Cu Be
Capacitances		
anode to final dynode	≈	3 pF
anode to all	≈	5 pF

Magnetic field

When the photocathode is illuminated uniformly, the anode current is halved (at V_{ht} = 1200 V, voltage divider A) at a magnetic flux density of:
0,2 mT perpendicular to axis a (see Fig. 1);
0,1 mT parallel to axis a.

It is recommended that the tube be screened from magnetic fields by a mu-metal shield protruding more than 15 mm beyond the photocathode.

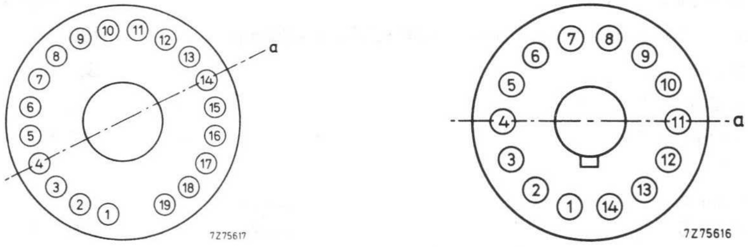

XP2202 XP2202B

Fig. 1 Axis a with respect to base pins (bottom view).

RECOMMENDED CIRCUITS

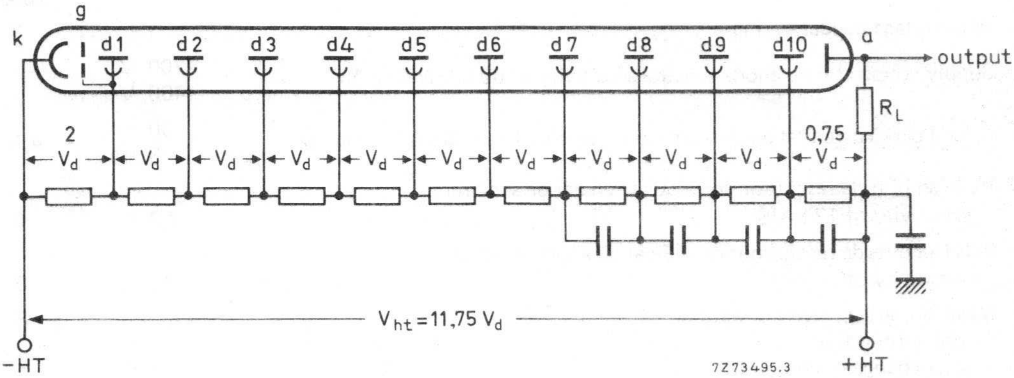

Fig. 2 Voltage divider A.

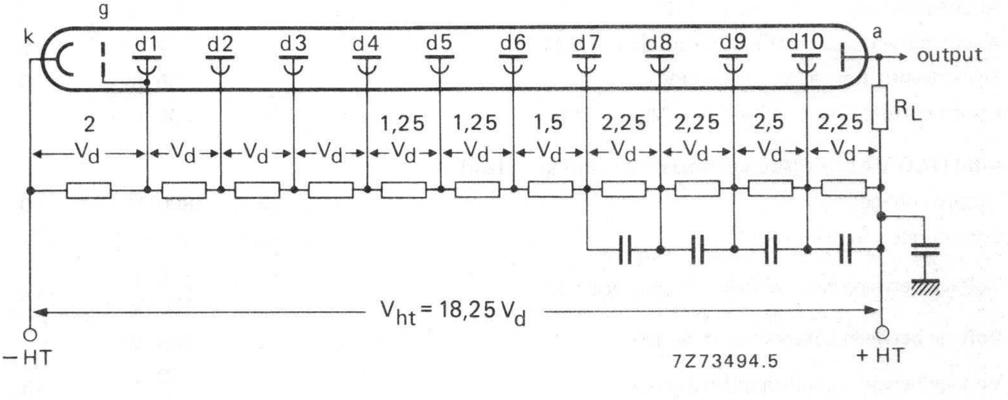

Fig. 3 Voltage divider B.

Typical values of capacitors: 10 nF

k	= cathode
g	= accelerating electrode (internally connected to d1)
dn	= dynode no.
a	= anode
R_L	= load resistor

TYPICAL CHARACTERISTICS

Note: All spectral sensitivities refer to a wavelength of 400 nm.

				notes
With voltage divider A (Fig. 2)				3
Supply voltage for an anode spectral sensitivity of 60 kA/W (Fig. 8)		$<$ typ.	1700 V 1400 V	
Anode dark current at an anode spectral sensitivity of 60 kA/W (Fig. 8)		$<$ typ.	30 nA 3 nA	4,5
Pulse amplitude resolution for ^{137}Cs at an anode spectral sensitivity of 12 kA/W		$\approx$	7,2 %	6
Pulse amplitude resolution for ^{55}Fe at an anode spectral sensitivity of 70 kA/W		$\approx$	42 %	7
Mean anode sensitivity deviation				8
long term (16 h)		$\approx$	1 %	
after change of count rate		$\approx$	1 %	
versus temperature between 0 and +40 °C at 450 nm		$\approx$	0,2 %/K	
Anode current linear within 2% at V_{ht} = 1700 V	up to	$\approx$	100 mA	
With voltage divider B (Fig. 3)				3
Anode spectral sensitivity at V_{ht} = 1700 V (Fig. 8)		$\approx$	60 kA/W	
Anode pulse rise time at V_{ht} = 1700 V		$\approx$	3,5 ns	9
Anode pulse duration at half-height at V_{ht} = 1700 V		$\approx$	7 ns	9
Signal transit time at V_{ht} = 1700 V		$\approx$	35 ns	9
Anode current linear within 2% at V_{ht} = 1700 V	up to	$\approx$	200 mA	

LIMITING VALUES(Absolute maximum rating system)

Supply voltage	max.	1800 V	10
Continuous anode current	max.	0,2 mA	11
Voltage between first dynode and photocathode	max. min.	600 V 150 V	12
Voltage between consecutive dynodes	max.	300 V	
Voltage between anode and final dynode	max. min.	300 V 30 V	13
Ambient temperature range			
operational (for short periods of time)	max. min.	+80 °C −30 °C	14
continuous operation and storage	max. min.	+50 °C −30 °C	

Notes

1. The bi-alkaline photocathode has a significant resistance which increases rapidly with reducing temperature. It is therefore recommended that it should not be exposed to light of too great an intensity; the cathode current should be limited, for example, to 1 nA at room temperature or 0,1 nA at −30 °C. If too high a photocurrent is passed, the cathode can no longer be considered an equipotential surface, and the focusing of electrons onto the first dynode will be affected, resulting in departure from linearity. In applications with short pulse times the photocathode is able to deliver pulses containing 10^6 to 10^7 photoelectrons without disturbance.

Notes (continued)

2. Spectral sensitivity is measured with a tungsten filament lamp with a colour temperature of 2856 ± 5K. Light is transmitted through an interferential filter.
3. To obtain a peak pulse current greater than that obtainable with divider A, it is necessary to increase the inter-dynode voltage of the stages progressively. Divider circuit B is an example of a "progressive" divider, giving a compromise between gain, speed, and linearity. Other dividers can be conceived to achieve other compromises. It is generally recommended that the voltage difference between one stage and the next is less than a factor of 2.
4. Wherever possible, the power supply should be arranged so that the cathode is earthed and the anode is at + HT, however, it is sometimes necessary to supply the tube with the anode earthed and the cathode at −HT. Under these circumstances, erratic noise and dark current are generally increased and unstable, particularly after application of voltage. The glass envelope of the tube should be supported only by insulators with an insulation resistance of $> 10^{15}$ ohm.
5. Dark current is measured at ambient temperature, after the tube has been in darkness for approx. 1 min. Lower values can be obtained after a longer stabilization period in darkness (approx. 30 min).
6. Pulse amplitude resolution for ^{137}Cs is measured with an NaI (Tl) cylindrical scintillator (Quartz et Silice ser. no. 7256 or equivalent) with a diameter of 44 mm and a height of 50 mm. The count rate used is $\approx 10^4$ c/s.
7. Pulse amplitude resolution for ^{55}Fe is measured with a NaI (Tl) cylindrical scintillator with a diameter of 25 mm and a height of 1 mm, provided with a beryllium window. The count-rate used is 2×10^3 c/s.
8. The mean anode sensitivity deviation is measured by coupling an NaI (Tl) scintillator to the window of the tube. Long term (16 h) deviation is measured by placing a ^{137}Cs source at a distance from the scintillator such that the count rate is $\approx 10^4$ c/s corresponding to an average anode current of $\approx$ 300 nA. Anode sensitivity deviation after change of count rate is measured with a ^{137}Cs source at a distance of the scintillator such that the count rate can be changed from 10^4 c/s to 10^3 c/s corresponding to an average anode current of $\approx 1\ \mu$A and $\approx 0{,}1\ \mu$A respectively. Both tests are carried out according to ANSI–N42–9–1972 of IEEE recommendations.
9. Measured with a pulsed light source, with a pulse duration (FWHM) of < 1 ns; the cathode being completely illuminated. The rise time is determined between 10% and 90% of the amplitude of the anode pulse. The signal transit time is measured between the instant at which the illuminating pulse at the cathode becomes maximum, and the instant at which the anode pulse attains its maximum. Rise time, pulse duration and transit time vary as a function of high tension supply voltage V_{ht}, approximately as $V_{ht}^{-1/2}$.
10. Total HT supply voltage or the voltage at which the tube has an anode spectral sensitivity of 600 kA/W, whichever is lower.
11. A value of $< 10\ \mu$A is recommended for application requiring good stability.
12. Minimum value to obtain good collection in the input optics.
13. When calculating the anode voltage the voltage drop across the load resistor should be taken into account.
14. For type XP2202B this range of temperatures is limited principally by stresses in the sealing layer of the base to the glass bulb. Where low temperature operation is contemplated, the supplier should be consulted.

MECHANICAL DATA

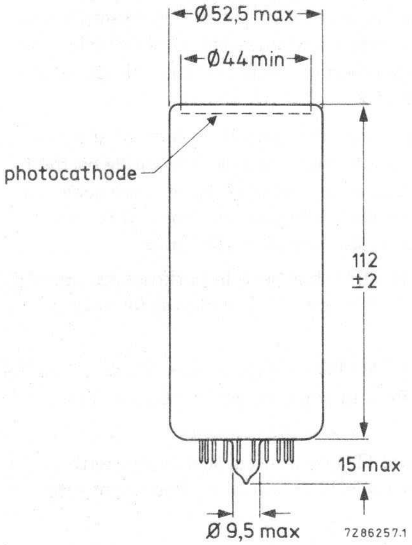

Fig. 4 XP2202.

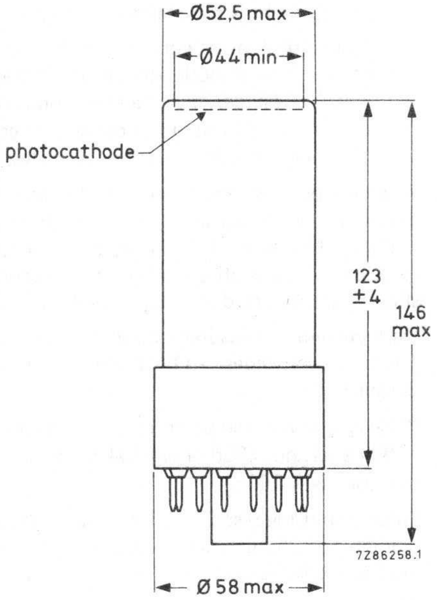

Fig. 5 XP2202B.

Base	19-pin all-glass
Net mass	110 g

Base	14-pin (JEDEC B14-38)
Net mass	153 g

PIN CONNECTIONS

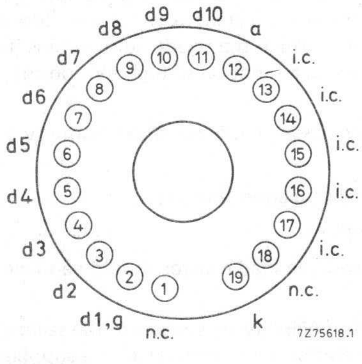

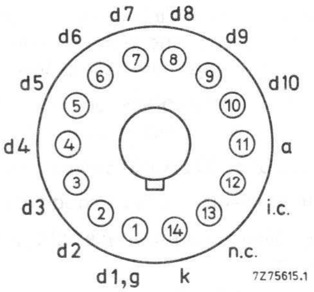

ACCESSORIES

Socket:

for XP2202 type FE2019
for XP2202B type FE1014

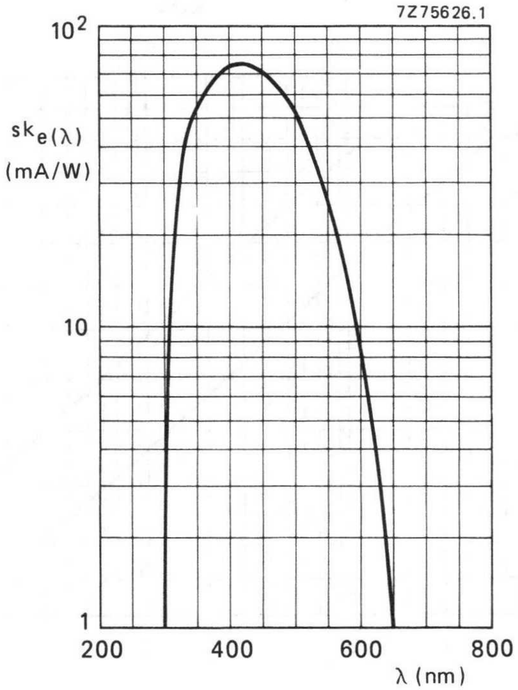

Fig. 6 Spectral sensitivity characteristic.

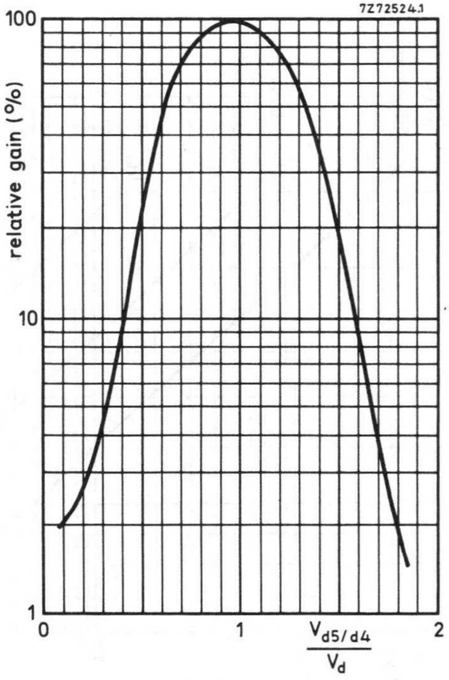

Fig. 7 Relative gain as a function of the voltage between d5 and d4, normalized to V_d; $V_{d6/d4}$ constant.

Note: gain regulation by changing the voltage between d5 and d4 may cause a degradation of other parameters such as stability and linearity.

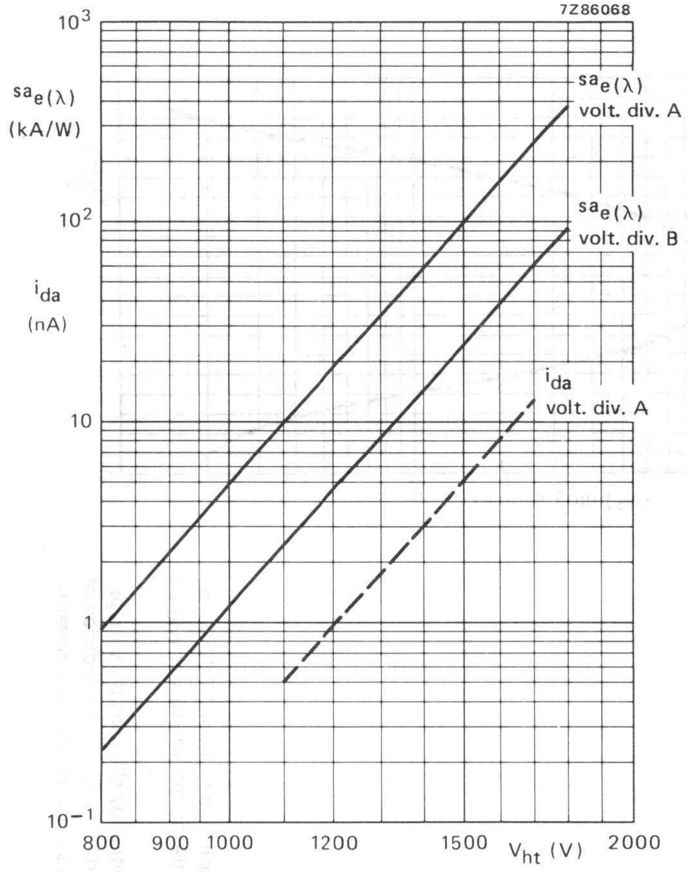

Fig. 8 Anode spectral sensitivity $sa_{e(\lambda)}$ at $\lambda = 400$ nm, and anode dark current i_{da} as a function of supply voltage V_{ht}.

i_{da} is given as a dotted line to indicate its principle behaviour only.

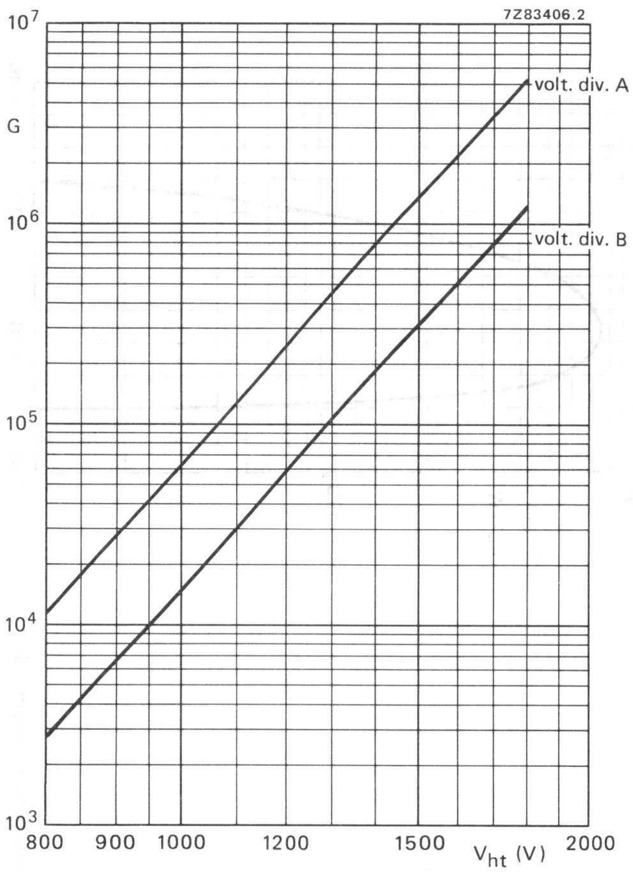

Fig. 9 Gain G as a function of supply voltage V_{ht}.

10-STAGE PHOTOMULTIPLIER TUBE

- 44 mm useful diameter head-on type
- plano-plano window
- semi-transparent tri-alkaline S20 (type T) photocathode
- high stability
- for industrial applications, e.g. lasers and flying spot scanners
- unilaterally interchangeable with XP1002

QUICK REFERENCE DATA

Spectral sensitivity characteristic	S20 (type T)
Useful diameter of the photocathode	> 44 mm
Spectral sensitivity of the photocathode at 700 nm	16 mA/W
Supply voltage for an anode luminous sensitivity = 60 A/lm	1350 V
Anode pulse rise time (with voltage divider B)	≈ 3,5 ns
Linearity	
with voltage divider A	up to ≈ 100 mA
with voltage divider B	up to ≈ 200 mA

To be read in conjunction with *General Operational Recommendations Photomultiplier Tubes.*

GENERAL CHARACTERISTICS

Window

Material	borosilicate
Shape	plano-plano
Refractive index at 550 nm	1,48

Photocathode

Semi-transparent, head-on	
Material	Sb Na K Cs
Useful diameter	> 44 mm
Spectral sensitivity characteristic (Fig. 5)	S20 (type T)
Maximum spectral sensitivity	420 ± 30 nm
Luminous sensitivity	≈ 165 μA/lm
Spectral sensitivity	
at 700 nm	typ. 16 mA/W > 7 mA/W
at 630 nm	≈ 30 mA/W

Multiplier system

Number of stages	10
Dynode structure	linear focused
Dynode material	Cu Be
Capacitances	
anode to final dynode	≈ 3 pF
anode to all	≈ 5 pF

Magnetic field

When the photocathode is illuminated uniformly the anode current is halved (at V_{ht} = 1200 V, voltage divider A) at a magnetic flux density of:

0,2 mT perpendicular to axis a (see Fig. 1);
0,1 mT parallel with axis a.

It is recommended that the tube be screened from magnetic fields by a mu-metal shield protruding > 15 mm beyond the photocathode.

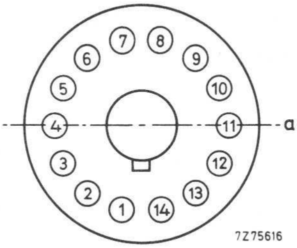

Fig. 1 Axis a with respect to base pins (botton view).

RECOMMENDED CIRCUITS

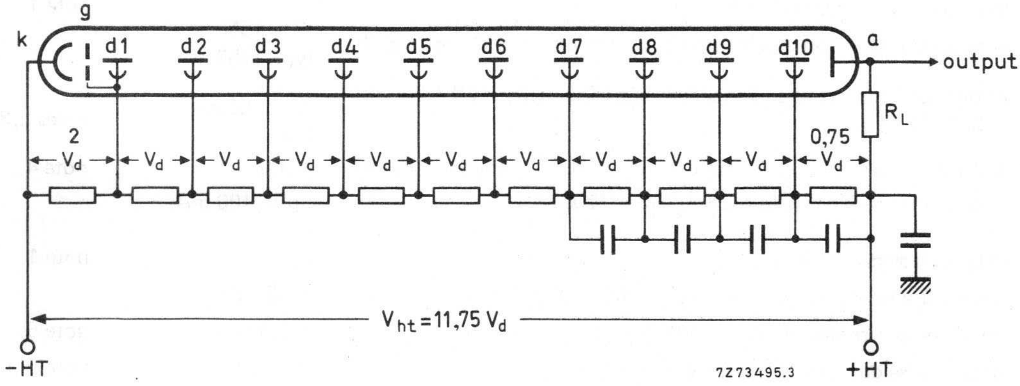

Fig. 2 Voltage divider A.

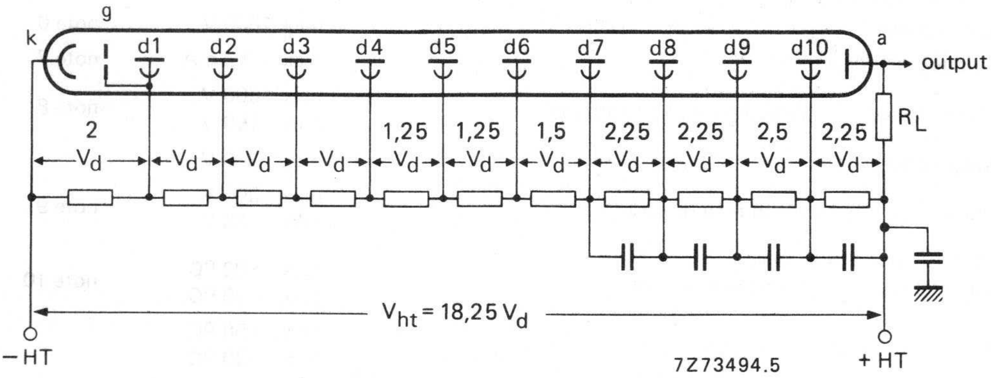

Fig. 3 Voltage divider B.

k = cathode
g = accelerating electrode (internally connected to d1)
dn = dynode no.
a = anode
R_L = load resistor

Typical values of capacitors: 10 nF

TYPICAL CHARACTERISTICS

With voltage divider A (Fig. 2) note 1

Supply voltage for an anode luminous sensitivity = 60 A/lm (Fig. 7)	$<$ 1550 V typ. 1350 V	
Anode dark current at an anode luminous sensitivity = 60 A/lm (Fig. 7)	$<$ 50 nA typ. 3 nA	notes 2,3
Mean anode sensitivity deviation at V_{ht} = 1200 V, long term (16 h)	$\approx$ 1%	note 4
Anode current linear within 2% at V_{ht} = 1700 V	up to 100 mA	

With voltage divider B (Fig. 3) note 1

Anode luminous sensitivity at V_{ht} = 1700 V (Fig. 7)	$\approx$ 55 A/lm	
Anode pulse rise time at V_{ht} = 1700 V	$\approx$ 3,5 ns	note 5
Anode pulse duration at half height at V_{ht} = 1700 V	$\approx$ 7 ns	note 5
Signal transit time at V_{ht} = 1700 V	$\approx$ 35 ns	note 5
Anode current linear within 2% at V_{ht} = 1700 V	up to $\approx$ 200 mA	

LIMITING VALUES (Absolute maximum rating system)

Supply voltage	max. 1800 V	note 6
Continuous anode current	max. 0,2 mA	note 7
Voltage between first dynode and photocathode	max. 600 V min. 150 V	note 8
Voltage between consecutive dynodes	max. 300 V	
Voltage between anode and final dynode	max. 300 V min. 30 V	note 9
Ambient temperature range operational (for short periods of time)	max. +80 °C min. –30 °C	note 10
continuous operation and storage	max. +50 °C min. –30 °C	

Notes

1. To obtain a peak pulse current greater than that obtainable with divider A, it is necessary to increase the inter-dynode voltage of the stages progressively. Divider circuit B is an example of a "progressive" divider, giving a compromise between gain, speed, and linearity. Other dividers can be conceived to achieve other compromises. It is generally recommended that the voltage difference between one stage and the next is less than a factor of 2.
2. Wherever possible, the power supply should be arranged so that the cathode is earthed and the anode is at + HT, however, it is sometimes necessary to supply the tube with the anode earthed and the cathode at −HT. Under these circumstances, erratic noise and dark current are generally increased and unstable, particularly after application of voltage. The glass envelope of the tube should be supported only by insulators with an insulation resistance of $> 10^{15}$ ohm.
3. Dark current is measured at ambient temperature, after the tube has been in darkness for approx. 1 min. Lower values can be obtained after a longer stabilization period in darkness (approx. 30 min).
4. The mean anode sensitivity deviation measurement is carried out with light pulses at a count rate of 10^4 c/s resulting in an average anode current of 0,5 μA. See also *General Operational Recommendations Photomultiplier Tubes.*
5. Measured with a pulsed light source, with a pulse duration (FWHM) of < 1 ns; the cathode being completely illuminated. The rise time is determined between 10% and 90% of the amplitude of the anode pulse. The signal transit time is measured between the instant at which the illuminating pulse at the cathode becomes maximum, and the instant at which the anode pulse attains its maximum. Rise time, pulse duration and transit time vary as a function of high tension supply voltage V_{ht}, approximately as $V_{ht}^{-1/2}$.
6. Total HT supply voltage, or the voltage at which the tube has an anode luminous sensitivity of 600 A/lm, whichever is lower.
7. A value of < 10 μA is recommended for applications requiring good stability.
8. Minimum value to obtain good collection in the input optics.
9. When calculating the anode voltage the voltage drop across the load resistor should be taken into account.
10. This range of temperatures is limited principally by stresses in the sealing layer of the base to the glass bulb. Where low temperature operation is contemplated, the supplier should be consulted.

MECHANICAL DATA

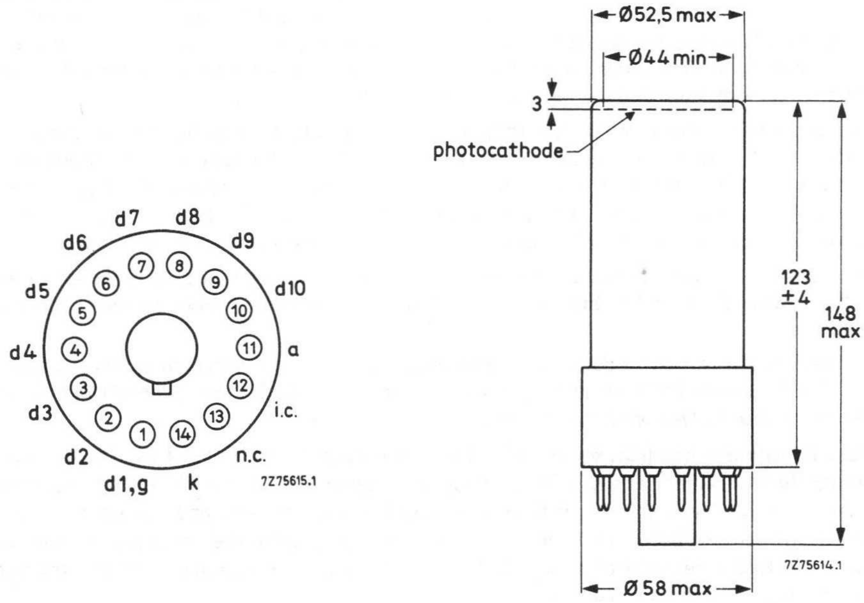

Fig. 4.

Base	14-pin (JEDEC B14-38)
Net mass	144 g

ACCESSORIES

Socket	type FE1014

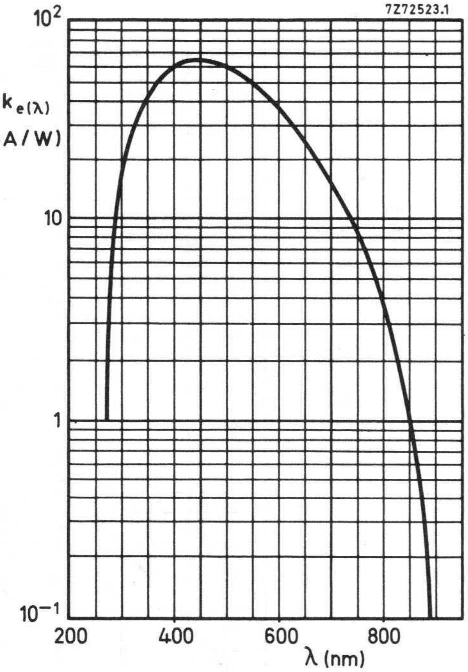

Fig. 5 Spectral sensitivity characteristic.

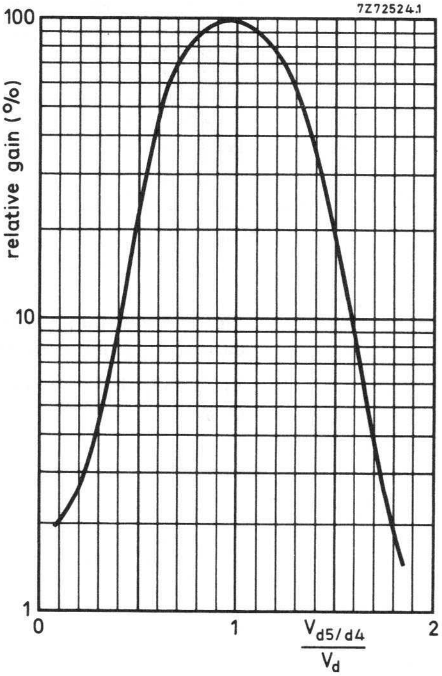

Fig. 6 Relative gain as a function of the voltage between d5 and d4 normalized to V_d; $V_{d6/d4}$ constant.

Note: Gain regulation by changing the voltage between d5 and d4 may cause a degradation of other parameters such as stability and linearity.

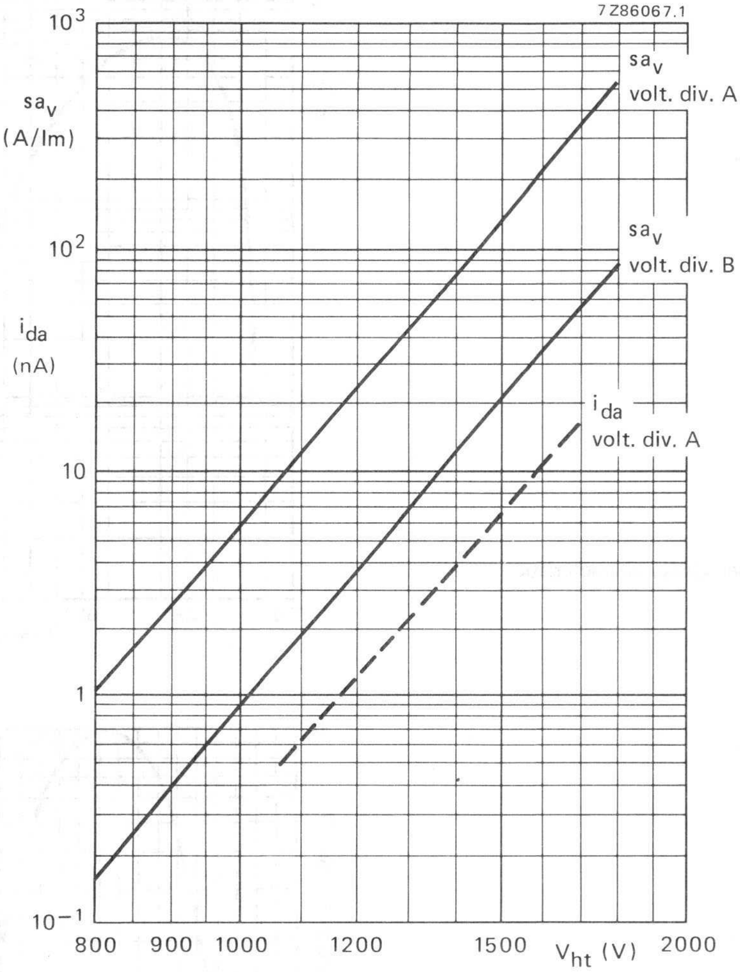

Fig. 7 Anode luminous sensitivity, sa_V, and anode dark current i_{da} as a function of supply voltage V_{ht}.

i_{da} is given as a dotted line to indicate its principle behaviour only.

12-STAGE PHOTOMULTIPLIER TUBE

- 44 mm useful diameter head-on types
- plano-plano window
- semi-transparent bi-alkaline type D photocathode
- high gain and very good pulse linearity
- good single electron spectrum resolution, for tubes with high gain first dynode (from serial number 7000 onwards)
- For high energy physics experiments and industrial applications.
- XP2212 (with 19-pin base) is pin-compatible with XP2232 and XP2262;
  XP2212B (with 20-pin base) is pin-compatible with XP2232B and XP2262B, and unilaterally pin-compatible with 56AVP-family tubes.

QUICK REFERENCE DATA

Spectral sensitivity characteristic		type D		
Useful diameter of the photocathode		>	44	mm
Quantum efficiency at 400 nm			23	%
Cathode spectral sensitivity at 400 nm			75	mA/W
Supply voltage for a gain of 3 x 10^7			1900	V
Pulse amplitude resolution for ^{137}Cs		≈	7,2	%
Anode pulse rise time (with voltage divider B)		≈	4	ns
Linearity				
with voltage divider A (Fig. 2)	up to	≈	100	mA
with voltage divider B (Fig. 3)	up to	≈	250	mA

To be read in conjunction with *General Operational Recommendations Photomultiplier Tubes.*

GENERAL CHARACTERISTICS

				notes
Window				
Material	lime glass			
Shape	plano-plano			
Refractive index at 400 nm		1,54		
Photocathode				1
Semi-transparent, head-on				
Material	Sb K Cs			
Useful diameter	>	44	mm	
Spectral sensitivity characteristic (Fig. 4)	type D			
Maximum spectral sensitivity		400 ± 30	nm	
Quantum efficiency at 400 nm		23	%	
Spectral sensitivity at 400 nm	typ. >	75 60	mA/W mA/W	2

Multiplier system

Number of stages		12
Dynode structure		linear focused
Dynode material		Cu Be
Capacitances		
anode to final dynode	≈	3 pF
anode to all	≈	5 pF

Magnetic field

When the photocathode is illuminated uniformly, the anode current is halved (at V_{ht} = 1400 V, voltage divider A) at a magnetic flux density of:
0,2 mT perpendicular to axis a (see Fig. 1);
0,1 mT parallel to axis a.

It is recommended that the tube be screened from magnetic fields by a mu-metal shield protruding > 15 mm beyond the photocathode.

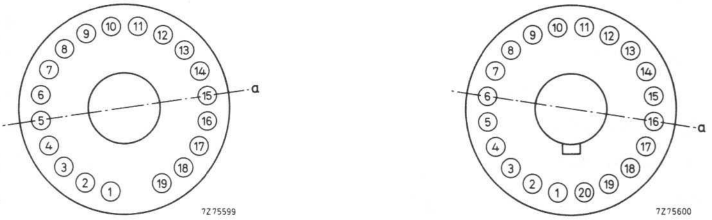

XP2212 XP2212B

Fig. 1 Axis a with respect to base pins (bottom view).

RECOMMENDED CIRCUITS

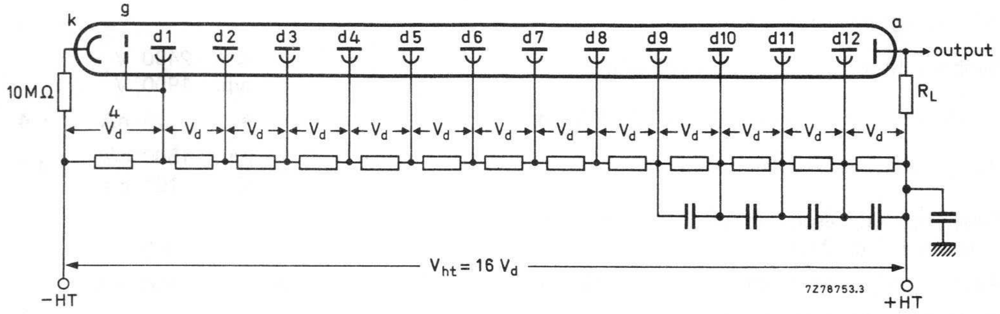

Fig. 2 Voltage divider A.

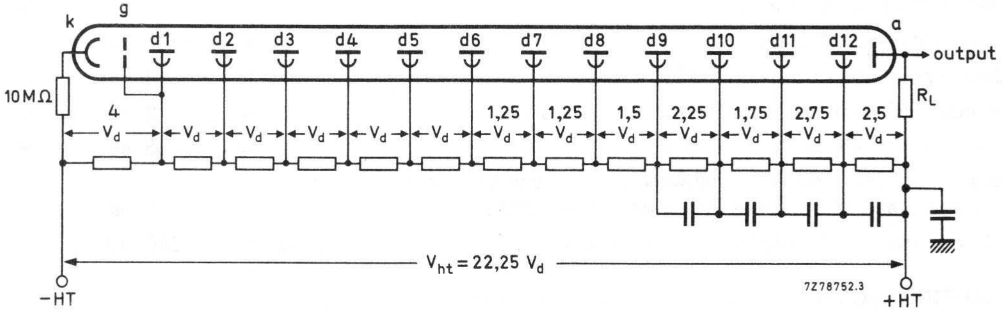

Fig. 3 Voltage divider B.

Typical values of capacitors: 1 nF

k = cathode
g = accelerating electrode (internally connected to d1 in XP2212B).
dn = dynode no.
a = anode
R_L = load resistor

The cathode resistor of 10 MΩ limits the current should there be unintentional contact between the coating and earth when the anode is earthed.

TYPICAL CHARACTERISTICS

Note: All spectral sensitivities refer to a wavelength of 400 nm.

				notes
With voltage divider A (Fig. 2)				3
Supply voltage for a gain of 3×10^7 (Fig. 8)		$<$ typ.	2400 V 1900 V	
Anode dark current at a gain of 3×10^7 (Fig. 8)		$\approx$	15 nA	4
Background noise at a gain of 3×10^7		typ. $<$	1500 c/s 10^4 c/s	4,5
Pulse amplitude resolution for ^{137}Cs at an anode spectral sensitivity of 70 kA/W		$\approx$	7,2 %	6
Anode current linear within 2% at V_{ht} = 1900 V	up to	$\approx$	100 mA	
Mean anode sensitivity deviation				7
long term (16 h)		$\approx$	1 %	
after change of count rate		$\approx$	1 %	
versus temperature between 0 and + 40 °C at 450 nm		$\approx$	0,2 %/K	
Single electron spectrum, peak to valley ratio, at a gain of 3×10^7		$\approx$	2	8
With voltage divider B (Fig. 3)				3
Gain at V_{ht} = 2000 V (Fig. 8)		$\approx$	7×10^6	
Anode pulse rise time at V_{ht} = 2000 V		$\approx$	4 ns	9
Anode pulse duration at half height at V_{ht} = 2000 V		$\approx$	8 ns	9
Signal transit time at V_{ht} = 2000 V		$\approx$	36 ns	9
Signal transit time difference between the centre of the photocathode and 18 mm from the centre at V_{ht} = 2000 V		$\approx$	5 ns	
Anode current linear within 2% at V_{ht} = 2000 V	up to	$\approx$	250 mA	

LIMITING VALUES (Absolute maximum rating system)

Supply voltage	max.	2500 V	10
Continuous anode current	max.	0,2 mA	11
Voltage between first dynode and photocathode	max. min.	800 V 300 V	12
Voltage between consecutive dynodes	max.	400 V	
Voltage between anode and final dynode	max. min.	600 V 80 V	13
Ambient temperature range			
operational (for short periods of time)	max. min.	+80 °C −30 °C	14
continuous operation and storage	max. min.	+50 °C −30 °C	

Notes

1. The bi-alkaline photocathode has a significant resistance which increases rapidly with reducing temperature. It is therefore recommended that it should not be exposed to light of too great an intensity; the cathode current should be limited, for example, to 1 nA at room temperature or 0,1 nA at −30 °C. If too high a photocurrent is passed, the cathode can no longer be considered an equipotential surface, and the focusing of electrons onto the first dynode will be affected, resulting in departure from linearity. In applications with short pulse times the photocathode is able to deliver pulses containing 10^6 to 10^7 photoelectrons without disturbance.
2. Spectral sensitivity is measured with a tungsten filament lamp with a colour temperature of 2856 ± 5K. Light is transmitted through an interferential filter.
3. To obtain a peak pulse current greater than that obtainable with divider A, it is necessary to increase the inter-dynode voltage of the stages propressively. Divider circuit B is an example of a "progressive" divider, giving a compromise between gain, speed, and linearity. Other dividers can be conceived to achieve other compromises after consulting the supplier.
4. Wherever possible, the power supply should be arranged so that the cathode is earthed and the anode is at + HT, however, it is sometimes necessary to supply the tube with the anode earthed and the cathode at −HT. Under these circumstances, erratic noise and dark current are generally increased and unstable, particularly immediately after application of voltage. The tube is provided with a conductive coating connected to the cathode. It is recommended that, if a metal shield is used this be kept at photocathode potential. This implies safety precautions to protect the user. The envelope of the tube should be supported only by insulators with an insulation resistance of $> 10^{15}\ \Omega$.
5. Noise is measured at ambient temperature. After having been stored with its protective hood, the tube is placed in darkness with V_{ht} set to a value to give a gain of 3×10^7. After a 5 min. stabilization period noise pulses with a threshold of 1 pC (corresponding to 0,2 photoelectron) are recorded. Lower values can be obtained after a longer stabilization period.
6. Pulse amplitude resolution for ^{137}Cs is measured with a NaI (Tl) cylindrical scintillator (Quartz et Silice ser. no.: 7256 or equivalent) with a diameter of 44 mm and a height of 50 mm. The count-rate used is $\approx 10^4$ c/s.
7. The mean anode sensitivity deviation is measured by coupling an NaI (Tl) scintillator to the window of the tube. Long term (16 h) deviation is measured by placing a ^{137}Cs source at a distance from the scintillator such that the count rate is $\approx 10^4$ c/s corresponding to an average anode current of ≈ 300 nA. Anode sensitivity deviation after change of count rate is measured with a ^{137}Cs source at a distance of the scintillator such that the count rate can be changed from 10^4 to 10^3 c/s corresponding to an average anode current of ≈ 1 μA and ≈ 0,1 μA respectively. Both tests are carried out according to ANSI–N42–9–1972 of IEEE recommendations.
8. Peak to valley ratio is defined as the single electron peak value divided by the minimum value to the left of the peak.
9. Measured with a pulsed-light source, with a pulse duration (FWHM) of < 1 ns, the cathode being completely illuminated. The rise time is determined between 10% and 90% of the amplitude of the anode pulse. The signal transit time is measured between the instant at which the illuminating pulse at the cathode becomes maximum, and the instant at which the anode pulse attains its maximum. Rise time, pulse duration and transit time vary as a function of high tension supply voltage V_{ht}, approximately as $V_{ht}^{-1/2}$.
   Non-inductive resistors of 51 Ω are connected in the base of type XP2212B to d11 and d12. See also *General Operational Recommendations Photomultiplier Tubes.*
10. Total HT supply voltage, or the voltage at which the tube has a gain of 2×10^8, whichever is lower.
11. A value of < 10 μA is recommended for applications requiring good stability.
12. Minimum value to obtain good collection in the input optics.

Notes (continued)

13. When calculating the anode voltage the voltage drop across the load resistor should be taken into account.
14. For type XP2212B this range of temperatures is limited principally by stresses in the sealing layer of the base to the glass bulb. Where low temperature operation is contemplated, the supplier should be consulted.

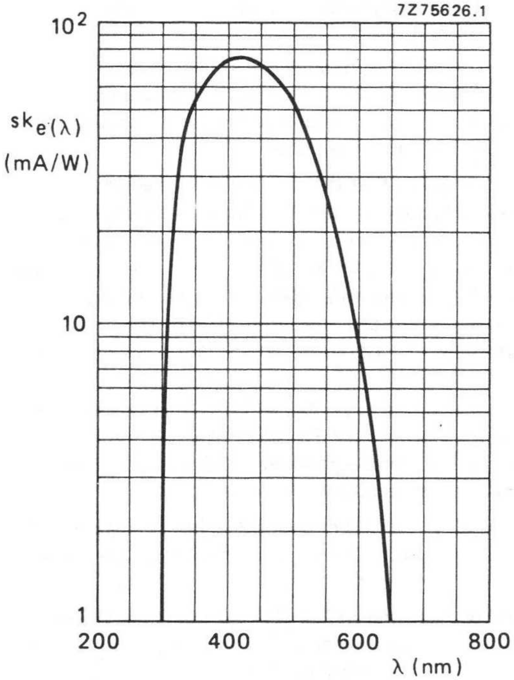

Fig. 4 Spectral sensitivity characteristic.

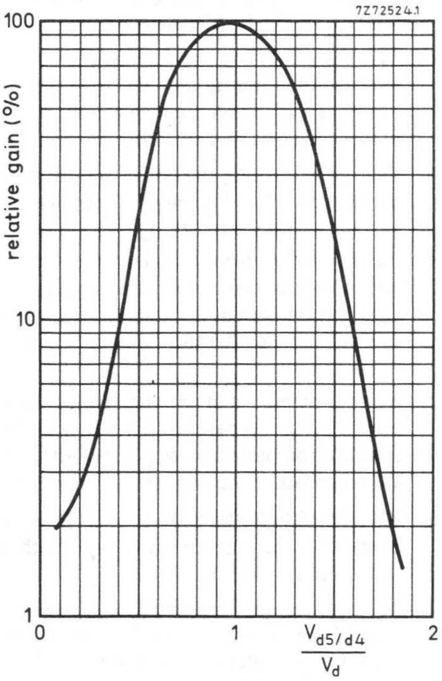

Fig. 5 Relative gain as a function of the voltage between d5 and d4 normalized to V_d. $V_{d6/d4}$ constant.

Note: Gain regulation by changing the voltage between d5 and d4 may cause a degradation of other parameters such as stability and linearity.

MECHANICAL DATA

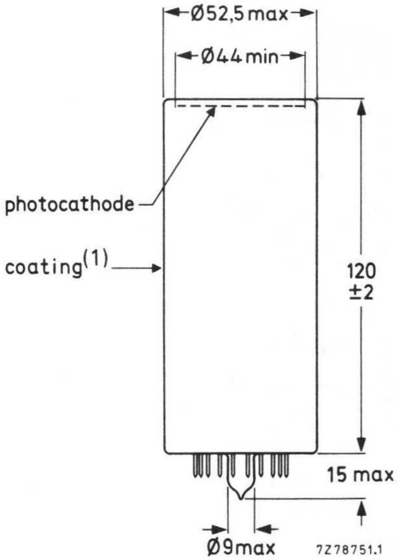

Fig. 6 XP2212.

Base	19-pin all glass
Net mass	111 g

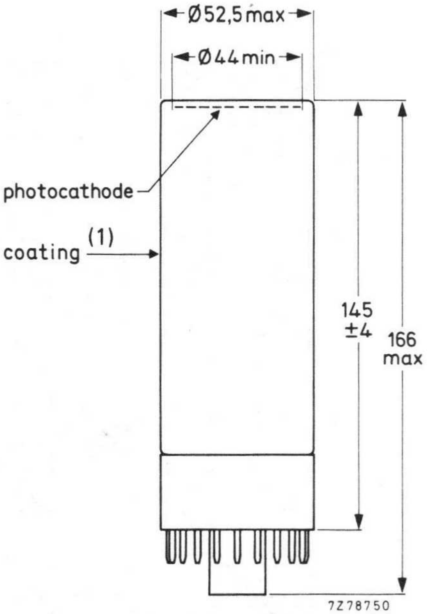

Fig. 7 XP2212B.

Base	20-pin (IEC 67-1-42a, JEDEC B20-102)
Net mass	148 g

PIN CONNECTIONS

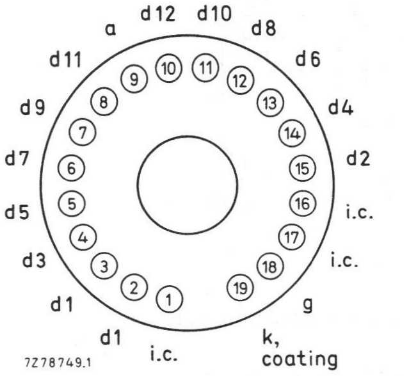

XP2212

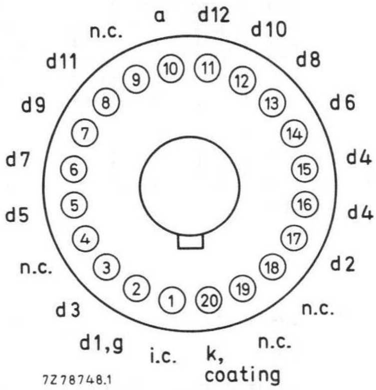

XP2212B.

ACCESSORIES

Socket: for XP2212 type FE2019
for XP2212B type FE1020

(1) The envelope of the tube is covered with a conductive coating, connected to the cathode. On top of this a black paint is applied which is neither guaranteed to be light tight nor isolating. Care should be taken to avoid electric shock.

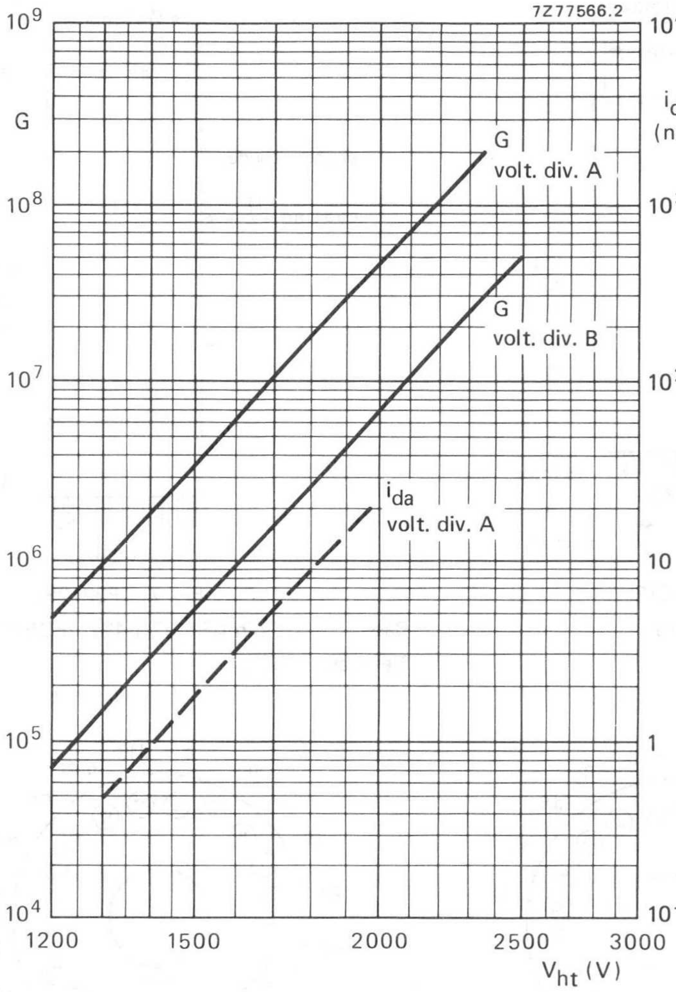

Fig. 8 Gain G and anode dark current, i_{da}, as a function of supply voltage V_{ht}.

i_{da} is given as a dotted line to indicate its principle behaviour only.

12-STAGE PHOTOMULTIPLIER TUBE

The XP2233B is a 44 mm useful diameter head-on photomultiplier tube with a plano-concave window and a semi-transparent trialkaline S20 (type T) photocathode. The tube is intended for use in low light level physics experiments in the red and near infrared part of the spectrum such as laser detection, pollution monitoring, life time measurements. The tube also features good time characteristics.
The XP2233B is unilaterally interchangeable with 56AVP-family tubes.

QUICK REFERENCE DATA

Spectral sensitivity characteristic		S20 (type T)		
Useful diameter of the photocathode		>	44	mm
Cathode spectral sensitivity at 700 nm			15	mA/W
Supply voltage for a gain of 3 x 10^7			2050	V
Anode pulse rise time (with voltage divider B)		≈	2,0	ns
Linearity				
with voltage divider A	up to	≈	100	mA
with voltage divider B	up to	≈	250	mA

To be read in conjunction with *General Operational Recommendations Photomultiplier Tubes.*

GENERAL CHARACTERISTICS

Window

Material	borosilicate		
Shape	plano-concave		
Refractive index at 550 nm		1,48	

Photocathode

Semi-transparent, head-on

Material	Sb Na K Cs			
Useful diameter	>	44	mm	
Spectral sensitivity characteristic (Fig. 5)	S20 (type T)			
Maximum spectral sensitivity at		420 ± 30	nm	
Spectral sensitivity				
at 700 nm	typ.	15	mA/W	←
	>	7	mA/W	
at 630 nm	≈	30	mA/W	←
Luminous sensitivity	≈	150	μA/lm	

Multiplier system

Number of stages		12
Dynode structure	linear focused	
Dynode material	Cu Be	
Capacitances		
anode to final dynode	≈	3 pF
anode to all	≈	5 pF

Magnetic field

When the cathode is illuminated uniformly, the anode current is halved (at V_b = 1400 V, voltage divider A) at a magnetic flux density of:
0,2 mT perpendicular to axis a (see Fig. 1)
0,1 mT parallel with axis a.

It is recommended that the tube be screened against the influence of magnetic fields by a mu-metal shield protruding > 15 mm beyond the photocathode.

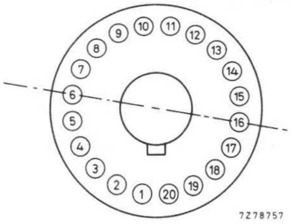

Fig. 1 Axis a with respect to base pins (bottom view).

RECOMMENDED CIRCUITS

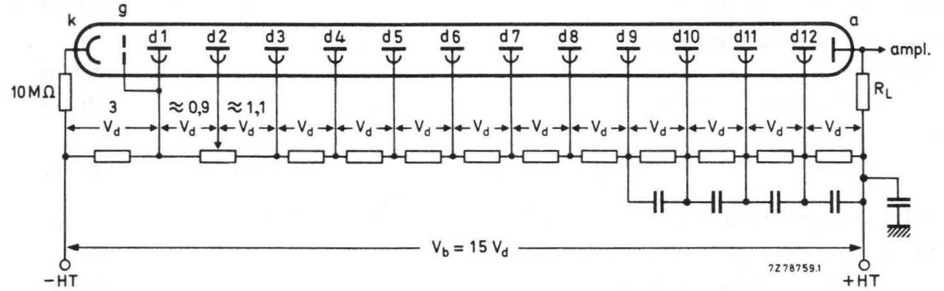

Fig. 2 Voltage divider A.

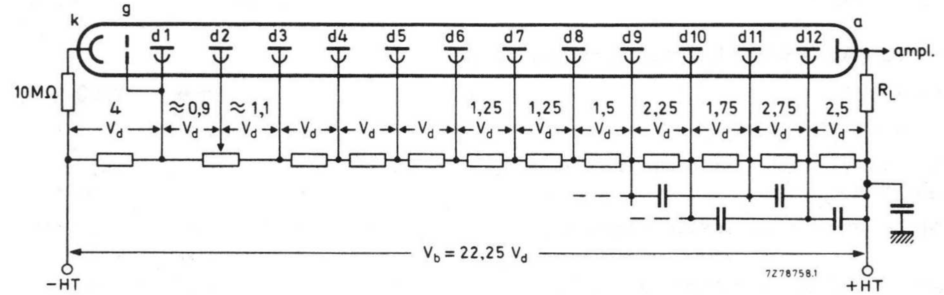

Fig. 3 Voltage divider B.

k = cathode
g = accelerating electrode
d_n = dynode no.:
R_L = load resistor
a • = anode

Typical values of capacitors 1 nF.

The cathode resistor of 10 MΩ limits the current should there be unintentional contact between the coating and earth when the anode is earthed.
The voltage, $V_{d2\text{-}d1}$, to be adjusted for maximum signal.

TYPICAL CHARACTERISTICS

	notes				
With voltage divider A (Fig. 2)	1				
Supply voltage for a gain of 3×10^7 (Fig. 7)			<	2500	V
			typ.	2050	V
Anode dark current at a gain of 3×10^7 (Fig. 7)	2,3		<	1500	nA
			typ.	60	nA
Anode pulse rise time at V_b = 2050 V	4		≈	2,2	ns
Anode pulse duration at half-height at V_b = 2050 V	4		≈	3,6	ns
Signal transit time at V_b = 2050 V	4		≈	30	ns
Anode current linear within 2% at V_b = 2050 V		up to	≈	100	mA
With voltage divider B (Fig. 3)	1				
Gain at V_b = 2400 V (Fig. 7)			≈	2×10^7	
Anode pulse rise time at V_b = 2400 V	4		≈	2,0	ns
Anode pulse duration at half-height at V_b = 2400 V	4		≈	3,2	ns
Signal transit time at V_b = 2400 V	4		≈	30	ns
Signal transit time difference between the centre of the photocathode and 18 mm from the centre at V_b = 2400 V	4		≈	0,7	ns
Anode current linear within 2% at V_b = 2400 V		up to	≈	250	mA

LIMITING VALUES (absolute maximum rating system)

Supply voltage	5	max.	2500	V
Continuous anode current	9	max.	0,2	mA
Voltage between accelerating electrode, g, and photocathode		max.	800	V
Voltage between first dynode and photocathode	6	max.	800	V
		min.	300	V
Voltage between consecutive dynodes		max.	400	V
Voltage between anode and final dynode	7	max.	600	V
		min.	80	V
Ambient temperature range	8			
operational (for short periods of time)		max.	+80	°C
		min.	−30	°C
continuous operation and storage		max.	+50	°C
		min.	−30	°C

Notes

1. To obtain a peak pulse current greater than that obtainable with voltage divider A, it is necessary to increase the inter-dynode voltages of the stages progressively. Divider circuit B is an example of a "progressive" divider giving a compromise between gain, speed and linearity. Other dividers can be conceived to achieve other compromises after consulting the supplier.
2. Wherever possible, the power supply should be arranged so that the cathode is earthed and the anode is at + HT, however, it is sometimes necessary to supply the tube with the anode earthed and the cathode at −HT. Under these circumstances, erratic noise and dark current are generally increased and unstable, particularly immediately after application of voltage. The tube is provided with a conductive coating connected to the cathode. It is recommended that, if a metal shield is used this be kept at photocathode potential. This implies safety precautions to protect the user. The envelope of the tube should be supported only by isolators having an insulation resistance of $> 10^{15}\ \Omega$.
3. Dark current is measured at ambient temperature, after a stabilization period of the tube in darkness ($\approx$ ¼ h).
4. Measured with a pulsed-light source, with a pulse duration (FWHM) of < 1 ns, the cathode being completely illuminated. The rise time is determined between 10% and 90% of the amplitude of the anode pulse. The signal transit time is measured between the instant at which the illuminating pulse at the cathode becomes maximum, and the instant at which the anode pulse attains its maximum. Rise time, pulse duration and transit time vary as a function of high tension supply voltage V_b, approximately as $V_b^{-1/2}$. Non-inductive resistors of 51 Ω are connected in the base of the tube to d_{11} and d_{12}. See also General Operational Recommendations Photomultiplier Tubes.
5. Total high tension supply voltage, or the voltage at which the tube has a gain of 2×10^8, whichever is lower.
6. Minimum value to obtain good collection in the input optics.
7. When calculating the anode voltage the voltage drop across the load resistor should be taken into account.
8. This range of temperatures is limited principally by stresses in the sealing layer of the base to the glass bulb. Where low temperature operation is contemplated, the supplier should be consulted.
9. A value of $< 10\ \mu A$ is recommended for applications requiring good stability.

MECHANICAL DATA

Dimensions in mm

(1) **Warning:**

The envelope of the tube is covered with a conductive coating, connected to the cathode. On top of this a black paint is applied which is neither guaranteed to be light tight nor isolating.
Care should be taken to avoid hazard due to electric shock.

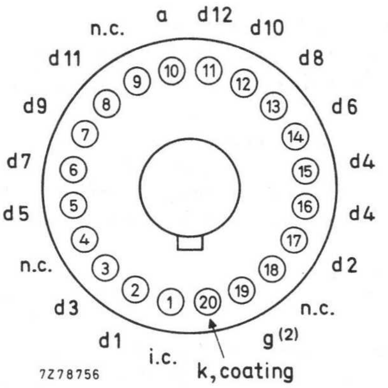

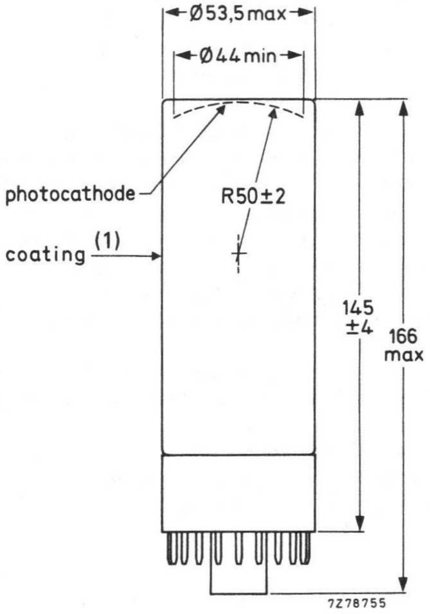

(2) Grid is connected to pin 19 starting from serial no. 1606.

Fig. 4.

Base	20-pin (IEC 67-1-42a, JEDEC B20-102)
Net mass	176 g

ACCESSORIES

Socket	type FE1020

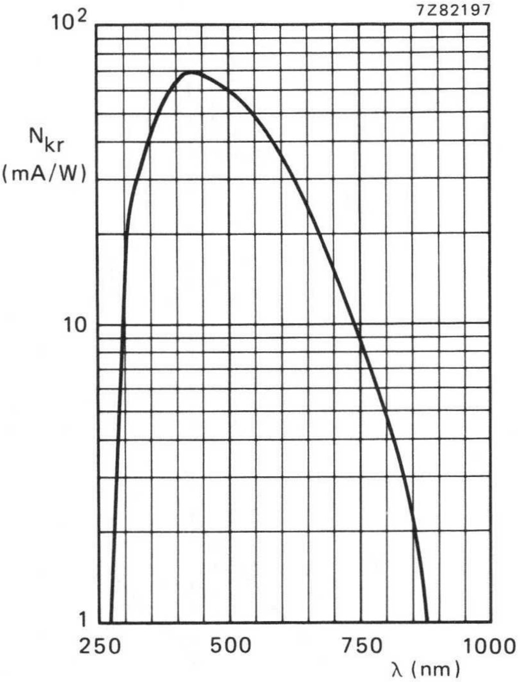

Fig. 5 Spectral sensitivity characteristic.

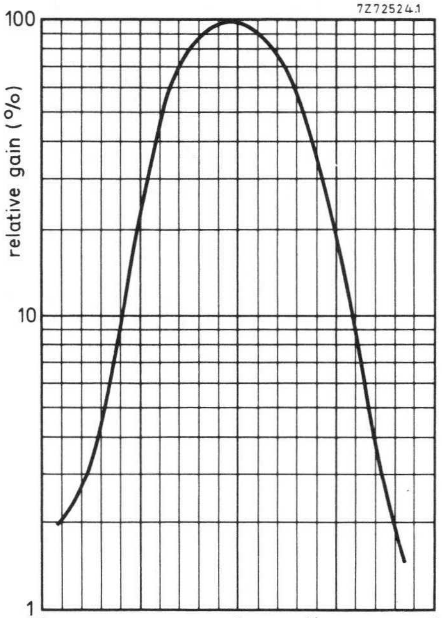

Fig. 6 Relative gain as a function of the voltage between S5 and S4, normalized to V_S. $V_{S6/S4}$ constant.

Note: Gain regulation by changing the voltage between S5 and S4 may cause a degradation of other parameters such as stability and linearity.

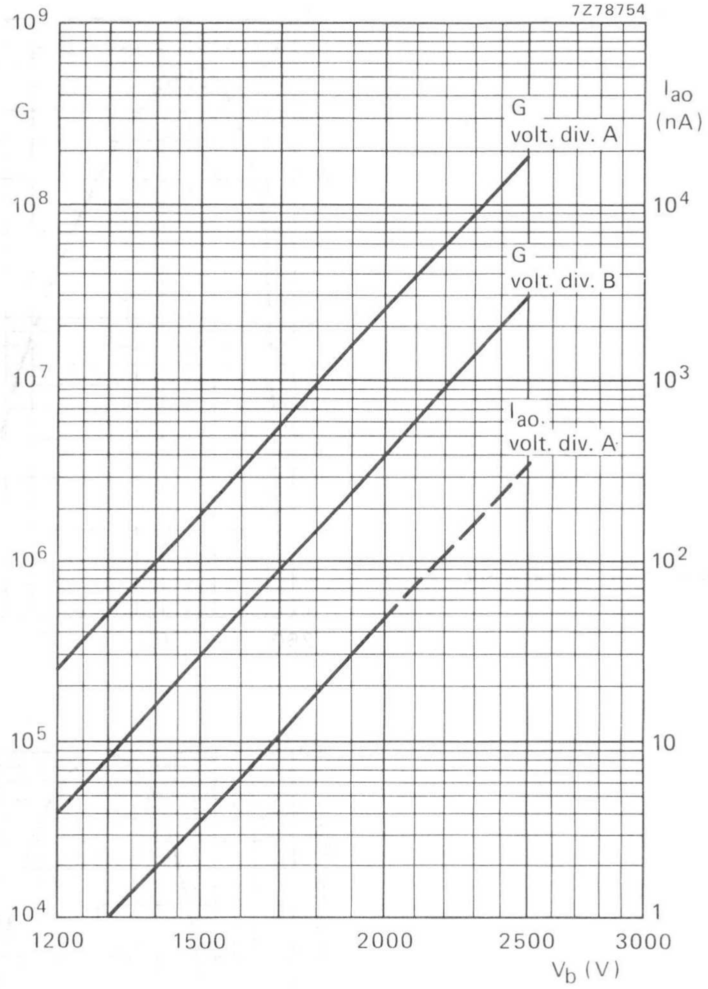

Fig. 7 Gain G, and anode dark current I_{ao}, as a function of supply voltage V_b.

DEVELOPMENT DATA

This data sheet contains advance information and specifications are subject to change without notice.

6-STAGE PHOTOMULTIPLIER TUBE

- 44 mm useful diameter head-on type
- plano-concave window
- semi-transparent bi-alkaline type D photocathode
- high cathode sensitivity
- low gain
- very good pulse linearity and time characteristics of high amplitude pulses at high count rates

QUICK REFERENCE DATA

Spectral sensitivity characteristic		type D		
Useful diameter of the photocathode		>	44	mm
Quantum efficiency at 400 nm			25	%
Cathode blue sensitivity			10,5	μA/lmF
Supply voltage for a gain of 2 x 10^4			2000	V
Anode pulse rise time (with voltage divider B)		≈	1,6	ns
Linearity (with voltage divider B)	up to		350	mA

To be read in conjunction with *General Operational Recommendations Photomultiplier Tubes.*

GENERAL CHARACTERISTICS

Window

					notes
Material	lime-glass				
Shape	plano-concave				
Refractive index at 400 nm		1,54			

Photocathode

				notes
				2
Semi-transparent head-on				
Material	Sb K Cs			
Useful diameter	>	44	mm	
Spectral sensitivity characteristic (Fig. 5)	type D			
Maximum spectral sensitivity		400 ± 30	nm	
Luminous sensitivity	≈	70	μA/lm	3
Blue sensitivity	typ. >	10,5 8,0	μA/lmF μA/lmF	1
Spectral sensitivity at 400 nm	≈	80	mA/W	4
Quantum efficiency at 400 nm		25	%	

Multiplier system

Number of stages		6
Dynode structure		linear focused
Dynode material		Cu Be
Capacitances		
anode to final dynode	≈	3 pF
anode to all	≈	5 pF

Magnetic field

When the photocathode is illuminated uniformly, the anode current is halved at V_{ht} = 1100 V, voltage divider A, at a magnetic flux density of:

0,2 mT perpendicular to axis a (see Fig. 1);

0,1 mT parallel with axis a.

It is recommended that the tube be screened against the influence of magnetic fields by a mu-metal shield protruding > 15 mm beyond the photocathode.

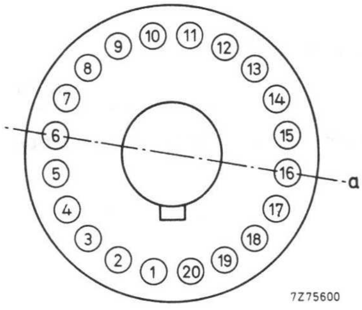

Fig. 1 Axis a with respect to base pins (bottom view).

RECOMMENDED CIRCUITS

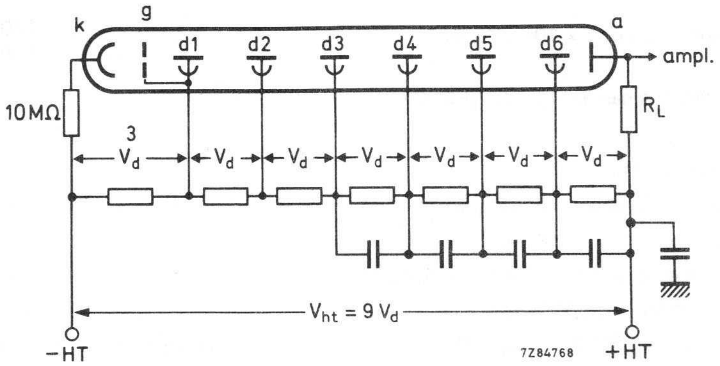

Fig. 2 Voltage divider A.

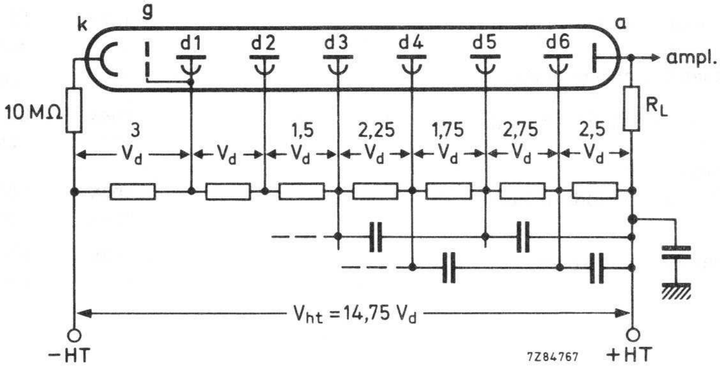

Fig. 3 Voltage divider B.

k = cathode;
g = accelerating electrode;
dn = dynode no.;
R_L = load resistor;
a = anode.

Typical values of capacitors 1 nF.

The cathode resistor of 10 MΩ limits the current should there be unintentional contact between the coating and earth when the anode is earthed.

TYPICAL CHARACTERISTICS

				notes
With voltage divider A (Fig. 2)				5
Supply voltage for a gain of 1 x 10^4 (Fig. 6)		$<$ typ.	1600 V 1100 V	
Anode dark current at a gain of 1 x 10^4 (Fig. 6)		$<$ typ.	5 nA 1 nA	6,7
With voltage divider B (Fig. 3)				5
Supply voltage for a gain of 2 x 10^4 (Fig. 6)		≈	2000 V	
Anode pulse rise time at V_{ht} = 2000 V		≈	1,6 ns	8
Anode pulse duration at half height at V_{ht} = 2000 V		≈	2,4 ns	8
Signal transit time at V_{ht} = 2000 V		≈	16,5 ns	8
Anode current linear within 2% at V_{ht} = 2000 V	up to	≈	350 mA	

LIMITING VALUES (absolute maximum rating system)

Supply voltage	max.	2200 V	
Continuous anode current	max.	0,2 mA	9
Voltage between first dynode and photocathode	max. min.	800 V 300 V	10
Voltage between consecutive dynodes	max.	400 V	
Voltage between anode and final dynode	max. min.	600 V 80 V	11
Ambient temperature range operational (for short periods of time)	max. min.	+80 °C −30 °C	12
continuous operation and storage	max. min.	+50 °C −30 °C	

NOTES

1. Blue sensitivity, expressed in μA/lmF, is measured with a tungsten filament lamp with a colour temperature of 2856 ± 5 K. Light is transmitted through a blue filter (Corning CS no. 5-58, polished to half stock thickness).
2. The bialkaline photocathode has a significant resistance which increases rapidly with reducing temperature. It is therefore recommended that it should not be exposed to light of too great an intensity; the cathode current should be limited, for example, to 10 nA at room temperature or 0,1 nA at −100 °C. If too high a photocurrent is passed, the cathode can no longer be considered an equipotential surface, and the focusing of electrons onto the first dynode will be affected, resulting in departure from linearity.
3. Luminous sensitivity is measured with a tungsten filament lamp with a colour temperature of 2856 ± 5 K.
4. Spectral sensitivity is measured with a tungsten filament lamp with a colour temperature of 2856 ± 5 K. Light is transmitted through an interferential filter. Spectral sensitivity at 400 nm, expressed in A/W, can be estimated by multiplying the blue sensitivity, expressed in A/lmF, by $7{,}6 \times 10^3$ for this type of tube.
5. To obtain a peak pulse current greater than that obtainable with divider A, it is necessary to increase the inter-dynode voltage of the stages progressively. Divider circuit B is an example of a "progressive" divider, giving a compromise between gain, speed, and linearity. Other dividers can be conceived to achieve other compromises. It is generally recommended that the increase in voltage between one stage and the next be kept less than a factor of 2.
6. Wherever possible, the power supply should be arranged so that the cathode is earthed and the anode is at +HT, however, it is sometimes necessary to supply the tube with the anode earthed and the cathode at −HT. Under these circumstances, erratic noise and dark current are generally increased and unstable, particularly immediately after application of voltage. The tube is provided with a conductive coating connected to the cathode. It is recommended that, if a metal shield is used this be kept at photocathode potential. This implies safety precautions to protect the user. The glass envelope of the tube should be supported only by insulators with an insulation resistance of $> 10^{15}\ \Omega$.
7. Dark current is measured at ambient temperature, after the tube has been in darkness for approx. 1 min. Lower values can be obtained after a longer stabilization period in darkness (approx. 30 min).
8. Measured with a pulsed-light source, with a pulse duration (FWHM) of < 1 ns, the cathode being completely illuminated. The rise time is determined between 10% and 90% of the amplitude of the anode pulse. The signal transit time is measured between the instant at which the illuminating pulse at the cathode becomes maximum, and the instant at which the anode pulse attains its maximum. Rise time, pulse duration and transit time vary as a function of high tension supply voltage V_{ht}, approximately as $V_{ht}^{-1/2}$.
9. For applications which require good stability a value of < 10 μA is recommended. Use of high anode currents limits tube life; see also General Operational Recommendations Photomultiplier Tubes.
10. Minimum value to obtain good collection in the input optics.
11. When calculating the anode voltage the voltage drop across the load resistor should be taken into account.
12. This range of temperatures is limited principally by stresses in the sealing layer of the base to the glass bulb. Where low temperature operation is contemplated, the supplier should be consulted.

MECHANICAL DATA

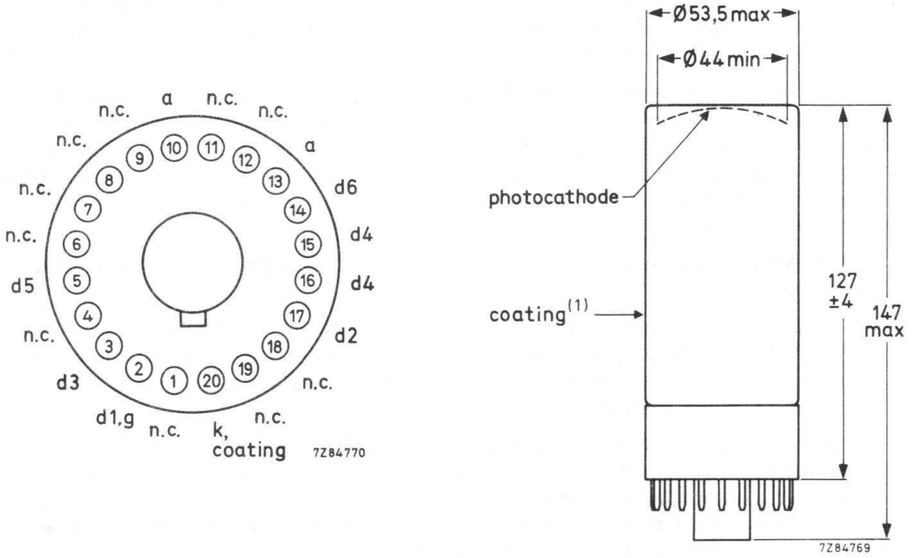

Fig. 4.

Note: Both anode contacts (pins 10 and 13) must be connected to prevent ringing of the anode pulse signal.

Base 20-pin (IEC67-1-42a, JEDEC B20-102)

Net mass 151 g

ACCESSORIES

socket type FE1020

(1) The envelope of the tube is covered with a conductive coating, connected to the cathode. On top of this a black paint is applied which is neither guaranteed to be light tight nor isolating. Care should be taken to avoid electric shock.

DEVELOPMENT DATA

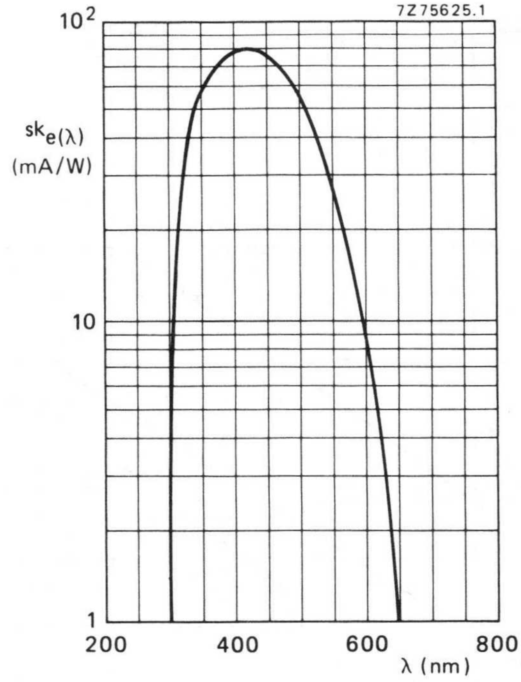

Fig. 5 Spectral sensitivity characteristic.

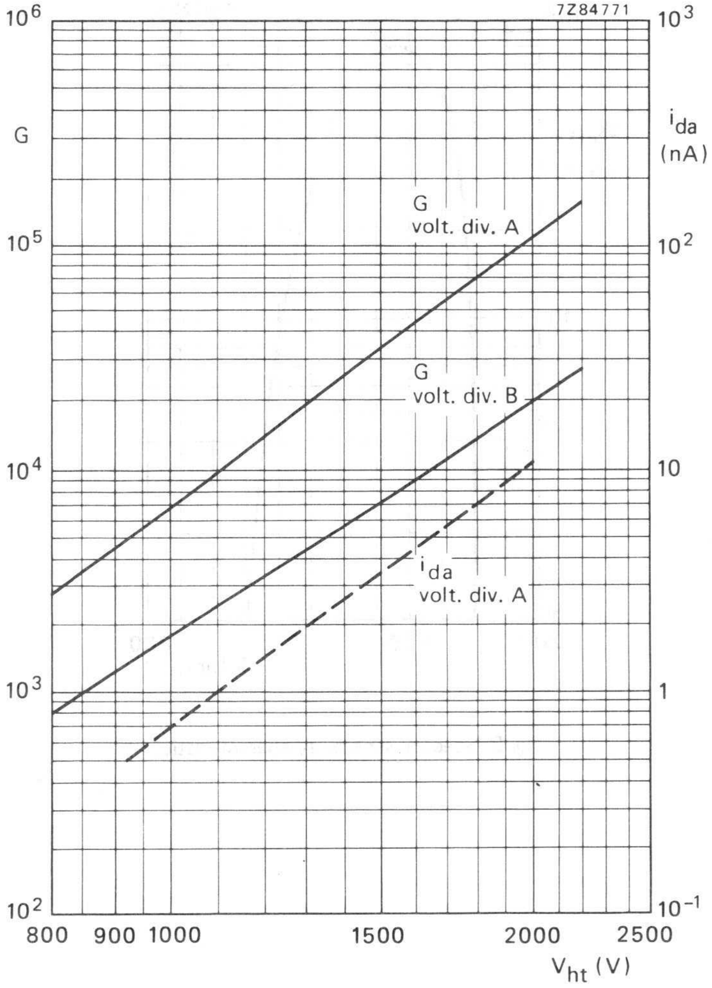

Fig. 6 Gain G and anode dark current, i_{da}, as a function of supply voltage V_{ht}.

i_{da} is given as a dotted line to indicate its principle behaviour only.

The XP2252 replaces XP2230
The XP2252B replaces XP2230B

12-STAGE PHOTOMULTIPLIER TUBE

- 45 mm useful diameter head-on type
- plano-concave window
- semi-transparent bi-alkaline type D photocathode
- high cathode sensitivity
- very good linearity and time characteristics
- good single electron spectrum resolution
- for high-energy physics experiments
- XP2252 (with 21-pin base) is interchangeable with XP2230;
  XP2252B (with 20-pin base) is: interchangeable with XP2230B and XP2262B;
  pin-compatible with XP2020;
  unilaterally pin-compatible with 56AVP-family tubes.

QUICK REFERENCE DATA

Spectral sensitivity characteristic			type D	
Useful diameter of the photocathode		>	45	mm
Quantum efficiency at 400 nm			25	%
Cathode blue sensitivity			10,5	μA/lmF
Single electron spectrum resolution			70	%
Supply voltage for a gain of 3×10^7			1850	V
Pulse amplitude resolution for ^{137}Cs		≈	7,2	%
Anode pulse rise time (with voltage divider B)		≈	2,0	ns
Linearity				
with voltage divider A (Fig. 2)	up to	≈	100	mA
with voltage divider B (Fig. 3)	up to	≈	250	mA

To be read in conjunction with *General Operational Recommendations Photomultiplier Tubes.*

GENERAL CHARACTERISTICS

Window

Material	borosilicate
Shape	plano-concave
Refractive index at 550 nm	1,48

				notes
Photocathode				2
Semi-transparent, head-on				
Material	Sb K Cs			
Useful diameter	>	45	mm	
Spectral sensitivity characteristic (Fig. 4)	type D			
Maximum spectral sensitivity		400 ± 30	nm	
Luminous sensitivity	≈	70	μA/lm	3
Blue sensitivity	typ. >	10,5 9,0	μA/lmF μA/lmF	1
Spectral sensitivity at 400 nm	≈	80	mA/W	4
Quantum efficiency at 400 nm		25	%	

Multiplier system

Number of stages		12		
Dynode structure	linear focused			
Dynode material	CuBe			
Capacitance				
anode to final dynode	≈	3	pF	
anode to all	≈	5	pF	

Magnetic field

When the photocathode is uniformly illuminated, the anode current is halved (at V_{ht} = 1400 V, voltage divider A) at a magnetic flux density of:
0,2 mT perpendicular to axis a (see Fig. 1);
0,1 mT parallel with axis a.

It is recommended that the tube be screened from magnetic fields by a mu-metal shield protruding > 15 mm beyond the photocathode.

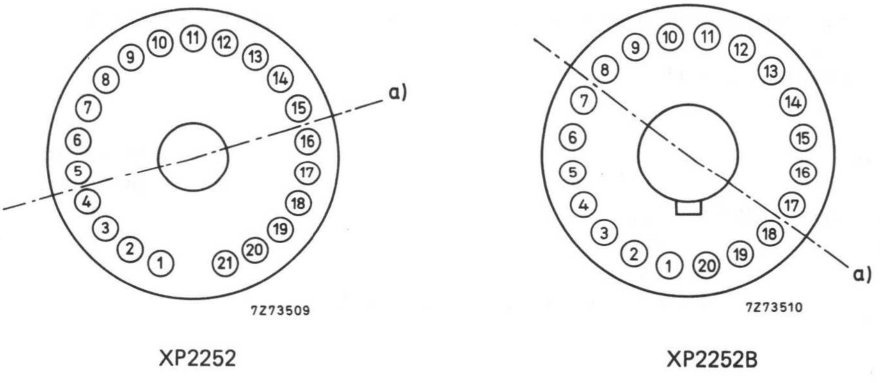

XP2252 XP2252B

Fig. 1 Axis a with respect to base pins (bottom view).

RECOMMENDED CIRCUITS

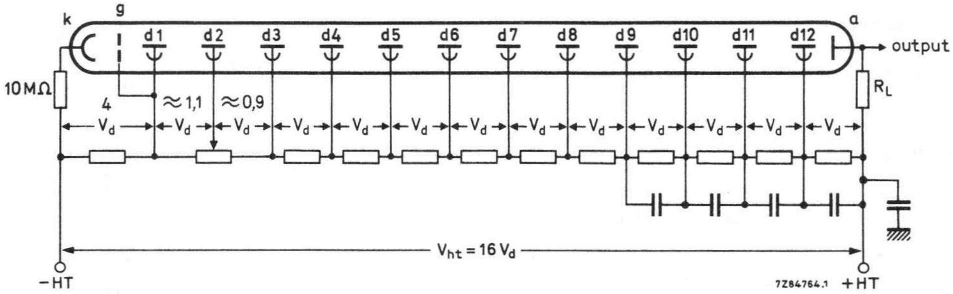

Fig. 2 Voltage divider A.

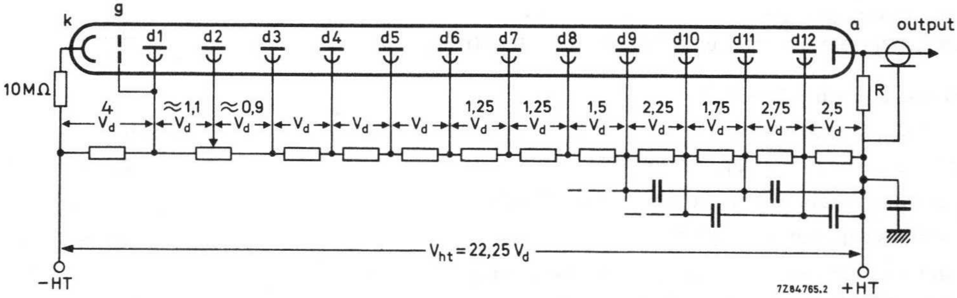

Fig. 3 Voltage divider B.

Typical values of capacitors 1 nF.

k = cathode;

g = accelerating electrode;

dn = dynode no.;

R_L = load resistor;

a = anode.

The cathode resistor of 10 MΩ limits the current should there be unintentional contact between the coating and earth when the anode is earthed.

The voltage, $V_{d2\text{-}d1}$, to be adjusted for maximum signal and optimum single electron spectrum resolution.

Resistor R (Fig. 3) connects the anode if the output cable is not terminated. Recommended value of R: 10 kΩ.

TYPICAL CHARACTERISTICS

With voltage divider A (Fig. 2)

					notes
Supply voltage for a gain of 3 x 10^7 (Fig. 7)		$<$ typ.	2400 1850	V V	5
Anode dark current at a gain of 3 x 10^7 (Fig. 7)		≈	10	nA	6
Background noise at a gain of 3 x 10^7		typ. $<$	1 x 10^3 6 x 10^3	c/s c/s	7
Single electron spectrum at a gain of 3 x 10^7 (Fig. 9)					
resolution		≈	70	%	8
peak to valley ratio		≈	3		9
Anode pulse rise time at V_{ht} = 1900 V		≈	2,3	ns	10
Anode pulse duration at half height at V_{ht} = 1900 V		≈	3,7	ns	10
Signal transit time at V_{ht} = 1900 V		≈	31	ns	10
Pulse amplitude resolution for ^{137}Cs at an anode blue sensitivity of 10 A/lmF		≈	7,2	%	1,11
Anode current linear within 2% at V_{ht} = 1900 V	up to	≈	100	mA	
Mean anode sensitivity deviation					12
long term (16 h)		≈	1	%	
after change of count rate		≈	1	%	
versus temperature between 0 °C and 40 °C at 450 nm		≈	0,2	%/K	

With voltage divider B (Fig. 3)

With voltage divider B (Fig. 3)					5
Gain at V_{ht} = 2400 V (Fig. 7)		≈	6 x 10^7		
Anode pulse rise time at V_{ht} = 2200 V		≈	2,0	ns	10
Anode pulse duration at half height at V_{ht} = 2200 V		≈	3	ns	10
Signal transit time at V_{ht} = 2200 V		≈	30	ns	10
Signal transit time difference between the centre of the photocathode and 18 mm from the centre at V_{ht} = 2200 V		≈	0,7	ns	
Anode current linear within 2% at V_{ht} = 2000 V	up to	≈	250	mA	

LIMITING VALUES (absolute maximum rating system)

Supply voltage	max.	2500	V	13
Continuous anode current	max.	0,2	mA	14
Voltage between first dynode and photocathode	max. min.	800 300	V V	15
Voltage between consecutive dynodes	max.	400	V	
Voltage between anode and final dynode	max. min.	600 80	V V	16
Ambient temperature range				
operational (for short periods of time)	max. min.	+80 −30	°C °C	17
continuous operation and storage	max. min.	+50 −30	°C °C	

NOTES

1. Blue sensitivity, expressed in μA/lmF, is measured with a tungsten filament lamp with a colour temperature of 2856 ± 5K. Light is transmitted through a blue filter (Corning CS no. 5-58, polished to half stock thickness).
2. The bialkaline photocathode has a significant resistance which increases rapidly with reducing temperature. It is therefore recommended that it should not be exposed to light of too great an intensity; the cathode current should be limited, for example, to 1 nA at room temperature or 0,1 nA at –30 °C. If too high a photocurrent is passed, the cathode can no longer be considered an equipotential surface, and the focusing of electrons onto the first dynode will be affected, resulting in departure from linearity.
3. Luminous sensitivity is measured with a tungsten filament lamp with a colour temperature of 2856 ± 5K.
4. Spectral sensitivity is measured with a tungsten filament lamp with a colour temperature of 2856 ± 5K. Light is transmitted through an interferential filter. Spectral sensitivity at 400 nm, expressed in A/W, can be estimated by multiplying the blue sensitivity, expressed in A/lmF, by $7{,}6 \times 10^3$ for this type of tube.
5. To obtain a peak pulse current greater than that obtainable with divider A, it is necessary to increase the inter-dynode voltage of the stages progressively. Divider circuit B is an example of a "progressive" divider, giving a compromise between gain, speed, and linearity. Other dividers can be conceived to achieve other compromises. It is generally recommended that the increase in voltage between one stage and the next be kept less than a factor of 2.
6. Wherever possible, the power supply should be arranged so that the cathode is earthed and the anode is at +HT, however, it is sometimes necessary to supply the tube with the anode earthed and the cathode at –HT. Under these circumstances, erratic noise and dark current are generally increased and unstable, particularly immediately after application of voltage. The glass envelope of the tube should be supported only by insulators with an insulation resistance of $> 10^{15}\,\Omega$.
7. Noise is measured at ambient temperature. After having been stored with its protective hood, the tube is placed in darkness with V_{ht} set to a value to give a gain of 3×10^7. After a 5 min. stabilization period noise pulses with a threshold of 1 pC (corresponding to 0,2 photoelectron) are recorded. Lower values can be obtained after a longer stabilization period.
8. The single electron spectrum resolution to be optimized by adjusting the dynode 2 voltage.
9. Peak to valley ratio is defined as the single electron peak value divided by the minimum value to the left of the peak.
10. Measured with a pulsed-light source, with a pulse duration (FWHM) of < 1 ns, the cathode being completely illuminated. The rise time is determined between 10% and 90% of the amplitude of the anode pulse. The signal transit time is measured between the instant at which the illuminating pulse at the cathode becomes maximum, and the instant at which the anode pulse attains its maximum. Rise time, pulse duration and transit time vary as a function of high tension supply voltage V_{ht}, approximately as $V_{ht}^{-1/2}$.

    Non-inductive resistors of 51 Ω are connected in the base of type XP2252B to d11 and d12. See also *General Operational Recommendations Photomultiplier Tubes.*
11. Pulse amplitude resolution for ^{137}Cs is measured with a NaI (Tl) cylindrical scintillator (Quartz et Silice ser. no.: 7256 or equivalent) with a diameter of 44 mm and a height of 50 mm. The count-rate used is ≈ 10^4 c/s.

12. The mean anode sensitivity deviation is measured by coupling an NaI (Tl) scintillator to the window of the tube. Long term (16 h) deviation is measured by placing a ^{137}Cs source at a distance from the scintillator such that the count rate is ≈ 10^4 c/s corresponding to an average anode current of ≈ 300 nA. Anode sensitivity deviation after change of count rate is measured with a ^{137}Cs source at a distance of the scintillator such that the count rate can be changed from 10^4 c/s to 10^3 c/s corresponding to an average anode current of ≈ 1 μA and ≈ 0,1 μA respectively. Both tests are carried out according to ANSI–N42–9–1972 of IEEE recommendations.
13. Total HT supply voltage, or the voltage at which the tube has a gain of 2 x 10^8, whichever is lower.
14. A value of < 10 μA is recommended for applications requiring good stability.
15. Minimum value to obtain good collection in the input optics.
16. When calculating the anode voltage the voltage drop across the load resistor should be taken into account.
17. For type XP2252B this range of temperatures is limited principally by stresses in the sealing layer of the base to the glass bulb. Where low temperature operation is contemplated, the supplier should be consulted.

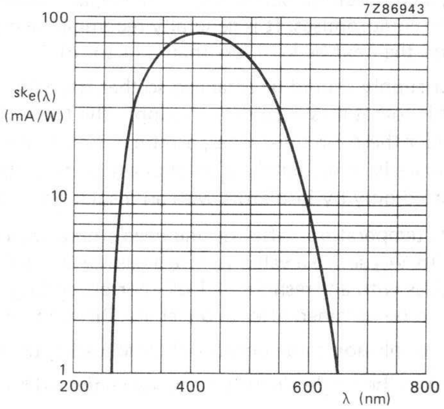

Fig. 4 Spectral sensitivity characteristic.

MECHANICAL DATA

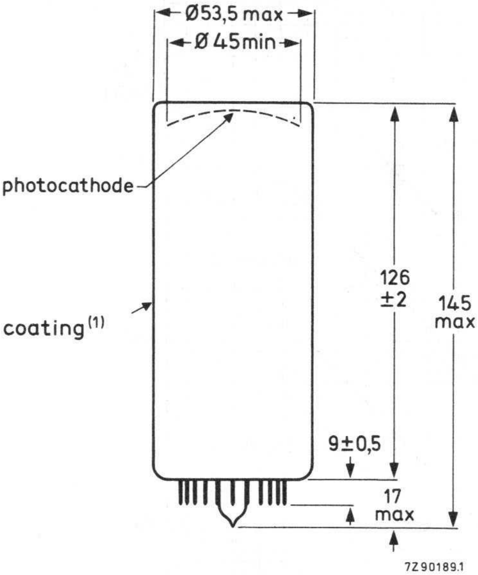

Fig. 5 XP2252.

Base 21-pin all glass

Net mass 160 g

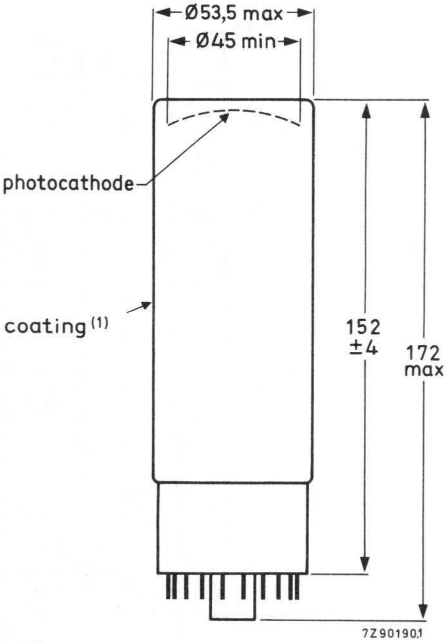

Fig. 6 XP2252B.

Base 20-pin (IEC 67-1-42a, JEDEC B20-102)

Net mass 190 g

PIN CONNECTIONS

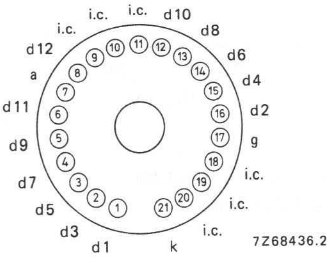

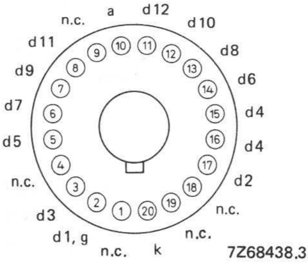

ACCESSORIES

Socket for XP2252	type FE2021
Socket for XP 2252B	type FE1020

(1) The envelope of the tube is covered with a conductive coating, connected to the cathode. On the top of this a black paint is applied which is neither guaranteed to be light tight nor isolating.
Care should be taken to avoid electric shock.

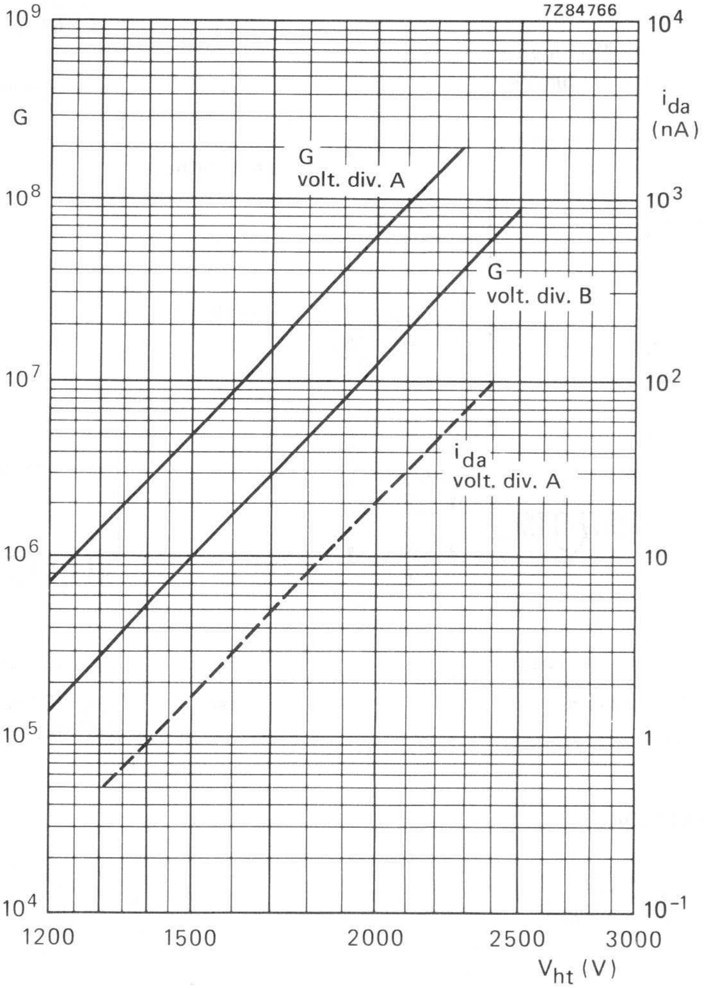

Fig. 7 Gain G and anode dark current, i_{da}, as a function of supply voltage V_{ht}; i_{da} is given as a dotted line to indicate its principle behaviour only.

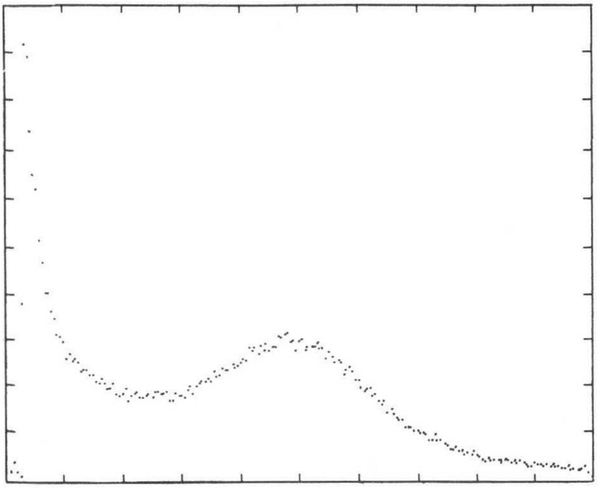

Fig. 8 Background noise spectrum, obtained with an XP2252 tube, series no. 9956. Gain: 3 x 10^7.

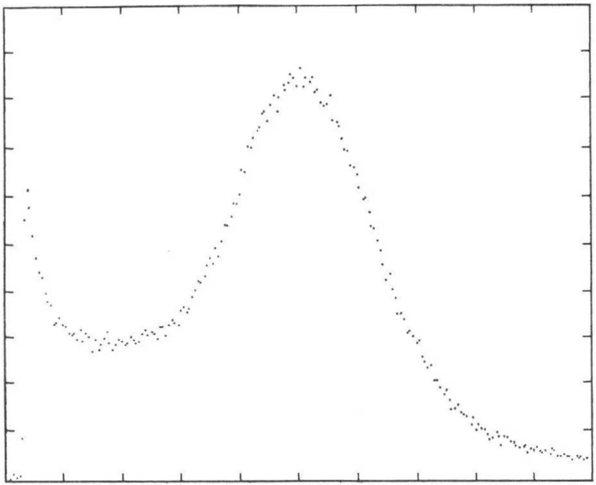

Fig. 9 Single electron spectrum obtained with an XP2252 tube, series no. 9956. Gain: 3 x 10^7. Resolution 64,4%. Peak to valley ratio: 2,9 (see Note 9).

12-STAGE PHOTOMULTIPLIER TUBE

The XP2254B is a 44 mm useful diameter head-on photomultiplier tube with a plano-concave fused silica window and a semi-transparent trialkaline type TU photocathode.
The tube is intended for use in optical applications where a high sensitivity in the region from ultraviolet to the near infrared is required combined with good time characteristics. The XP2254B is unilaterally interchangeable with 56AVP-family tubes.

QUICK REFERENCE DATA

Spectral sensitivity characteristic		type TU		
Useful diameter of the photocathode		>	44	mm
Spectral sensitivity of the photocathode at 700 nm			15	mA/W
Supply voltage for a gain of 3×10^7			2300	V
Anode pulse rise time (with voltage divider B′)		≈	1,5	ns
Linearity, with voltage divider B	up to	≈	280	mA

To be read in conjunction with *General Operational Recommendations Photomultiplier Tubes.*

GENERAL CHARACTERISTICS

Window

Material	fused silica		
Shape	plano-concave		
Refractive index			
at 400 nm	1,47		
at 250 nm	1,50		

Photocathode

Semi-transparent, head-on

Material	Sb Na K Cs		
Useful diameter	>	44	mm
Spectral sensitivity characteristic (Fig. 6)	type TU		
Maximum spectral sensitivity at		420 ± 30	nm
Spectral sensitivity at 700 nm	typ.	15	mA/W
	>	7	mA/W
Luminous sensitivity	≈	150	μA/lm

Multiplier system

Number of stages	12
Dynode structure	linear focused
Dynode material	CuBe

Capacitances

Grid 1 to k + d1 + acc + g2 + d5	≈	20 pF
Anode to final dynode	≈	4 pF
Anode to all	≈	7 pF

Magnetic field

See Fig. 9.

It is recommended that the tube be screened against the influence of magnetic fields by a mu-metal shield protruding > 15 mm beyond the photocathode.

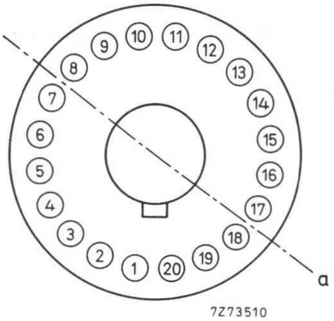

Fig. 1 Axis a with respect to base pins (bottom view).

RECOMMENDED CIRCUITS

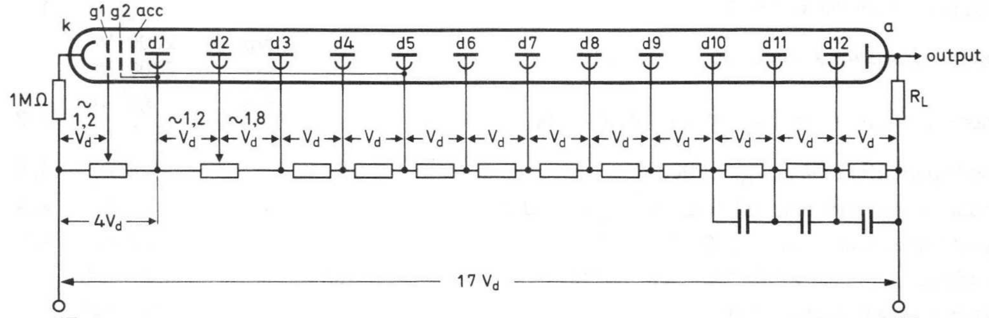

Fig. 2 Voltage divider type A.

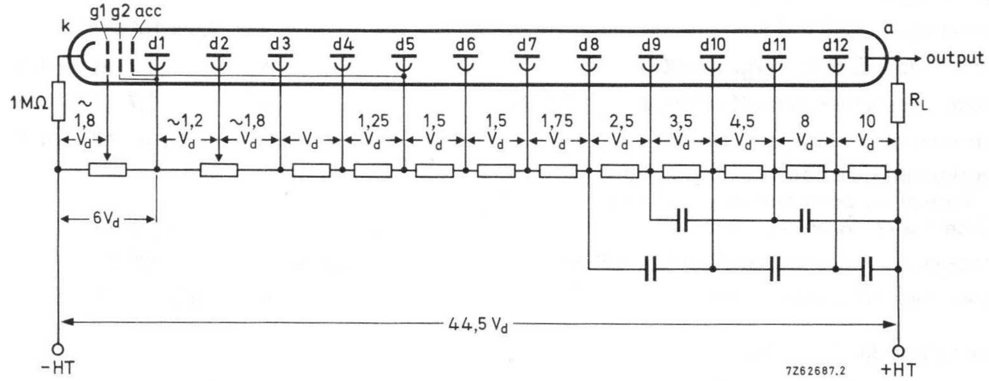

Fig. 3 Voltage divider type B.

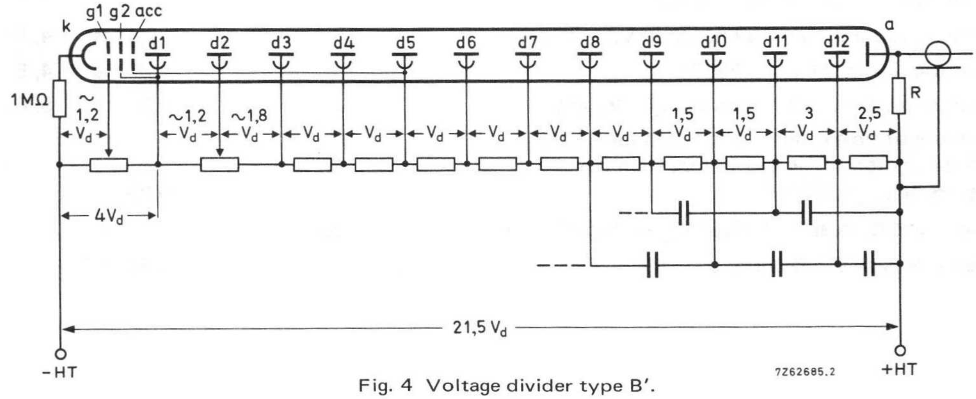

Fig. 4 Voltage divider type B'.

k = cathode
g1, g2 = focusing electrodes
acc = accelerating electrode
dn = dynode no.
a = anode
R_L = load resistor

R = This resistor connects the anode when the output cable is not terminated. Recommended value: 10 kΩ.

The cathode resistor of 1 MΩ limits the current in case of unintentional contact between the conductive coating and earth when the anode is earthed.
Typical value of capacitors: 1 nF.

TYPICAL CHARACTERISTICS

				notes
With voltage divider A (Fig. 2)				1
Supply voltage for a gain of 3 x 10^7 (Fig. 10)	typ. $<$		2300 V 2700 V	
Anode dark current at a gain of 3 x 10^7 (Fig. 10)	typ. $<$		60 nA 1500 nA	2, 3
Anode pulse rise time at V_{ht} = 2000 V		≈	1,6 ns	4, 5
Anode pulse duration at half height at V_{ht} = 2000 V		≈	3,7 ns	4, 5
Signal transit time at V_{ht} = 2000 V		≈	28 ns	4, 5
Anode current linear within 2% at V_{ht} = 2000 V	up to	≈	25 mA	
Obtainable peak anode current		≈	100 mA	
With voltage divider B (Fig. 3)				1
Gain at V_{ht} = 2800 V (Fig. 10)		≈	1,5 x 10^6	
Anode pulse rise time at V_{ht} = 2800 V		≈	1,7 ns	4, 5
Anode pulse duration at half height at V_{ht} = 2800 V		≈	2,7 ns	4, 5
Signal transit time at V_{ht} = 2800 V		≈	31 ns	4, 5
Signal transit time difference between the centre of the photocathode and 18 mm from the centre at V_{ht} = 2800 V		≈	0,25 ns	
Anode current linear within 2% at V_{ht} = 2800 V	up to	≈	280 mA	
Obtainable peak anode current		≈	0,5 to 1 A	
With voltage divider B' (Fig. 4)				1
Gain at V_{ht} = 2500 V (Fig. 10)		≈	1,5 x 10^7	
Anode pulse rise time at V_{ht} = 2500 V		≈	1,5 ns	4, 5
Anode pulse duration at half height at V_b = 2500 V		≈	2,4 ns	4, 5
Signal transit time at V_{ht} = 2500 V		≈	30 ns	4, 5
Signal transit time distribution at V_{ht} = 2500 V	σ	≈	0,25 ns	5, 6
Signal transit time difference between the centre of the photocathode and 18 mm from the centre at V_{ht} = 2500 V		≈	0,25 ns	
Anode current linear with 2% at V_{ht} = 2500 V	up to	≈	70 mA	
Obtainable peak anode current		≈	250 mA	

LIMITING VALUES (Absolute maximum rating system)

			notes
Supply voltage	max.	3000 V	7
Continuous anode current	max.	0,2 mA	8
Voltage between focusing electrode, g1 and photocathode	max.	300 V	
Voltage between first dynode and photocathode	max. min.	800 V 210 V	9
Voltage between consequtive dynodes (except d11 and d12)	max.	400 V	
Voltage between dynodes d11 and d12	max.	600 V	5
Voltage between anode and final dynode	max. min.	700 V 80 V	10
Ambient temperature range			11
operational (for short periods of time)	max. min.	+ 80 °C −30 °C	
continuous operation and storage	max. min.	+ 50 °C −30 °C	

DEVELOPMENT DATA

Notes

1. To obtain a peak pulse current greater than that obtainable with divider A, it is necessary to increase the inter-dynode voltages of the stages progressively. Dividers B and B′ are examples of "progressive" dividers, each giving a compromise between gain, speed, and linearity. Other dividers can be conceived to achieve other compromises. It is generally recommended that the increase in voltage between one stage and the next be kept less than a factor of 2.
2. Wherever possible, the power supply should be arranged so that the cathode is earthed and the anode is at + HT, however, it is sometimes necessary to supply the tube with the anode earthed and the cathode at –HT. Under these circumstances, erratic noise and dark current are generally increased and unstable, particularly immediately after application of voltage. The tube is provided with a conductive coating connected to the cathode. It is recommended that, if a metal shield is used, this should be kept at cathode potential. This implies safety precautions to protect the user. The envelope of the tube should be supported only by insulators having an insulation resistance of $> 10^{15}\,\Omega$.
3. Dark current is measured at ambient temperature, after a stabilization period of the tube in darkness ($\approx$ ¼ h).
4. Measured with a pulsed light source, with a pulse duration (FWHM) of < 1 ns, the cathode being completely illuminated. The rise time is determined between 10% and 90% of the amplitude of the anode pulse. The signal transit time is measured between the instant at which the illuminating pulse at the cathode becomes maximum, and the instant at which the anode pulse attains its maximum. Rise time, pulse duration and transit time vary as a function of high tension supply voltage V_{ht}, approximately as $V_{ht}^{-1/2}$.
5. Non-inductive resistors of 51 Ω are incorporated in the base connected to d11 and d12. See also *General Operational Recommendations Photomultiplier Tubes.*
6. Transit time fluctuations of single electrons leaving the photocathode result in a transit time distribution at the anode. This distribution is characterized by its standard deviation (σ).
7. Total HT supply voltage, or the voltage at which the tube has a gain of 2×10^8, whichever is lower.
8. A value of $< 10\ \mu A$ is recommended for applications requiring good stability.
9. Minimum value to obtain good collection in the inputs optics.
10. When calculating the anode voltage the voltage drop across the load resistor should be taken into account.
11. This range of temperatures is limited principally by stresses in the sealing layer of the base to the glass bulb. Where low temperature operation is contemplated, the supplier should be consulted.

MECHANICAL DATA

(1) The envelope of the tube is covered with a conductive coating, connected to the cathode. Care should be taken to avoid electric shock.

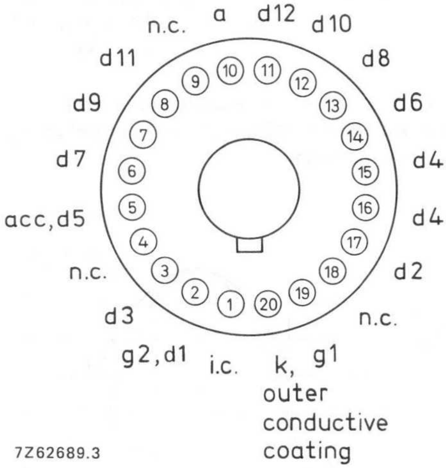

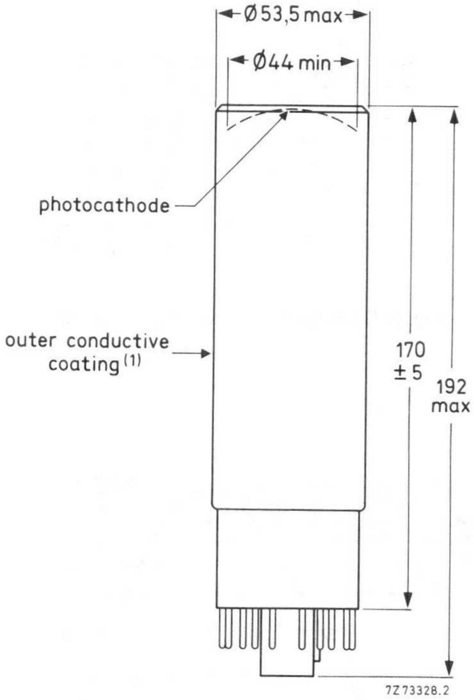

Fig. 5.

The base connections of the XP2254B are such that the tube is unilaterally interchangeable with the 56AVP-family tubes.

Base	20-pin (JEDEC B20-102)
Net mass	240 g

ACCESSORIES

Socket	type FE1020

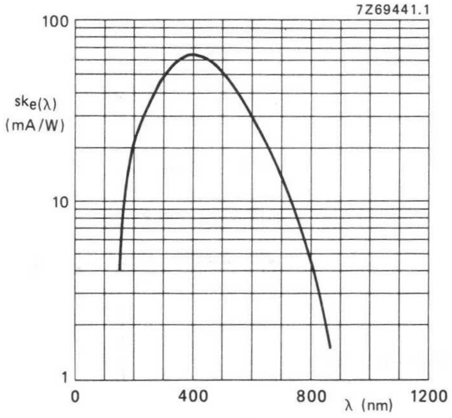

Fig. 6 Spectral sensitivity characteristic.

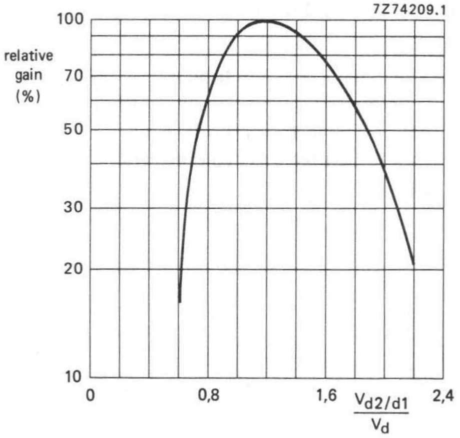

Fig. 7 Relative gain as a function of the voltage between d2 and d1, normalized to V_d $V_{d3/d1}$ constant.

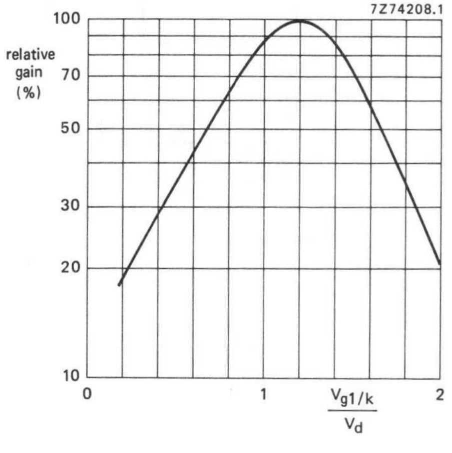

Fig. 8 Relative gain as a function of the voltage between grid 1 and cathode, normalized to V_d. $V_{d1/k}$ constant.

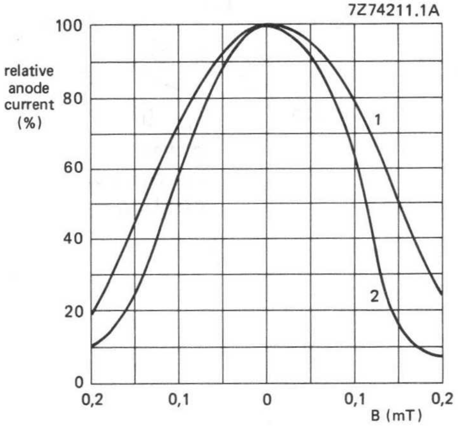

Fig. 9 Relative anode current as a function of the magnetic flux density B.

1. ⊥ axis a

2. // axis a

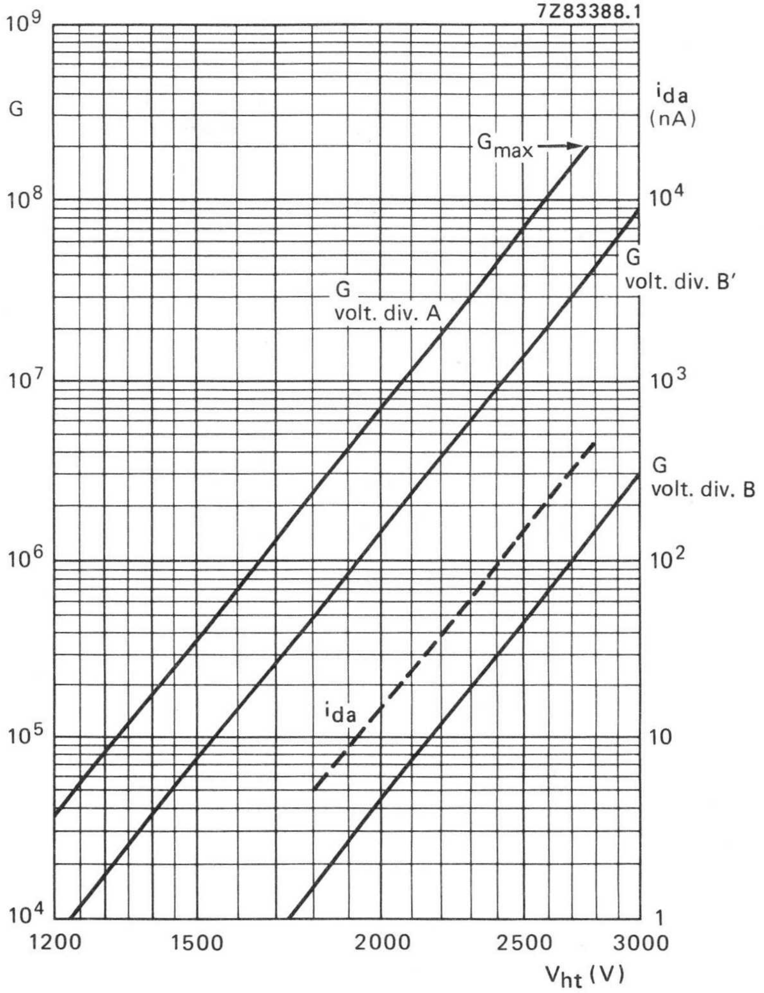

Fig. 10 Gain, G, and anode dark current, i_{da}, as a function of supply voltage V_{ht}.

DEVELOPMENT DATA

The XP2262 replaces XP2232
The XP2262B replaces XP2232B, 56AVP and 56DVP

12-STAGE PHOTOMULTIPLIER TUBE

- 44 mm useful diameter head-on type
- plano-concave window
- semi-transparent bi-alkaline type D photocathode
- high cathode sensitivity
- very good linearity and time characteristics
- good single electron spectrum resolution
- for high-energy physics experiments
- XP2262 (with 19-pin base) is interchangeable with XP2232;
  XP2262B (with 20-pin base) is: interchangeable with XP2232B;
  pin-compatible with XP2020 and XP2230B;
  unilaterally pin-compatible with 56AVP-family tubes.

QUICK REFERENCE DATA

Spectral sensitivity characteristic	type D
Useful diameter of the photocathode	> 44 mm
Quantum efficiency at 400 nm	25%
Cathode blue sensitivity	10,5 μA/lmF
Single electron spectrum resolution	70%
Supply voltage for a gain of 3×10^7	1850 V
Pulse amplitude resolution for ^{137}Cs	≈ 7,2%
Anode pulse rise time (with voltage divider B)	≈ 2,0 ns
Linearity	
with voltage divider A (Fig. 2)	up to ≈ 100 mA
with voltage divider B (Fig. 3)	up to ≈ 250 mA

To be read in conjunction with *General Operational Recommendations Photomultiplier Tubes.*

GENERAL CHARACTERISTICS

Window

Material	lime-glass
Shape	plano-concave
Refractive index at 400 nm	1,54

Photocathode		notes
Semi-transparent, head-on		2
Material	Sb K Cs	
Useful diameter	> 44 mm	
Spectral sensitivity characteristic (Fig. 6)	type D	
Maximum spectral sensitivity	400 ± 30 nm	
Luminous sensitivity	≈ 70 μA/lm	3
Blue sensitivity	typ. 10,5 μA/lmF > 9,0 μA/lmF	1
Spectral sensitivity at 400 nm	≈ 80 mA/W	4
Quantum efficiency at 400 nm	25%	

Multiplier system	
Number of stages	12
Dynode structure	linear focused
Dynode material	Cu Be
Capacitances	
anode to final dynode	≈ 3 pF
anode to all	≈ 5 pF

magnetic field

When the photocathode is illuminated uniformly, the anode current is halved at V_{ht} = 1400 V, voltage divider A at a magnetic flux density of:
0,2 mT perpendicular to axis a (see Fig. 1);
0,1 mT parallel with axis a.

It is recommended that the tube is screened against the influence of magnetic fields by a mu-metal shield protruding > 15 mm beyond the photocathode.

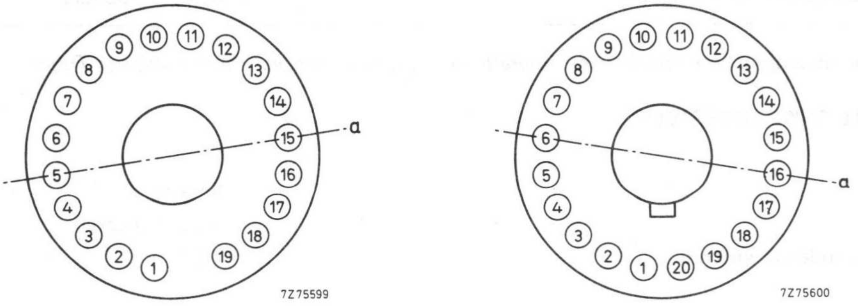

Fig. 1 Axis a with respect to base pins (bottom view).

RECOMMENDED CIRCUITS

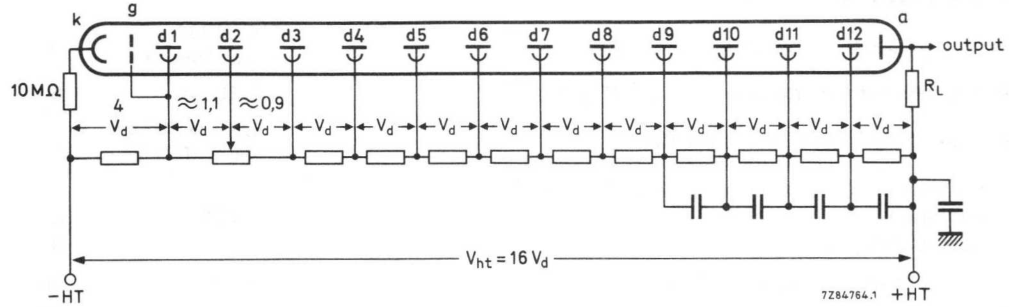

Fig. 2 Voltage divider A.

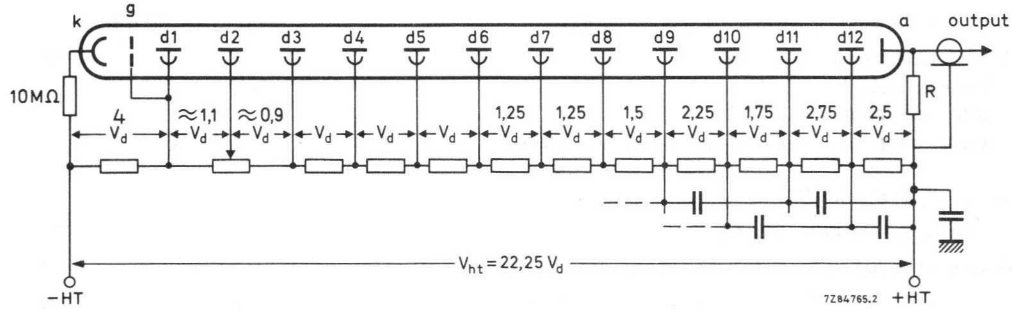

Fig. 3 Voltage divider B.

k = cathode;
g = accelerating electrode;
dn = dynode no.;
R_L = load resistor;
a = anode.

Typical values of capacitors 1 nF.

The cathode resistor of 10 MΩ limits the current should there be unintentional contact between the coating and earth when the anode is earthed.

The voltage, $V_{d2\text{-}d1}$, to be adjusted for maximum signal and optimum single electron spectrum resolution.

Resistor R (Fig. 3) connects the anode if the output cable is not terminated. Recommended value of R : 10 kΩ.

TYPICAL CHARACTERISTICS

With voltage divider A (Fig. 2)

		notes
Supply voltage for a gain of 3×10^7 (Fig. 8)	< 2400 V typ. 1850 V	5
Anode dark current at a gain of 3×10^7 (Fig. 8)	≈ 10 nA	6
Background noise at a gain of 3×10^7	typ. 1×10^3 c/s < 6×10^3 c/s	7
Single electron spectrum at a gain of 3×10^7 (Fig. 7)		
resolution	≈ 70%	8
peak to valley ratio	≈ 3	9
Anode pulse rise time at V_{ht} = 1900 V	≈ 2,3 ns	10
Anode pulse duration at half height at V_{ht} = 1900 V	≈ 3,7 ns	10
Signal transit time at V_{ht} = 1900 V	≈ 31 ns	10
Pulse amplitude resolution for ^{137}Cs at an anode blue sensitivity of 10 A/lmF	≈ 7,2%	1, 11
Anode current linear within 2% at V_{ht} = 1900 V	up to ≈ 100 mA	
Mean anode sensitivity deviation		12
long term (16 h)	≈ 1%	
after change of count rate	≈ 1%	
versus temp. between 0 °C and 40 °C at 450 nm	≈ 0,2%/K	

With voltage divider B (Fig. 3)

		5
Gain at V_{ht} = 2400 V (Fig. 8)	≈ 6×10^7	
Anode pulse rise time at V_{ht} = 2200 V	≈ 2,0 ns	10
Anode pulse duration at half height at V_{ht} = 2200 V	≈ 3 ns	10
Signal transit time at V_{ht} = 2200 V	≈ 30 ns	10
Signal transit time difference between the centre of the photocathode and 18 mm from the centre at V_{ht} = 2200 V	≈ 0,7 ns	
Anode current linear within 2% at V_{ht} = 2000 V	up to ≈ 250 mA	

LIMITING VALUES (absolute maximum rating system)

Supply voltage	max. 2500 V	13
Continuous anode current	max. 0,2 mA	14
Voltage between first dynode and photocathode	max. 800 V min. 300 V	15
Voltage between consecutive dynodes	max. 400 V	
Voltage between anode and final dynode	max. 600 V min. 80 V	16
Ambient temperature range		
operational (for short periods of time)	max. +80 °C min. −30 °C	17
continuous operation and storage	max. +50 °C min. −30 °C	

NOTES

1. Blue sensitivity, expressed in μA/lmF, is measured with a tungsten filament lamp with a colour temperature of 2856 ± 5K. Light is transmitted through a blue filter (Corning CS no. 5-58, polished to half stock thickness).
2. The bialkaline photocathode has a significant resistance which increases rapidly with reducing temperature. It is therefore recommended that it should not be exposed to light of too great an intensity; the cathode current should be limited, for example, to 1 nA at room temperature or 0,1 nA at −30 °C. If too high a photocurrent is passed, the cathode can no longer be considered an equipotential surface, and the focusing of electrons onto the first dynode will be affected, resulting in departure from linearity.
3. Luminous sensitivity is measured with a tungsten filament lamp with a colour temperature of 2856 ± 5 K.
4. Spectral sensitivity is measured with a tungsten filament lamp with a colour temperature of 2856 ± 5 K. Light is transmitted through an interferential filter. Spectral sensitivity at 400 nm, expressed in A/W, can be estimated by multiplying the blue sensitivity, expressed in A/lmF, by $7{,}6 \times 10^3$ for this type of tube.
5. To obtain a peak pulse current greater than that obtainable with divider A, it is necessary to increase the inter-dynode voltage of the stages progressively. Divider circuit B is an example of a "progressive" divider, giving a compromise between gain, speed, and linearity. Other dividers can be conceived to achieve other compromises. It is generally recommended that the increase in voltage between one stage and the next be kept less than a factor of 2.
6. Wherever possible, the power supply should be arranged so that the cathode is earthed and the anode is at + HT, however, it is sometimes necessary to supply the tube with the anode earthed and the cathode at −HT. Under these circumstances, erratic noise and dark current are generally increased and unstable, particularly immediately after application of voltage. The glass envelope of the tube should be supported only by insulators with an insulation resistance of $> 10^{15}\ \Omega$.
7. Noise is measured at ambient temperature. After having been stored with its protective hood, the tube is placed in darkness with V_{ht} set to a value to give a gain of 3×10^7. After a 5 min. stabilization period noise pulses with a threshold of 1 pC (corresponding to 0,2 photoelectron) are recorded. Lower values can be obtained after a longer stabilization period.
8. The single electron spectrum resolution to be optimized by adjusting the dynode 2 voltage.
9. Peak to valley ratio is defined as the single electron peak value divided by the minimum value to the left of the peak.
10. Measured with a pulsed-light source, with a pulse duration (FWHM) of < 1 ns, the cathode being completely illuminated. The rise time is determined between 10% and 90% of the amplitude of the anode pulse. The signal transit time is measured between the instant at which the illuminating pulse at the cathode becomes maximum, and the instant at which the anode pulse attains its maximum. Rise time, pulse duration and transit vary as a function of high tension supply voltage V_{ht}, approximately as $V_{ht}^{-1/2}$.
    Non-inductive resistors of 51 Ω are connected in the base of type XP2262B to d11 and d12. See also *General Operational Recommendations Photomultiplier Tubes.*
11. Pulse amplitude resolution for ^{137}Cs is measured with a NaI (Tl) cylindrical scintillator (Quartz et Silice ser. no.: 7256 or equivalent) with a diameter of 44 mm and a height of 50 mm. The count-rate used is $\approx 10^4$ c/s.

12. The mean anode sensitivity deviation is measured by coupling an NaI (Tl) scintillator to the window of the tube. Long term (16 h) deviation is measured by placing a ^{137}Cs source at a distance from the scintillator such that the count rate is $\approx 10^4$ c/s corresponding to an average anode current of $\approx$ 300 nA. Anode sensitivity deviation after change of count rate is measured with a ^{137}Cs source at a distance of the scintillator such that the count rate can be changed from 10^4 c/s to 10^3 c/s corresponding to an average anode current of ≈ 1 µA and $\approx 0,1$ µA respectively. Both tests are carried out according to ANSI–N42–9–1972 of IEEE recommendations.
13. Total HT supply voltage, or the voltage at which the tube has a gain of 2×10^8, whichever is lower.
14. A value of < 10 µA is recommended for applications requiring good stability.
15. Minimum value to obtain good collection in the input optics.
16. When calculating the anode voltage the voltage drop across the load resistor should be taken into account.
17. For type XP2262B this range of temperatures is limited principally by stresses in the sealing layer of the base to the glass bulb. Where low temperature operation is contemplated, the supplied should be consulted.

MECHANICAL DATA

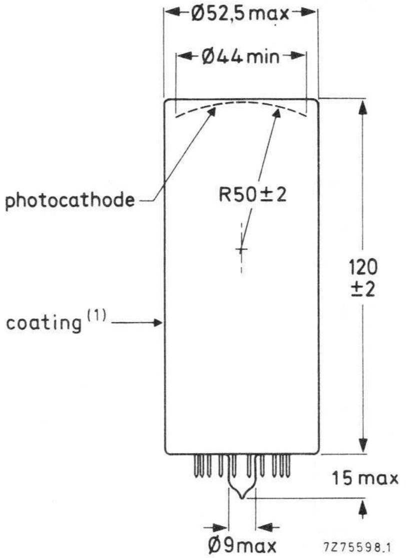

Fig. 4 XP2262.

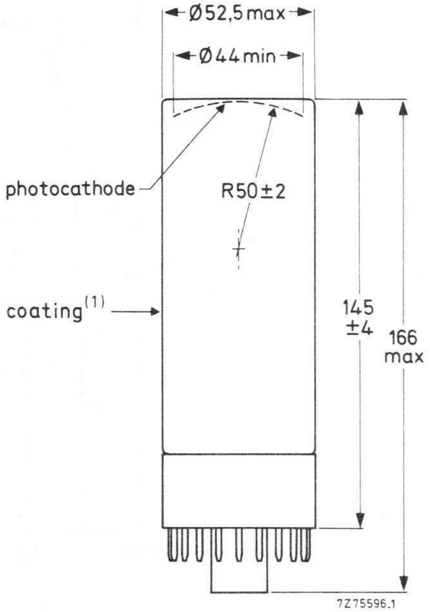

Fig. 5 XP2262B.

Base	19-pin all glass
Net mass	125 g

Base	20-pin (IEC 67-1-42a, JEDEC B20-102)
Net mass	162 g

PIN CONNECTIONS

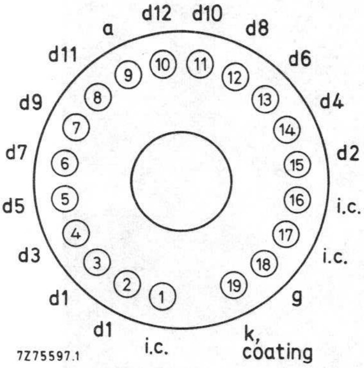

XP2262

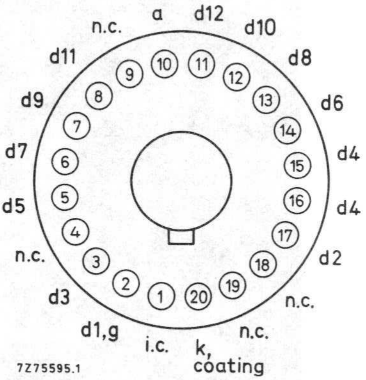

XP2262B

ACCESSORIES

Socket

for XP2262	type FE2019
for XP2262B	type FE1020

---

(1) The envelope of the tube is covered with a conductive coating, connected to the cathode. On top of this a black paint is applied which is neither guaranteed to be light tight nor isolating.
Care should be taken to avoid electric shock.

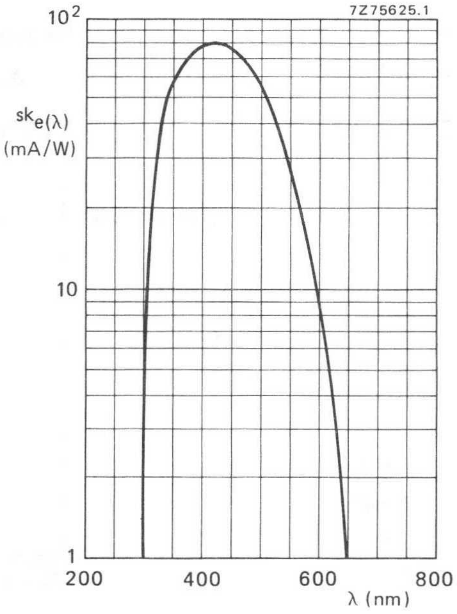

Fig. 6 Spectral sensitivity characteristic.

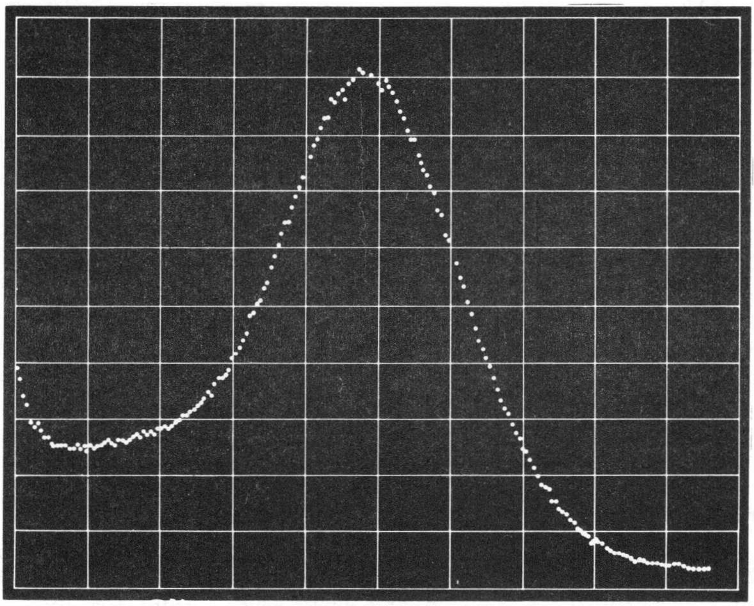

Fig. 7 Single electron spectrum obtained with an XP2262 tube.

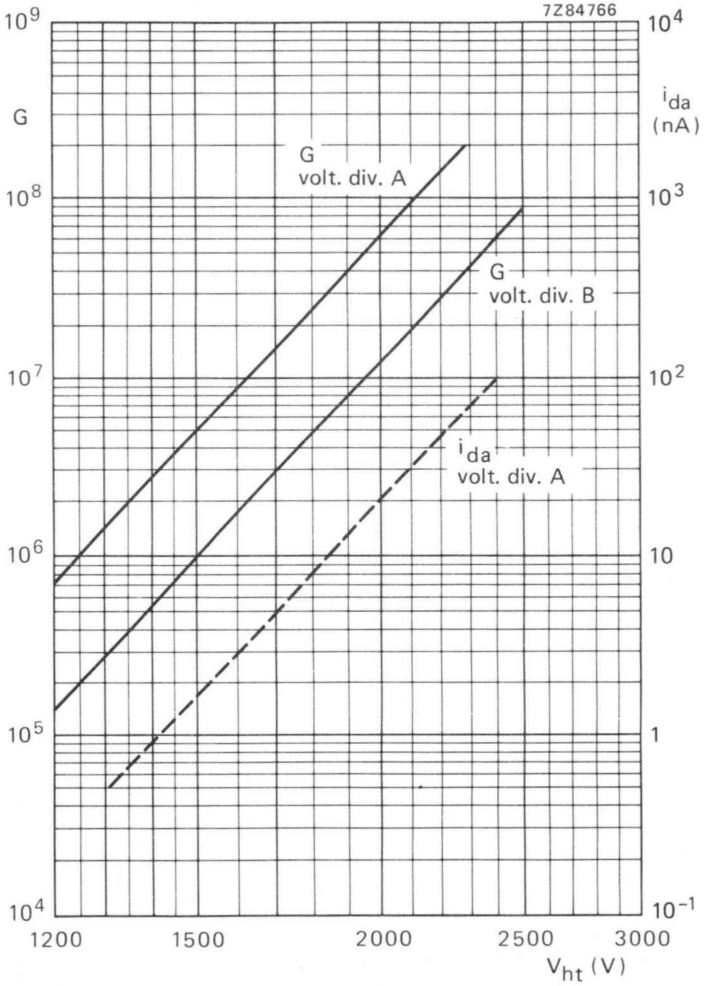

Fig. 8 Gain G and anode dark current, i_{da}, as a function of supply voltage V_{ht}.

i_{da} is given as a dotted line to indicate its principle behaviour only.

12-STAGE PHOTOMULTIPLIER TUBE

The XP2312 and XP2312B are 68 mm useful diameter head-on photomultiplier tubes with a plano-concave window and a semi-transparant bialkaline type D photocathode. The tubes are intended for use in nuclear physics where the number of photons to be detected is very low and where good time characteristics and a good linearity are required (coincidence measurements, Cerenkov counters). The XP2312B is provided with a 20-pin plastic base. The XP2312 has a 19-pin all-glass base.

QUICK REFERENCE DATA

Spectral sensitivity characteristic		type D		
Useful diameter of the photocathode		>	68	mm
Quantum efficiency at 400 nm			26	%
Cathode spectral sensitivity at 400 nm			85	mA/W
Supply voltage for a gain of 3 x 10^7			2000	V
Pulse amplitude resolution for ^{137}Cs		≈	8,0	%
Anode pulse rise time (with voltage divider B)		≈	2,5	ns
Linearity				
with voltage divider A	up to	≈	100	mA
with voltage divider B	up to	≈	250	mA

To be read in conjunction with *General Operational Recommendations Photomultiplier Tubes.*

GENERAL CHARACTERISTICS

Window

Material	borosilicate		
Shape	plano-concave		
Refractive index at 550 nm		1,48	

Photocathode (note 1)

Semi-transparent, head-on

Material	SbKCs		
Useful diameter	>	68	mm
Spectral sensitivity characteristic (Fig. 6)	type D		
Maximum spectral sensitivity at	400 ± 30		nm
Quantum efficiency at 400 nm		26	%
Spectral sensitivity at 400 nm	typ.	85	mA/W
	>	65	mA/W

Multiplier system

Number of stages	12
Dynode structure	linear focused
Dynode material	Cu Be
Capacitances	
anode to final dynode	≈ 3 pF
anode to all	≈ 5 pF

Magnetic field

When the photocathode is illuminated uniformly, the anode current is halved (at V_{ht} = 1500 V, voltage divider A) at a magnetic flux density of:
0,2 mT perpendicular to axis a (see Fig. 1);
0,1 mT parallel with axis a

It is recommended that the tube be screened against the influence of magnetic fields by a mu-metal shield protruding > 15 mm beyond the photocathode.

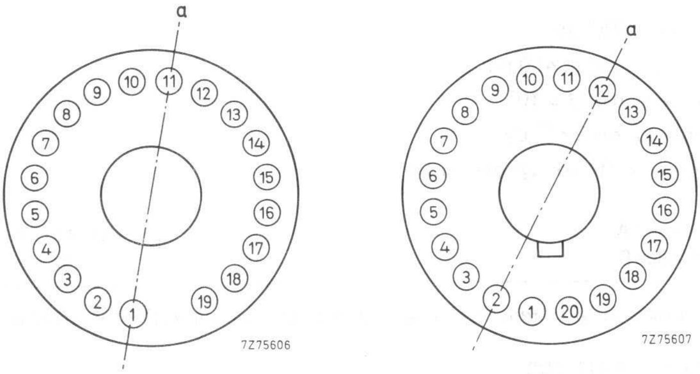

XP2312 XP2312B

Fig. 1 Axis a with respect to base pins (bottom view).

RECOMMENDED CIRCUITS

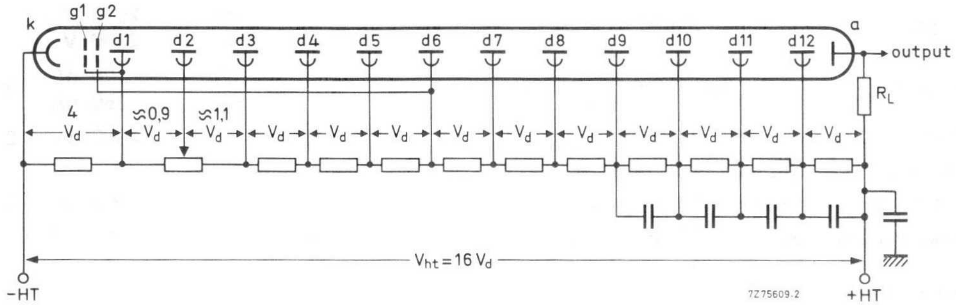

Fig. 2 Voltage divider A.

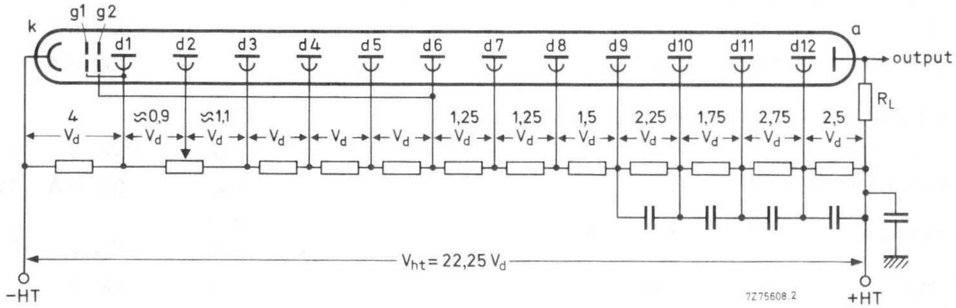

Fig. 3 Voltage divider B.

Typical value of capacitors: 1 nF; k = cathode; g1, g2 = accelerating electrodes; dn = dynode no.; a = anode; R_L = load resistor.

TYPICAL CHARACTERISTICS

					notes
With voltage divider A (Fig. 2)					2
Supply voltage for a gain of 3×10^7 (Fig. 7)		typ. <	2000 2500	V V	
Anode dark current at a gain of 3×10^7 (Fig. 7)		typ. <	25 250	nA nA	3, 4
Background noise at a gain of 3×10^7 (Fig. 7)		≈	2000	c/s	5
Pulse amplitude resolution for ^{137}Cs at an anode spectral sensitivity of 12 kA/W		≈	8,0	%	6
Anode current linear within 2% at V_{ht} = 2000 V	up to	≈	100	mA	
With voltage divider B (Fig. 3)					2
Gain at V_{ht} = 2000 V (Fig. 7)		≈	6×10^6		
Anode pulse rise time at V_{ht} = 2000 V		≈	2,5	ns	7
Anode pulse duration at half height at V_{ht} = 2000 V		≈	3,5	ns	7
Signal transit time at V_{ht} = 2000 V		≈	35	ns	7
Signal transit time difference between the centre of the photocathode and 30 mm from the centre at V_{ht} = 1800 V		≈	0,7	ns	
Anode current linear within 2% at V_{ht} = 2000 V	up to	≈	250	mA	

LIMITING VALUES (Absolute maximum rating system)

Supply voltage	max.	2500	V	8
Continuous anode current	max.	0,2	mA	12
Voltage between first dynode and photocathode	max. min.	700 300	V V	9
Voltage between consecutive dynodes	max.	400	V	
Voltage between g2 and photocathode (g2 normally connected to d6)	max.	1500	V	
Voltage between anode and final dynode	max. min.	600 80	V V	10
Ambient temperature range operational (for short periods of time)	max. min.	+ 80 −30	°C °C	11
continuous operation and storage	max. min.	+ 50 −30	°C °C	

Notes

1. The bialkaline photocathode has a significant resistance which increases rapidly with reducing temperature. It is thus recommended that it should not be subjected to light of too great an intensity; the cathode current should be limited to, for example, 1 nA at room temperature or 0,1 nA at −30 °C. If too high a photocurrent is passed, the cathode can no longer be considered to be an equipotential surface, and the focusing of electrons onto the first dynode will be affected, resulting in departures of linearity.
2. To obtain a peak pulse current greater than that obtainable with divider A, it is necessary to increase the inter-dynode voltages of the stages progressively. Divider circuit B is an example of a "progressive" divider, giving a compromise between gain, speed, and linearity.
   Other dividers can be conceived to achieve other compromises. It is generally recommended that the increase in voltage between one stage and the next be kept less than a factor of 2.
3. Wherever possible, the power supply should be arranged so that the cathode is earthed and the anode is at + HT, however, it is sometimes necessary to supply the tube with the anode earthed and the cathode at −HT. Under these circumstances, erratic noise and dark current are generally increased and unstable, particularly immediately after application of voltage. The glass envelope of the tube should be supported only by insulators having an insulation resistance of $> 10^{15}\,\Omega$.
4. Dark current is measured at ambient temperature, after a stabilization period of the tube in darkness (≈¼ h).
5. After having been stored with its protective hood, the tube is placed in darkness with V_{ht} set to a value to give a gain of 3×10^7. After a 30 min stabilization period noise pulses with a threshold of $1{,}4 \times 10^{-12}$ C (corresponding to 0,3 photoelectron) are recorded (Fig. 7).
6. Pulse amplitude resolution for ^{137}Cs is measured with a NaI(Tl) cylindrical scintillator (Quartz et Silice ser. no. 4170 equivalent) with a diameter of 75 mm and a height of 75 mm. The count rate used is $\approx 10^4$ c/s.
7. Measured with a pulsed-light source, with a pulse duration (FWHM) of < 1 ns, the cathode being completely illuminated.
   The rise time is determined between 10% and 90% of the amplitude of the anode pulse.
   The signal transit time is measured between the instant at which the illuminating pulse at the cathode becomes maximum, and the instant at which the anode pulse attains its maximum. Rise time, pulse duration and transit time vary as a function of high tension supply voltage V_{ht}, approximately as $V_{ht}^{-1/2}$.

   Non-inductive resistors of 51 Ω are connected in the base of type XP2312B to d11 and d12.
   See also *General Operational Recommendations Photomultiplier Tubes.*
8. Total HT supply voltage, or the voltage at which the tube has a gain of 2×10^8, whichever is lower.
9. Minimum value to obtain good collection in the input optics.
10. When calculating the anode voltage, the voltage drop across the load resistor should be taken into account.
11. For type XP2312B this range of temperatures is limited principally by stresses in the sealing layer of the base to the glass bulb. Where low temperature operation is contemplated, the supplier should be consulted.

MECHANICAL DATA

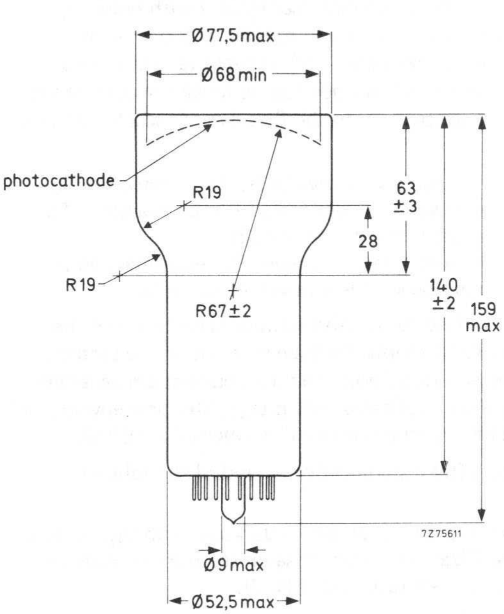

Fig. 4 XP2312.

Base	19-pin all-glass
Net mass	215 g

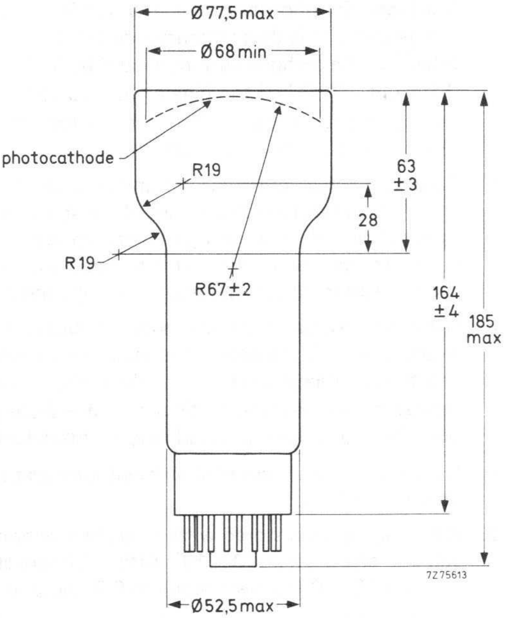

Fig. 5 XP2312B.

Base*	20-pin IEC 67-1-42a, Jedec B20-102
Net mass	252 g

PIN CONNECTIONS

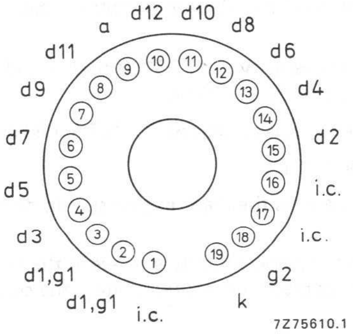

XP2312

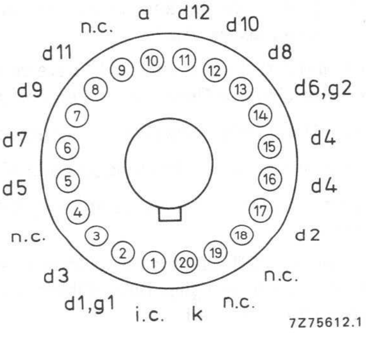

XP2312B

ACCESSORIES

Socket

for XP2312	type FE2019
for XP2312B	type FE1020

* This tube can be inserted in sockets, wired for XP2020 or 56 AVP-family tubes.

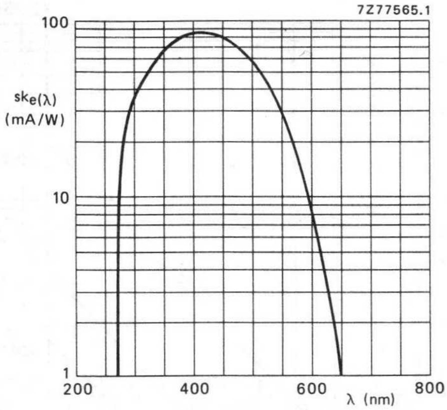

Fig. 6 Spectral sensitivity characteristic.

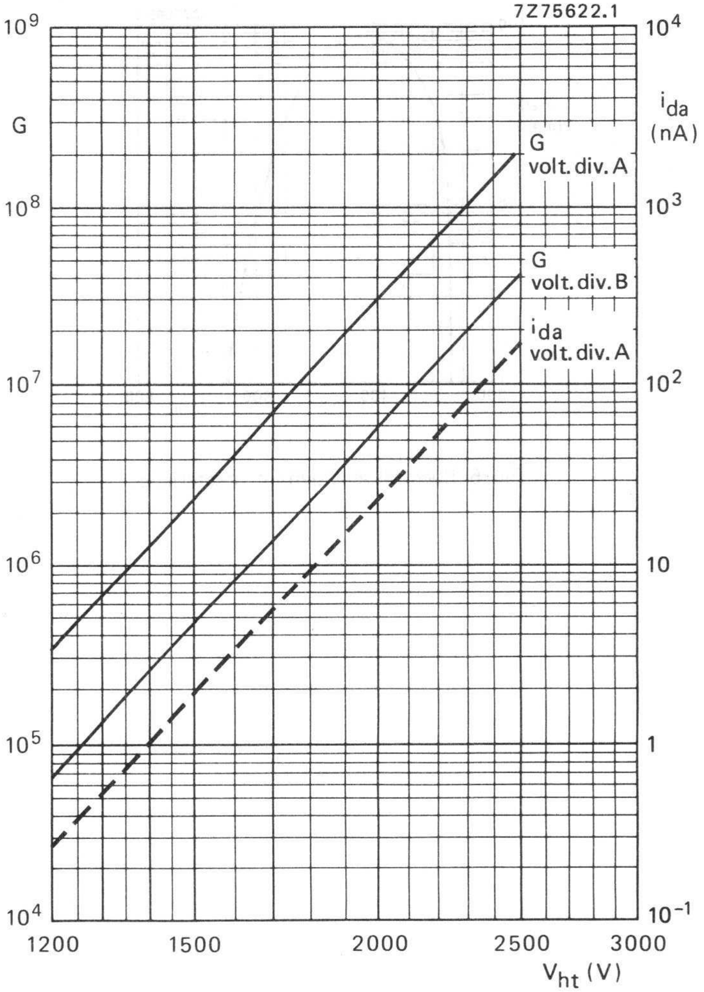

Fig. 7 Gain G, and anode dark current i_{da} as a function of the supply voltage V_{ht}.

XP2412 replaces XP2030UB
XP2412B replaces XP2030

10-STAGE VENETIAN BLIND PHOTOMULTIPLIER TUBES

- 70 mm useful diameter head-on type
- Flat window
- Semi-transparent bi-alkaline type D photocathode
- High cathode sensitivity; excellent collection from the entire cathode
- Very good pulse amplitude resolution
- Very low dark current
- Very good stability
- For scintillation detection applications, e.g. gamma cameras, high energy physics experiments

QUICK REFERENCE DATA

Spectral sensitivity characteristic	type D
Useful diameter of the photocathode	> 70 mm
Cathode blue sensitivity	13 μA/lmF
Supply voltage for anode blue sensitivity = 1,5 A/lmF	1250 V
Anode dark current at anode blue sensitivity = 1,5 A/lmF	0,5 nA
Pulse amplitude resolution (^{57}Co)	≈ 10%
Mean anode sensitivity deviation (30 days)	≈ 1%

To be read in conjunction with *General Operational Recommendations Photomultiplier Tubes.*

GENERAL CHARACTERISTICS

Window

		notes
Material	lime glass	
Shape	plano-plano	
Refractive index at 400 nm	1,54	

Photocathode

		notes
Photocathode		2
Semi-transparent, head-on		
Material	Sb K Cs	
Useful diameter	> 70 mm	
Spectral sensitivity characteristic (Fig. 2)	type D	
Maximum spectral sensitivity	400 ± 30 nm	
Luminous sensitivity	≈ 78 μA/lm	3
Blue sensitivity	typ. 13 μA/lmF > 10 μA/lmF	1
Spectral sensitivity at 400 nm	≈ 105 mA/W	4

Multiplier system

Number of stages	10
Dynode structure	venetian blind
Dynode material	CuBe
Capacitances	
anode to final dynode	≈ 7 pF
anode to all	≈ 8,5 pF

Magnetic field

When the photocathode is uniformly illuminated the anode current is halved (at V_{ht} = 1500 V) at a magnetic flux density of 0,3 mT perpendicular to the tube axis.

A mu-metal shield extending more than 15 mm beyond the cathode is recommended for magnetic screening.

RECOMMENDED CIRCUIT

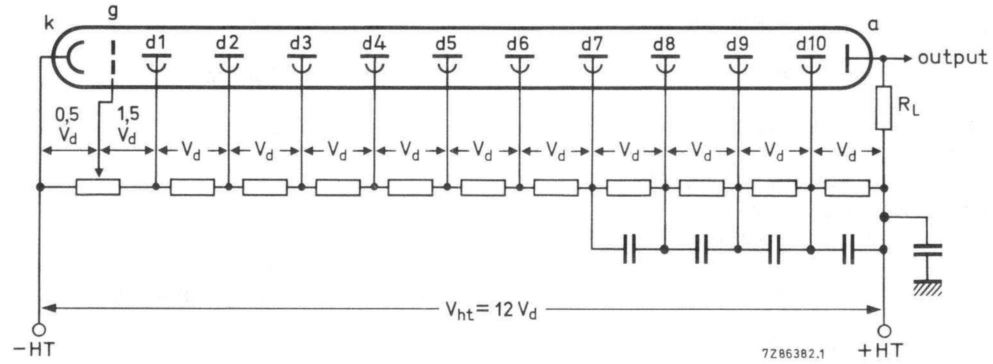

Fig. 1 Voltage divider A. Typical values of capacitors: 10 nF; k = cathode; g = accelerating electrode; dn = dynode no.; a = anode; R_L = load resistor.

Note

For optimum pulse-amplitude resolution, the accelerating-electrode potential should be between the cathode and first dynode potentials. If the tube is used in a socket wired for an XP2030UB or XP2030 with the accelerating electrode connected to the first dynode, the pulse amplitude resolution for ^{57}Co is about 10,2%.

TYPICAL CHARACTERISTICS

With voltage divider A (Fig. 1)		notes 5
Supply voltage for an anode blue sensitivity of 1,5 A/lmF (Fig. 5)	< 1450 V typ. 1250 V	1
Anode radiant sensitivity at 400 nm and V_{ht} = 1250 V	≈ 12 kA/W	
Gain at V_{ht} = 1250 V	≈ $1,2 \times 10^5$	
Anode dark current at an anode blue sensitivity of 1,5 A/lmF (Fig. 5)	< 5 nA typ. 0,5 nA	1, 6
Pulse amplitude resolution for ^{137}Cs at an anode blue sensitivity of 1,5 A/lmF	≈ 7%	1, 7
Pulse amplitude resolution for ^{57}Co at an anode blue sensitivity of 1,5 A/lmF	≈ 10%	1, 7
Pulse amplitude resolution for ^{55}Fe at an anode blue sensitivity of 7,5 A/lmF	≈ 38%	1, 8
Peak to valley ratio for ^{55}Fe at an anode blue sensitivity of 7,5 A/lmF	≈ 40	1, 8
Mean anode sensitivity deviation		9
long term (16 h)	≈ 0,5%	
long term (30 days)	≈ 1%	
after change of count rate	≈ 0,8%	
versus temperature between 20 and 60 °C at 450 nm	≈ 0,1% per K	
Anode pulse rise time at V_{ht} = 1500 V	≈ 11 ns	10
Anode pulse duration at half height at V_{ht} = 1500 V	≈ 22 ns	10
Signal transit time at V_{ht} = 1500 V	≈ 54 ns	10
Anode current linear within 2% at V_{ht} = 1500 V	up to ≈ 10 mA	11

LIMITING VALUES (absolute maximum rating system)

Supply voltage	max. 2000 V	12
Continuous anode current	max. 0,2 mA	13
Voltage between first dynode and photocathode	max. 500 V min. 150 V	14
Voltage between accelerating electrode and photocathode	max. 500 V	
Voltage between consecutive dynodes	max. 300 V	
Voltage between anode and final dynode	max. 300 V	15
Ambient temperature range		
operational (for short periods)	max. + 80 °C min. −30 °C	16
continuous operation and storage	max. + 50 °C min. −30 °C	

Notes

1. Blue sensitivity, expressed in μA/lmF, is measured with a tungsten filament lamp with a colour temperature of 2856 ± 5K. Light is transmitted through a blue filter (Corning CS No. 5-58, polished to half stock thickness).
2. The bialkaline photocathode has a significant resistance which increases rapidly with reducing temperature. It is therefore recommended that it should not be exposed to light of too great an intensity; the cathode current should be limited, for example, to 1 nA at room temperature or 0,1 nA at –30 °C. If too high a photocurrent is passed, the cathode can no longer be considered an equipotential surface, and the focusing of electrons onto the first dynode will be affected, resulting in departure from linearity.
3. Luminous sensitivity is measured with a tungsten filament lamp with a colour temperature of 2856 ± 5K.
4. Spectral sensitivity is measured with a tungsten filament lamp with a colour temperature of 2856 ± 5K. Light is transmitted through an interferential filter. Spectral sensitivity at 400 nm, expressed in A/W, can be estimated by multiplying the blue sensitivity, expressed in A/lmF, by $7{,}7 \times 10^3$ for this type of tube.
5. Wherever possible, the power supply should be arranged so that the cathode is earthed and the anode is at + HT, however, it is sometimes necessary to supply the tube with the anode earthed and the cathode at –HT. Under these circumstances, erratic noise and dark current generally increased and unstable, particularly after application of voltage. The glass envelope of the tube should be supported only by insulators with an insulation resistance of $> 10^{15}$ ohm.
6. Dark current is measured at ambient temperature, after the tube has been in darkness for approx. 1 min. Lower values can be obtained after a longer stabilization period in darkness (approx. 30 min).
7. Pulse amplitude resolution for ^{137}Cs and ^{57}Co is measured with an NaI(Tl) cylindrical scintillator (Quartz et Silice serial no. 4186 or equivalent) with a diameter of 76 mm and a height of 76 mm (3" x 3"). The count rate used is $\approx 10^4$ c/s.
8. Pulse amplitude resolution for ^{55}Fe is measured with an NaI(Tl) cylindrical scintillator with a diameter of 25 mm and a height of 1 mm provided with a beryllium window. The count rate used is $\approx 2 \times 10^3$ c/s.
9. The mean anode sensitivity deviation is measured by coupling an NaI(Tl) scintillator to the window of the tube. Long term (16 h) deviation is measured by placing a ^{137}Cs source at a distance from the scintillator such that the count rate is $\approx 10^4$ c/s corresponding to an average anode current of ≈ 300 nA. Anode sensitivity deviation after change of count rate is measured with a ^{137}Cs source at a distance of the scintillator such that the count rate can be changed from 10^4 c/s to 10^3 c/s corresponding to an average anode current of ≈ 1 μA and $\approx 0{,}1$ μA respectively. Both tests are carried out according to ANSI–N42–9–1972 of IEEE recommendations.
10. Measured with a pulsed light source, with a pulse duration (FWHM) of < 1 ns; the cathode being completely illuminated. The rise time is determined between 10% and 90% of the amplitude of the anode pulse. The signal transit time is measured between the instant at which the illuminating pulse at the cathode becomes maximum, and the instant at which the anode pulse attains its maximum. Rise time, pulse duration and transit time vary as a function of high tension supply voltage V_{ht}, approximately as $V_{ht}^{-1/2}$.
11. To obtain a peak pulse current greater than that obtainable with divider A, it is necessary to increase the inter-dynode voltage of the stages progressively. Other dividers can be conceived to achieve other compromises. It is generally recommended that the voltage difference between one stage and the next is less than a factor of 2.

Notes (continued)

12. Total HT supply voltage, or the voltage at which the tube has an anode blue sensitivity of 40 A/lmF, whichever is lower.
13. A value of < 10 μA is recommended for applications requiring good stability.
14. Minimum value to obtain good collection in the input optics.
15. When calculating the anode voltage the voltage drop across the load resistor should be taken into account.
16. For type XP2412B this range of temperatures is limited principally by stresses in the sealing layer of the base to the glass bulb. Where low temperature operation is contemplated, the supplier should be consulted.

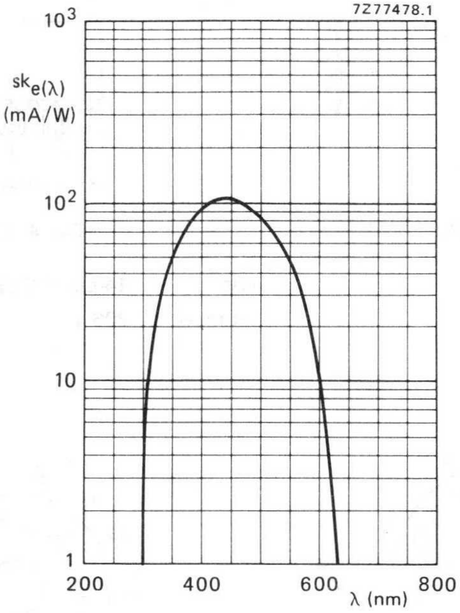

Fig. 2 Spectral sensitivity characteristic.

MECHANICAL DATA

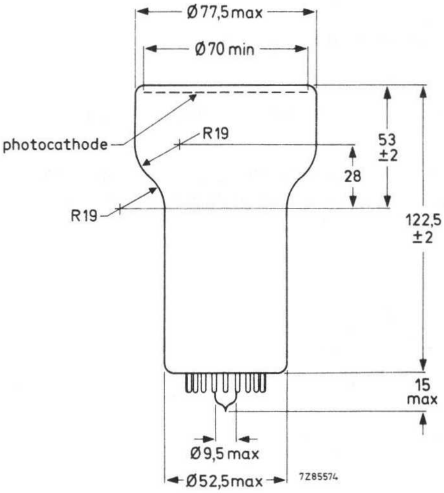

Fig. 3 XP2412.

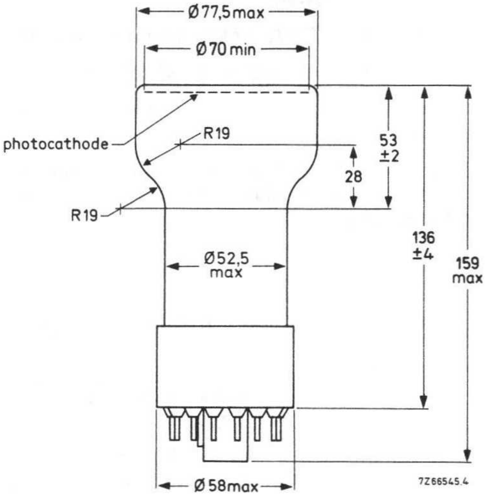

Fig. 4 XP2412B.

Base	19-pin all-glass
Net mass	163 g

Base	14-pin IEC 67-1-16a (JEDEC B14-38)
Net mass	206 g

PIN CONNECTIONS

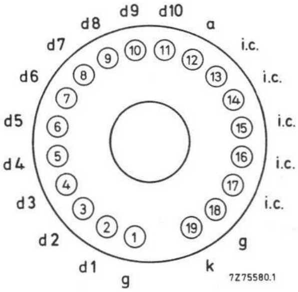

XP2412

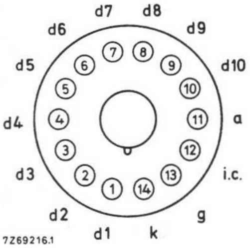

XP2412B

ACCESSORIES

Socket

for XP2412	type FE2019
for XP2412B	type FE1014

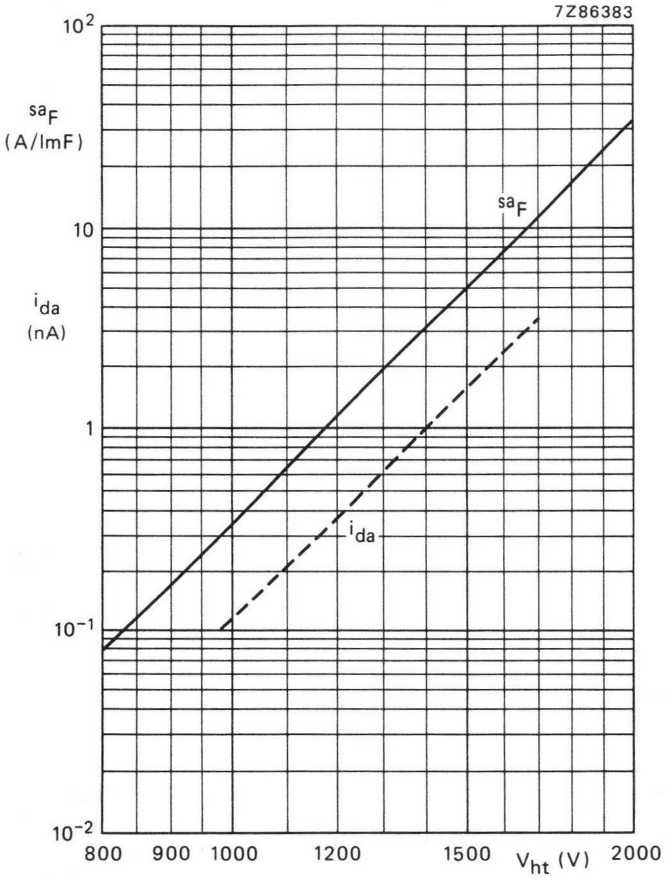

Fig. 5 Anode blue sensitivity sa_F, and anode dark current i_{da} as a function of supply voltage V_{ht}.

i_{da} is given as a dotted line to indicate its principle behaviour only.

10-STAGE VENETIAN BLIND PHOTOMULTIPLIER TUBES

- 56 mm useful diameter head-on type
- Flat window
- Semi-transparent bi-alkaline type D photocathode
- High cathode sensitivity; excellent collection from the entire cathode
- Very good pulse amplitude resolution
- Very low dark current
- Very good stability
- For nuclear medicine applications, e.g. gamma cameras

QUICK REFERENCE DATA

Spectral sensitivity characteristic	type D
Useful diameter of the photocathode	$>$ 56 mm
Cathode blue sensitivity	12 μA/lmF
Supply voltage for anode blue sensitivity = 1,5 A/lmF	1250 V
Anode dark current at anode blue sensitivity = 1,5 A/lmF	0,5 nA
Pulse amplitude resolution (^{57} Co)	≈ 9,2%
Mean anode sensitivity deviation (30 days)	≈ 1%

To be read in conjunction with *General Operational Recommendations Photomultiplier Tubes.*

GENERAL CHARACTERISTICS

		notes
Window		
Material	lime glass	
Shape	plano-plano	
Refractive index at 400 nm	1,54	
Photocathode		2
Semi-transparent, head-on		
Material	Sb K Cs	
Useful diameter	$>$ 56 mm	
Spectral sensitivity characteristic (Fig. 2)	type D	
Maximum spectral sensitivity	400 ± 30 nm	
Luminous sensitivity	≈ 72 μA/lm	3
Blue sensitivity	typ. 12 μA/lmF $>$ 9,0 μA/lmF	1
Spectral sensitivity at 400 nm	≈ 90 mA/W	4

Multiplier system

Number of stages	10
Dynode structure	venetian blind
Dynode material	CuBe
Capacitances	
anode to final dynode	≈ 7 pF
anode to all	≈ 8,5 pF

Magnetic field

When the photocathode is uniformly illuminated the anode current is halved (at V_{ht} = 1500 V) at a magnetic flux density of 0,35 mT perpendicular to the tube axis.

A mu-metal shield extending more than 15 mm beyond the cathode is recommended for magnetic screening.

RECOMMENDED CIRCUIT

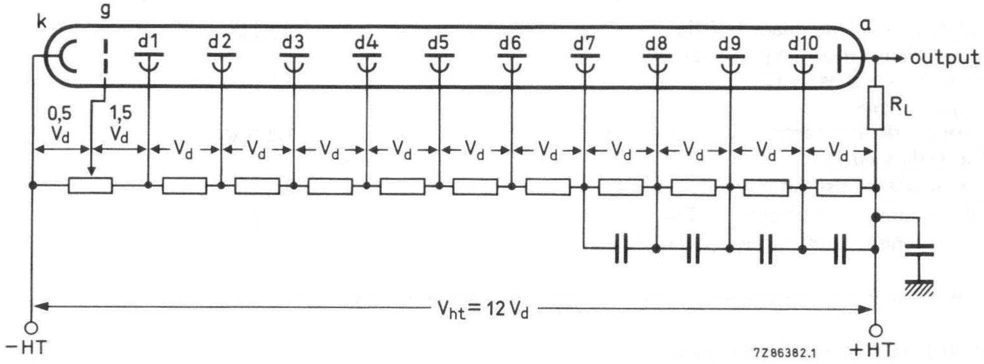

Fig. 1 Voltage divider A. Typical values of capacitors: 10 nF; k = cathode; g = accelerating electrode; dn = dynode no.; a = anode; R_L = load resistor.

Note

For optimum pulse amplitude resolution, the accelerating-electrode potential should be between the cathode and first dynode potentials. If the accelerating electrode is connected to the first dynode, the pulse amplitude resolution for ^{57} Co is about 9,4%.

TYPICAL CHARACTERISTICS

		notes
With voltage divider A (Fig. 1)		5
Supply voltage for an anode blue sensitivity of 1,5 A/lmF (Fig.5)	< 1450 V typ. 1250 V	1
Anode radiant sensitivity at 400 nm and V_{ht} = 1250 V	≈ 12 kA/W	
Gain at V_{ht} = 1250 V	≈ $1,3 \times 10^5$	
Anode dark current at an anode blue sensitivity of 1,5 A/lmF (Fig. 5)	< 5 nA typ. 0,5 nA	1, 6
Pulse amplitude resolution for ^{137}Cs at an anode blue sensitivity of 1,5 A/lmF	≈ 7%	1, 7
Pulse amplitude resolution for ^{57}Co at an anode blue sensitivity of 1,5 A/lmF	≈ 9,2%	1, 7
Pulse amplitude resolution for ^{55}Fe at an anode blue sensitivity of 7,5 A/lmF	≈ 38%	1, 8
Peak to valley ratio for ^{55}Fe at an anode blue sensitivity of 7,5 A/lmF	≈ 40	1,8
Mean anode sensitivity deviation		9
long term (16 h)	≈ 0,5%	
long term (30 days)	≈ 1%	
after change of count rate	≈ 0,8%	
versus temperature between 20 and 60 °C at 450 nm	≈ 0,1% per K	
Anode pulse rise time at V_{ht} = 1500 V	≈ 10 ns	10
Anode pulse duration at half height at V_{ht} = 1500 V	≈ 20 ns	10
Signal transit time at V_{ht} = 1500 V	≈ 46 ns	10
Anode current linear within 2% at V_{ht} = 1500 V	up to ≈ 10 mA	11

LIMITING VALUES (absolute maximum rating system)

Supply voltage	max. 2000 V	12
Continuous anode current	max. 0,2 mA	13
Voltage between first dynode and photocathode	max. 500 V min. 150 V	14
Voltage between accelerating electrode and photocathode	max. 500 V	
Voltage between consecutive dynodes	max. 300 V	
Voltage between anode and final dynode	max. 300 V	15
Ambient temperature range		
operational (for short periods)	max. +80 °C min. −30 °C	16
continuous operation and storage	max. +50 °C min. −30 °C	

Notes

1. Blue sensitivity, expressed in µA/lmF, is measured with a tungsten filament lamp with a colour temperature of 2856 ± 5K. Light is transmitted through a blue filter (Corning CS no. 5-58, polished to half stock thickness).
2. The bialkaline photocathode has a significant resistance which increases rapidly with reducing temperature. It is therefore recommended that it should not be exposed to light of too great an intensity; the cathode current should be limited, for example, to 1 nA at room temperature or 0,1 nA at −30 °C. If too high a photocurrent is passed, the cathode can no longer be considered an equipotential surface, and the focusing of electrons onto the first dynode will be affected, resulting in departure from linearity.
3. Luminous sensitivity is measured with a tungsten filament lamp with a colour temperature of 2856 ± 5K.
4. Spectral sensitivity is measured with a tungsten filament lamp with a colour temperature of 2856 ± 5K. Light is transmitted through an interferential filter. Spectral sensitivity at 400 nm, expressed in A/W, can be estimated by multiplying the blue sensitivity, expressed in A/lmF, by $7{,}7 \times 10^3$ for this type of tube.
5. Wherever possible, the power supply should be arranged so that the cathode is earthed and the anode is at +HT, however, it is sometimes necessary to supply the tube with the anode earthed and the cathode at −HT. Under these circumstances, erratic noise and dark current are generally increased and unstable, particularly after application of voltage. The glass envelope of the tube should be supported only by insulators with an insulation resistance of $> 10^{15}$ ohm.
6. Dark current is measured at ambient temperature, after the tube has been in darkness for approx. 1 min. Lower values can be obtained after a longer stabilization period in darkness (approx. 30 min).
7. Pulse amplitude resolution for ^{137}Cs and ^{57}Co is measured with an NaI(Tl) cylindrical scintillator (Quartz et Silice serial no. 4856 or equivalent) with a diameter of 50 mm and a height of 50 mm (2″ x 2″). The count rate used is $\approx 10^4$ c/s.
8. Pulse amplitude resolution for ^{55}Fe is measured with an NaI(Tl) cylindrical scintillator with a diameter of 25 mm and a height of 1 mm provided with a beryllium window. The count rate used is $\approx 2 \times 10^3$ c/s.
9. The mean anode sensitivity deviation is measured by coupling an NaI(Tl) scintillator to the window of the tube. Long term (16 h) deviation is measured by placing a ^{137}Cs source at a distance from the scintillator such that the count rate is $\approx 10^4$ c/s corresponding to an average anode current of ≈ 300 nA. Anode sensitivity deviation after change of count rate is measured with a ^{137}Cs source at a distance of the scintillator such that the count rate can be changed from 10^4 c/s to 10^3 c/s corresponding to an average anode current of ≈ 1 µA and ≈ 0,1 µA respectively. Both tests are carried out according to ANSI–N42–9–1972 of IEEE recommendations.
10. Measured with a pulsed light source, with a pulse duration (FWHM) of < 1 ns; the cathode being completely illuminated. The rise time is determined between 10% and 90% of the amplitude of the anode pulse. The signal transit time is measured between the instant at which the illuminating pulse at the cathode becomes maximum, and the instant at which the anode pulse attains its maximum. Rise time, pulse duration and transit time vary as a function of high tension supply voltage V_{ht}, approximately as $V_{ht}^{-1/2}$.
11. To obtain a peak pulse current greater than that obtainable with divider A, it is necessary to increase the inter-dynode voltage of the stages progressively. Other dividers can be conceived to achieve other compromises. It is generally recommended that the voltage difference between one stage and the next is less than a factor of 2.

Notes (continued)

12. Total HT supply voltage, or the voltage at which the tube has an anode blue sensitivity of 40 A/lmF, whichever is lower.
13. A value of < 10 μA is recommended for applications requiring good stability.
14. Minimum value to obtain good collection in the input optics.
15. When calculating the anode voltage the voltage drop across the load resistor should be taken into account.
16. For type XP2432B this range of temperatures is limited principally by stresses in the sealing layer of the base to the glass bulb. Where low temperature operation is contemplated, the supplier should be consulted.

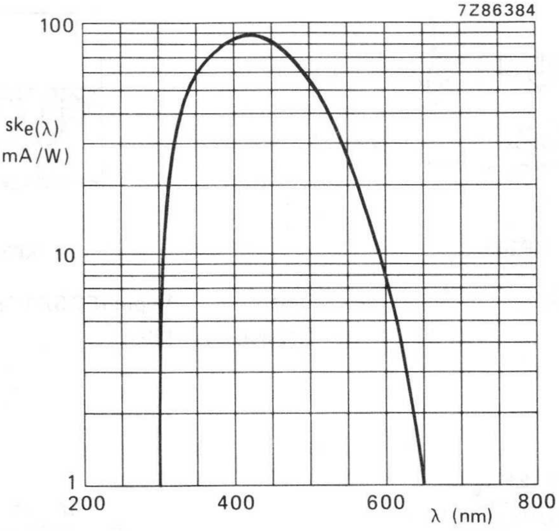

Fig. 2 Spectral sensitivity characteristic.

MECHANICAL DATA

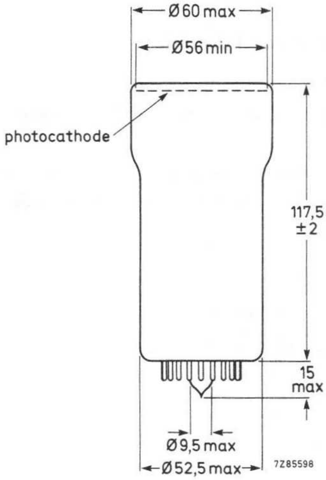

Fig. 3 XP2432.

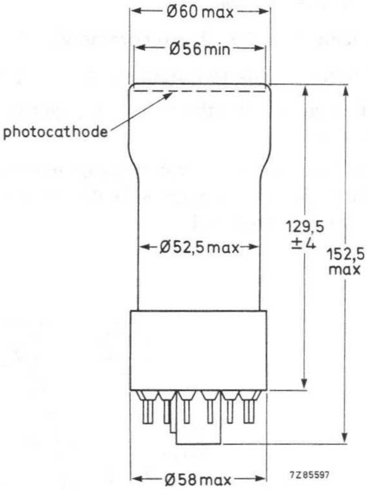

Fig. 4 XP2432B.

Base	19-pin all-glass
Net mass	146 g

Base	14-pin IEC 67-1-16a (JEDEC B14-38)
Net mass	189 g

PIN CONNECTIONS

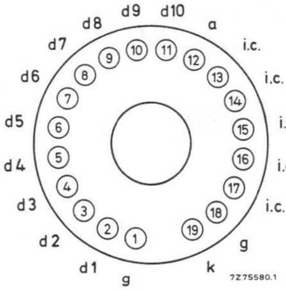

XP2432

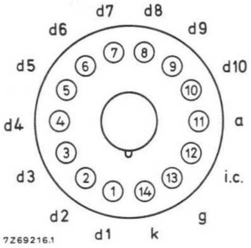

XP2432B

ACCESSORIES

Socket

for XP2432	type FE2019
for XP2432B	type FE1014

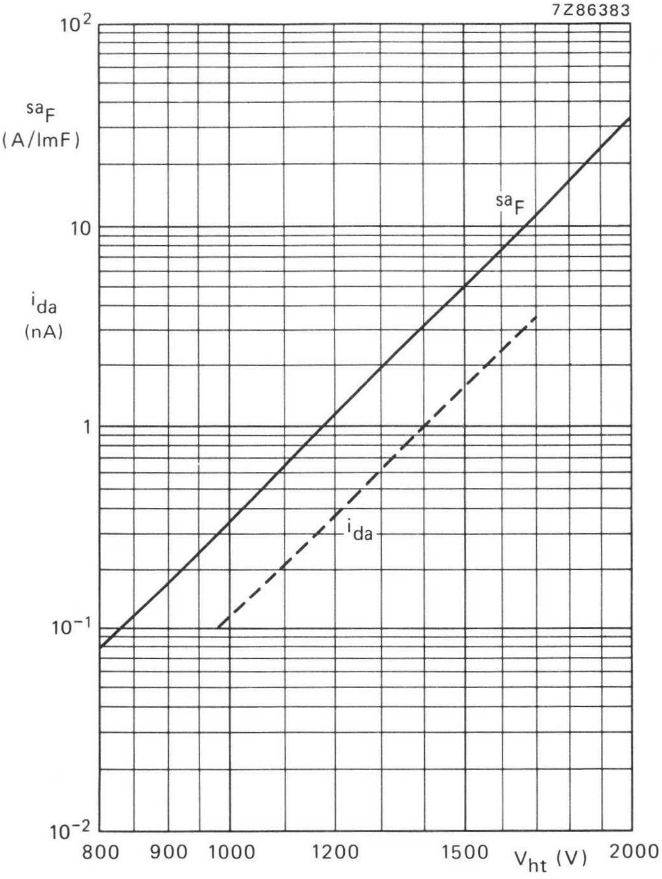

Fig. 5 Anode spectral sensitivity sa_F, and anode dark current i_{da} as a function of supply voltage V_{ht}.

i_{da} is given as a dotted line to indicate its principle behaviour only.

8-STAGE PHOTOMULTIPLIER TUBE

- 23 mm useful diameter head-on type
- Flat window
- Semi-transparent bi-alkaline type D photocathode
- Very good time characteristics
- For e.g. high-energy physics, scintillation counting.

QUICK REFERENCE DATA

Spectral sensitivity characteristic	type D
Useful diameter of the photocathode	> 23 mm
Cathode blue sensitivity	10,8 μA/lmF
Supply voltage for anode blue sensitivity = 1 A/lmF	1100 V
Anode pulse rise time (with voltage divider B)	≈ 1,8 ns
Linearity	
with voltage divider A (Fig. 2)	≈ 20 mA
with voltage divider B (Fig. 3)	≈ 80 mA

To be read in conjunction with *General Operational Recommendations Photomultiplier Tubes.*

GENERAL CHARACTERISTICS

		notes
Window		
Material	lime glass	
Shape	plano-concave	
Refractive index at 400 mm	1,54	
Photocathode		2
Semi-transparent, head-on		
Material	Sb K Cs	
Useful diameter	> 23 mm	
Spectral sensitivity characteristic (Fig. 5)	type D	
Maximum spectral sensitivity	400 ± 30 nm	
Luminous sensitivity	≈ 65 μA/lm	3
Blue sensitivity	typ. 10,8 μA/lmF > 8,0 μA/lmF	1
Spectral sensitivity at 400 nm	≈ 75 mA/W	4

Multiplier system

Number of stages	8
Dynode structure	linear focused
Dynode material	Cu Be
Capacitances	
anode to final dynode	≈ 2 pF
anode to all	≈ 4 pF

Magnetic field

When the photocathode is illuminated uniformly the anode current is halved (at V_{ht} = 1200 V, voltage divider A) at a magnetic flux density of:

0,4 mT perpendicular to axis a (Fig. 1);
0,2 mT parallel to axis a.

It is recommended that the tube be screened from magnetic fields by a mu-metal shield protruding > 15 mm beyond the photocathode.

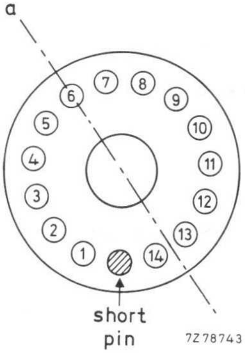

Fig. 1 Axis with respect to base pins (bottom view).

RECOMMENDED CIRCUITS

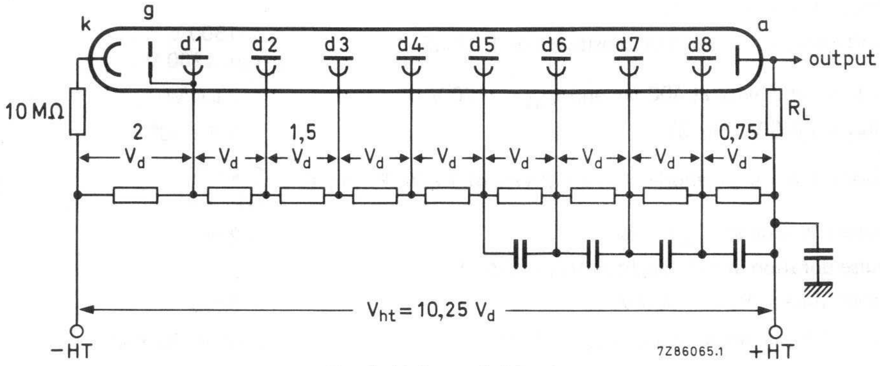

Fig. 2 Voltage divider A.

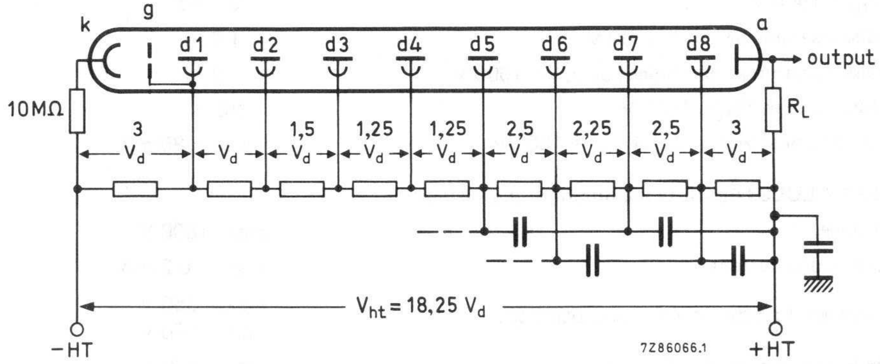

Fig. 3 Voltage divider B.

Typical value of capacitors: 1 nF

k = cathode
g = accelerating electrode
dn = dynode no.
a = anode
R_L = load resistor

The cathode resistor of 10 MΩ limits the current should there be unintentional contact between an outer coating and earth when the anode is earthed.

TYPICAL CHARACTERISTICS

		notes
With voltage divider A (Fig. 2)		5
Supply voltage for an anode blue sensitivity of 1 A/lmF	< 1500 V typ. 1100 V	1
Anode radiant sensitivity at 400 nm and V_{ht} = 1100 V	≈ 7 kA/W	
Gain at V_{ht} = 1100 V (Fig. 6)	≈ $9{,}3 \times 10^4$	
Anode dark current at an anode blue sensitivity of 1 A/lmF (Fig. 6)	< 5 nA typ. 1 nA	6,7
Anode pulse rise time at V_{ht} = 1300 V	≈ 2 ns	8
Anode pulse duration at half height at V_{ht} = 1300 V	≈ 3 ns	8
Signal transit time at V_{ht} = 1300 V	≈ 20 ns	8
Anode current linear within 2% at V_{ht} = 1300 V	up to ≈ 20 mA	
With voltage divider B (Fig. 3)		5
Gain at V_{ht} = 1500 V (Fig. 6)	≈ 2×10^5	
Anode pulse rise time at V_{ht} = 1500 V	≈ 1,8 ns	8
Anode pulse duration at half height at V_{ht} = 1500 V	≈ 2,8 ns	8
Signal transit time at V_{ht} = 1500 V	≈ 20 ns	8
Anode current linear within 2% at V_{ht} = 1500 V	up to ≈ 80 mA	

LIMITING VALUES (Absolute maximum rating system)

Supply voltage	max. 1800 V	
Continuous anode current	max. 0,2 mA	
Voltage between first dynode and photocathode	max. 350 V min. 150 V	9
Voltage between consecutive dynodes	max. 250 V	
Voltage between anode and final dynode	max. 300 V min. 30 V	10
Ambient temperature range		
operational (for short periods of time)	max. +80 °C min. −30 °C	
continuous operation and storage	max. +50 °C min. −30 °C	

Notes

1. Blue sensitivity, expressed in μA/lmF, is measured with a tungsten filament lamp with a colour temperature of 2856 ± 5K. Light is transmitted through a blue filter (Corning CS no. 5-58, polished to half stock thickness).
2. The bi-alkaline photocathode has a significant resistance which increases rapidly with reducing temperature. It is therefore recommended that it should not be exposed to light of too great an intensity; the cathode current should be limited, for example, to 1 nA at room temperature or 0,1 nA at −30 °C. If too high a photocurrent is passed, the cathode can no longer be considered an equipotential surface, and the focusing of electrons onto the first dynode will be affected, resulting in departure from linearity. In applications with short pulse times the photocathode is able to deliver pulses containing 10^6 to 10^7 photoelectrons without disturbance.
3. Luminous sensitivity is measured with a tungsten filament lamp with a colour temperature of 2856 ± 5K.
4. Spectral sensitivity is measured with a tungsten filament lamp with a colour temperature of 2856 ± 5K. Light is transmitted through an interferential filter. Spectral sensitivity at 400 nm, expressed in A/W, can be estimated by multiplying the blue sensitivity, expressed in A/lmF, by 7×10^3 for this type of tube.
5. To obtain a peak pulse current greater than that obtainable with divider A, it is necessary to increase the inter-dynode voltage of the stages progressively. Divider circuit B is an example of a "progressive" divider, giving a compromise between gain, speed, and linearity. Other dividers can be conceived to achieve other compromises after consulting the supplier.
6. Wherever possible, the power supply should be arranged so that the cathode is earthed and the anode is at + HT, however, it is sometimes necessary to supply the tube with the anode earthed and the cathode at −HT. Under these circumstances, erratic noise and dark current are generally increased and unstable, particularly immediately after application of voltage. The envelope of the tube should be supported only by insulators with an insulation resistance of $> 10^{15}\ \Omega$.
7. Dark current is measured at ambient temperature, after the tube has been in darkness for approx. 1 min. Lower values can be obtained after a longer stabilization period in darkness (approx. 30 min).
8. Measured with a pulsed light source, with a pulse duration (FWHM) of < 1 ns; the cathode being completely illuminated. The rise time is determined between 10% and 90% of the amplitude of the anode pulse. The signal transit time is measured between the instant at which the illuminating pulse at the cathode becomes maximum, and the instant at which the anode pulse attains its maximum. Rise time, pulse duration and transit time vary as a function of high tension supply voltage V_{ht}, approximately as $V_{ht}^{-1/2}$.
9. Minimum value to obtain good collection in the input optics.
10. When calculating the anode voltage the voltage drop across the load resistor should be taken into account.

MECHANICAL DATA

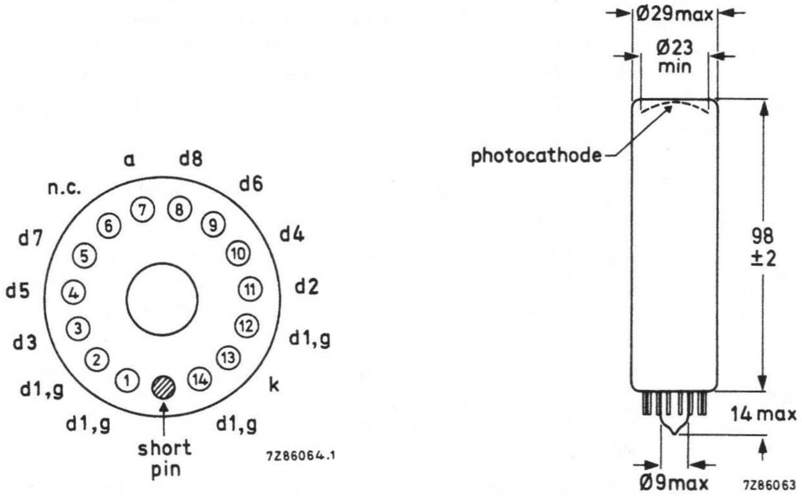

Fig. 4.

Base	14-pin all-glass
Net mass	34 g

ACCESSORIES

Socket	type FE1114

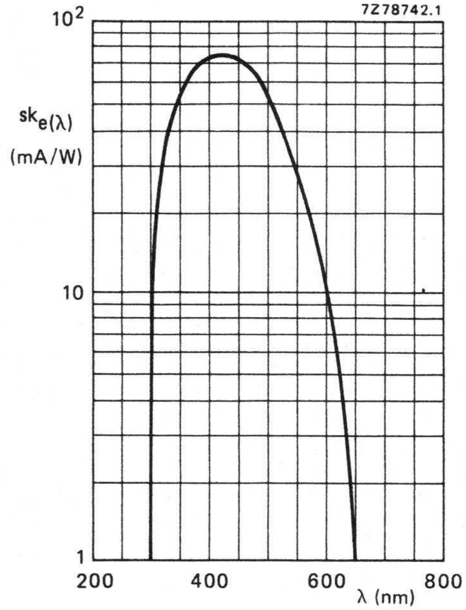

Fig. 5 Spectral sensitivity characteristic.

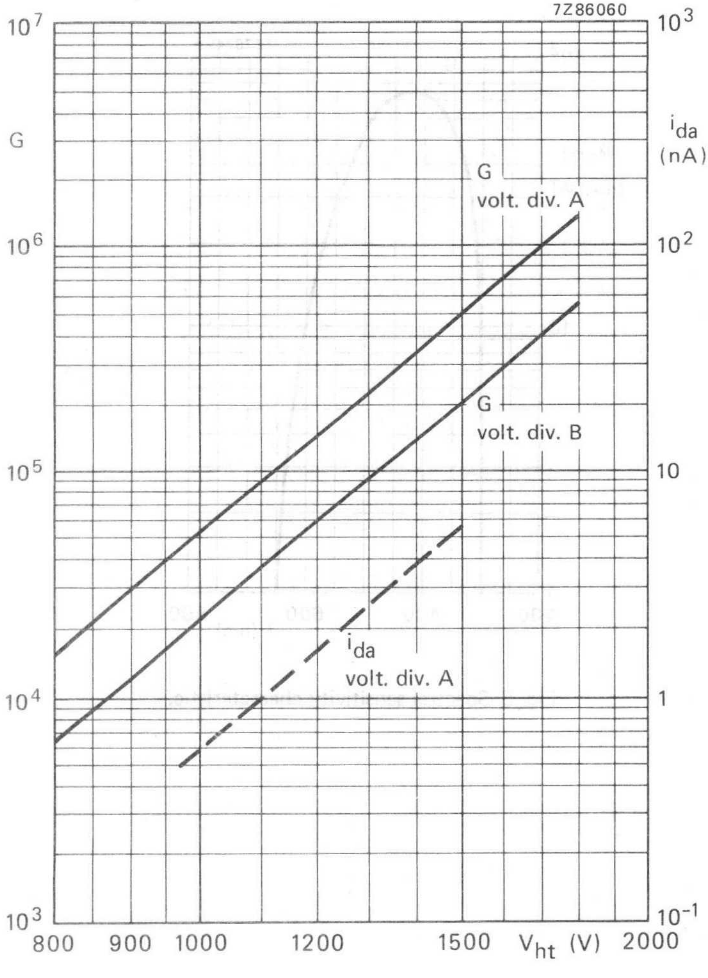

Fig. 6 Gain G and anode dark current i_{da} as a function of the supply voltage V_{ht}.

i_{da} is given as a dotted line to indicate its principle behaviour only.

8-STAGE PHOTOMULTIPLIER TUBE

- 23 mm useful diameter head-on type
- Flat window
- Semi-transparent tri-alkaline S20 (type T) photocathode
- Very good time characteristics
- For industrial applications, e.g. laser reading

QUICK REFERENCE DATA

Spectral sensitivity characteristic	S20 (type T)
Useful diameter of the photocathode	> 23 mm
Spectral sensitivity of the cathode at 700 nm	20 mA/W
Supply voltage for anode luminous sensitivity = 6 A/lm	1120 V
Anode pulse rise time (with voltage divider B)	≈ 1,8 ns
Linearity, with voltage divider B (Fig. 3)	≈ 80 mA

To be read in conjunction with *General Operational Recommendations Photomultiplier Tubes.*

GENERAL CHARACTERISTICS

Window

		notes
Material	borosilicate	
Shape	plano-concave	
Refractive index at 550 nm	1,48	

Photocathode

Semi-transparent, head-on

		notes
Material	SbNaKCs	
Useful diameter	> 23 mm	
Spectral sensitivity characteristic (Fig. 4)	S20 (type T)	
Maximum spectral sensitivity	420 ± 30 nm	
Luminous sensitivity	≈ 200 μA/lm	1
Spectral sensitivity at 700 nm	typ. 20 mA/W > 10 mA/W	2
Spectral sensitivity at 630 nm	≈ 40 mA/W	2

Multiplier system

Number of stages	8
Dynode structure	linear focused
Dynode material	CuBe
Capacitances	
anode to final dynode	≈ 2 pF
anode to all	≈ 4 pF

Magnetic field

When the photocathode is uniformly illuminated the anode current is halved (at V_{ht} = 1200 V, voltage divider A) at a magnetic flux density of:

0,4 mT perpendicular to axis a (Fig. 1);
0,2 mT parallel with axis a.

It is recommended that the tube be screened from magnetic fields by a mu-metal shield protruding > 15 mm beyond the photocathode.

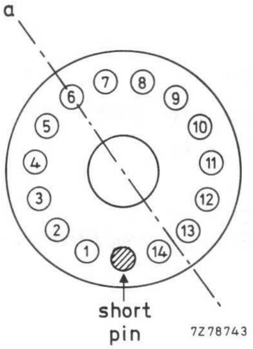

Fig. 1 Axis with respect to base pins (bottom view).

RECOMMENDED CIRCUITS

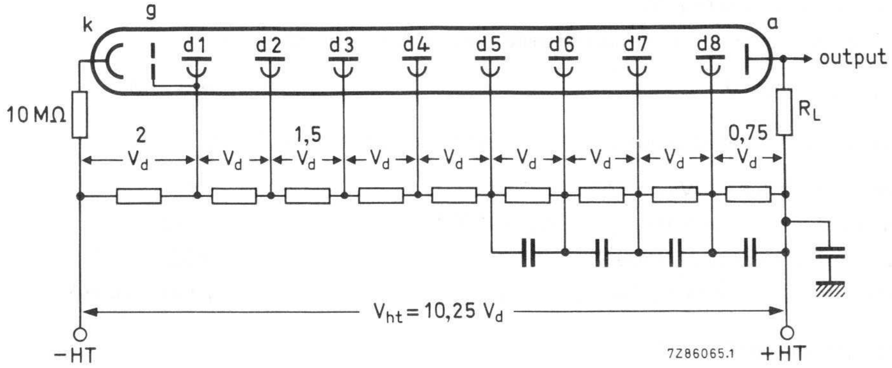

Fig. 2 Voltage divider A.

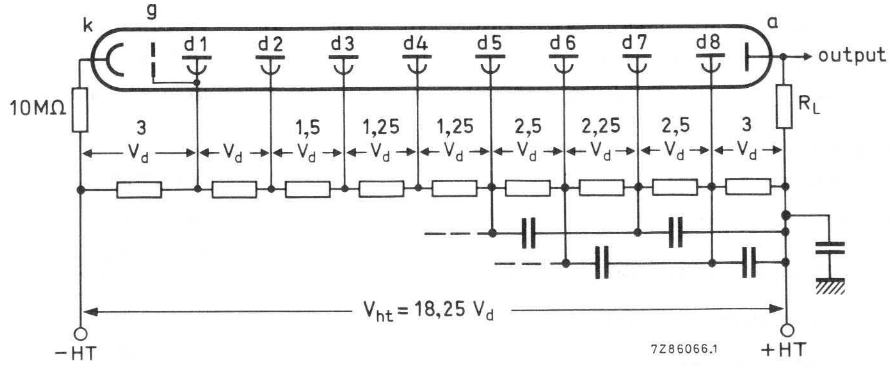

Fig. 3 Voltage divider B.

DEVELOPMENT DATA

k = cathode
g = accelerating electrode
dn = dynode no.
a = anode
R_L = load resistor

Typical value of capacitors: 1 nF

TYPICAL CHARACTERISTICS

		notes
With voltage divider A (Fig. 2)		3
Supply voltage for an anode luminous sensitivity of 6 A/lm (Fig. 6)	$<$ 1300 V typ. 1120 V	1
Gain at V_{ht} = 1120 V	$\approx 3 \times 10^4$	
Anode dark current at an anode luminous sensitivity of 6 A/lm (Fig. 6)	$<$ 5 nA typ. 1 nA	4,5
Anode pulse rise time at V_{ht} = 1300 V	≈ 2 ns	6
Anode pulse duration at half height at V_{ht} = 1300 V	≈ 3 ns	6
Signal transit time at V_{ht} = 1300 V	≈ 20 ns	6
Anode current linear within 2% at V_{ht} = 1300 V	up to ≈ 20 mA	
With voltage divider B (Fig. 3)		3
Anode luminous sensitivity at V_{ht} = 1500 V (Fig. 6)	≈ 7 A/lm	
Anode pulse rise time at V_{ht} = 1500 V	≈ 1,8 ns	6
Anode pulse duration at half height at V_{ht} = 1500 V	≈ 2,8 ns	6
Signal transit time at V_{ht} = 1500 V	≈ 20 ns	6
Anode current linear within 2% at V_{ht} = 1500 V	up to ≈ 80 mA	

LIMITING VALUES (Absolute maximum rating system)

Supply voltage	max. 1800 V	7
Continuous anode current	max. 0,2 mA	8
Voltage between first dynode and photocathode	max. 350 V min. 150 V	9
Voltage between consecutive dynodes	max. 250 V	
Voltage between anode and final dynode	max. 300 V min. 30 V	10
Ambient temperature range		
operational (for short periods of time)	max. + 80 °C min. –30 °C	
continuous operation and storage	max. + 50 °C min. –30 °C	

NOTES

1. Luminous sensitivity is measured with a tungsten filament lamp with a colour temperature of 2856 ± 5K.
2. Spectral sensitivity is measured with a tungsten filament lamp with a colour temperature of 2856 ± 5K. Light is transmitted through an interferential filter.
3. To obtain a peak pulse current greater than that obtainable with divider A, it is necessary to increase the inter-dynode voltage of the stages progressively. Divider circuit B is an example of a "progressive" divider, giving a compromise between gain, speed, and linearity. Other dividers can be conceived to achieve other compromises after consulting the supplier.
4. Wherever possible, the power supply should be arranged so that the cathode is earthed and the anode is at +HT, however, it is sometimes necessary to supply the tube with the anode earthed and the cathode at −HT. Under these circumstances, erratic noise and dark current are generally increased and unstable, particularly immediately after application of voltage. The envelope of the tube should be supported only by insulators with an insulation resistance of $> 10^{15}\,\Omega$.
5. Dark current is measured at ambient temperature, after the tube has been in darkness for approx. 1 min. Lower values can be obtained after a longer stabilization period in darkness (approx. 30 min).
6. Measured with a pulsed light source, with a pulse duration (FWHM) of < 1 ns; the cathode being completely illuminated. The rise time is determined between 10% and 90% of the amplitude of the anode pulse. The signal transit time is measured between the instant at which the illuminating pulse at the cathode becomes maximum, and the instant at which the anode pulse attains its maximum. Rise time, pulse duration and transit time vary as a function of high tension supply voltage V_{ht}, approximately as $V_{ht}^{-1/2}$.
7. Total HT supply voltage or the voltage at which the tube has an anode luminous sensitivity of ≈ 120 A/lm (test certificate voltage multiplied by 1,65), whichever is lower.
8. A value of $< 10\ \mu A$ is recommended for applications requiring good stability.
9. Minimum value to obtain good collection in the input optics.
10. When calculating the anode voltage the voltage drop across the load resistor should be taken into account.

DEVELOPMENT DATA

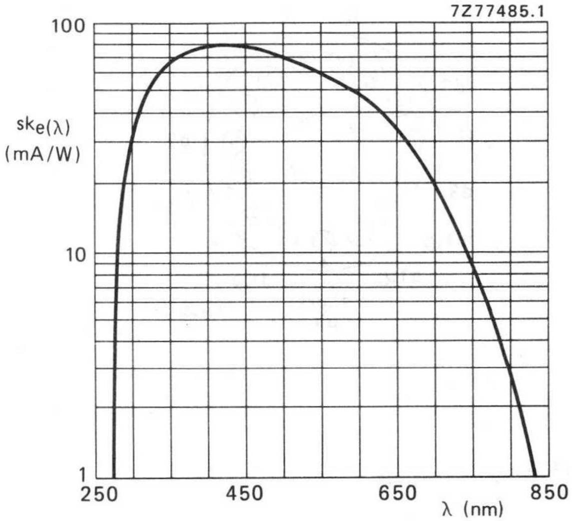

Fig. 4 Spectral sensitivity characteristic

MECHANICAL DATA

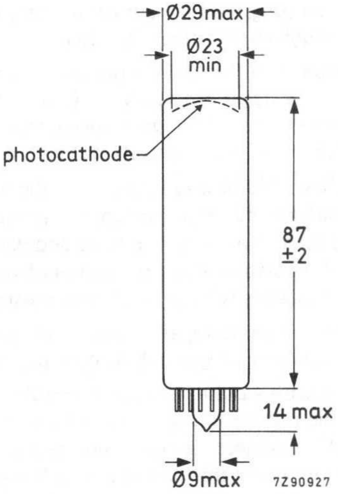

Fig. 5

Base	14-pin all-glass
Net mass	32 g

PIN CONNECTIONS

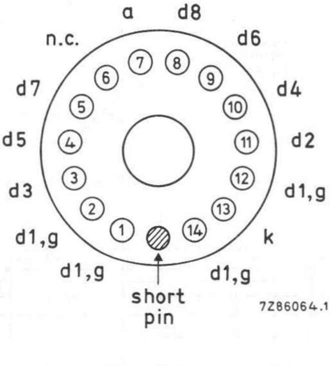

ACCESSORIES

Socket	type FE1114

DEVELOPMENT DATA

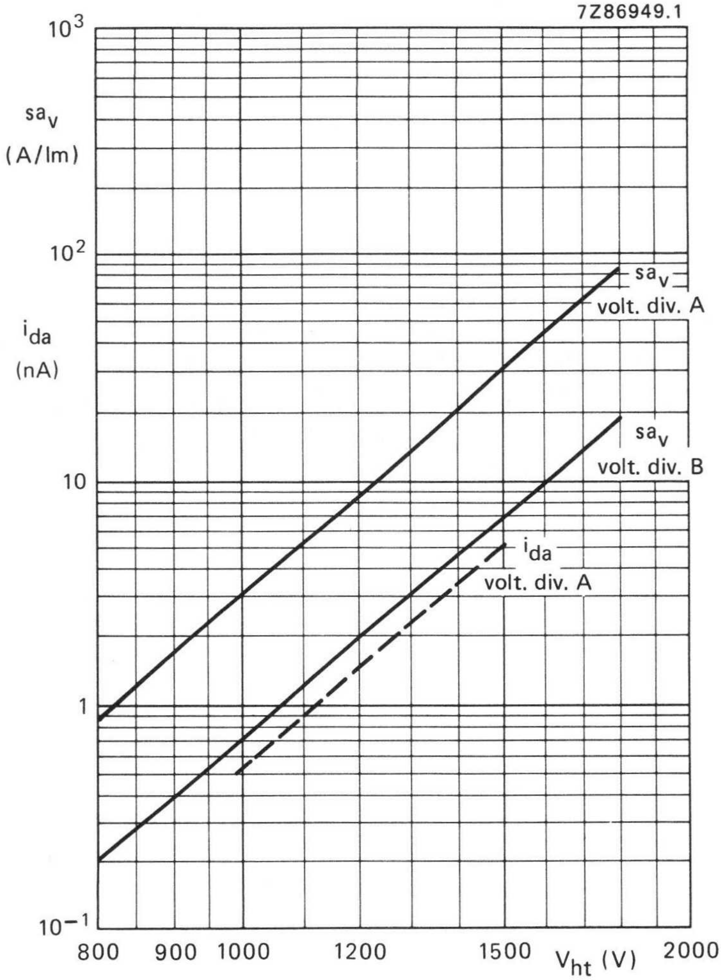

Fig. 6 Anode luminous sensitivity sa_v and anode dark current i_{da} as a function of the supply voltage V_{ht}; i_{da} is given as a dotted line to indicate its principle behaviour only.

10-STAGE PHOTOMULTIPLIER TUBE

- 23 mm useful diameter head-on type
- Flat window
- Semi-transparent bi-alkaline type D photocathode
- For high-energy physics and scintillation counting where good time characteristics are required, e.g. coincidence measurements and Cerenkov light detection
- Pin-compatible with XP1980

QUICK REFERENCE DATA

Spectral sensitivity characteristic	type D
Useful diameter of the photocathode	> 23 mm
Cathode blue sensitivity	10,8 μA/lmF
Supply voltage for anode blue sensitivity = 10 A/lmF	1300 V
Pulse amplitude resolution for ^{137}Cs	≈ 7,7%
Anode pulse rise time (with voltage divider B)	≈ 1,9 ns
Linearity	
with voltage divider A (Fig. 2)	≈ 30 mA
with voltage divider B (Fig. 3)	≈ 80 mA

To be read in conjunction with *General Operational Recommendations Photomultiplier Tubes.*

GENERAL CHARACTERISTICS

		notes
Window		
Material	lime glass	
Shape	plano-concave	
Refractive index at 400 nm	1,54	
Photocathode		2
Semi-transparent, head-on		
Material	Sb K Cs	
Useful diameter	> 23 mm	
Spectral sensitivity characteristic (Fig. 5)	type D	
Wavelength for maximum spectral sensitivity	400 ± 30 nm	
Luminous sensitivity	≈ 65 μA/lm	3
Blue sensitivity	typ. 10,8 μA/lmF > 8,0 μA/lmF	1
Spectral sensitivity at 400 nm	≈ 75 mA/W	4

Multiplier system	
Number of stages	10
Dynode structure	linear focused
Dynode material	Cu Be
Capacitances	
anode to final dynode	≈ 2 pF
anode to all	≈ 4 pF

Magnetic field

When the photocathode is illuminated uniformly the anode current is halved (at V_{ht} = 1200 V, voltage divider A) at a magnetic flux density of:

0,4 mT perpendicular to axis a (see Fig. 1);
0,2 mT parallel to axis a.

It is recommended that the tube be screened from magnetic fields by a mu-metal shield protruding > 15 mm beyond the photocathode.

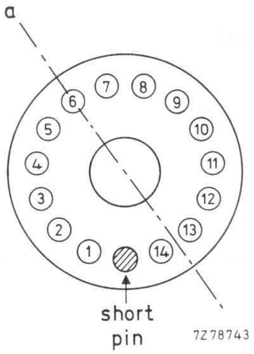

Fig. 1 Axis a with respect to base pins (bottom view).

RECOMMENDED CIRCUITS

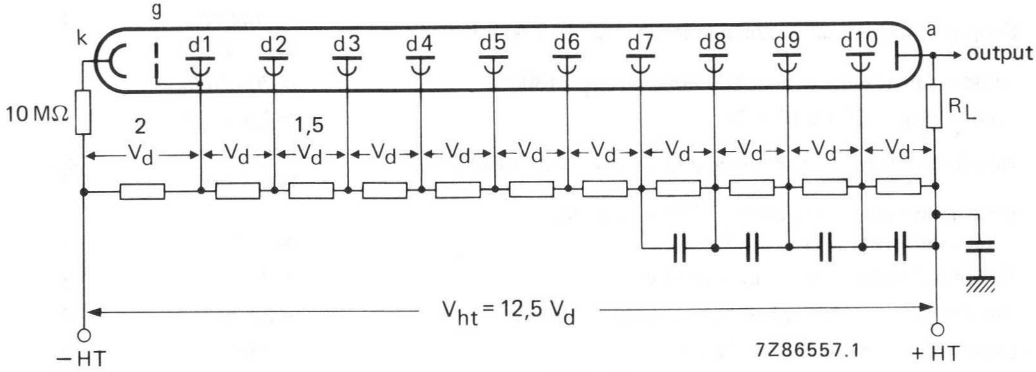

Fig. 2 Voltage divider A.

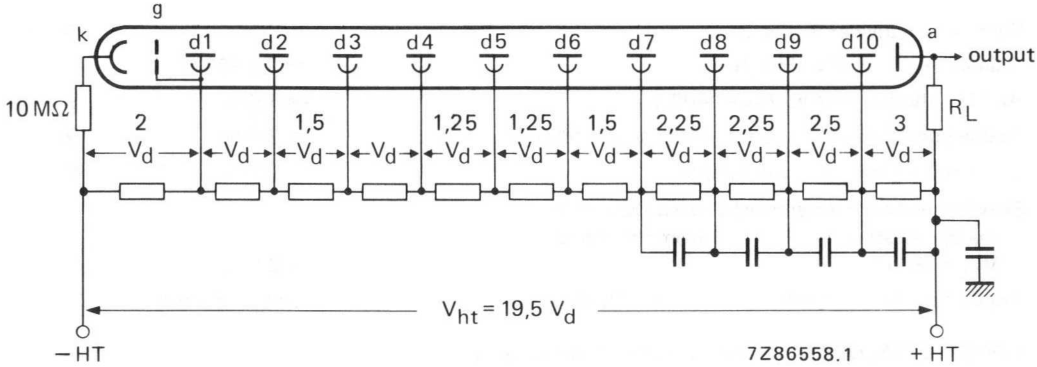

Fig. 3 Voltage divider B.

k = cathode
g = accelerating electrode
dn = dynode no.
a = anode
R$_L$ = load resistor

Typical value of capacitors: 1 nF

The cathode resistor of 10 MΩ limits the current should there be unintentional contact between an outer coating and earth when the anode is earthed.

TYPICAL CHARACTERISTICS

		notes
With voltage divider A (Fig. 2)		5
Supply voltage for an anode blue sensitivity of 10 A/lmF	$<$ 1600 V typ. 1300 V	1
Anode radiant sensitivity at 400 nm and V_{ht} = 1300 V	≈ 70 kA/W	
Gain at V_{ht} = 1300 V (Fig. 7)	≈ $0,9 \times 10^6$	
Anode dark current at an anode blue sensitivity of 10 A/lmF	$<$ 20 nA typ. 1 nA	6,7
Pulse amplitude resolution for ^{137}Cs at an anode blue sensitivity of 10 A/lmF	≈ 7,7%	8
Anode pulse rise time at V_{ht} = 1500 V	≈ 2,1 ns	9
Anode pulse duration at half height at V_{ht} = 1500 V	≈ 3,5 ns	9
Signal transit time at V_{ht} = 1500 V	≈ 23 ns	9
Anode current-linear within 2% at V_{ht} = 1500 V	up to ≈ 30 mA	
With voltage divider B (Fig. 3)		5
Gain at V_{ht} = 1800 V (Fig. 7)	≈ 3×10^6	
Anode pulse rise time at V_{ht} = 1800 V	≈ 1,9 ns	9
Anode pulse duration at half height at V_{ht} = 1800 V	≈ 3,0 ns	9
Signal transit time at V_{ht} = 1800 V	≈ 23 ns	9
Signal transit time difference between the centre of the photocathode and 11 mm from the centre at V_{ht} = 1800 V	≈ 0,8 ns	9
Anode current linear within 2% at V_{ht} = 1800 V	up to ≈ 80 mA	

LIMITING VALUES (Absolute maximum rating system)

Supply voltage	max. 1900 V	10
Continuous anode current	max. 0,2 mA	
Voltage between first dynode and photocathode	max. 350 V min. 150 V	11
Voltage between consecutive dynodes	max. 250 V	
Voltage between anode and final dynode	max. 300 V min. 30 V	12
Ambient temperature range operational (for short periods of time)	max. + 80 °C min. −30 °C	
continuous operation and storage	max. + 50 °C min. −30 °C	

Notes

1. Blue sensitivity, expressed in µA/lmF, is measured with a tungsten filament lamp with a colour temperature of 2856 ± 5K. Light is transmitted through a blue filter (Corning CS no. 5-58, polished to half stock thickness).
2. The bi-alkaline photocathode has a significant resistance which increases rapidly with reducing temperature. It is therefore recommended that it should not be exposed to light of too great an intensity; the cathode current should be limited, for example, to 1 nA at room temperature or 0,1 nA at –30 °C. If too high a photocurrent is passed, the cathode can no longer be considered an equipotential surface, and the focusing of electrons onto the first dynode will be affected, resulting in departure from linearity. In applications with short pulse times the photocathode is able to deliver pulses containing 10^6 to 10^7 photoelectrons without disturbance.
3. Luminous sensitivity is measured with a tungsten filament lamp with a colour temperature of 2856 ± 5K.
4. Spectral sensitivity is measured with a tungsten filament lamp with a colour temperature of 2856 ± 5K. Light is transmitted through an interferential filter. Spectral sensitivity at 400 nm, expressed in A/W, can be estimated by multiplying the blue sensitivity, expressed in A/lmF, by 7×10^3 for this type of tube.
5. To obtain a peak pulse current greater than that obtainable with divider A, it is necessary to increase the inter-dynode voltage of the stages progressively. Divider circuit B is an example of a "progressive" divider, giving a compromise between gain, speed, and linearity. Other dividers can be conceived to achieve other compromises after consulting the supplier.
6. Wherever possible, the power supply should be arranged so that the cathode is earthed and the anode is at + HT, however, it is sometimes necessary to supply the tube with the anode earthed and the cathode at –HT. Under these circumstances, erratic noise and dark current are generally increased and unstable, particularly immediately after application of voltage.
   The envelope of the tube should be supported only by insulators with an insulation resistance of $> 10^{15}\ \Omega$.
7. Dark current is measured at ambient temperature, after the tube has been in darkness for approx. 1 min. Lower values can be obtained after a longer stabilization period in darkness (approx. 30 min).
8. Pulse amplitude resolution for ^{137}Cs is measured with an NaI (Tl) cylindrical scintillator (Quartz et Silice serial no. 1162 or equivalent) with a diameter of 22 mm and a height of 6 mm. The count rate used is $\approx 10^4$ c/s.
9. Measured with a pulsed light source, with a pulse duration (FWHM) of < 1 ns; the cathode being completely illuminated. The rise time is determined between 10% and 90% of the amplitude of the anode pulse. The signal transit time is measured between the instant at which the illuminating pulse at the cathode becomes maximum, and the instant at which the anode pulse attains its maximum. Rise time, pulse duration and transit time vary as a function of high tension supply voltage V_{ht}, approximately as $V_{ht}^{-1/2}$.
10. Total HT supply voltage, or the voltage at which the tube has a gain of 2×10^7, whichever is lower.
11. Minimum value to obtain good collection in the input optics.
12. When calculating the anode voltage the voltage drop across the load resistor should be taken into account.

MECHANICAL DATA

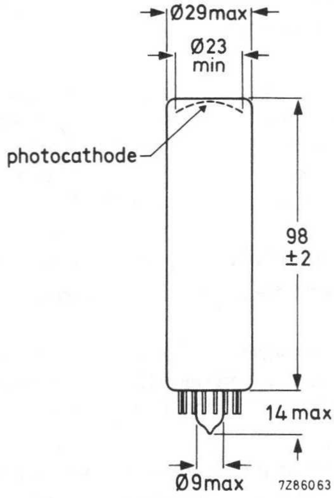

Fig. 4.

Base	14-pin all-glass
Net mass	34 g

PIN CONNECTIONS

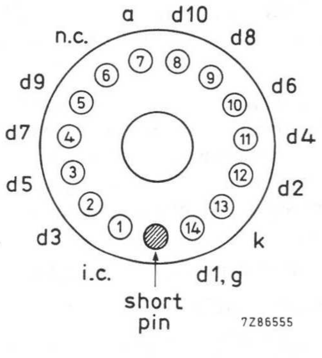

ACCESSORIES

Socket	type FE1114

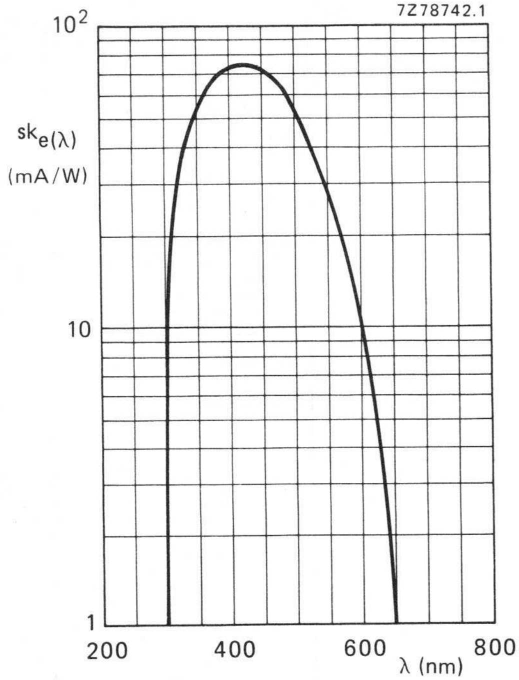

Fig. 5 Spectral sensitivity characteristic.

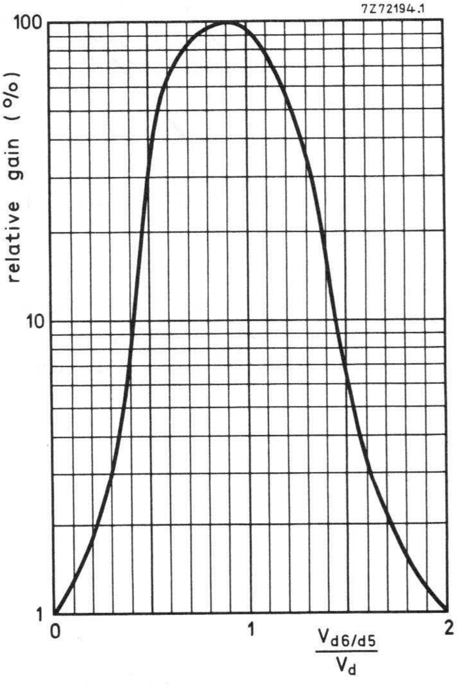

Fig. 6 Relative gain as a function of the voltage between d6 and d5, normalized to V_d; $V_{d7/d5}$ constant.

Note: Gain regulation by changing the voltage between d6 and d5 may cause a degradation of other parameters such as stability and linearity.

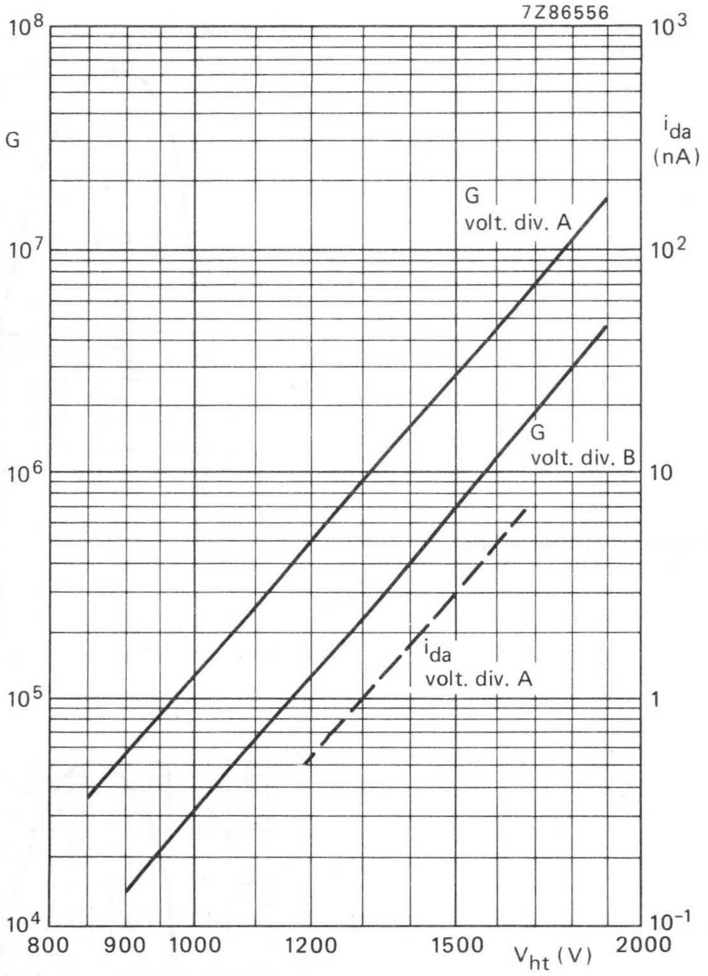

Fig. 7 Gain G and anode dark current i_{da} as a function of the supply voltage V_{ht}.

i_{da} is given as a dotted line to indicate its principle behaviour only.

11-STAGE PHOTOMULTIPLIER TUBE

- 23 mm useful diameter head-on type
- Flat window
- Semi-transparent bi-alkaline type D photocathode
- For high-energy physics and scintillation counting where good time characteristics are required, e.g. coincidence measurements and Cerenkov light detection.
- Pin-compatible with XP1982

QUICK REFERENCE DATA

Spectral sensitivity characteristic	type D
Useful diameter of the photocathode	> 23 mm
Cathode blue sensitivity	10,8 μA/lmF
Supply voltage for anode blue sensitivity = 30 A/lmF	1350 V
Pulse amplitude resolution for ^{137}Cs	≈ 7,7%
Anode pulse rise time (with voltage divider B)	≈ 1,9 ns
Linearity	
with voltage divider A (Fig. 2)	≈ 30 mA
with voltage divider B (Fig. 3)	≈ 80 mA

To be read in conjunction with *General Operational Recommendations Photomultiplier Tubes.*

GENERAL CHARACTERISTICS

		notes
Window		
Material	lime glass	
Shape	plano-concave	
Refractive index at 400 nm	1,54	
Photocathode		2
Semi-transparent, head-on		
Material	Sb K Cs	
Useful diameter	> 23 mm	
Spectral sensitivity characteristic (Fig. 5)	type D	
Maximum spectral sensitivity	400 ± 30 nm	
Luminous sensitivity	≈ 65 μA/lm	3
Blue sensitivity	typ. 10,8 μA/lmF > 8,0 μA/lmF	1
Spectral sensitivity at 400 nm	≈ 75 mA/W	4

Multiplier system

Number of stages	11
Dynode structure	linear focused
Dynode material	Cu Be
Capacitances	
anode to final dynode	≈ 2 pF
anode to all	≈ 4 pF

Magnetic field

When the photocathode is illuminated uniformly the anode current is halved (at V_{ht} = 1200 V, voltage divider A) at a magnetic flux density of:

0,4 mT perpendicular to axis a (see Fig. 1);
0,2 mT parallel to axis a.

It is recommended that the tube be screened from magnetic fields by a mu-metal shield protruding > 15 mm beyond the photocathode.

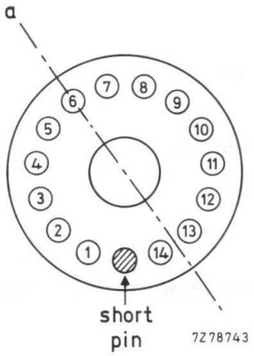

Fig. 1 Axis a with respect to base pins (bottom view).

RECOMMENDED CIRCUITS

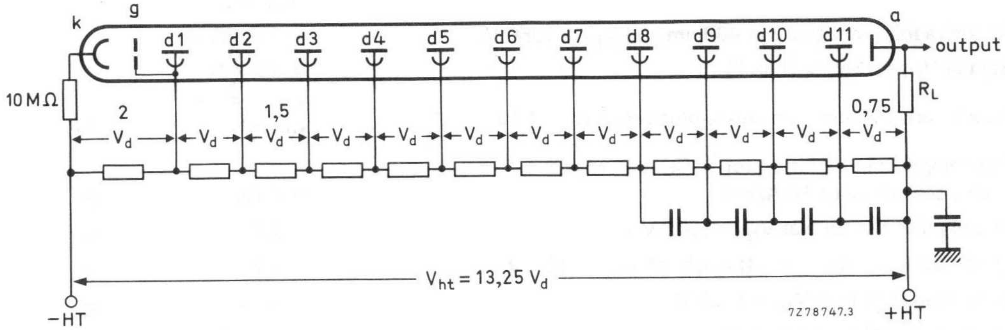

Fig. 2 Voltage divider A.

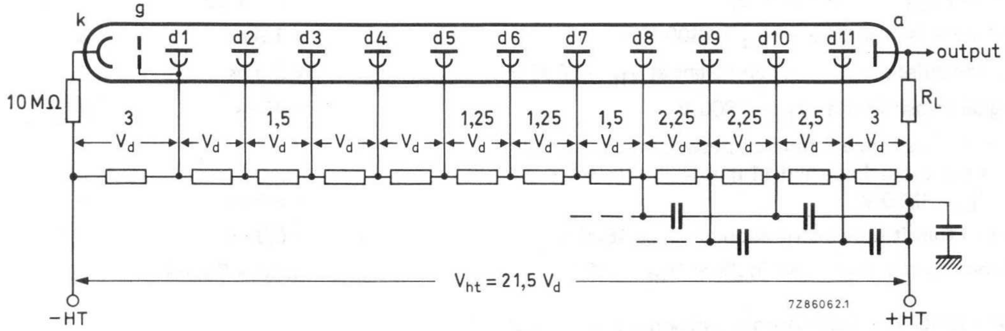

Fig. 3 Voltage divider B.

k = cathode
g = accelerating electrode
dn = dynode no.
a = anode
R_L = load resistor

Typical value of capacitors: 1 nF

The cathode resistor of 10 MΩ limits the current should there be unintentional contact between the coating and earth when the anode is earthed.

TYPICAL CHARACTERISTICS

			notes
With voltage divider A (Fig. 2)			5
Supply voltage for an anode blue sensitivity of 30 A/lmF		< 1650 V typ. 1350 V	1
Anode radiant sensitivity at 400 nm and V_{ht} = 1350 V		≈ 210 kA/W	
Gain at V_{ht} = 1350 V (Fig. 7)		≈ $2,7 \times 10^6$	
Anode dark current at an anode blue sensitivity of 30 A/lmF		< 25 nA typ. 2,5 nA	6,7
Pulse amplitude resolution for ^{137}Cs at an anode blue sensitivity of 10 A/lmF		≈ 7,7%	8
Anode pulse rise time at V_{ht} = 1500 V		≈ 2,2 ns	9
Anode pulse duration at half height at V_{ht} = 1500 V		≈ 3,7 ns	9
Signal transit time at V_{ht} = 1500 V		≈ 25 ns	9
Anode current linear within 2% at V_{ht} = 1500 V		up to ≈ 30 mA	
With voltage divider B (Fig. 3)			5
Gain at V_{ht} = 1800 V (Fig. 7)		≈ $6,5 \times 10^6$	
Anode pulse rise time at V_{ht} = 1800 V		≈ 1,9 ns	9
Anode pulse duration at half height at V_{ht} = 1800 V		≈ 3,3 ns	9
Signal transit time at V_{ht} = 1800 V		≈ 25 ns	9
Signal transit time difference between the centre of the photocathode and 11 mm from the centre at V_{ht} = 1800 V		≈ 0,8 ns	9
Signal transit time distribution at V_{ht} = 1800 V	σ	≈ 0,3 ns	9,10
Anode current linear within 2% at V_{ht} = 1800 V		up to ≈ 80 mA	

LIMITING VALUES (Absolute maximum rating system)

Supply voltage	max. 2000 V	11
Continuous anode current	max. 0,2 mA	
Voltage between first dynode and photocathode	max. 350 V min. 150 V	12
Voltage between consecutive dynodes	max. 250 V	
Voltage between anode and final dynode	max. 300 V min. 30 V	13
Ambient temperature range operational (for short periods of time)	max. + 80 °C min. −30 °C	
continuous operation and storage	max. + 50 °C min. −30 °C	

Notes

1. Blue sensitivity, expressed in μA/lmF, is measured with a tungsten filament lamp with a colour temperature of 2856 ± 5K. Light is transmitted through a blue filter (Corning CS no. 5-58, polished to half stock thickness).
2. The bi-alkaline photocathode has a significant resistance which increases rapidly with reducing temperature. It is therefore recommended that it should not be exposed to light of too great an intensity; the cathode current should be limited, for example, to 1 nA at room temperature or 0,1 nA at -30 °C. If too high a photocurrent is passed, the cathode can no longer be considered an equipotential surface, and the focusing of electrons onto the first dynode will be affected, resulting in departure from linearity. In applications with short pulse times the photocathode is able to deliver pulses containing 10^6 to 10^7 photoelectrons without disturbance.
3. Luminous sensitivity is measured with a tungsten filament lamp with a colour temperature of 2856 ± 5K.
4. Spectral sensitivity is measured with a tungsten filament lamp with a colour temperature of 2856 ± 5K. Light is transmitted through an interferential filter. Spectral sensitivity at 400 nm, expressed in A/W, can be estimated by multiplying the blue sensitivity, expressed in A/lmF, by 7×10^3 for this type of tube.
5. To obtain a peak pulse current greater than that obtainable with divider A, it is necessary to increase the inter-dynode voltage of the stages progressively. Divider circuit B is an example of a "progressive" divider, giving a compromise between gain, speed, and linearity. Other dividers can be conceived to achieve other compromises after consulting the supplier.
6. Wherever possible, the power supply should be arranged so that the cathode is earthed and the anode is at + HT, however, it is sometimes necessary to supply the tube with the anode earthed and the cathode at $-$HT. Under these circumstances, erratic noise and dark current are generally increased and unstable, particularly immediately after application of voltage. The tube is provided with a conductive coating connected to the cathode. It is recommended that, if a metal shield is used this be kept at photocathode potential. This implies safety precautions to protect the user. The envelope of the tube should be supported only by insulators with an insulation resistance of $> 10^{15}\ \Omega$.
7. Dark current is measured at ambient temperature, after the tube has been in darkness for approx. 1 min. Lower values can be obtained after a longer stabilization period in darkness (approx. 30 min).
8. Pulse amplitude resolution for ^{137}Cs is measured with an NaI (Tl) cylindrical scintillator (Quartz et Silice serial no. 1162 or equivalent) with a diameter of 22 mm and a height of 6 mm. The count rate used is $\approx 10^4$ c/s.
9. Measured with a pulsed light source, with a pulse duration (FWHM) of < 1 ns; the cathode being completely illuminated. The rise time is determined between 10% and 90% of the amplitude of the anode pulse. The signal transit time is measured between the instant at which the illuminating pulse at the cathode becomes maximum, and the instant at which the anode pulse attains its maximum. Rise time, pulse duration and transit time vary as a function of high tension supply voltage V_{ht}, approximately as $V_{ht}^{-1/2}$.
10. Transit time fluctuations of single electrons leaving the photocathode result in a transit time distribution at the anode. This distribution is characterized by its standard deviation σ.
11. Total HT supply voltage, or the voltage at which the tube has a gain of 3×10^7, whichever is lower.
12. Minimum value to obtain good collection in the input optics.
13. When calculating the anode voltage the voltage drop across the load resistor should be taken into account.

MECHANICAL DATA

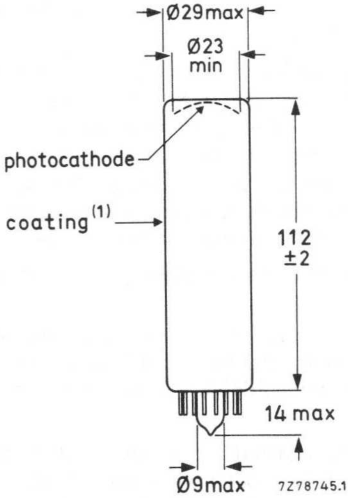

Fig. 4

Base	14-pin all-glass
Net mass	37 g

PIN CONNECTIONS

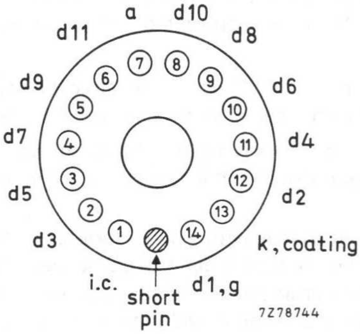

ACCESSORIES

Socket	type FE1114

---

(1) The envelope of the tube is covered with a conductive coating, connected to the cathode. On top of this a black paint is applied which is neither guaranteed to be light tight nor isolating. Care should be taken to avoid electrical shock.

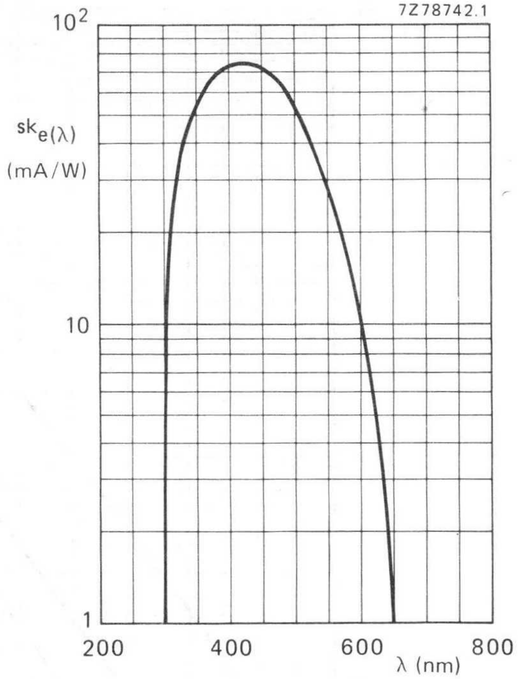

Fig. 5 Spectral sensitivity characteristic.

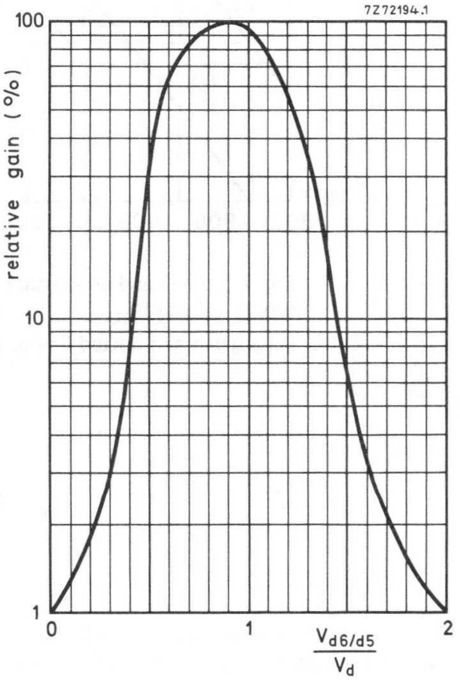

Fig. 6 Relative gain as a function of the voltage between d6 and d5, normalized to V_d; $V_{d7/d5}$ constant.

Note: Gain regulation by changing the voltage between d6 and d5 may cause a degradation of other parameters such as stability and linearity

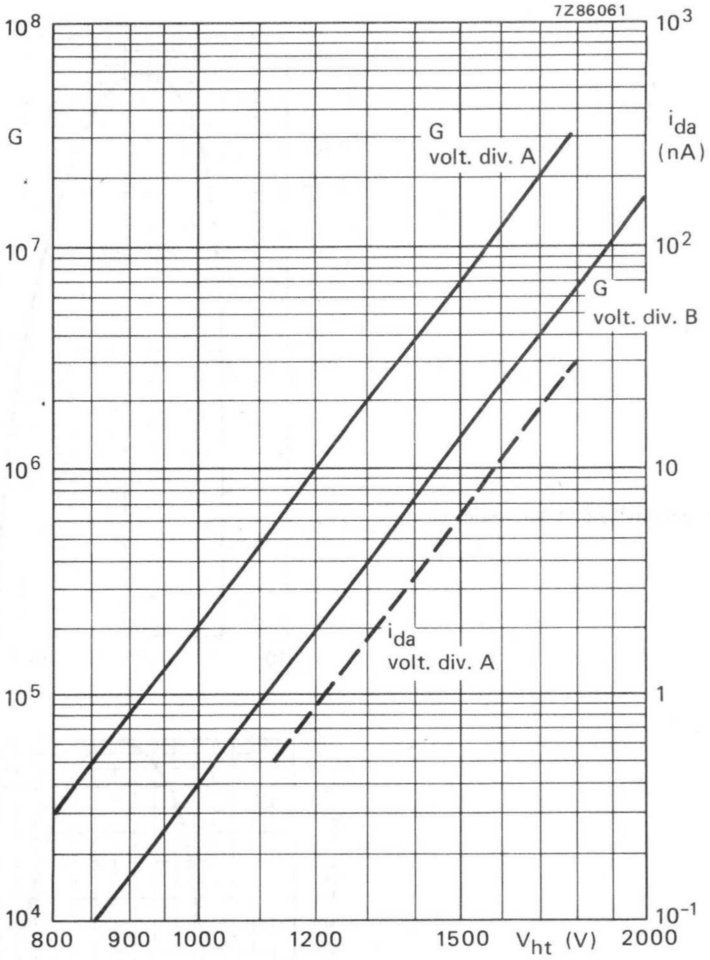

Fig. 7 Gain G and anode dark current i_{da} as a function of the supply voltage V_{ht}.

i_{da} is given as a dotted line to indicate its principle behaviour only.

XP3102 replaces XP2102
XP3102B replaces XP2102B

8-STAGE PHOTOMULTIPLIER TUBES

- 46 mm useful diameter head-on type
- Flat window
- Semi-transparent bi-alkaline type D photocathode
- High cathode sensitivity; excellent collection from the entire cathode
- Very good pulse amplitude resolution
- Very low dark current
- Very good stability
- For nuclear medicine applications, e.g. gamma cameras

QUICK REFERENCE DATA

Spectral sensitivity characteristic	type D
Useful diameter of the photocathode	> 46 mm
Cathode blue sensitivity	11,8 μA/lmF
Supply voltage for anode blue sensitivity = 1,5 A/lmF	950 V
Anode dark current at anode blue sensitivity = 1,5 A/lmF	0,5 nA
Pulse amplitude resolution (^{57}Co)	≈ 9,3%
Mean anode sensitivity deviation (30 days)	≈ 1%

To be read in conjunction with *General Operational Recommendations Photomultiplier Tubes.*

GENERAL CHARACTERISTICS

		notes
Window		
Material	lime glass	
Shape	plano-plano	
Refractive index at 400 nm	1,54	
Photocathode		2
Semi-transparent, head-on		
Material	Sb K Cs	
Useful diameter	> 46 mm	
Spectral sensitivity characteristic (Fig. 4)	type D	
Maximum spectral sensitivity	400 ± 30 nm	
Luminous sensitivity	≈ 70 μA/lmF	3
Blue sensitivity	typ. 11,8 μA/lmF > 9,0 μA/lmF	1
Spectral sensitivity at 400 nm	≈ 90 mA/W	4

Multiplier system

Number of stages	8
Dynode structure	linear focused
Dynode material	CuBe
Capacitances	
anode to final dynode	≈ 3 pF
anode to all	≈ 5 pF

Magnetic field, Fig. 1

When the photocathode is uniformly illuminated the anode current is halved (at V_{ht} = 1200 V)
- at a magnetic flux density of 0,15 mT perpendicular to the tube axis and to axis a;
- at a magnetic flux density of 0,3 mT perpendicular to the tube axis and parallel to axis a.

It is recommended that the tube be screened against the influence of magnetic fields by a mu-metal shield protruding > 15 mm beyond the photocathode.

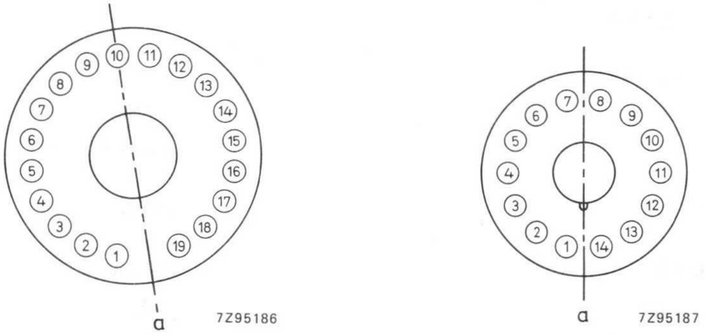

XP3102.

XP3102B.

Fig. 1 Axis "a" with respect to base pins (bottom view).

RECOMMENDED CIRCUITS

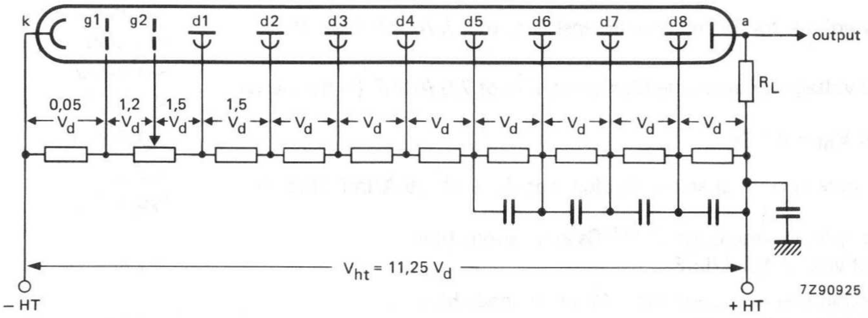

Fig. 2 Voltage divider A.

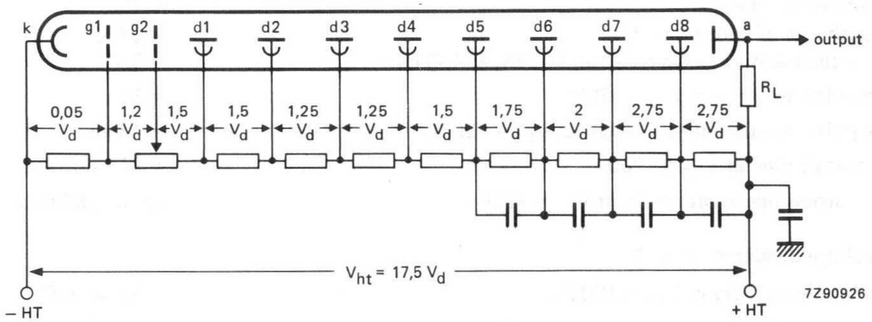

Fig. 3 Voltage divider B.

k = cathode
g1 = focusing electrode 1
g2 = accelerating electrode 2

dn = dynode no.
a = anode
R_L = load resistor

Typical value of capacitors: 10 nF

TYPICAL CHARACTERISTICS

		notes
With voltage divider A (Fig. 2)		5
Supply voltage for an anode blue sensitivity of 1,5 A/lmF (Fig. 7)	< 1250 V typ. 950 V	1
Supply voltage for an anode blue sensitivity of 7,5 A/lmF (≈ 60 kA/W)	≈ 1250 V < 1600 V	
Gain at V_{ht} = 950 V	≈ $1,3 \times 10^5$	
Anode dark current at an anode blue sensitivity of 1,5 A/lmF (Fig. 7)	< 5 nA typ. 0,5 nA	1, 6
Pulse amplitude resolution for ^{137}Cs at an anode blue sensitivity of 1,5 A/lmF	≈ 7%	1, 7
Pulse amplitude resolution for ^{57}Co at an anode blue sensitivity of 1,5 A/lmF	≈ 9,3%	1, 7
Pulse amplitude resolution for ^{55}Fe at an anode blue sensitivity of 7,5 A/lmF	≈ 37%	1, 8
Peak-to-valley ratio for ^{55}Fe at an anode blue sensitivity of 7,5 A/lmF	≈ 40	1, 8
Mean anode sensitivity deviation		9
long term (16 h)	≈ 0,5%	
long term (30 days)	≈ 1%	
after change of count rate	≈ 0,8%	
versus temperature between 20 and 60 °C at 450 nm	≈ 0,1% per K	
Anode pulse rise time at V_{ht} = 1200 V	≈ 3 ns	10
Anode pulse duration at half height at V_{ht} = 1200 V	≈ 4,5 ns	10
Signal transit time at V_{ht} = 1200 V	≈ 34 ns	10
Anode current linear within 2% at V_{ht} = 1200 V	up to ≈ 50 mA	
With voltage divider B (Fig. 3)		11
Anode blue sensitivity at V_{ht} = 1600 V	≈ 9,5 A/lmF	
Anode current linear within 2% at V_{ht} = 1600 V	up to ≈ 200 mA	

LIMITING VALUES (absolute maximum rating system)

Supply voltage	max. 1700 V	12
Continuous anode current	max. 0,2 mA	13
Voltage between first dynode and photocathode	max. 500 V min. 150 V	14
Voltage between focusing electrode g_1 and photocathode	max. 20 V	
Voltage between accelerating electrode g_2 and photocathode	max. 500 V	
Voltage between consecutive dynodes	max. 300 V	
Voltage between anode and final dynode	max. 300 V	15
Ambient temperature range		
operational (for short periods)	max. + 80 °C min. −30 °C	16
continuous operation and storage	max. + 50 °C min. −30 °C	

Notes

1. Blue sensitivity, expressed in μA/lmF, is measured with a tungsten filament lamp with a colour temperature of 2856 ± 5K. Light is transmitted through a blue filter (Corning CS no. 5-58, polished to half stock thickness).
2. The bialkaline photocathode has a significant resistance which increases rapidly with reducing temperature. It is therefore recommended that is should not be exposed to light of too great an intensity; the cathode current should be limited, for example, to 1 nA at room temperature or 0,1 nA at −30 °C. If too high a photocurrent is passed, the cathode can no longer be considered an equipotential surface, and the focusing of electrons onto the first dynode will be affected, resulting in departure from linearity.
3. Luminous sensitivity is measured with a tungsten filament lamp with a colour temperature of 2856 ± 5K.
4. Spectral sensitivity is measured with a tungsten filament lamp with a colour temperature of 2856 ± 5K. Light is transmitted through an interferential filter. Spectral sensitivity at 400 nm, expressed in A/W, can be estimated by multiplying the blue sensitivity, expressed in A/lmF, by $7{,}7 \times 10^3$ for this type of tube.
5. Wherever possible, the power supply should be arranged so that the cathode is earthed and the anode is at + HT, however, it is sometimes necessary to supply the tube with the anode earthed and the cathode at −HT. Under these circumstances, erratic noise and dark current are generally increased and unstable, particularly after application of voltage. The glass envelope of the tube should be supported only by insulators with an insulation resistance of $> 10^{15}\,\Omega$.
6. Dark current is measured at ambient temperature, after the tube has been in darkness for approx. 1 min. Lower values can be obtained after a longer stabilization period in darkness (approx. 30 min).
7. Pulse amplitude resolution for ^{137}Cs and ^{57}Co is measured with an NaI(Tl) cylindrical scintillator (Quartz et Silice serial no. 4856 or equivalent) with a diameter of 50 mm and a height of 50 mm (2" x 2"). The count rate used is $\approx 10^4$ c/s.
8. Pulse amplitude resolution for ^{55}Fe is measured with an NaI(Tl) cylindrical scintillator with a diameter of 25 mm and a height of 1 mm provided with a beryllium window. The count rate used is $\approx 2 \times 10^3$ c/s.
9. The mean anode sensitivity deviation is measured by coupling an NaI(Tl) scintillator to the window of the tube. Long term (16 h) deviation is measured by placing a ^{137}Cs source at a distance from the scintillator such that the count rate is $\approx 10^4$ c/s corresponding to an average anode current of $\approx$ 300 nA. Anode sensitivity deviation after change of count rate is measured with a ^{137}Cs source at a distance of the scintillator such that the count rate can be changed from 10^4 c/s to 10^3 c/s corresponding to an average anode current of $\approx 1\ \mu$A and $\approx 0{,}1\ \mu$A respectively. Both tests are carried out according to ANSI−N42−9−1972 of IEEE recommendations.
10. Measured with a pulsed light source, with a pulse duration (FWHM) of < 1 ns; the cathode being completely illuminated. The rise time is determined between 10% and 90% of the amplitude of the anode pulse. The signal transit time is measured between the instant at which the illuminating pulse at the cathode becomes maximum, and the instant at which the anode pulse attains its maximum. Rise time, pulse duration and transit time vary as a function of high tension supply voltage V_{ht}, approximately as $V_{ht}^{-1/2}$.
11. To obtain a peak pulse current greater than that obtainable with divider A, it is necessary to increase the inter-dynode voltage of the stages progressively. Other dividers can be conceived to achieve other compromises. It is generally recommended that the voltage difference between one stage and the next is less than a factor of 2.

Notes (continued)

12. Total HT supply voltage, or the voltage at which the tube has an anode blue sensitivity of 40 A/lmF, (voltage for 1,5 A/lmF given on the test certificate, multiplied by 1,7), whichever is lower. For applications where dark current is critical, a maximum sensitivity of 15 A/lmF is recommended (voltage for 1,5 A/lmF, multiplied by 1,45).
13. A value of $< 10\ \mu A$ is recommended for applications requiring good stability.
14. Minimum value to obtain good collection in the input optics.
15. When calculating the anode voltage the voltage drop across the load resistor should be taken into account.
16. For type XP3102B this range of temperature is limited principally by stresses in the sealing layer of the base to the glass bulb. Where low temperature operation is contemplated, the supplier should be consulted.

Interchangeability

The pinnings of these 8-stage linear focused photomultiplier tubes have been designed to facilitate exchangeability of old 10-stage venetian blind types.
The best performance will be obtained by using their own voltage divider but they can be directly mounted in sockets wired for the old types, involving only minor degraded characteristics.

When mounting XP3102 in sockets wired for XP2102 the cathode connection is secured by the electrode g1, connected to the cathode via the internal bialkali layer.
XP3102B can also be mounted in sockets wired for XP2202B but pin 13 (g2) has to be connected properly.

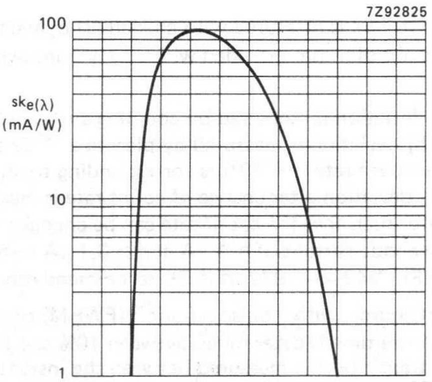

Fig. 4 Spectral sensitivity characteristic.

MECHANICAL DATA

Dimensions in mm

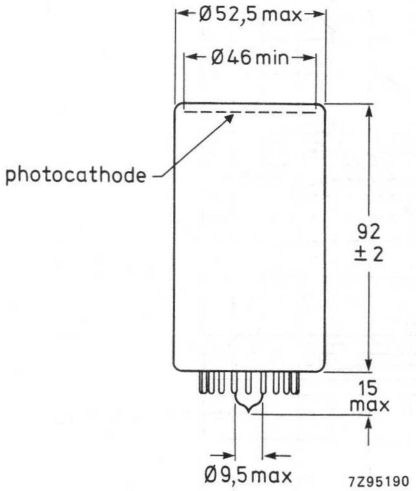

Fig. 5 XP3102.

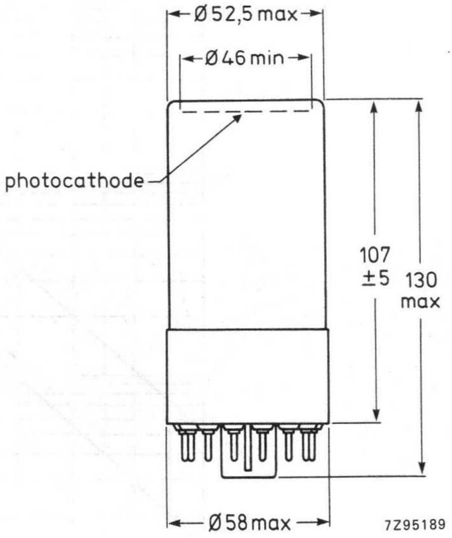

Fig. 6 XP3102B.

Base	19-pin all-glass
Net mass	100 g

Base	14-pin IEC 67-1-16a (JEDEC B14-38)
Net mass	145 g

PIN CONNECTIONS

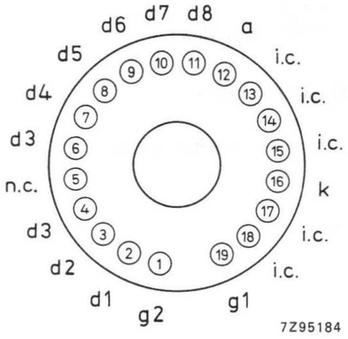

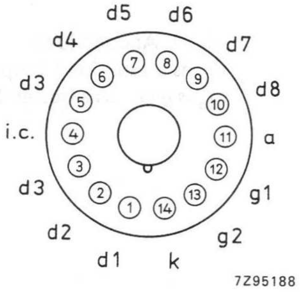

ACCESSORIES

Socket

for XP3102	type FE2019
for XP3102B	type FE1014

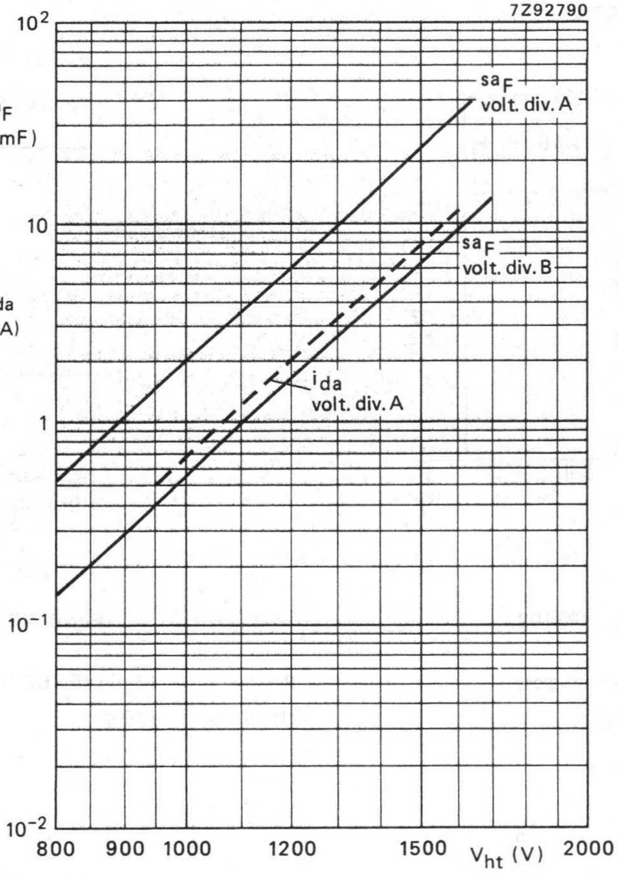

Fig. 7 Anode blue sensitivity sa_F, and anode dark current i_{da} as a function of supply voltage V_{ht}.
i_{da} is given as a dotted line to indicate its principle behaviour only.

XP3202 replaces XP2202
XP3202B replaces XP2202B

8-STAGE PHOTOMULTIPLIER TUBES

- 46 mm useful diameter head-on type
- Flat window
- Semi-transparent bi-alkaline type D photocathode
- High cathode sensitivity; excellent collection from the entire cathode
- Good pulse amplitude resolution
- Low dark current
- Good stability
- For scintillation detection applications, laboratory and industrial photometry

QUICK REFERENCE DATA

Spectral sensitivity characteristic		type D
Useful diameter of the photocathode		> 46 mm
Cathode blue sensitivity		11,5 μA/mF
Supply voltage for anode blue sensitivity = 1,5 A/lmF		950 V
Anode dark current at anode blue sensitivity = 1,5 A/lmF		1 nA
Pulse amplitude resolution (^{137}Cs)		≈ 7,2%
Linearity with voltage divider B	up to	≈ 200 mA

To be read in conjunction with *General Operational Recommendations Photomultiplier Tubes.*

GENERAL CHARACTERISTICS

Window

		notes
Material	lime glass	
Shape	plano-plano	
Refractive index at 400 mm	1,54	

Photocathode

		2
Semi-transparent, head-on		
Material	Sb K Cs	
Useful diameter	> 46 mm	
Spectral sensitivity characteristic (Fig. 4)	type D	
Maximum spectral sensitivity	400 ± 30 nm	
Luminous sensitivity	≈ 70 μA/lm	3 ←
Blue sensitivity	typ. 11,5 μA/lmF > 9,0 μA/lmF	 1
Spectral sensitivity at 400 nm	≈ 85 mA/W	4

Multiplier system

Number of stages	8
Dynode structure	linear focused
Dynode material	CuBe
Capacitances	
anode to final dynode	≈ 3 pF
anode to all	≈ 5 pF

Magnetic field, Fig. 1

When the photocathode is uniformly illuminated the anode current is halved (at V_{ht} = 1200 V)
– at a magnetic flux density of 0,15 mT perpendicular to the tube axis and to axis a;
– at a magnetic flux density of 0,3 mT perpendicular to the tube axis and parallel to axis a.

It is recommended that the tube be screened against the influence of magnetic fields by a mu-metal shield protruding > 15 mm beyond the photocathode.

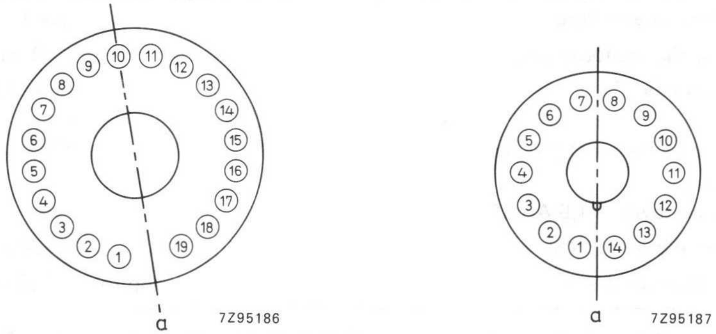

XP3202

XP3202B

Fig. 1 Axis "a" with respect to base pins (bottom view).

RECOMMENDED CIRCUITS

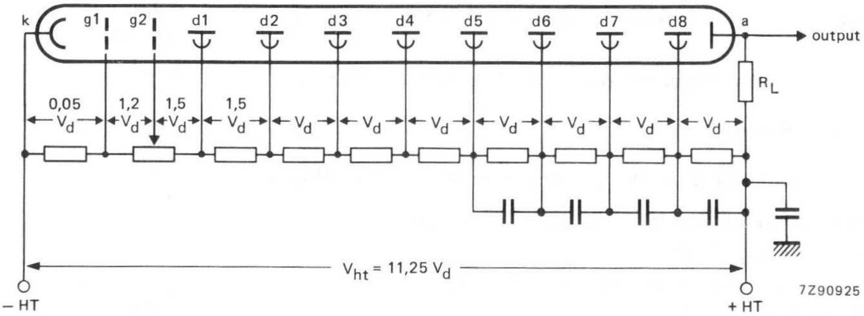

Fig. 2 Voltage divider A.

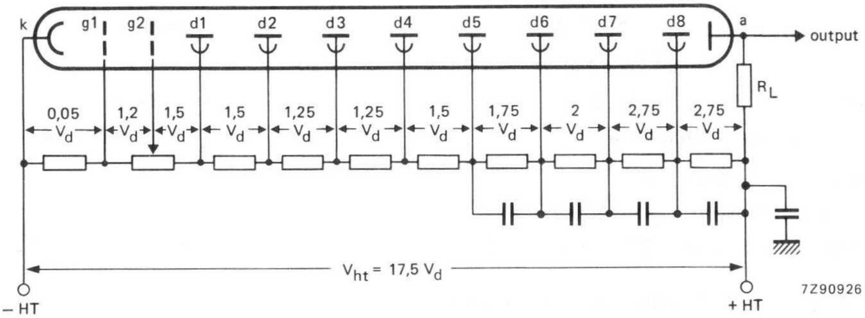

Fig. 3 Voltage divider B.

k = cathode
g1 = focusing electrode
g2 = accelerating electrode

Typical value of capacitors: 10 nF

dn = dynode no.
a = anode
R_L = load resistor

TYPICAL CHARACTERISTICS

		notes
With voltage divider A (Fig. 2)		5
Supply voltage for an anode blue sensitivity of 1,5 A/lmF (Fig. 7)	$<$ 1250 V typ. 950 V	1
Supply voltage for an anode sensitivity of 7,5 A/lmF ($\approx$ 60 kA/W)	$\approx$ 1250 $<$ 1600 V	
Gain at V_{ht} = 950 V	$\approx 1,3 \times 10^5$	
Anode dark current at an anode blue sensitivity of 1,5 A/lmF (Fig. 7)	$<$ 5 nA typ. 1 nA	1, 6
Pulse amplitude resolution for ^{137}Cs at an anode blue sensitivity of 1,5 A/lmF	$\approx$ 7,2%	1, 7
Pulse amplitude resolution for ^{55}Fe at an anode blue sensitivity of 7,5 A/lmF	$\approx$ 42%	1, 8
Mean anode sensitivity deviation		9
long term (16 h)	$\approx$ 1%	
after change of count rate	$\approx$ 1%	
versus temperature between 20 and 60 °C at 450 nm	$\approx$ 0,2% per K	
Anode pulse rise time at V_{ht} = 1200 V	$\approx$ 3 ns	10
Anode pulse duration at half height at V_{ht} = 1200 V	$\approx$ 4,5 ns	10
Signal transit time at V_{ht} = 1200 V	$\approx$ 34 ns	10
Anode current linear within 2% at V_{ht} = 1200 V	up to $\approx$ 50 mA	
With voltage divider B (Fig. 3)		11
Anode blue sensitivity at V_{ht} = 1600 V	$\approx$ 9,5 A/lmF	
Anode current linear within 2% at V_{ht} = 1600 V	up to $\approx$ 200 mA	

LIMITING VALUES (absolute maximum rating system)

Supply voltage	max. 1700 V	12
Continuous anode current	max. 0,2 mA	13
Voltage between first dynode and photocathode	max. 500 V min. 150 V	14
Voltage between focusing electrode g_1 and photocathode	max. 20 V	
Voltage between accelerating electrode g_2 and photocathode	max. 500 V	
Voltage between consecutive dynodes	max. 300 V	
Voltage between anode and final dynode	max. 300 V	15
Ambient temperature range		
operational (for short periods)	max. +80 °C min. −30 °C	16
continuous operation and storage	max. +50 °C min. −30 °C	

Notes

1. Blue sensitivity, expressed in μA/lmF, is measured with a tungsten filament lamp with a colour temperature of 2856 ± 5K. Light is transmitted through a blue filter (Corning CS no. 5-58, polished to half stock thickness).
2. The bialkaline photocathode has a significant resistance which increases rapidly with reducing temperature. It is therefore recommended that is should not be exposed to light of too great an intensity; the cathode current should be limited, for example, to 1 nA at room temperature or 0,1 nA at −30 °C. If too high a photocurrent is passed, the cathode can no longer be considered an equipotential surface, and the focusing of electrons onto the first dynode will be affected, resulting in departure from linearity.
3. Luminous sensitivity is measured with a tungsten filament lamp with a colour temperature of 2856 ± 5K.
4. Spectral sensitivity is measured with a tungsten filament lamp with a colour temperature of 2856 ± 5K. Light is transmitted through an interferential filter. Spectral sensitivity at 400 nm, expressed in A/W, can be estimated by multiplying the blue sensitivity, expressed in A/lmF, by $7{,}7 \times 10^3$ for this type of tube.
5. Wherever possible, the power supply should be arranged so that the cathode is earthed and the anode is at + HT, however, it is sometimes necessary to supply the tube with the anode earthed and the cathode at −HT. Under these circumstances, erratic noise and dark current are generally increased and unstable, particularly after application of voltage. The glass envelope of the tube should be supported only be insulation resistance of $> 10^{15}\ \Omega$.
6. Dark current is measured at ambient temperature, after the tube has been in darkness for approx. 1 min. Lower values can be obtained after a longer stabilization period in darkness (approx. 30 min).
7. Pulse amplitude resolution for ^{137}Cs is measured with an NaI(Tl) cylindrical scintillator (Quartz et Silice serial no. 4856 or equivalent) with a diameter of 50 mm and a height of 50 mm (2" x 2"). The count rate used is $\approx 10^4$ c/s.
8. Pulse amplitude resolution for ^{55}Fe is measured with an NaI(Tl) cylindrical scintillator with a diameter of 25 mm and a height of 1 mm provided with a beryllium window. The count rate used is $\approx 2 \times 10^3$ c/s.
9. The means anode sensitivity deviation is measured by coupling an NaI(Tl) scintillator to the window of the tube. Long term (16 h) deviation is measured by placing a ^{137}Cs source at a distance from the scintillator such that the count rate is $\approx 10^4$ c/s corresponding to an average anode current of $\approx$ 300 nA. Anode sensitivity deviation after change of count rate is measured with a ^{137}Cs source at a distance of the scintillator such that the count rate can be changed from 10^4 c/s to 10^3 c/s corresponding to an average anode current of $\approx 1\ \mu$A and $\approx 0{,}1\ \mu$A respectively. Both tests are carried out according to ANSI−N42−9−1972 of IEEE recommendations.
10. Measured with a pulsed light source, with a pulse duration (FWHM) of < 1 ns; the cathode being completely illuminated. The rise time is determined between 10% and 90% of the amplitude of the anode pulse. The signal transit time is measured between the instant at which the illuminating pulse at the cathode becomes maximum, and the instant at which the anode pulse attains its maximum. Rise time, pulse duration and transit time vary as a function of high tension supply voltage V_{ht}, approximately as $V_{ht}^{-1/2}$.
11. To obtain a peak pulse current greater than that obtainable with divider A, it is necessary to increase the inter-dynode voltage of the stages progressively. Other dividers can be conceived to achieve other compromises. It is generally recommended that the voltage difference between one stage and the next is less than a factor of 2.

Notes (continued)

12. Total HT supply voltage, or the voltage at which the tube has an anode blue sensitivity of 40 A/lmF, (voltage for 1,5 A/lmF given on the test certificate, multiplied by 1,7), whichever is lower. For applications where dark current is critical, a maximum sensitivity of 15 A/lmF is recommended (voltage for 1,5 A/lmF, multiplied by 1,45).
13. A value of $< 10\ \mu A$ is recommended for applications requiring good stability.
14. Minimum value to obtain good collection in the output optics.
15. When calculating the anode voltage the voltage drop across the load resistor ahould be taken into account.
16. For type XP3202B this range of temperature is limited principally by stresses in the sealing layer of the base to the glass bulb. Where low temperature operation is contemplated, the supplier should be consulted.

Interchangeability

The pinnings of these 8-stage linear focused photomultiplier tubes have been designed to facilitate exchangeability of XP2202 and XP2202B.

The best performance will be obtained by using their own voltage divider. They can be directly mounted in sockets wired for the old types, involving only minor degraded characteristics. It is, however, advisable to connect at least g2 properly.

When mounting XP3202 in Sockets wired for XP2202 the cathode connection is secured by the electrode g1, connected to the cathode via the internal bialkali layer.

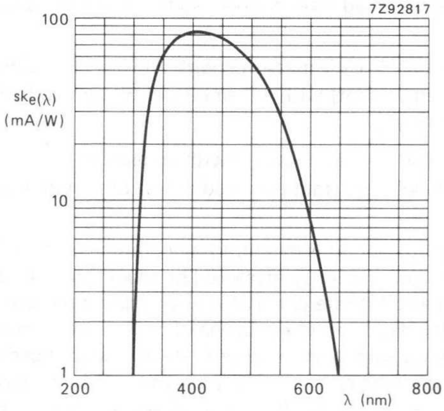

Fig. 4 Spectral sensitivity characteristic.

MECHANICAL DATA

Dimensions in mm

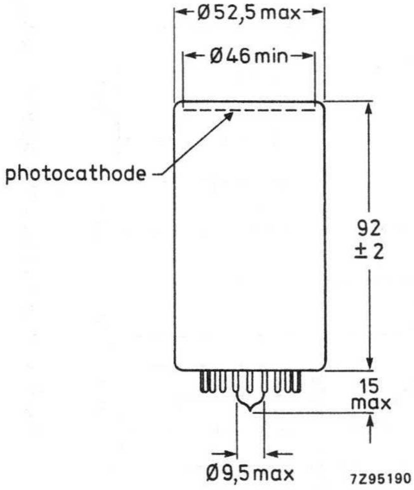

Fig. 5 XP3202.

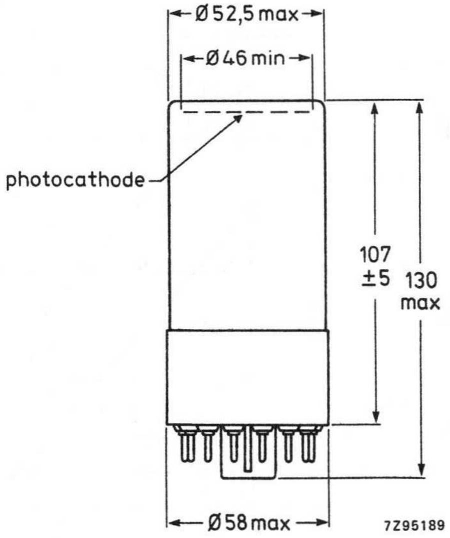

Fig. 6 XP3202B.

Base	19-pin all-glass
Net mass	100 g

Base	14-pin IEC 67-1-16a (JEDEC B14-38)
Net mass	145 g

PIN CONNECTIONS

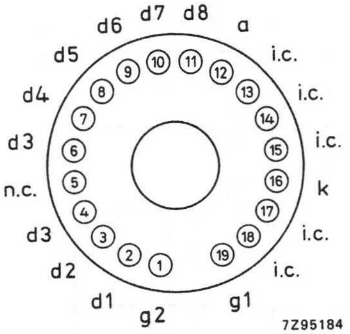

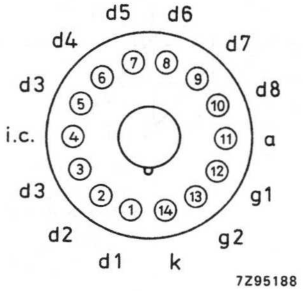

ACCESSORIES

Socket

for XP3202	type FE2019
for XP3202B	type FE1014

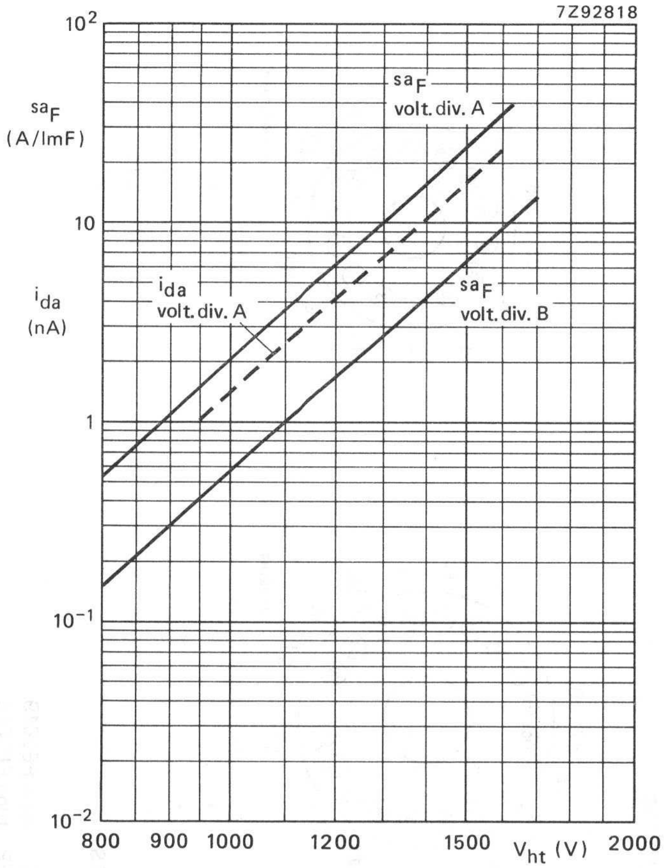

Fig. 7 Anode blue sensitivity sa_F, and anode dark current i_{da} as a function of supply voltage V_{ht}.
i_{da} is given as a dotted line to indicate its principle behaviour only.

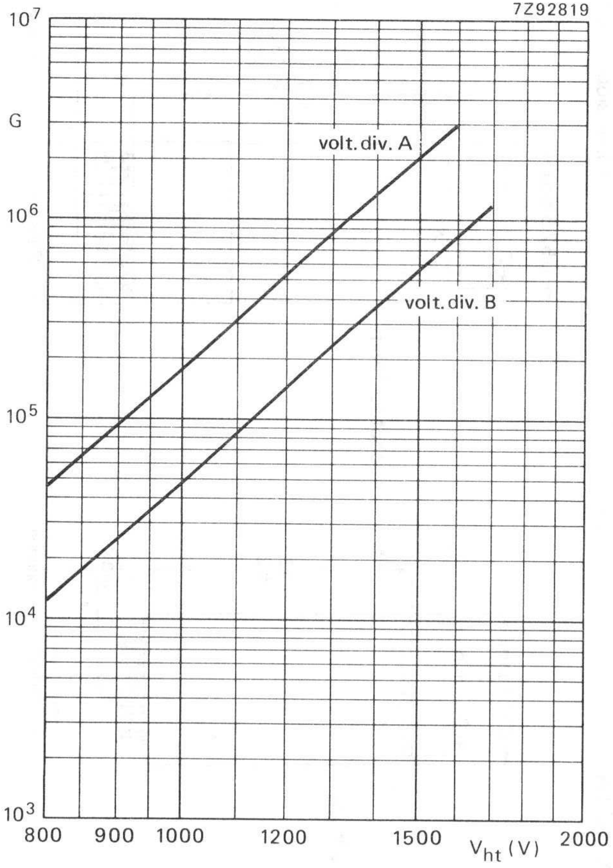

Fig. 8 Gain as function of supply voltage V_{hc}.

XP3422 replaces XP2422
XP3422B replaces XP2422B

8-STAGE PHOTOMULTIPLIER TUBES

- Hexagonal head-on type; useful size 56 mm across flats
- Flat window
- Semi-transparent bi-alkaline type D photocathode
- High cathode sensitivity; excellent collection from the entire cathode
- Very good pulse amplitude resolution
- Very low dark current
- Very good stability
- For nuclear medicine applications, e.g. gamma cameras

QUICK REFERENCE DATA

Spectral sensitivity characteristic	type D
Useful size of the photocathode	> 56 mm across flats
Cathode blue sensitivity	12 μA/lmF
Supply voltage for anode blue sensitivity = 1,5 A/lmF	950 V
Anode dark current at anode blue sensitivity = 1,5 A/lmF	0,5 nA
Pulse amplitude resolution (^{57}Co)	≈ 9,0%
Mean anode sensitivity deviation (30 days)	≈ 1%

To be read in conjunction with *General Operational Recommendations Photomultiplier Tubes.*

GENERAL CHARACTERISTICS

Window

		notes
Material	lime glass	
Shape	hexagonal, plano-plano	
Refractive index at 400 nm	1,54	

Photocathode

		notes
Semi-transparent, head-on		2
Material	Sb K Cs	
Useful size	> 56 mm across flats	
Spectral sensitivity characteristic (Fig. 3)	type D	
Maximum spectral sensitivity	400 ± 30 nm	
Luminous sensitivity	≈ 70 μA/lm	3
Blue sensitivity	typ. 12 μA/lmF > 9,0 μA/lmF	1
Spectral sensitivity at 400 nm	≈ 90 mA/W	4

Multiplier system

Number of stages	8
Dynode structure	linear focused
Dynode material	CuBe
Capacitances	
anode to final dynode	≈ 3 pF
anode to all	≈ 5 pF

Magnetic field, Fig. 1

When the photocathode is uniformly illuminated the anode current is halved (at V_{ht} = 1200 V)
– at a magnetic flux density of 0,10 mT perpendicular to the tube axis and to axis a;
– at a magnetic flux density of 0,25 mT perpendicular to the tube axis and parallel to axis a.

It is recommended that the tube be screened against the influence of magnetic fields by a mu-metal shield protruding > 15 mm beyond the photocathode.

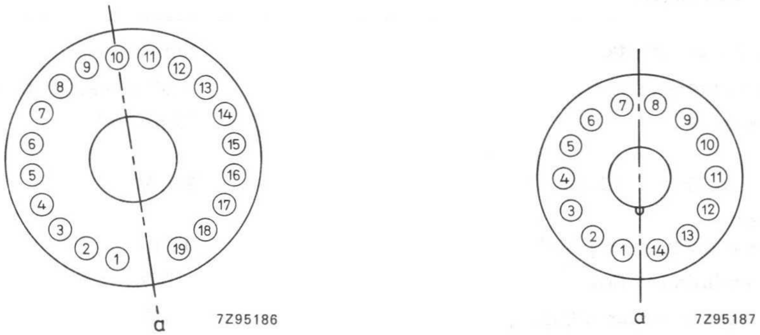

XP3422.

XP3422B.

Fig. 1 Axis "a" with respect to base pins (bottom view).

RECOMMENDED CIRCUIT

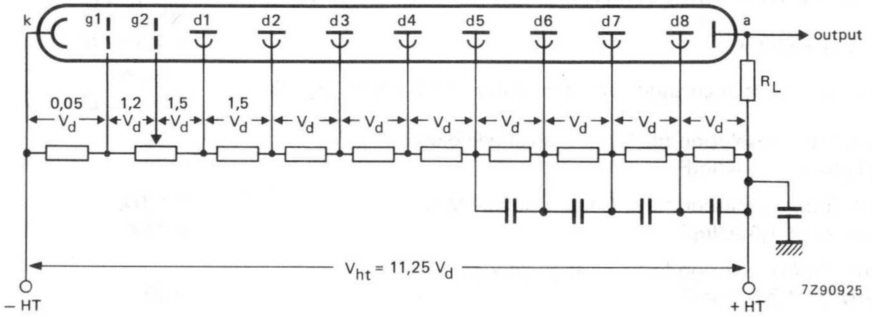

Fig. 2 Voltage divider A.

k = cathode
g1 = focusing electrode 1
g2 = accelerating electrode 2

dn = dynode no.
a = anode
R_L = load resistor

Typical value of capacitors: 10 nF

TYPICAL CHARACTERISTICS

		notes
With voltage divider A (Fig. 2)		5
Supply voltage for an anode blue sensitivity of 1,5 A/lmF (Fig. 6)	< 1250 V typ. 950 V	1
Gain at V_{ht} = 950 V	≈ 1,3 x 10^5	
Anode dark current at an anode blue sensitivity of 1,5 A/lmF (Fig. 6)	< 5 nA typ. 0,5 nA	1, 6
Pulse amplitude resolution for ^{137}Cs at an anode blue sensitivity of 1,5 A/lmF	≈ 7%	1, 7
Pulse amplitude resolution for ^{57}Co at an anode blue sensitivity of 1,5 A/lmF	≈ 9,0% ≈ 11%	1, 7 1, 17
Pulse amplitude resolution for ^{55}Fe at an anode blue sensitivity of 7,5 A/lmF	≈ 37%	1, 8
Peak to valley ratio for ^{55}Fe at an anode blue sensitivity of 7,5 A/lmF	≈ 40	1, 8
Mean anode sensitivity deviation		9
long term (16 h)	≈ 0,5%	
long term (30 days)	≈ 1%	
after change of count rate	≈ 0,8%	
versus temperature between 20 and 60 °C at 450 nm	≈ 0,1% per K	
Anode pulse rise time at V_{ht} = 1200 V	≈ 3 ns	10
Anode pulse duration at half height at V_{ht} = 1200 V	≈ 5 ns	10
Signal transit time at V_{ht} = 1200 V	≈ 37 ns	10
Anode current linear within 2% at V_{ht} = 1200 V	up to ≈ 100 mA	11

LIMITING VALUES (absolute maximum rating system)

Supply voltage	max.	1700 V	12
Continuous anode current	max.	0,2 mA	13
Voltage between first dynode and photocathode	max. min.	500 V 150 V	14
Voltage between focusing electrode g1 and photocathode	max.	20 V	
Voltage between accelerating electrode g2 and photocathode	max.	500 V	
Voltage between consecutive dynodes	max.	300 V	
Voltage between anode and final dynode	max.	300 V	15
Ambient temperature range			
operational (for short periods)	max. min.	+ 80 °C −30 °C	16
continuous operation and storage	max. min.	+ 50 °C −30 °C	

Notes

1. Blue sensitivity, expressed in μA/lmF, is measured with a tungsten filament lamp with a colour temperature of 2856 ± 5K. Light is transmitted through a blue filter (Corning CS no. 5-58, polished to half stock thickness).
2. The bialkaline photocathode has a significant resistance which increases rapidly with reducing temperature. It is therefore recommended that it should not be exposed to light of too great an intensity; the cathode current should be limited, for example, to 1 nA at room temperature or 0,1 nA at −30 °C. If too high a photocurrent is passed, the cathode can no longer be considered an equipotential surface, and the focusing of electrons onto the first dynode will be affected, resulting in departure from linearity.
3. Luminous sensitivity is measured with a tungsten filament lamp with a colour temperature of 2856 ± 5K.
4. Spectral sensitivity is measured with a tungsten filament lamp with a colour temperature of 2856 ± 5K. Light is transmitted through an interferential filter. Spectral sensitivity at 400 nm, expressed in A/W, can be estimated by multiplying the blue sensitivity, expressed in A/lmF, by $7{,}7 \times 10^3$ for this type of tube.
5. Wherever possible, the power supply should be arranged so that the cathode is earthed and the anode is at +HT, however, it is sometimes necessary to supply the tube with the anode earthed and the cathode at −HT. Under these circumstances, erratic noise and dark current are generally increased and unstable, particularly after application of voltage. The glass envelope of the tube should be supported only by insulators with an insulation resistance of $> 10^{15}$ ohm.
6. Dark current is measured at ambient temperature, after the tube has been in darkness for approx. 1 min. Lower values can be obtained after a longer stabilization period in darkness (approx. 30 min).
7. Pulse amplitude resolution for ^{137}Cs and ^{57}Co is measured with an NaI(Tl) cylindrical scintillator (Quartz et Silice serial no. 4856 or equivalent) with a diameter of 50 mm and a height of 50 mm (2" x 2"). The count rate used is $\approx 10^4$ c/s.
8. Pulse amplitude resolution for ^{55}Fe is measured with an NaI(Tl) cylindrical scintillator with a diameter of 25 mm and a height of 1 mm provided with a beryllium window. The count rate used is $\approx 2 \times 10^3$ c/s.
9. The mean anode sensitivity deviation is measured by coupling an NaI(Tl) scintillator to the window of the tube. Long term (16 h) deviation is measured by placing a ^{137}Cs source at a distance from the scintillator such that the count rate is $\approx 10^4$ c/s corresponding to an average anode current of $\approx$ 300 nA. Anode sensitivity deviation after change of count rate is measured with a ^{137}Cs source at a distance of the scintillator such that the count rate can be changed from 10^4 c/s to 10^3 c/s corresponding to an average anode current of $\approx 1\ \mu$A and $\approx 0{,}1\ \mu$A respectively. Both tests are carried out according to ANSI–N42–9–1972 of IEEE recommendations.
10. Measured with a pulsed light source, with a pulse duration (FWHM) of < 1 ns; the cathode being completely illuminated. The rise time is determined between 10% and 90% of the amplitude of the anode pulse. The signal transit time is measured between the instant at which the illuminating pulse at the cathode becomes maximum, and the instant at which the anode pulse attains its maximum. Rise time, pulse duration and transit time vary as a function of high tension supply voltage V_{ht}, approximately as $V_{ht}^{-1/2}$.
11. To obtain a peak pulse current greater than that obtainable with divider A, it is necessary to increase the inter-dynode voltage of the stages progressively. Other dividers can be conceived to achieve other compromises. It is generally recommended that the voltage difference between one stage and the next is less than a factor of 2.

Notes (continued)

12. Total HT supply voltage, or the voltage at which the tube has an anode blue sensitivity of 40 A/lmF, (voltage for 1,5 A/lmF given on the test certificate, multiplied by 1,7), whichever is lower. For applications where dark current is critical, a maximum sensitivity of 15 A/lmF is recommended (voltage for 1,5 A/lmF, multiplied by 1,45).
13. A value of $< 10\ \mu A$ is recommended for applications requiring good stability.
14. Minimum value to obtain good collection in the input optics.
15. When calculating the anode voltage the voltage drop across the load resistor should be taken into account.
16. For type XP3422B this range of temperature is limited principally by stresses in the sealing layer of the base to the glass bulb. Where low temperature operation is contemplated, the supplier should be consulted.
17. Pulse amplitude resolution is measured with an NaI(Tl) cylindrical scintillator (Quartz et Silice serial no. 4186 or equivalent) with a diameter of 76 mm and height of 76 mm (3" x 3"). The count rate used is $\approx 10^4$ c/s.

Interchangeability

The pinnings of these 8-stage linear focused photomultiplier tubes have been designed to facilitate exchangeability of old 10-stage venetian blind types.
The best performance will be obtained by using their own voltage divider but they can be directly mounted in sockets wired for the old types, involving only minor degraded characteristics.

When mounting XP3422 in sockets wired for XP2422 the cathode connection is secured by the electrode g1, connected to the cathode via the internal bialkali layer.

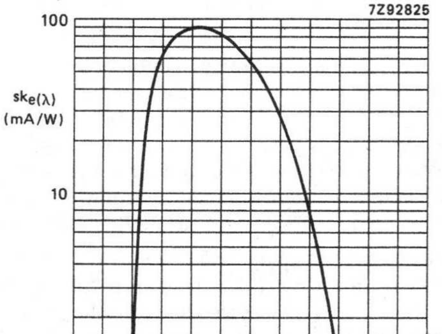

Fig. 3 Spectral sensitivity characteristic.

MECHANICAL DATA

Dimensions in mm

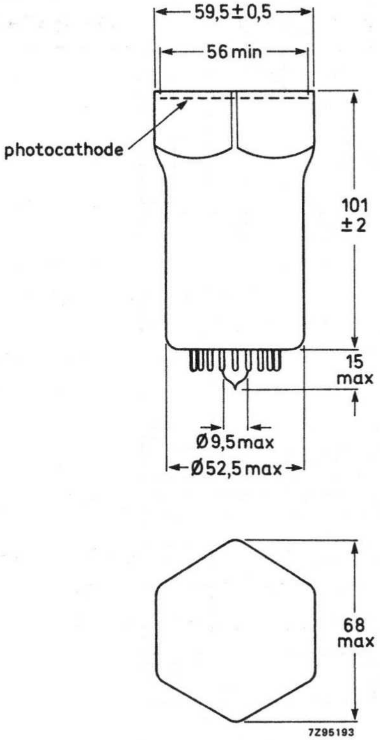

Fig. 4 XP3422.

Base 19-pin all-glass

Net mass 120 g

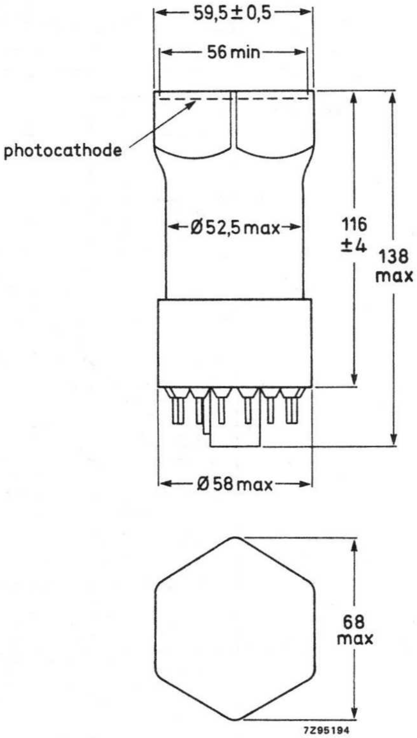

Fig. 5 XP3422B.

Base 14-pin IEC 67-1-16a (JEDEC B 14-38)

Net mass 165 g

PIN CONNECTIONS

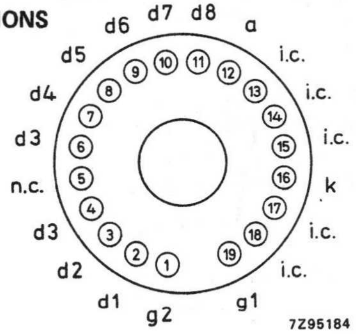

XP3422.

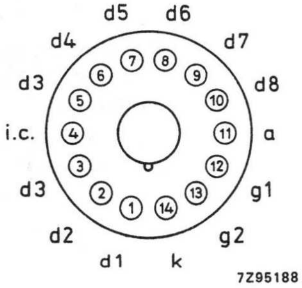

XP3422B.

ACCESSORIES

Socket
for XP3422: type FE2019
for XP3422B: type FE1014

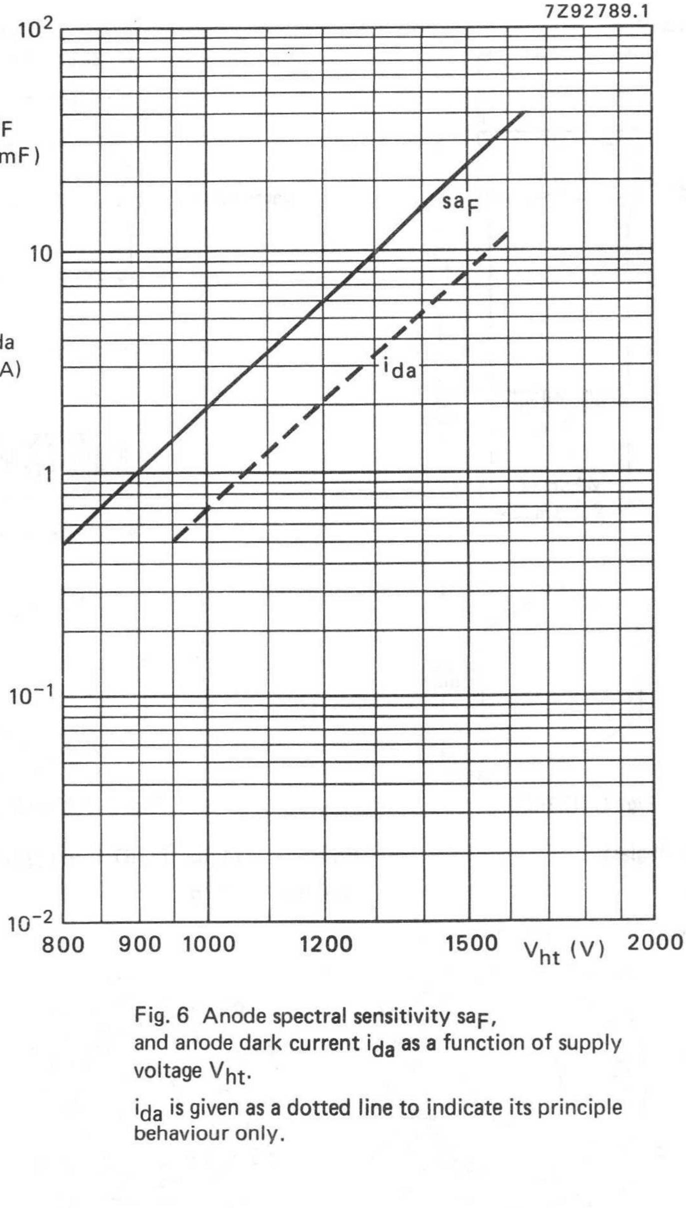

Fig. 6 Anode spectral sensitivity sa_F, and anode dark current i_{da} as a function of supply voltage V_{ht}.

i_{da} is given as a dotted line to indicate its principle behaviour only.

8-STAGE PHOTOMULTIPLIER TUBES

- 68 mm useful diameter head-on types
- plano concave window
- semi-transparent bi-alkaline type D photocathode
- high cathode sensitivity
- good pulse linearity and time characteristics
- good compromise pulse amplitude resolution/time characteristics
- for scintillation detection applications, e.g. high energy physics experiments

QUICK REFERENCE DATA

Spectral sensitivity characteristic		type D
Useful diameter of the photocathode		> 68 mm
Quantum efficiency at 400 nm		27 %
Cathode blue sensitivity at 400 nm		11,5 μA/lmF
Supply voltage for a gain of 1 x 10^6		1350 V
Pulse amplitude resolution for ^{137}Cs		≈ 7,2 %
Anode pulse rise time (with voltage divider B)		≈ 3 ns
Linearity		
with voltage divider A	up to	≈ 50 mA
with voltage divider B	up to	≈ 200 mA

To be read in conjunction with *General Operational Recommendations Photomultiplier Tubes.*

GENERAL CHARACTERISTICS

		notes
Window		
Material	lime glass	
Shape	plano-concave	
Refractive index at 400 nm	1,54	
Photocathode		2
Semi-transparent, head-on		
Material	Sb K Cs	
Useful diameter	> 68 mm	
Spectral sensitvity characteristic, Fig. 4	type D	
Maximum spectral sensitivity at	400 ± 30 nm	
Quantum efficiency at 400 nm	27%	
Blue sensitivity	typ. 11,5 μA/lmF	1
	> 9 μA/lmF	
Spectral sensitivity at 400 nm	≈ 85 mA/W	4
Luminous sensitivity	≈ 75 μA/lm	3

Multiplier system

Number of stages	8
Dynode structure	linear focused
Dynode material	CuBe
Capacitances	
anode to final dynode	≈ 3 pF
anode to all	≈ 5 pF

Magnetic field, Fig. 1

When the photocathode is uniformly illuminated the anode current is halved (at V_{ht} = 1500 V)
- at a magnetic flux density of 0,1 mT perpendicular to the tube axis and to axis a;
- at a magnetic flux density of 0,2 mT perpendicular to the tube axis and parallel to axis a.

It is recommended that the tube be screened against the influence of magnetic fields by a mu-metal shield protruding > 15 mm beyond the photocathode.

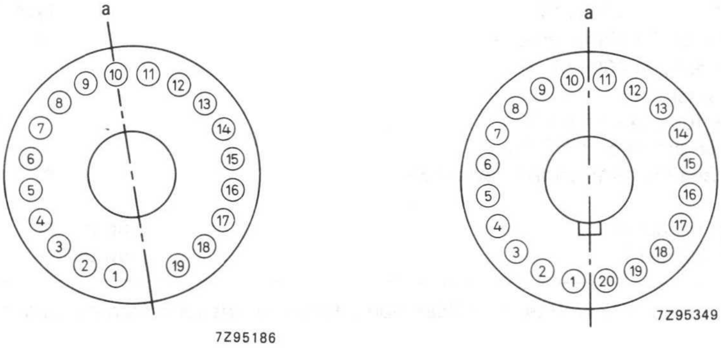

XP3462

XP3462B

Fig. 1 Axis "a" with respect to base pins (bottom view).

RECOMMENDED CIRCUITS

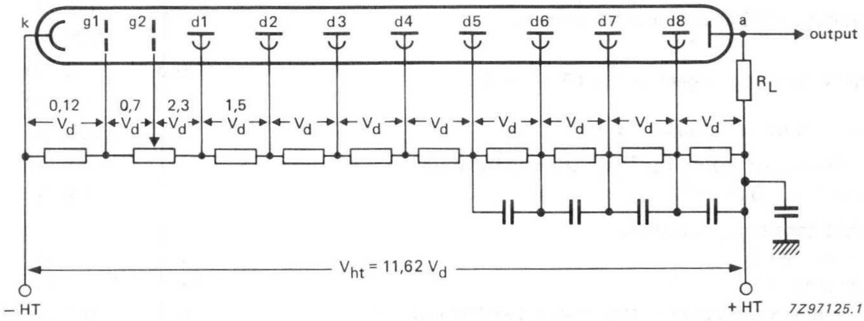

Fig. 2 Voltage divider A.

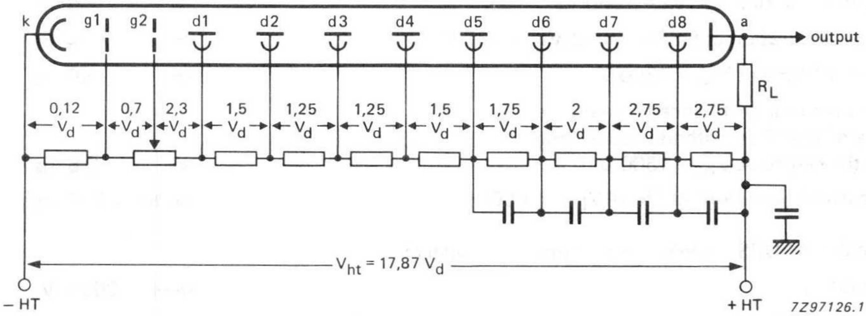

Fig. 3 Voltage divider B.

k = cathode
g1 = focusing electrode 1
g2 = accelerating electrode 2

dn = dynode no.
a = anode
R$_L$ = load resistor

Typical value of capacitors: 10 nF

TYPICAL CHARACTERISTICS

			notes
With voltage divider A (Fig. 2)			5
Supply voltage for a gain of 1 x 10^6 (Fig. 8)	typ. <	1350 V 1600 V	
Anode dark current at a gain of 1 x 10^6 (Fig. 8)	typ. <	2 nA 20 nA	6, 8
Background noise at a gain of 1 x 10^6	≈	5000 c/s	7
Pulse amplitude resolution for ^{137}Cs at an anode blue sensitivity of 1,5 A/lmF	≈	7,2 %	10
Mean anode sensitivity deviation,			
long term (16 h)	≈	1 %	16
after change of count rate	≈	1 %	
versus temperature between 0 and 40 °C at 450 nm	≈	0,2 %	
Anode current linear within 2% at V_{ht} = 1350 V	up to	≈ 50 mA	
With voltage divider B (Fig. 3)			5
Gain at V_{ht} = 1650 V (Fig. 8)	≈	1 x 10^6	
Anode pulse rise time at V_{ht} = 1600 V	≈	3 ns	9
Anode pulse duration at half height at V_{ht} = 1600 V	≈	4 ns	9
Signal transit time at V_{ht} = 1600 V	≈	40 ns	9
Signal transit time difference between the centre of the photocathode and 30 mm from the centre at V_{ht} = 1600 V	≈	2,5 ns	
Anode current linear within 2% at V_{ht} = 1600 V	up to	≈ 200 mA	

LIMITING VALUES (absolute maximum rating system)

Supply voltage	max.	2000 V	11
Continuous anode current	max.	0,2 mA	14
Voltage between first dynode and photocathode	max. min.	700 V 300 V	12
Voltage between focusing electrode g_1 and photocathode	max.	20 V	
Voltage between accelerating electrode g_2 and photocathode	max.	700 V	
Voltage between consecutive dynodes	max.	400 V	
Voltage between anode and final dynode	max. min.	600 V 80 V	13
Ambient temperature range			
operational (for short periods)	max. min.	+ 80 °C −30 °C	15
continuous operation and storage	max. min.	+ 50 °C −30 °C	

Notes

1. Blue sensitivity, expressed in μA/lmF, is measured with a tungsten filament lamp with a colour temperature of 2856 ± 5K. Light is transmitted through a blue filter (Corning CS no. 5-58, polished to half stock thickness).
2. The bialkaline photocathode has a significant resistance which increases rapidly with reducing temperature. It is therefore recommended that it should not be exposed to light of too great an intensity; the cathode current should be limited, for example, to 1 nA at room temperature or 0,1 nA at −30 °C. If too high a photocurrent is passed, the cathode can no longer be considered an equipotential surface, and the focusing of electrons onto the first dynode will be affected, resulting in departure from linearity.
3. Luminous sensitivity is measured with a tungsten filament lamp with a colour temperature of 2856 ± 5K.
4. Spectral sensitivity is measured with a tungsten filament lamp with a colour temperature of 2856 ± 5K. Light is transmitted through an interferential filter. Spectral sensitivity at 400 nm, expressed in A/W, can be estimated by multiplying the blue sensitivity, expressed in A/lmF, by $7{,}7 \times 10^3$ for this type of tube.
5. To obtain a peak pulse current greater than that obtainable with divider A, it is necessary to increase the inter-dynode voltage of the stages progressively. Divider circuit B is an example of a "progressive" divider, giving a compromise between gain, speed and linearity. Other dividers can be conceived to achieve other compromises. It is generally recommended that the voltage difference between one stage and the next is less than a factor of 2.
6. Wherever possible, the power supply should be arranged so that the cathode is earthed and the anode is at + HT, however, it is sometimes necessary to supply the tube with the anode earthed and the cathode at −HT. Under these circumstances, erratic noise and dark current are generally increased and unstable, particularly after application of voltage. The glass envelope of the tube should be supported only by insulators with an insulation resistance of $> 10^{15}\ \Omega$.
7. Noise is measured at ambient temperature. After having been stored with its protective hood, the tube is placed in darkness with V_{ht} set to a value to give a gain of 1×10^6. After a 5 min. stabilization period noise pulses with a threshold of 0,05 pC (corresponding to 0,3 photoelectron) are recorded. Lower values can be obtained after a longer stabilization period.
8. Dark current is measured at ambient temperature, after the tube has been in darkness for approx. 1 min. Lower values can be obtained after a longer stabilization period in darkness (approx. 30 min).
9. Measured with a pulsed light source, with a pulse duration (FWHM) of < 1 ns; the cathode being completely illuminated. The rise time is determined between 10% and 90% of the amplitude of the anode pulse. The signal transit time is measured between the instant at which the illuminating pulse at the cathode becomes maximum, and the instant at which the anode pulse attains its maximum. Rise time, pulse duration and transit time vary as a function of high tension supply voltage V_{ht}, approximately as $V_{ht}^{-1/2}$.
10. Pulse amplitude resolution for ^{137}Cs is measured with an NaI(Tl) cylindrical scintillator (Quartz et Silice serial no. 4186 or equivalent) with a diameter of 76 mm and a height of 76 mm. The count rate used is $\approx 10^4$ c/s.
11. Total HT supply voltage, or the voltage at which the tube has a gain of 3×10^6, whichever is lower.
12. Minimum value to obtain good collection in the input optics.

13. When calculating the anode voltage, the voltage drop across the load resistor should be taken into account.
14. A value of $< 10\ \mu A$ is recommended for applications requiring good stability.
15. For type XP3462B this range of temperature is limited principally by stresses in the sealing layer of the base to the glass bulb. Where low temperature operation is contemplated, the supplier should be consulted.
16. The mean anode sensitivity deviation is measured by coupling an NaI(Tl) scintillator to the window of the tube. Long term (16 h) deviation is measured by placing a ^{137}Cs source at a distance from the scintillator such that the count rate is $\approx 10^4$c/s corresponding to an average anode current of ≈ 300 nA. Anode sensitivity deviation after change of count rate is measured with a ^{137}Cs source at a distance of the scintillator such that the count rate can be changed from 10^4c/s to 10^3c/s corresponding to an average anode current of $\approx 1\ \mu A$ and $\approx 0,1\ \mu A$ respectively. Both tests are carried out according to ANSI–N42–9–1972 of IEEE recommendations.

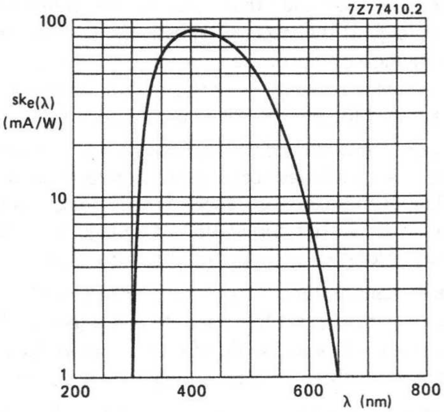

Fig. 4 Spectral sensitivity characteristic.

MECHANICAL DATA

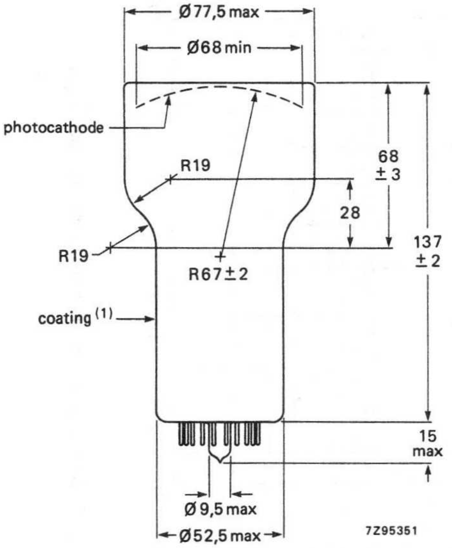

Fig. 5 XP3462.

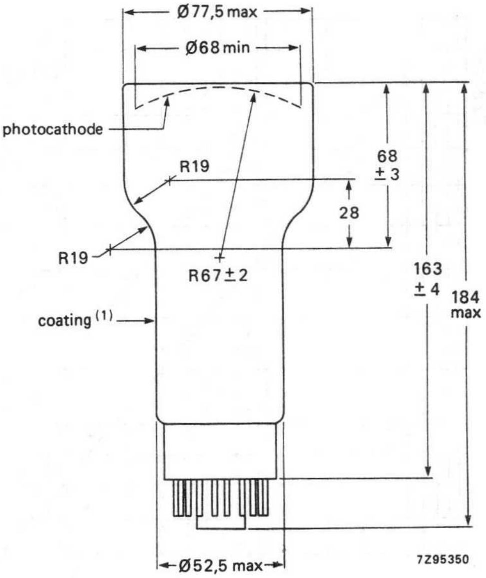

Fig. 6 XP3462B.

Base	19-pin all-glass
Net mass	200 g

Base*	20-pin IEC 67-1-42a, Jedec B20-102
Net mass	245 g

PIN CONNECTIONS

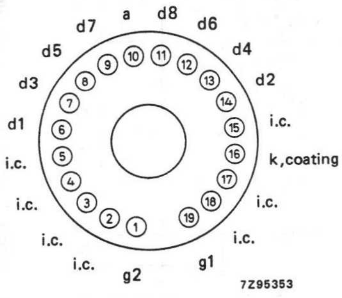

XP3462

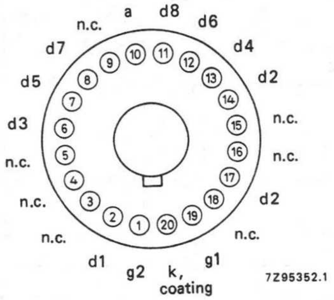

XP3462B

ACCESSORIES

Socket

for XP3462	type FE2019
for XP3462B	type FE1020

---

(1) The envelope of the tube is covered with a conductive coating, connected to the cathode. On top of this a black paint is applied which is neither guaranteed to be light tight nor isolating.
Care should be taken to avoid electric shock.

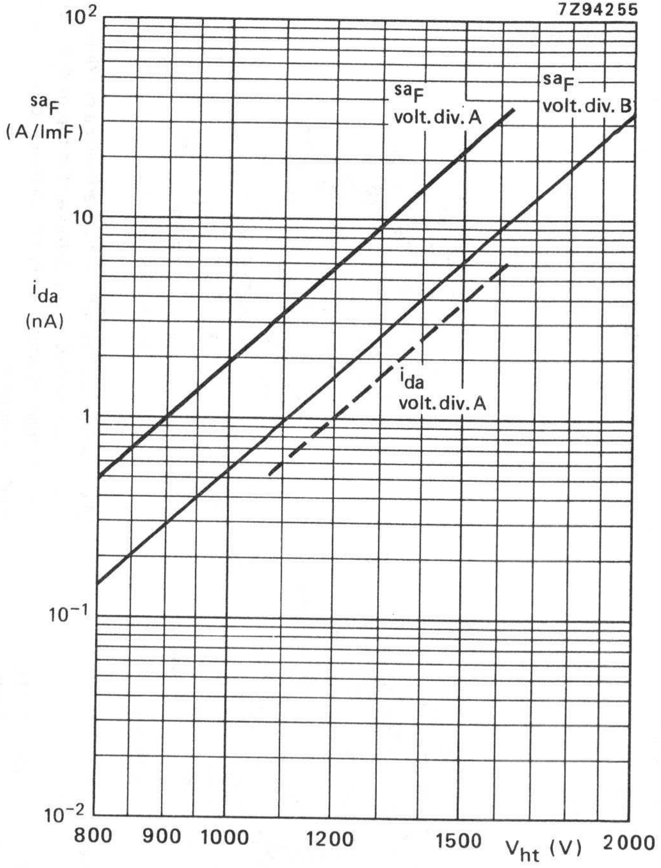

Fig. 7 Anode spectral sensitivity, $sa_{e(\lambda)}$, and anode dark current, i_{da} as a function fo supply voltage V_{ht}.

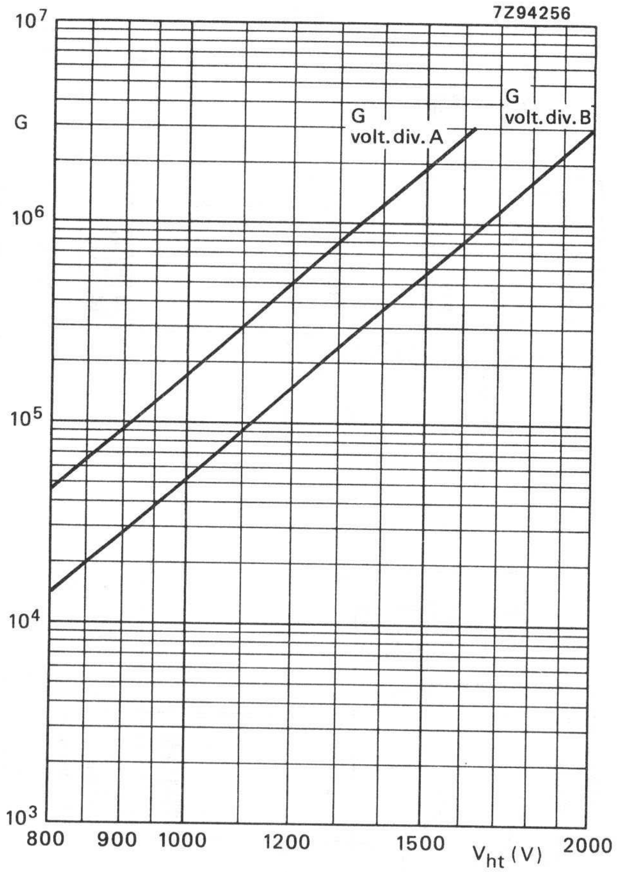

Fig. 8 Gain G as a function of supply voltage V_{ht}.

10-STAGE 64-CHANNEL PHOTOMULTIPLIER TUBE

- 64 independent outputs
- 8 x 8 matrix
- semi-transparent bi-alkaline type D photocathode
- good life time
- for fibre read-out, Cerenkov imaging, spectrophotometry

QUICK REFERENCE DATA

Spectral sensitivity characteristic	type D
Useful area of the photocathode	20 mm x 20 mm
Cathode spectral sensitivity at 400 nm	40 mA/W
Supply voltage for a gain of 1 x 10^6	1400 V
Anode pulse rise time at 1400 V	4,8 ns

To be read in conjunction with General Operational Recommendations Photomultiplier Tubes.

GENERAL CHARACTERISTICS

Window

Material	borosilicate glass
Shape	plano-plano
Refractive index at 400 nm	1,50

Photocathode

Type	semi-transparent, head-on
Material	SbKCs
Useful area	20 mm x 20 mm
Spectral sensitivity characteristic	type D
Maximum spectral sensitivity	400 ± 30 nm
Cut-off at	280/620 nm

Multiplier system

Number of stages	10

Output

Segmented output electrode	last dynode
Number of elements	64
Arrangement	matrix 8 x 8
Pitch	2,54 mm
Useful area of elements	2,54 mm x 2,54 mm
Output pulse polarity	positive

RECOMMENDED CIRCUIT

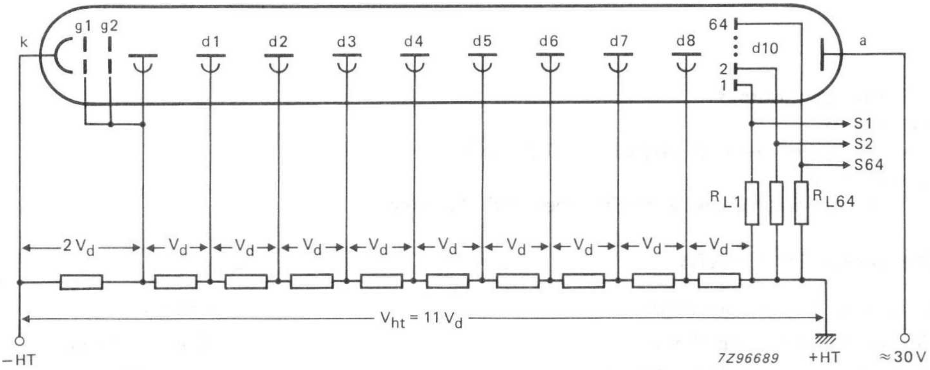

Fig. 1 Voltage divider.

k = cathode
gn = grid no.
dn = dynode no.
a = anode
R_{Ln} = load resistor no.

Remarks

- With such a voltage divider the multi-output collector (d10) operates as a dynode and output signals are positive.
- By connecting the anode electrode to ground the multi-output collector (d10) operates as an electron collector and output signals are negative.
- In this case the electron gain is considerably reduced (by about a factor 6) due to suppression of the last amplification stage.

TYPICAL CHARACTERISTICS

(with voltage divider as shown in Fig. 1).				notes
Photocathode sensitivity at 400 nm	approx.	40	mA/W	1
Gain at 1400 V, Fig. 3	approx.	$1{,}0 \times 10^6$		
Electron gain uniformity for 60 channels	max.	5/1		
Number of channels with a gain below the nominal gain but $\geqslant 10^5$	max.	4		
Output pulse rise time at 1400 V	approx.	4,8	ns	
Output dark current per output element at 1400 V	approx.	1	nA	
Cross talk between adjacent elements	$<$	5	%	2
Life time information				3

LIMITING VALUES (Absolute maximum rating system)

Supply voltage between		
last dynode (multi-output element) and cathode	1800	V
anode and last dynode	80	V
Total average output current (sum of the 64 outputs)	50	µA
Average output current per output element	5	µA

RECOMMENDATIONS

* Potential of the base metallic ring preferably at ground.

* Do not solder on the pins or the metallic ring.

* Do not deform the pins by e.g. bending or filing.

* Grids g1 and g2 can be used for gating operation.

* Connector for the 8 x 8 multi-output: single or double connecting strips with a pitch of 2,54 mm and which can be put side by side are available from i.a. Berg Electronics (Du Pont de Nemours & Co. Inc.), ref connector Mini-PV/mini latch 10.T5.01F.

Notes

1. Spectral sensitivity is measured with a tungsten filament lamp with a colour temperature of 2856 ± 5 K. Light is transmitted through an interferential filter. Spectral sensitivity at 400 nm is expressed in A/W.
2. The tube is exposed to a 2 mm x 2 mm parallel light beam centered on the pixel to be tested. The currents of this pixel and one of the adjacent ones are recorded. The crosstalk is given by the ratio of those two values.
3. Information on life time: no significant change of anode sensitivity has been noted after charge delivery at the anode of about 40 °C, the photocathode being uniformly illuminated.

MECHANICAL DATA

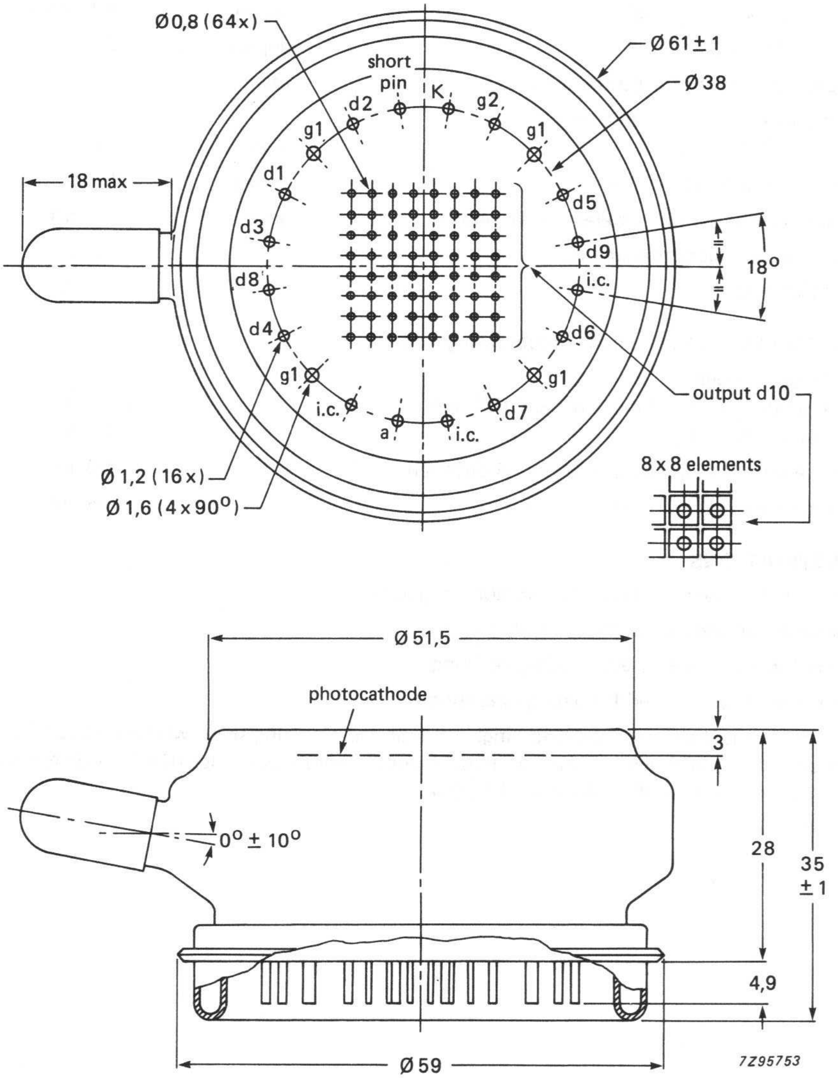

Fig. 2.

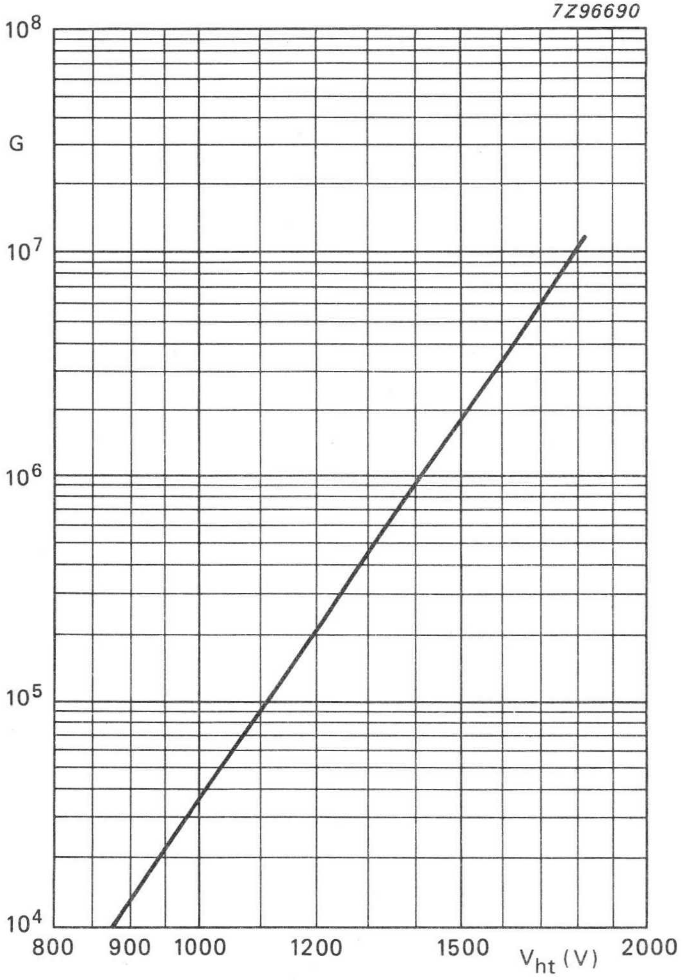

Fig. 3 Gain versus high voltage.

PHOTOTUBES

PHOTOTUBE

- Head-on type vacuum diode with 20 mm useful diameter photocathode
- Flat window
- Semi-transparent bi-alkaline photocathode
- Fast, large-area detector for medium and high light levels
- For precision photometry and for detection in high-magnetic fields (high energy physics)

QUICK REFERENCE DATA

Spectral sensitivity characteristic	Fig. 2	
Useful diameter of the photocathode	> 20 mm	
Blue sensitivity of the photocathode	10,5 μA/lmF	
Spectral sensitivity of the photocathode at 440 nm	80 mA/W	←
Anode voltage	⩽ 1500 V	
Pulse rise time	≈ 3 ns	
Capacitance, anode to cathode	≈ 6 pF	

To be read in conjunction with *General Operational Recommendations Phototubes*

GENERAL CHARACTERISTICS

Window

Material	lime glass	
Shape	plano-plano	
Refractive index at 400 nm	1,54	

Photocathode

Type	semi-transparent, head-on		
Material	Sb Rb Cs		
Useful diameter	> 20 mm		
Spectral sensitivity characteristic	see Fig. 2		
Wavelength for maximum spectral sensitivity	420 ± 30 nm		
Spectral sensitivity at 440 nm	≈ 80 mA/W	note 2	←
Luminous sensitivity	≈ 100 μA/lm	note 3	
Blue sensitivity	typ. 10,5 μA/lmF > 7,0 μA/lmF	note 1	

Operating characteristics

Operating voltage, d.c.	1 to 1000 V	
Saturation voltage for anode current = 100 nA	≈ 10 V	
Dark current at V_{ht} = 350 V and R.H. 50 to 60%	typ. 10 pA < 100 pA	note 4
Anode pulse rise time at V_{ht} = 350 V	≈ 3 ns	
Capacitance, anode to cathode	≈ 6 pF	
Recommended angle between magnetic flux density and tube axis	< 70°	
Anode sensitivity drop at a magnetic flux density of 0,3 T, at an angle of 70° with respect to the tube axis, and V_{ht} = 300 V (see also Fig. 4)	≈ 10%	

LIMITING VALUES (Absolute maximum rating system)

Anode voltage, d.c.	max. 1500 V	
Cathode current		
peak	max. 50 nA/mm²	
mean, averaging time 1 s	max. 70 pA/mm²	
Total cathode current		
peak, at V_{ht} = 1000 V	max. 15 μA	notes 5, 6
mean, averaging time 1 s	max. 20 nA	
Ambient temperature range		
operational (for short periods of time)	max. + 80 °C min. −30 °C	
continuous operation and storage	max. + 50 °C min. −30 °C	

STABILITY

For most tubes, the decrease of anode sensitivity after 72 h, at a cathode current of 20 nA, V_{ht} = 350 V, is anticipated to be less than 2%.

For maximum stability it is recommended that the cathode current be minimized.

Warnings

1. After an idle period of more than 8 days a high voltage level should be applied in steps.
2. The cathode should not be exposed to direct sunlight.
3. The cathode is connected to the external conductive coating of the tube. Take care to avoid electric shock.

Notes

1. Blue sensitivity, expressed in μA/lmF, is measured with a tungsten filament lamp with a colour temperature of 2856 ± 5K. Light is transmitted through a blue filter (Corning CS no. 5-58, polished to half stock thickness).
2. Spectral sensitivity is measured with a tungsten filament lamp with a colour temperature of 2856 ± 5K. Light is transmitted through an interferential filter. Spectral sensitivity at 400 nm, expressed in A/W, can be estimated by multiplying the blue sensitivity, expressed in A/lmF, by 7,7 x 10^3 for this type of tube.
3. Luminous sensitivity is measured with a tungsten filament lamp with a colour temperature of 2856 ± 5K.
4. Dark current is measured at ambient temperature, after the tube has been in darkness for approx. 1 min. As the dark current is a leakage current, it is approximately proportional to the applied voltage. It can be minimized by operating the tube in a dry atmosphere (R.H. $<$ 10%).
5. Cathode uniformly illuminated.
6. The relationship between the incident luminous flux and the cathode current is linear (within measuring errors) when the anode voltage is higher than the saturation voltage.

MECHANICAL DATA

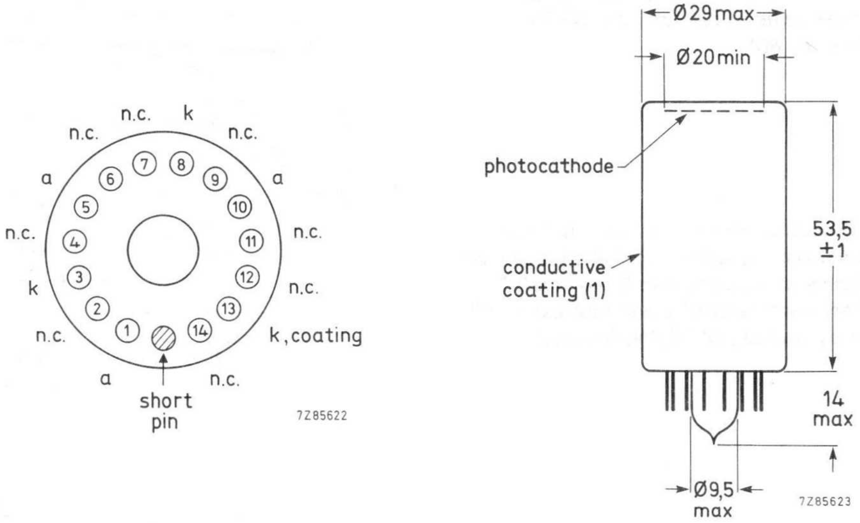

Fig. 1.

Base	14-pin all-glass
Net mass	25 g

(1) The envelope of the tube is covered with a conductive coating, connected to the cathode. Take care to avoid electric shock.

ACCESSORIES

Socket: type FE1114

Note: If minimum leakage current is required it is advised to use separate anode and cathode connections instead of a socket.

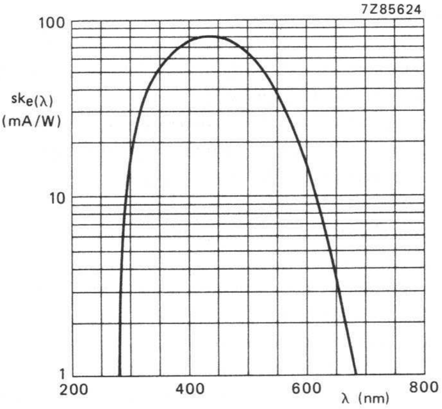

Fig. 2 Spectral sensitivity characteristic.

Curves of Figs 3 and 4 are typical results from measurements performed at CERN Experiment R808.

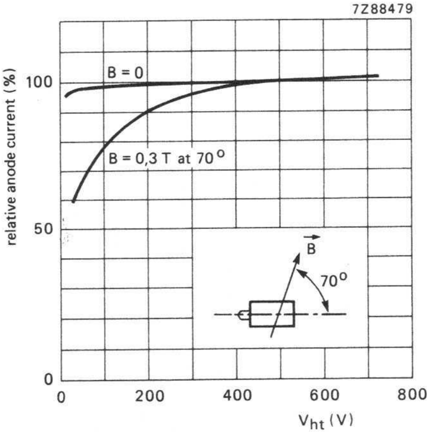

Fig. 3 Relative anode current as a function of supply voltage; typical curves. Tube is in a magnetic field with flux densities B = 0 or 0,3 T; angle between flux density and tube axis is 70°. (Curves by courtesy of CERN, Geneva.)

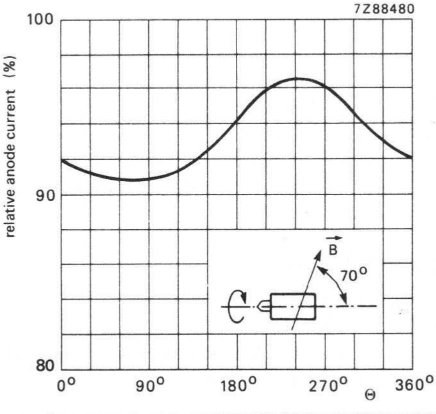

Fig. 4 Relative anode current as a function of tube rotation angle; typical curve. Tube is in a magnetic field with flux density B = 0,3 T; angle between flux density and tube axis is 70 °; V_{ht} = 300 V. (Curve by courtesy of CERN, Geneva.)

DISCRETE DYNODE ELECTRON MULTIPLIERS

16-STAGE ELECTRON MULTIPLIER

- High gain
- Integral voltage divider
- Main applications:
  - ultraviolet spectroscopy ($\lambda < 140$ nm)
  - detection of electrons in the energy range 100 eV to 10 keV
  - detection of heavy ions of energy > 1 keV
- Short response time
- Bakable

QUICK REFERENCE DATA

Useful area of photocathode	≈ 5 mm x 10 mm
Quantum efficiency at 68 nm	20%
Supply voltage for a gain of 10^7	typ. 2500 V
Anode pulse rise time	≈ 3 ns

GENERAL CHARACTERISTICS

Photocathode

Opaque, formed by the 1st dynode of the multiplier

Material	CuBe
Useful area	≈ 5 mm x 10 mm
Maximum spectral sensitivity	68 ± 10 nm
Quantum efficiency at 68 nm, see Fig. 2	≈ 20%

Multiplier system

Number of dynodes	16
Dynode structure	linear focused
Dynode material	CuBe
Capacitances	
anode to last dynode	≈ 3 pF
anode to all	≈ 5 pF
Total resistance of the integral voltage divider, wired on the dynode structure (Fig. 1)	16 x 1 MΩ

RECOMMENDED CIRCUIT

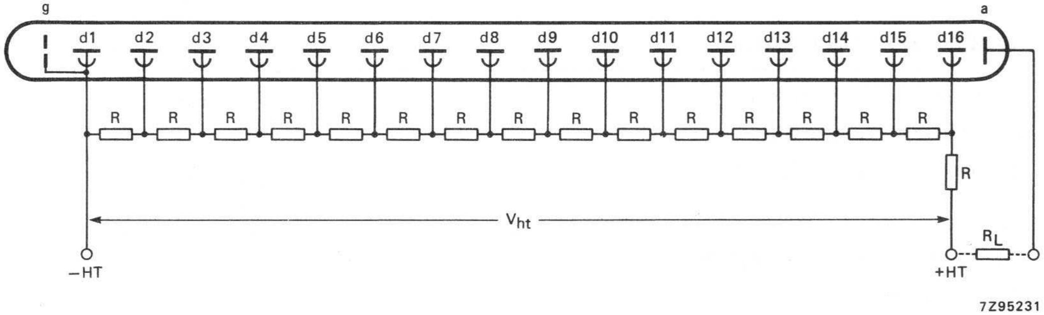

Fig. 1 Voltage divider A.

g = accelerating electrode (internally connected to d1); dn = dynode no.; a = anode; R_L = load resistor.
R = 1 MΩ resistors, wired on the structure.

CAUTION

The applied high voltage (~ 3 kV) is potentially hazardous.

TYPICAL CHARACTERISTICS

				notes
Supply voltage, V_{ht}, for a gain of 10^7 (Fig. 3)	$<$ typ.	3000 2500	V V	1
Anode dark current at a gain of 10^7	$<$	0,1	nA	
Anode pulse rise time at V_{ht} = 2500 V	≈	3	ns	
Anode pulse duration at half height at V_{ht} = 2500 V	≈	5	ns	
Signal transit time at V_{ht} = 2500 V	≈	30	ns	

LIMITING VALUES (Absolute maximum rating system)

Supply voltage	max.	3500	V	2
Continuous anode current (a maximum of 10 μA is recommended in applications requiring good stability)	max.	50	μA	
Baking temperature	max.	300	°C	
Operating ambient pressure	max.	1×10^{-3}	Pa	

CONSTRUCTION

The electron multiplier is delivered in a roughly evacuated cylindrical glass envelope; this is to be opened before use, see notes 3 and 4.

A 19-pin glass base supports the multiplier structure and provides for the electrical connections. An emitting filament is also incorporated which can be used for measurement of gain using the single-electron spectrum method, see note 5.

DEVELOPMENT DATA

Notes

1. Use a well stabilized high-voltage supply; 1% change of supply voltage causes $>$ 10% change of gain (see Fig. 3).
2. 3500 V or the voltage at which the gain reaches 3×10^8, whichever is lower.
3. To open the envelope scribe the pumping stem with a file and touch the scribe mark with the heated end of a glass rod to break the stem cleanly. The envelope can then be cut with a hot wire, either to extract the multiplier with its base or to seal the opened envelope to a vacuum chamber. To make connections to the multiplier when the envelope is sealed to a vacuum chamber, use socket FE2019. Open the envelope only in a clean, dry atmosphere, preferably dry nitrogen.
4. Environment. Oil vapour contaminates the dynodes and causes loss of gain; when evacuating the chamber in which the multiplier is to be used, use a pump fitted with a liquid nitrogen trap. Short exposure to clean, dry air does not harm the dynodes, but humidity does, prolonged storage should be in a dry, neutral atmosphere or in vacuum.
5. Gain is determined from the single-electron spectrum. With the multiplier connected via a charge amplifier to a multichannel analyser, a 1 A current is applied to the integral filament to heat it dull red; this results in an electron flux small enough to be counted one electron at a time. The centre of the corresponding pulse-amplitude distribution on the multichannel analyser is then taken as the multiplier gain, G, for single electrons.
6. When operating conditions are such that the cathode (first dynode) emits less than 1000 electrons per second ($< 1{,}6 \times 10^{-16}$ A), it is necessary to operate in the pulse mode; because of statistical fluctuations, direct-current measurements are not practical at so low a current.

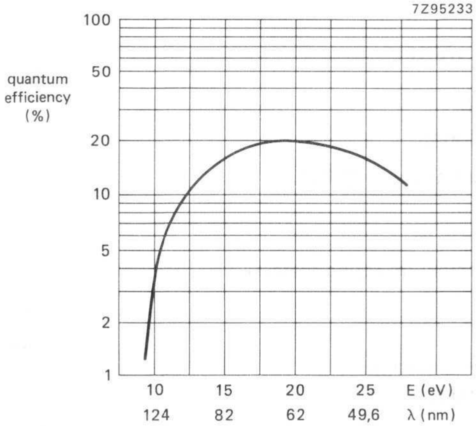

Fig. 2 Quantum efficiency of CuBe in the ultraviolet; E = energy, λ = wavelength.

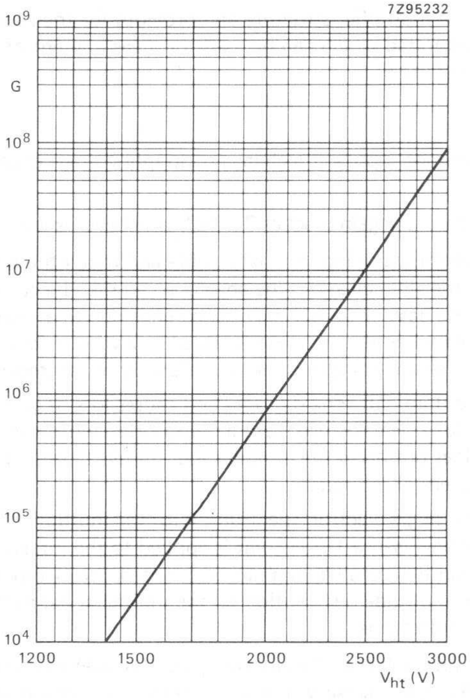

Fig. 3 Gain G as a function of supply voltage V_{ht}.

MECHANICAL DATA

Outlines (dimensions in mm)

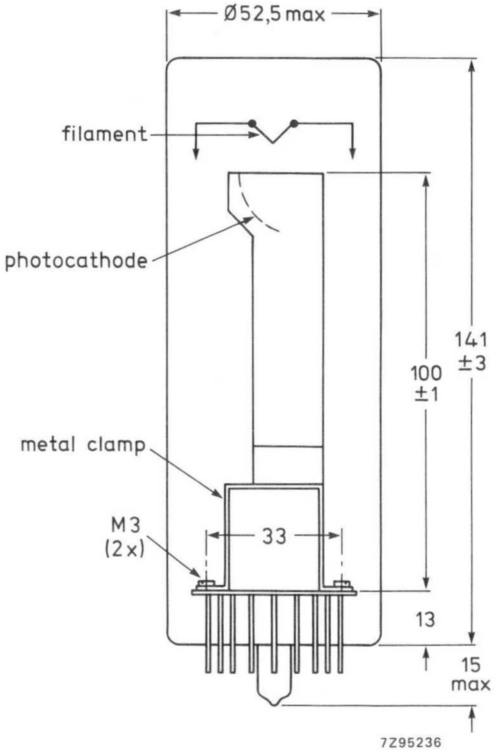

Fig. 4.

Base	19-pin all-glass
Net mass	30 g (multiplier without glass envelope)

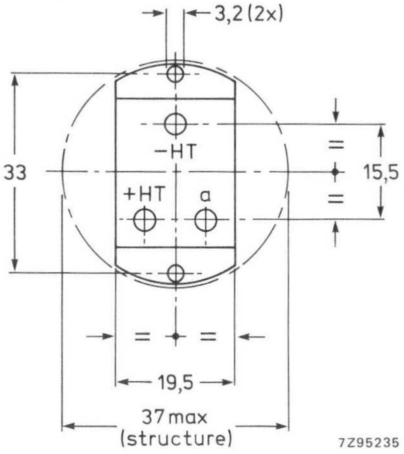

Bottom view of metal clamp.

DEVELOPMENT DATA

PIN CONNECTIONS

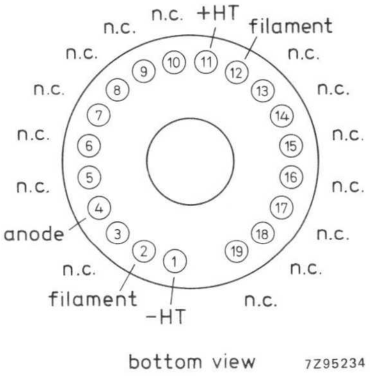

ACCESSORIES

Socket: type FE2019

SINGLE CHANNEL ELECTRON MULTIPLIERS

SURVEY OF TYPES

type no.	input configuration	dimensions (nom.) mm	resistance (typ.) Ω	page
B310AL/01	circular	ϕ 1,25	3,0 x 10^9	335
B310BL/01	circular	ϕ 1,25	3,0 x 10^9	335
B312AL/01	rectangular	2 x 8	3,0 x 10^9	337
B312BL/01	rectangular	2 x 8	3,0 x 10^9	337
B314AL/01	rectangular	2 x 8	3,0 x 10^9	339
B314BL/01	rectangular	2 x 8	3,0 x 10^9	339
B318AL/01	conical	ϕ 5	3,0 x 10^9	341
B318BL/01	conical	ϕ 5	3,0 x 10^9	341
B410AL/01	circular	ϕ 2,2	3,0 x 10^9	343
B410BL/01	circular	ϕ 2,2	3,0 x 10^9	343
B413AL	rectangular	3,5 x 15,5	3,0 x 10^9	345
B413BL/01	rectangular	3,5 x 15,5	3,0 x 10^9	345
B419AL/01	conical	ϕ 10	3,0 x 10^9	347
B419BL/01	conical	ϕ 10	3,0 x 10^9	347
X636AL,CL	elliptical	12,5 x 11,5	1,5 x 10^8	*
X645AL,CL	conical	ϕ 15	1,0 x 10^8	*
X646AL,CL	elliptical	12,5 x 11,5	1,0 x 10^8	349
X651	mounted X646		1,0 x 10^8	351
X710AL,BL	tubular	ϕ 2,2	3,0 x 10^8	353
X713AL,BL	rectangular	3,5 x 15,5	3,0 x 10^8	357
X714AL,BL	rectangular	3,5 x 15,5	3,0 x 10^8	361
X719AL,BL	conical	ϕ 10	3,0 x 10^8	365
X810AL,BL	circular	ϕ 1,25	7,0 x 10^8	369
X812AL,BL	rectangular	2 x 8	7,0 x 10^8	371
X814AL,BL	rectangular	2 x 8	7,0 x 10^8	373
X818AL,BL	conical	ϕ 5	7,0 x 10^8	375
X910AL,BL	circular	ϕ 2,2	6,0 x 10^8	377
X913AL,BL	rectangular	3,5 x 15,5	6,0 x 10^8	381
X914AL,BL	rectangular	3,5 x 15,5	6,0 x 10^8	385
X919AL,BL	conical	ϕ 10	6,0 x 10^8	389
X959AL,BL	conical	ϕ 15	6,0 x 10^8	393

* Details on request.

SINGLE CHANNEL ELECTRON MULTIPLIERS
GENERAL EXPLANATORY NOTES

PRINCIPLES OF OPERATION

A single channel electron multiplier is a small, curved, glass tube, the inside wall of which has a high surface resistance. If a potential is applied between the ends of the tube, the resistive surface becomes a continuous dynode, electrically analogous to the separate dynodes of a conventional photomultiplier together with the resistive chain used to establish the separate dynode potentials.

The channel electron multiplier operates in a vacuum. For space research, the environmental vacuum is sufficient. In the laboratory, the multiplier must be used in a vacuum chamber.

An electron entering the low-potential end of the channel multiplier generates secondary electrons on collision with the wall of the tube. These are accelerated along the tube until they strike the wall again, where they generate further secondary electrons. This avalanching process produces a large number of electrons at the positive end of the tube. This is illustrated in Fig. 1.

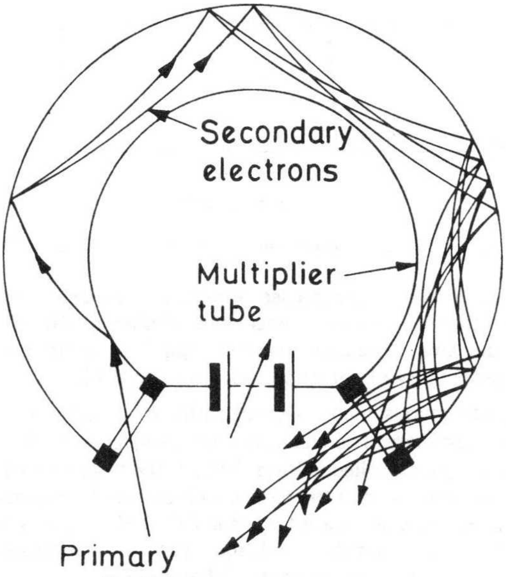

Fig. 1 Electron multiplication

A channel multiplier thus responds to an input of one electron by producing an output pulse of charge. This pulse may contain up to about 10^8 electrons and its duration (full width at half height) is about 10 nanoseconds. The amplitude of the resulting voltage pulse depends, of course, upon the values of resistance and capacitance in the anode circuit of the multiplier. The gain (Fig.2) is an exponential and very steep function of voltage for values below 10^7. Above 10^7, saturation effects are observed which are discussed later.

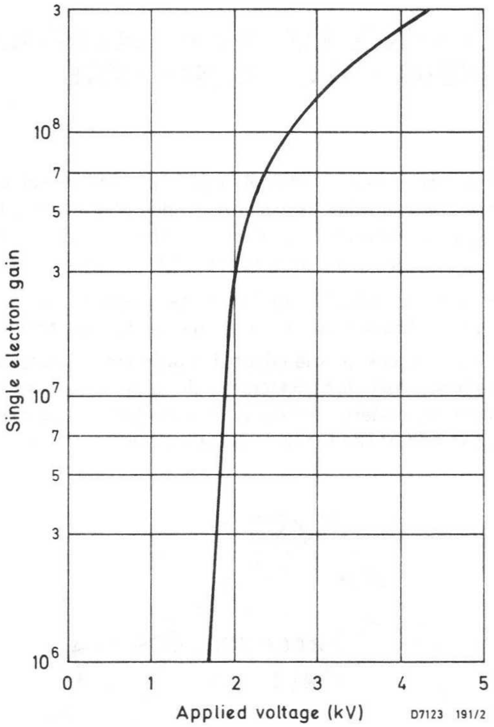

Fig.2 Typical variation of gain as a function of applied voltage

The multiplier will also respond to ions, β particles, X-rays, ultraviolet, or any other sufficiently energetic radiation. The detection efficiency of a channel multiplier is different for different forms and energies of excitation, but any particle or quantum capable of exciting an electron from the dynode surface has a finite probability of detection, (see Figs. 7 and 8).

Since the resistive coating is continuous, many electron paths are possible, and the number of stages of multiplication is thus indeterminate. The electron trajectories are scaled in proportion to the dimensions of the channel for a given applied voltage. Thus, if the length-to-diameter ratio is preserved, the same multiplication processes go on, and the same gain is achieved, irrespective of the absolute length of the channel. In practice, it is necessary for the length-to-diameter ratio to exceed about 30:1. Channels are almost invariably curved, and the gain is then less critically dependent on the length-to-diameter ratio. The ratios generally used are between 50:1 and 100:1.

IONIC FEEDBACK

The tube forming the channel multiplier is curved because the gain of a straight tube would be sensitive to changes in ambient pressure. When the first cloud of electrons nears the output end of the multiplier, it is sufficiently dense to ionise a considerable number of the residual gas atoms in the tube. These positive ions drift under the influence of the applied field towards the more negative potential at the input end of the channel.

If the channel is straight, the ions may acquire considerable energy before they collide with the wall of the tube. Consequently they may release from the wall electrons which initiate a further process of multiplication through the tube, resulting in a spurious output pulse. This process is repeated, and thus a sequence of 'after pulses' may be observed. This pulse train lasts typically for about a microsecond until the capacity of the channel is exhausted and the pulse train dies out.

In a curved tube, the ions strike the wall of the tube before they have acquired sufficient energy to release secondary electrons. Electron multiplication is unaffected however since electrons need acquire an energy of only about 50 eV to release secondary electrons from the wall. The output of the curved multiplier is therefore independent of the ambient pressure, provided it does not exceed 50 $mN.m^{-2}$ *. Above this pressure, spurious pulses occur, and effects similar to those seen with straight channels are observed.

SATURATION DUE TO SPACE CHARGE

One of the more significant aspects of the behaviour of a channel multiplier is the saturation effect caused by space-charge limitation. When the total amount of charge in the electron cloud in a channel multiplier reaches nearly 10^9 electrons, the gain cannot increase further.The space-charge repels the emitted-secondary electrons so that they strike the wall before acquiring sufficient energy from the field to make useful multiplying collisions. The space-charge limit is unaffected by the channel diameter. Increasing the applied voltage increases the amplitude of those pulses which would not otherwise have reached $\approx 10^9$ electrons, but as the maximum charge output cannot exceed this level, the amplitude of all pulses tends to the same value. The multiplier thus has a narrow pulse-height distribution. When it is operated in the saturated mode, it is analogous to a Geiger counter, producing a pulse of a given amplitude irrespective of the manner of its excitation. It is unable in this condition to give information about the number of particles simultaneously striking the input or about their energy.

When the multiplier is not operated in its saturated mode, that is when the gain is less than 10^7, there is some proportionality between input and output. However, there is a spread of pulse amplitudes because of the many possible electron paths through the multiplier. The pulse-amplitude distribution is exponential: smaller pulses are more probable then larger ones by an amount exponentially dependent on the amplitude.

SATURATION DUE TO FIELD DISTORTION

In a straight channel, ionic feedback gives rise to a pulse train about 1 microsecond in duration which may contain a total charge of more than 10^9 electrons. The pulse train dies out only when the field inside the channel is distorted by wall-charging to such an extent that the multiplication process can no longer sustain feedback.

The field is restored during a 'dead time', after which an output pulse can again be observed. The dead time depends on the resistance of the channel and may be some tens of microseconds.

The dead-time effect may be caused by a single event in a straight channel. This is not possible, however, in curved channels because the probability of ionic feedback is very low, and the pulse train is replaced by a single pulse of about 10 nanoseconds duration which is space-charge limited to about 10^9 electrons. Consequently, the curved channel may produce two pulses of the same amplitude separated in time only by the pulse duration. However, if the mean pulse repetition rate is high, the field inside the channel is distorted. A state of dynamic equilibrium is achieved: the mean gain is reduced so that the average rate of flow of charge in the output pulses is less than the current flowing in the channel wall.

The same considerations apply when a channel multiplier is used as a current amplifier. The amplification is generally linear up to a maximum of 10% of the standing (wall) current. For example, a channel of resistance $5.10^8 \Omega$ operated at 2.5 kV should maintain a linear current-transfer characteristic up to a maximum output of 0.5 μA.

RESISTANCE

The resistance of a channel electron multiplier is measured between input and output terminals at atmospheric pressure i.e. at room temperature with no space current flow.

---

*50 mPa or 5.10^{-4} mbar

BACKGROUND OR SPONTANEOUS PULSE COUNTING RATE

The background or spontaneous pulse counting rate is the number of pulses detected per second above a specified equivalent threshold when the input end of the multiplier is closed. The equivalent threshold is the amount of charge produced by the multiplier which, when amplified, just appears above the threshold of the discriminator used for pulse counting. The count is made with a multiplier voltage and equivalent threshold as specified in the data.

STARTING VOLTAGE

As the voltage applied to the channel is increased, the gain rises and the output pulses become larger. The pulses are not all the same size, but as the gain increases, more of them exceed the equivalent threshold. The process continues until all the pulses are above the threshold. The observed counting rate is shown as a function of voltage in Fig.3 and this graph shows a steeply rising portion followed by a plateau.

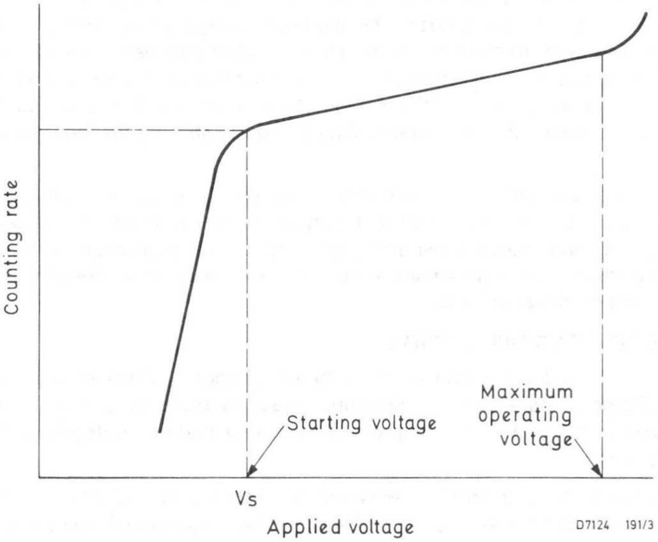

Fig.3 Definition of starting voltage

The starting voltage is the voltage at which the pulse counting rate is 90% of the plateau counting rate, where the plateau is defined as the region over which the counting rate changes by less than 3% for each 100 V increment.

The starting voltage is measured using an input source adjusted to give a fixed counting rate at a high applied voltage. The counting rate and voltage, together with the equivalent threshold, are given in the data.

PULSE GAIN

The output pulses resulting from input particles or quanta (events) will show a statistical spread. Due to saturation effects in the multiplier this spread is approximately Gaussian and the gain is defined as its median value.

The resistance of the multiplier glass limits the counting rate below which the gain is constant, (see Fig.10).

OUTPUT

The output pulse corresponding to one input electron will consist of G electrons. The corresponding charge in the output pulse will thus be G x 1.6×10^{-19} coulombs, where 1.6×10^{-19} coulombs is the electron charge. The charge in the output pulse raises the potential across the input capacitance of a pulse amplifier and this voltage change is referred to as the pulse height (usually in millivolts).

This expression of output as a voltage is common practice, but the capacitance to be charged must also be known.

When a channel multiplier is used for direct current amplification, the output current must be collected at a separate electrode. If it is used for pulse counting, the output can be detected at the positive terminal of the multiplier; in this case, the multiplier is a two-terminal device, (Figs.5 and 6).

PULSE HEIGHT DISTRIBUTION

The nominal gain of a channel multiplier will not be achieved every time an event produces an output pulse; there is a variation in gain because of the statistical nature of the multiplication process. However, the spread is not usually very great at high values of gain and it is expressed in terms of the resolution of the pulse height distribution.

A typical pulse distribution is given in Fig.4. This is seen to be Gaussian. The resolution is defined as the ratio of the full width of the distribution at half maximum frequency (F.W.H.M.) to the modal pulse height. The resolution depends on applied voltage and gain. Values for various multipliers are quoted in the data.

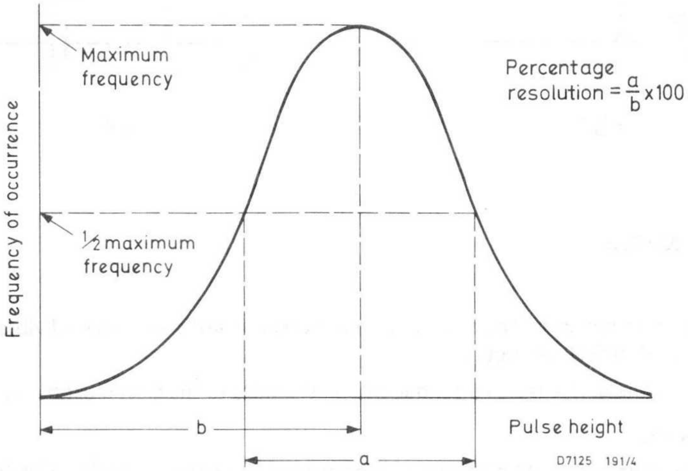

Fig.4 Definition of resolution of pulse height distribution

INPUT APERTURE

Larger input apertures may be achieved without increasing the overall dimensions of the multiplier by fitting a cone-shaped or flared end. Because the response of a channel multiplier depends on the angle of incidence of the input flux, it is not practicable to quote dimensions of effective apertures which are valid in all situations. The effective aperture of standard multipliers is not necessarily the same as the geometric aperture, but may be smaller.

MODE OF OPERATION

The multiplier is most commonly used with pulse counting ciruicts to detect individual particles or quanta. For this application closed end multipliers are recommended. A typical circuit is shown in Fig.5. The output pulse is capacitively coupled into a suitable charge sensitive pulse amplifier and discriminator. Under certain circumstances the multiplier may be used as a current amplifier. In this case an open-ended multiplier is necessary, the output being collected at a separate electrode as shown in Fig.6. The collector electrode should be biased positively to ensure collection of all output electrons.

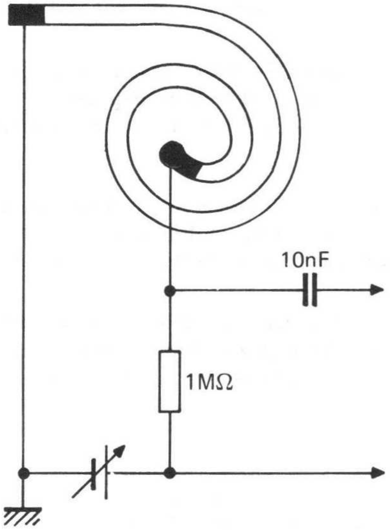

Fig.5

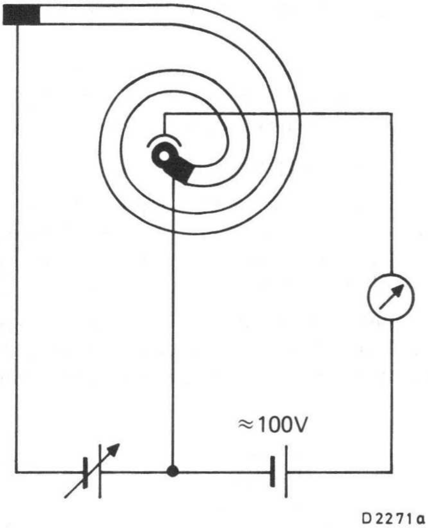

Fig.6

OPERATIONAL NOTES

Mounting

It is recommended that the leads are not used for mounting the device as sustained vibration may result in fracture of electrical connections.

The outer surface of the device is also a conductor and supports to the glass must be insulated.

Vacuum environment

Normal vacuum precautions must be observed. In particular, gross contamination with hydrocarbon vapours will cause rapid loss of gain and should be avoided.

The device is stable in dry air and may be vacuum cycled repeatedly without damage. If it has to be stored at atmospheric pressure it is advisable to use a desiccator as high humidity can cause loss of gain.

Baking conditions

The specified baking conditions apply only when the device is under vacuum. The temperature must not exceed that specified in the data. A voltage must not be applied to the device during bake-out.

Thermal stability

Due to the negative temperature coefficient of resistance of multipliers, thermal runaway is possible. Operation below the maximum voltage and temperature limits specified will ensure that this does not occur.

Choice of operating voltage

Use of an operating voltage approximately 500 volts greater than the starting voltage should ensure that all output pulses exceed the threshold. If, as a result of prolonged use, the median gain of the multiplier falls, the operating voltage may be increased in order to restore the gain to its original value.

To avoid contamination, these devices must be handled only with gloved hands or tweezers.

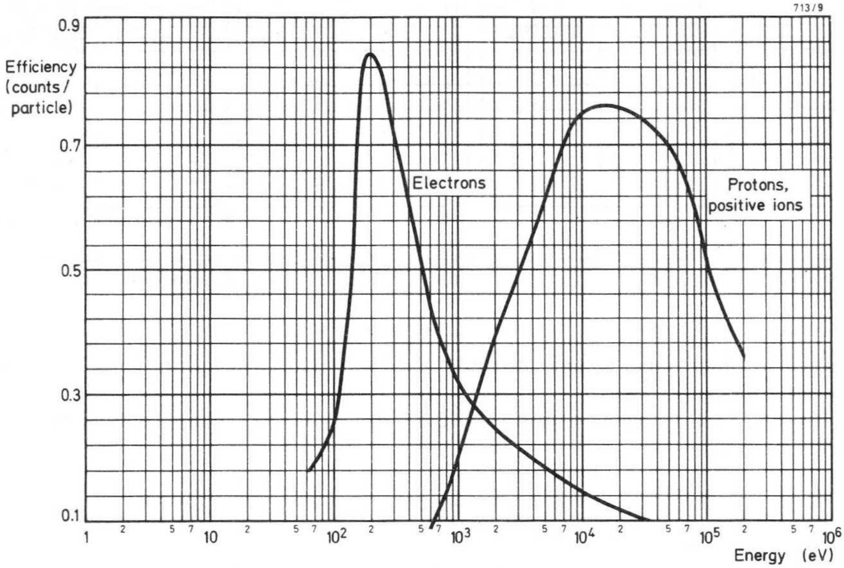

Fig.7 Typical detection efficiencies for electrons, protons and positive ions

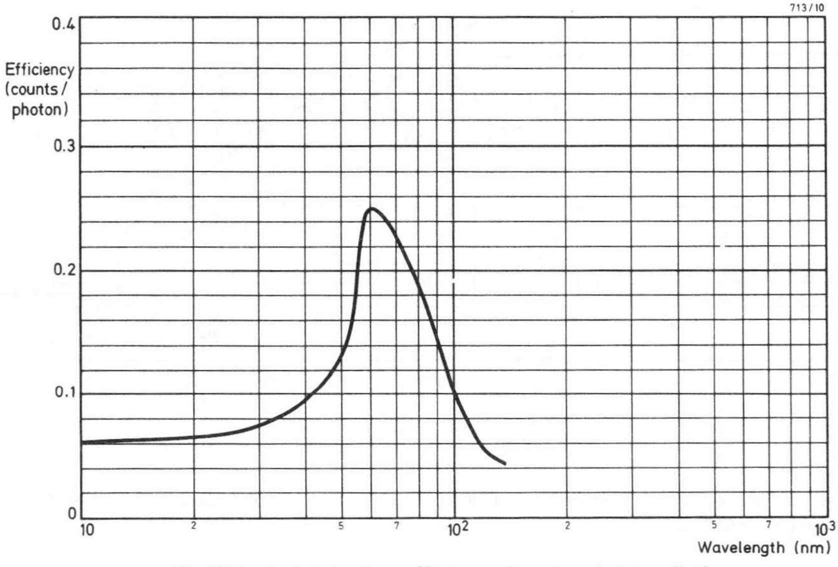

Fig.8 Typical detection efficiency for ultraviolet radiation

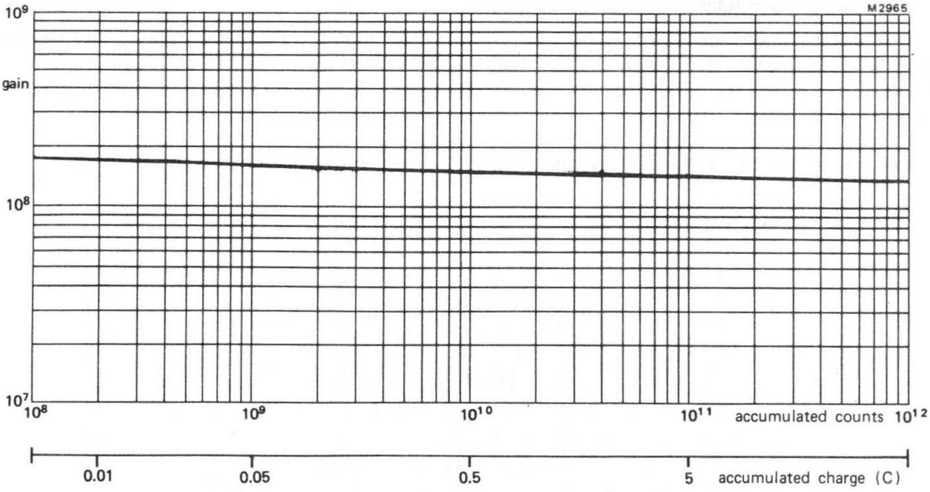

Fig.9 Typical gain as a function of accumulated counts and accumulated charge for the X900 series of single channel electron multipliers.
Operating voltage = 2.8 kV, ambient pressure = 0.013 mN.m^{-2} (1.3 x 10^{-7} mbar), counting rate = 10^4 count/s, source: electrons.

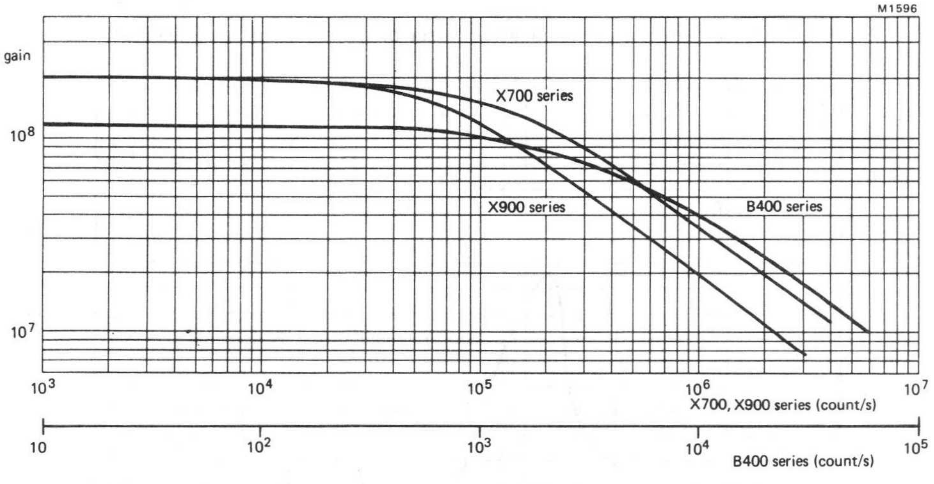

Fig.10 Typical gain as a function of counting rate for single channel electron multipliers.
Operating voltage = 2.5 kV.

SINGLE CHANNEL ELECTRON MULTIPLIERS

Single channel electron multipliers in the form of a glass planar spiral tube.
The B310AL/01 has an open-ended output. To ensure efficient collection of electrons, a collector should be used, biased at 100 to 200 V positive with respect to the multiplier output.
The B310BL/01 has a closed output.

QUICK REFERENCE DATA

Typical gain at 3.0 kV		1.2×10^8	
Typical resistance		3.0×10^9	Ω
Operating voltage	max.	4.0	kV

Unless otherwise stated, data is applicable to both types.
This data should be read in conjunction with GENERAL EXPLANATORY NOTES – SINGLE CHANNEL ELECTRON MULTIPLIERS.

CHARACTERISTICS (measured at 3.0 kV and 1000 pulse/s where applicable)

	Min.	Typ.	Max.	
Resistance	2.0	3.0	5.0	$\times 10^9$ Ω
Gain (note 1)	0.8	1.2	–	$\times 10^8$
Background above an equivalent threshold of 2.0×10^7 electrons	–	0.03	0.20	pulse/s
Starting voltage with an equivalent threshold of 2.0×10^7 electrons	2.0	2.5	2.6	kV
Resolution (F.W.H.M.) at a modal gain of 1.0×10^8	–	50	70	%
Effective input diameter	1.1	1.25	–	mm

RATINGS

Limiting values in accordance with the Absolute Maximum System (IEC 134)

Operating voltage	max.	4.0	kV
Temperature, operating and storage	max.	70	°C
Bake temperature in vacuo (note 2)	max.	400	°C
Ambient pressure with high voltage applied	max.	50	$\mathrm{mN.m^{-2}}$

MASS 1.0 g

MOUNTING POSITION

Any. In environments where vibration may be encountered, the device must not be supported by the leads alone.

NOTES

1. The gain of a typical multiplier will increase by a factor of approx. 2 for an increase of operating voltage of 500 V.
2. Baking will cause a permanent slight loss of gain and it is advisable to keep the baking time to a minimum, for example, baking for 16 hours at 400 °C could reduce the gain by approximately a factor of 2.

MECHANICAL DATA

Dimensions in mm

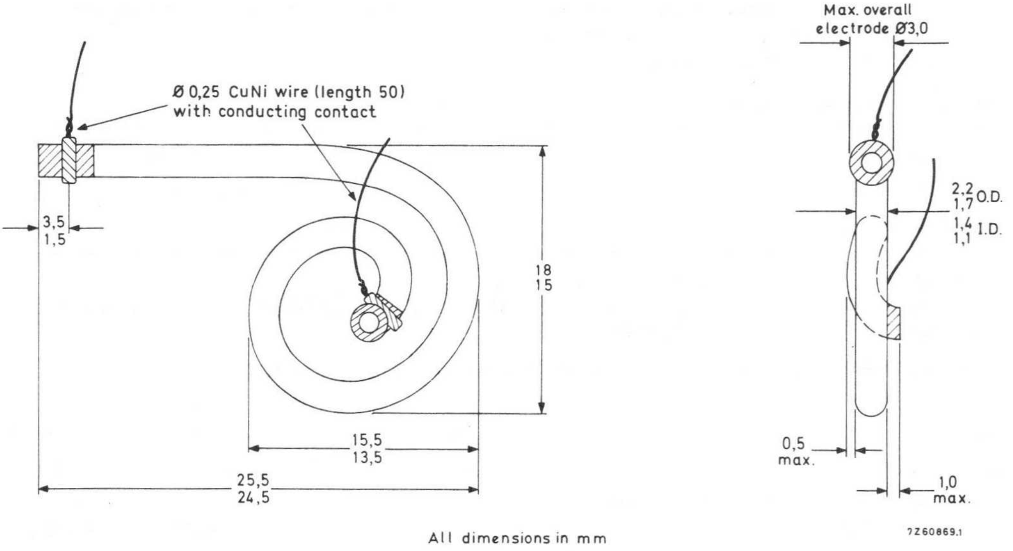

SINGLE CHANNEL ELECTRON MULTIPLIERS

Single channel electron multipliers in the form of a glass planar spiral tube with a rectangular section input cone 2.0 x 8.0 mm.
The B312AL/01 has an open-ended output. To ensure efficient collection of electrons, a collector should be used, biased at 100 to 200 V positive with respect to the multiplier output.
The B312BL/01 has a closed output.

QUICK REFERENCE DATA

Typical gain at 3.0 kV		1.2×10^8	
Typical resistance		3.0×10^9	Ω
Operating voltage	max.	4.0	kV

Unless otherwise stated, data is applicable to both types.
This data should be read in conjunction with GENERAL EXPLANATORY NOTES – SINGLE CHANNEL ELECTRON MULTIPLIERS.

CHARACTERISTICS (measured at 3.0 kV and 1000 pulse/s where applicable)

	Min.	Typ.	Max.	
Resistance	2.0	3.0	5.0	$\times 10^9$ Ω
Gain (note 1)	0.8	1.2	–	$\times 10^8$
Background above an equivalent threshold of 2.0×10^7 electrons	–	0.03	0.20	pulse/s
Starting voltage with an equivalent threshold of 2.0×10^7 electrons	2.0	2.5	2.6	kV
Resolution (F.W.H.M.) at a modal gain of 1.0×10^8	–	50	70	%
Effective input aperture	1.5 x 7.5	2.0 x 8.0	–	mm ←

RATINGS

Limiting values in accordance with the Absolute Maximum System (IEC 134)

Operating voltage	max.	4.0	kV
Temperature, operating and storage	max.	70	°C
Bake temperature in vacuo (note 2)	max.	400	°C
Ambient pressure with high voltage applied	max.	50	$\mathrm{mN.m^{-2}}$

MASS

1.0 g

MOUNTING POSITION

Any. In environments where vibration may be encountered, the device must not be supported by the leads alone.

NOTES

1. The gain of a typical multiplier will increase by a factor of approx. 2 for an increase of operating voltage of 500 V.
2. Baking will cause a permanent slight loss of gain and it is advisable to keep the baking time to a minimum, for example, baking for 16 hours at 400 °C could reduce the gain by approximately a factor of 2.

MECHANICAL DATA

Dimensions in mm

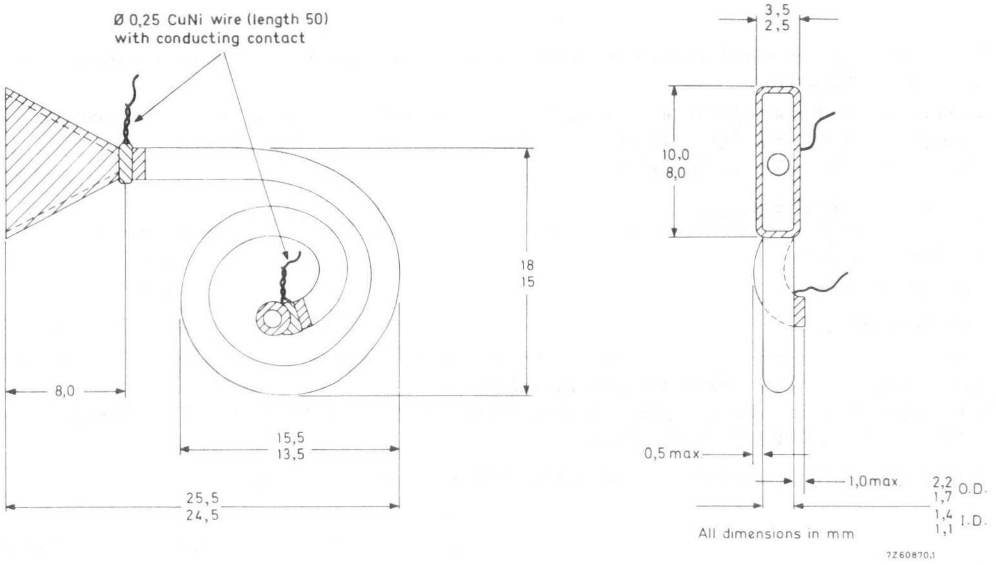

SINGLE CHANNEL ELECTRON MULTIPLIERS

Single channel electron multipliers in the form of a glass planar spiral tube with a rectangular section input cone 2.0 x 8.0 mm.
The B314AL/01 has an open-ended output. To ensure efficient collection of electrons, a collector should be used, biased at 100 to 200 V positive with respect to the multiplier output.
The B314BL/01 has a closed output.

QUICK REFERENCE DATA

Typical gain at 3.0 kV		1.2×10^8	
Typical resistance		3.0×10^9	Ω
Operating voltage	max.	4.0	kV

Unless otherwise stated, data is applicable to both types.
This data should be read in conjunction with GENERAL EXPLANATORY NOTES – SINGLE CHANNEL ELECTRON MULTIPLIERS.

CHARACTERISTICS (measured at 3.0 kV and 1000 pulse/s where applicable)

	Min.	Typ.	Max.	
Resistance	2.0	3.0	5.0	$\times 10^9$ Ω
Gain (note 1)	0.8	1.2	–	$\times 10^8$
Background above an equivalent threshold of 2.0×10^7 electrons	–	0.03	0.20	pulse/s
Starting voltage with an equivalent threshold of 2.0×10^7 electrons	2.0	2.5	2.6	kV
Resolution (F.W.H.M.) at a modal gain of 1.0×10^8	–	50	70	%
Effective input aperture	1.5 x 7.5	2.0 x 8.0	–	mm ←

RATINGS

Limiting values in accordance with the Absolute Maximum System (IEC 134)

Operating voltage	max.	4.0	kV
Temperature, operating and storage	max.	70	°C
Bake temperature in vacuo (note 2)	max.	400	°C
Ambient pressure with high voltage applied	max.	50	$mN.m^{-2}$

MASS	1.0	g

MOUNTING POSITION

Any. In environments where vibration may be encountered, the device must not be supported by the leads alone.

NOTES

1. The gain of a typical multiplier will increase by a factor of approx. 2 for an increase of operating voltage of 500 V.
2. Baking will cause a permanent slight loss of gain and it is advisable to keep the baking time to a minimum, for example, baking for 16 hours at 400 °C could reduce the gain by approximately a factor of 2.

MECHANICAL DATA

Dimensions in mm

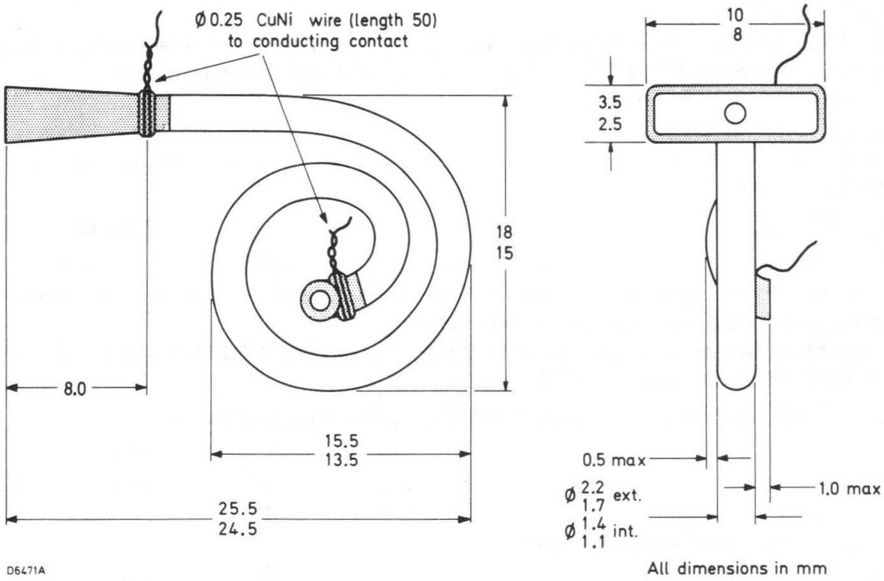

SINGLE CHANNEL ELECTRON MULTIPLIERS

Single channel electron multipliers in the form of a glass planar spiral tube with a 5.0 mm diameter input cone.
The B318AL/01 has an open-ended output. To ensure efficient collection of electrons, a collector should be used, biased at 100 to 200 V positive with respect to the multiplier output.
The B318BL/01 has a closed output.

QUICK REFERENCE DATA

Typical gain at 3.0 kV		1.2×10^8	
Typical resistance		3.0×10^9	Ω
Operating voltage	max.	4.0	kV

Unless otherwise stated, data is applicable to both types.
This data should be read in conjunction with GENERAL EXPLANATORY NOTES – SINGLE CHANNEL ELECTRON MULTIPLIERS.

CHARACTERISTICS (measured at 3.0 kV and 1000 pulse/s where applicable)

	Min.	Typ.	Max.	
Resistance	2.0	3.0	5.0	$\times 10^9$ Ω
Gain (note 1)	0.8	1.2	–	$\times 10^8$
Background above an equivalent threshold of 2.0×10^7 electrons	–	0.03	0.20	pulse/s
Starting voltage with an equivalent threshold of 2.0×10^7 electrons	2.0	2.5	2.6	kV
Resolution (F.W.H.M.) at a modal gain of 1.0×10^8	–	50	70	%
Effective input diameter	4.0	5.0	–	mm

RATINGS

Limiting values in accordance with the Absolute Maximum System (IEC 134)

Operating voltage	max.	4.0	kV
Temperature, operating and storage	max.	70	°C
Bake temperature in vacuo (note 2)	max.	400	°C
Ambient pressure with high voltage applied	max.	50	$mN.m^{-2}$

MASS

1.0 g

MOUNTING POSITION

Any. In environments where vibration may be encountered, the device must not be supported by the leads alone.

NOTES

1. The gain of a typical multiplier will increase by a factor of approx. 2 for an increase of operating voltage of 500 V.
2. Baking will cause a permanent slight loss of gain and it is advisable to keep the baking time to a minimum, for example, baking for 16 hours at 400 °C could reduce the gain by approximately a factor of 2.

MECHANICAL DATA

Dimensions in mm

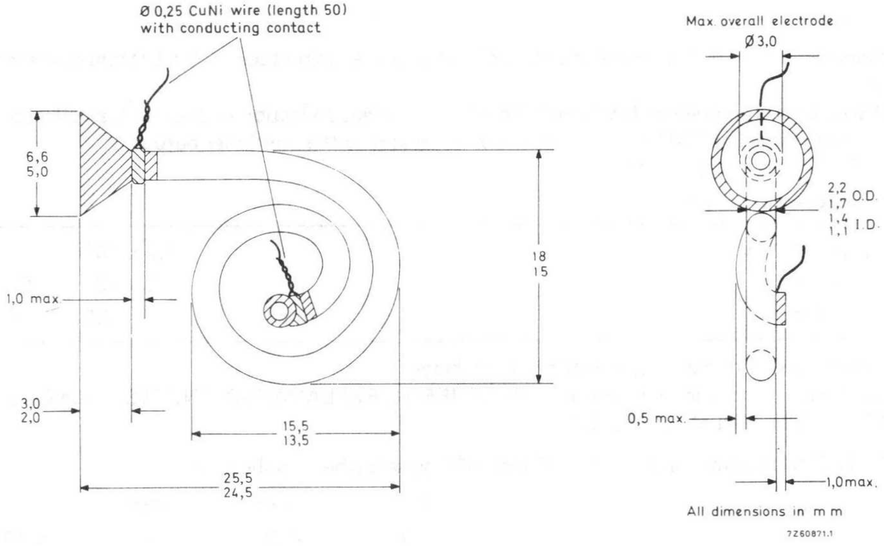

SINGLE CHANNEL ELECTRON MULTIPLIERS

Single channel electron multipliers in the form of a glass planar spiral tube.
The B410AL/01 has an open-ended output. To ensure efficient collection of electrons, a collector should be used, biased at 100 to 200 V positive with respect to the multiplier output.
The B410BL/01 has a closed output.

QUICK REFERENCE DATA

Typical gain at 2.5 kV		1.2×10^8	
Typical resistance		3.0×10^9	Ω
Operating voltage	max.	3.5	kV

Unless otherwise stated, data is applicable to both types.
This data should be read in conjunction with GENERAL EXPLANATORY NOTES – SINGLE CHANNEL ELECTRON MULTIPLIERS.

CHARACTERISTICS (measured at 2.5 kV and 1000 pulse/s where applicable)

	Min.	Typ.	Max.	
Resistance	2.0	3.0	5.0	$\times 10^9$ Ω
Gain (note 1)	0.8	1.2	–	$\times 10^8$
Background above an equivalent threshold of 2.0×10^7 electrons	–	0.03	0.20	pulse/s
Starting voltage with an equivalent threshold of 2.0×10^7 electrons	1.7	2.0	2.2	kV
Resolution (F.W.H.M.) at a modal gain of 1.0×10^8	–	50	70	%
Effective input diameter	2.0	2.2	–	mm

RATINGS

Limiting values in accordance with the Absolute Maximum System (IEC 134)

Operating voltage	max.	3.5	kV
Temperature operating and storage	max.	70	°C
Bake temperature in vacuo (note 2)	max.	400	°C
Ambient pressure with high voltage applied	max.	50	$\mathrm{mN.m^{-2}}$

MASS 3.0 g

MOUNTING POSITION

Any. In environments where vibration may be encountered, the device must not be supported by the leads alone.

NOTES

1. The gain of a typical multiplier will increase by a factor of approx. 2 for an increase of operating voltage of 500 V.
2. Baking will cause a permanent slight loss of gain and it is advisable to keep the baking time to a minimum, for example, baking for 16 hours at 400 °C could reduce the gain by approximately a factor of 2.

MECHANICAL DATA

Dimensions in mm

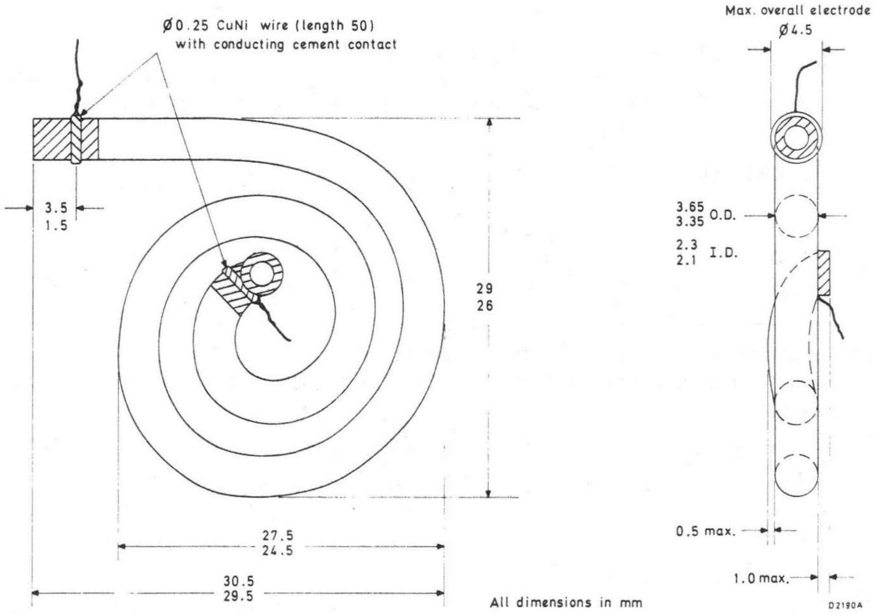

SINGLE CHANNEL ELECTRON MULTIPLIERS

Single channel electron multipliers in the form of a glass planar spiral tube with a rectangular section input cone 3.5 x 15.5 mm.
The B413AL/01 has an open-ended output. To ensure efficient collection of electrons, a collector should be used, biased at 100 to 200 V positive with respect to the multiplier output.
The B413BL/01 has a closed output.

QUICK REFERENCE DATA

Typical gain at 2.5 kV		1.2×10^8	
Typical resistance		3.0×10^9	Ω
Operating voltage	max.	3.5	kV

Unless otherwise stated, data is applicable to both types.
This data should be read in conjunction with GENERAL EXPLANATORY NOTES – SINGLE CHANNEL ELECTRON MULTIPLIERS.

CHARACTERISTICS (measured at 2.5 kV and 1000 pulse/s where applicable)

	Min.	Typ.	Max.	
Resistance	2.0	3.0	5.0	$\times 10^9$ Ω
Gain (note 1)	0.8	1.2	–	$\times 10^8$
Background above an equivalent threshold of 2.0×10^7 electrons	–	0.03	0.20	pulse/s
Starting voltage with an equivalent threshold of 2.0×10^7 electrons	1.7	2.0	2.2	kV
Resolution (F.W.H.M.) at a modal gain of 1.0×10^8	–	50	70	%
Effective input aperture	3.0 x 14.5	3.5 x 15.5	–	mm

RATINGS

Limiting values in accordance with the Absolute Maximum System (IEC 134)

Operating voltage	max.	3.5	kV
Temperature operating and storage	max.	70	°C
Bake temperature in vacuo (note 2)	max.	400	°C
Ambient pressure with high voltage applied	max.	50	$mN.m^{-2}$
MASS		4.0	g

MOUNTING POSITION

Any. In environments where vibration may be encountered, the device must not be supported by the leads alone.

NOTES

1. The gain of a typical multiplier will increase by a factor of approx. 2 for an increase of operating voltage of 500 V.
2. Baking will cause a permanent slight loss of gain and it is advisable to keep the baking time to a minimum, for example, baking for 16 hours at 400 °C could reduce the gain by approximately a factor of 2.

MECHANICAL DATA

Dimensions in mm

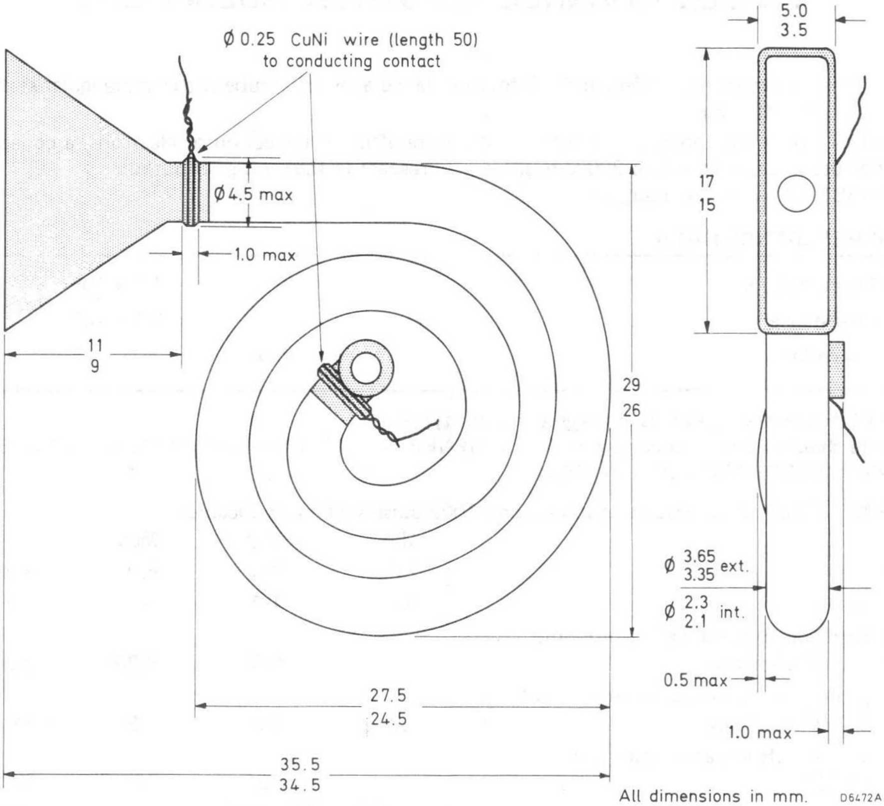

SINGLE CHANNEL ELECTRON MULTIPLIERS

Single channel electron multipliers in the form of a glass planar spiral tube with a 10 mm diameter input cone.

The B419AL/01 has an open-ended output. To ensure efficient collection of electrons, a collector should be used, biased at 100 to 200 V positive with respect to the multiplier output.

The B419BL/01 has a closed output.

QUICK REFERENCE DATA

Typical gain at 2.5 kV		1.2×10^8	
Typical resistance		3.0×10^9	Ω
Operating voltage	max.	3.5	kV

Unless otherwise stated, data is applicable to both types.

This data should be read in conjunction with GENERAL EXPLANATORY NOTES – SINGLE CHANNEL ELECTRON MULTIPLIERS.

CHARACTERISTICS (measured at 2.5 kV and 1000 pulse/s where applicable)

	Min.	Typ.	Max.	
Resistance	2.0	3.0	5.0	$\times 10^8$ Ω
Gain (note 1)	0.8	1.2	–	$\times 10^8$
Background above an equivalent threshold of 2.0×10^7 electrons	–	0.03	0.20	pulse/s
Starting voltage with an equivalent threshold of 2.0×10^7 electrons	1.7	2.0	2.2	kV
Resolution (F.W.H.M.) at a modal gain of 1.0×10^8	–	50	70	%
Effective input diameter	9.0	10	–	mm

RATINGS

Limiting values in accordance with the Absolute Maximum System (IEC 134)

Operating voltage	max.	3.5	kV
Temperature operating and storage	max.	70	°C
Bake temperature in vacuo (note 2)	max.	400	°C
Ambient pressure with high voltage applied	max.	50	$\mathrm{mN.m^{-2}}$
MASS		4.0	g

MOUNTING POSITION

Any. In environments where vibration may be encountered, the device must not be supported by the leads alone.

NOTES

1. The gain of a typical multiplier will increase by a factor of approx. 2 for an increase of operating voltage of 500 V.
2. Baking will cause a permanent slight loss of gain and it is advisable to keep the baking time to a minimum, for example, baking for 16 hours at 400 °C could reduce the gain by approximately a factor of 2.

MECHANICAL DATA

Dimensions in mm

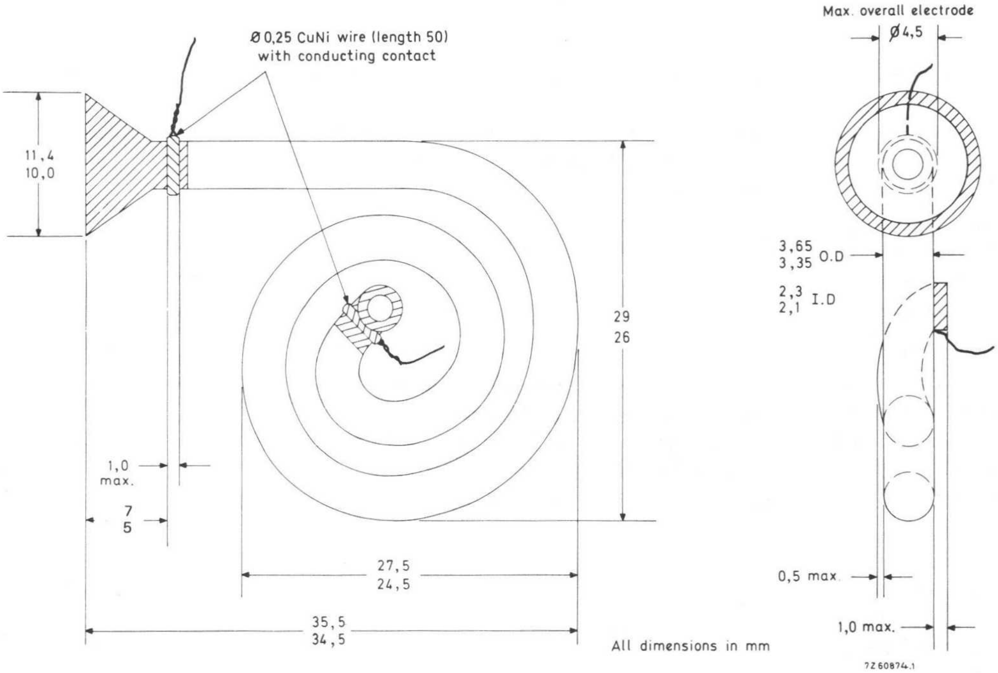

SINGLE CHANNEL ELECTRON MULTIPLIERS

The X646AL is a high current single channel electron multiplier designed mainly for use in mass spectrometers in the analogue mode.
It has an open-ended output and to ensure efficient collection of electrons a collector should be used, biased approximately 100 V positive with respect to the multiplier output. This bias can be provided by means of the resistive layer on the outside wall of the multiplier (see Mechanical Data).
The X646CL is identical but is supplied with a collector assembly and stainless steel strips for the h.t. and earth connections.

QUICK REFERENCE DATA

Typical gain at 2.0 kV		1.0×10^6	
Typical resistance		1.0×10^8	Ω
Operating voltage	max.	3.0	kV
Output current (continuous)	max.	5	μA
Output current for linear gain	max.	3	μA

RATINGS

Temperature (operating and storage)	max.	70	^{o}C
Bake temperature in vacuo	max.	400	^{o}C
Ambient pressure with high voltage applied	max.	50	mN.m^{-2}

Note: Baking will cause a permanent slight loss of gain and it is advisable to keep the baking time to a minimum, for example, baking for 16 hours at 400 ^{o}C could reduce the gain by approximately a factor of 2.

MECHANICAL DATA X646AL

Dimensions in mm

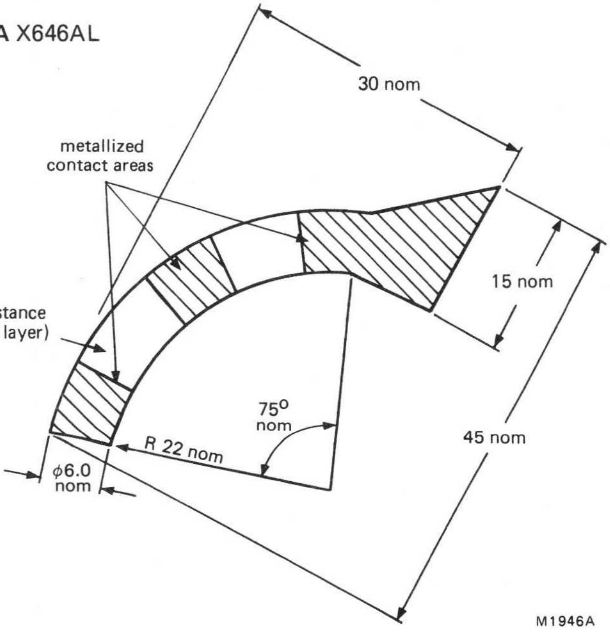

MECHANICAL DATA X646CL

Dimensions in mm

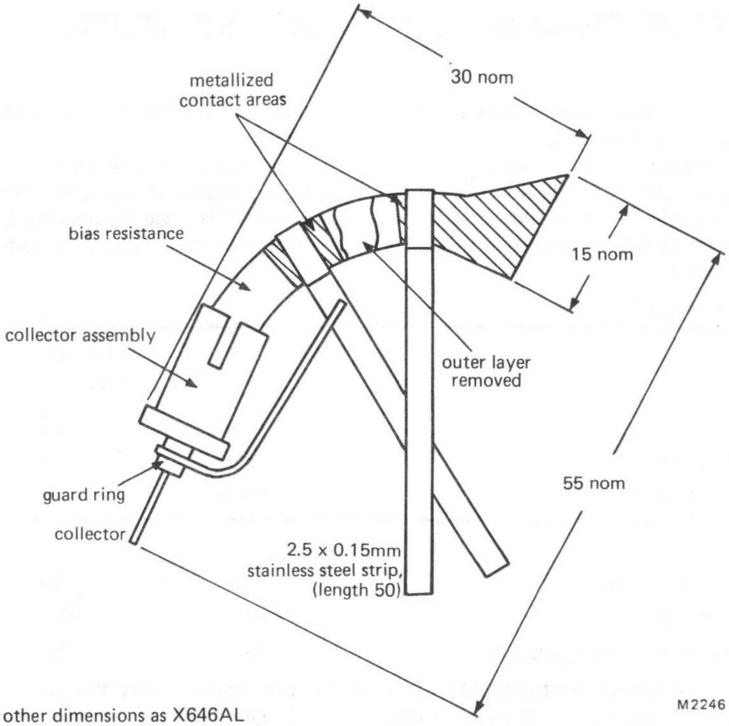

other dimensions as X646AL

SINGLE CHANNEL ELECTRON MULTIPLIER

The X651 is a mounted version of the X646 high current single channel electron multiplier designed mainly for use in mass spectrometers in the analogue mode. It incorporates a Faraday Cup connected to the collector.

QUICK REFERENCE DATA

Typical gain at 2.0 kV		1.0×10^6	
Typical resistance		1.0×10^8	Ω
Operating voltage	max.	3.0	kV
Output current (continuous for 10 minutes)	max.	10	μA
Output current (continuous)	max.	5	μA
Output current for linear gain	max.	3	μA

RATINGS

Temperature (operating and storage)	max.	70	°C
Bake temperature in vacuo	max.	400	°C
Ambient pressure with high voltage applied	max.	50	$\mathrm{mN.m^{-2}}$

Note: Baking will cause a permanent slight loss of gain and it is advisable to keep the baking time to a minimum, for example, baking for 16 hours at 400 °C could reduce the gain by approximately a factor of 2.

MECHANICAL DATA

Dimensions in mm

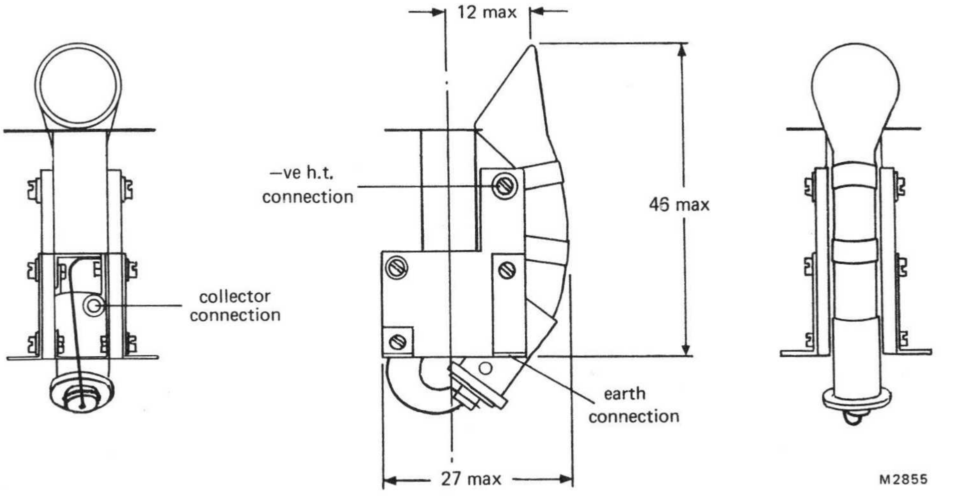

SINGLE CHANNEL ELECTRON MULTIPLIERS

Single channel electron multipliers in the form of a glass planar spiral tube.
The X710AL has an open-ended output. To ensure efficient collection of electrons, a collector should be used, biased at 100 to 200 V positive with respect to the multiplier output.
The X710BL has a closed output.

QUICK REFERENCE DATA

Typical gain at 2.5 kV		1.5×10^8	
Typical resistance		3.0×10^8	Ω
Operating voltage	max.	3.5	kV

Unless otherwise stated, data is applicable to both types.
This data should be read in conjunction with GENERAL EXPLANATORY NOTES – SINGLE CHANNEL ELECTRON MULTIPLIERS

CHARACTERISTICS (measured at 2.5 kV and 10 000 pulse/s where applicable)

	Min.	Typ.	Max.	
Resistance	2.0	3.0	4.0	$\times 10^8$ Ω
Gain (note 1)	1.0	1.5	–	$\times 10^8$
Background above an equivalent threshold of 2.0×10^6 electrons	–	0.05	0.20	pulse/s
Starting voltage with an equivalent threshold of 2.0×10^6 electrons	1.4	1.6	1.8	kV
Resolution (F.W.H.M.) at a modal gain of 1.8×10^8	–	50	70	%
Effective input diameter	2.0	2.2	–	mm

RATINGS

Limiting values in accordance with the Absolute Maximum System (IEC 134)

Operating voltage	max.	3.5	kV
Temperature operating and storage	max.	70	°C
Bake temperature in vacuo (note 2)	max.	400	°C
Ambient pressure with high voltage applied	max.	50	$mN.m^{-2}$

MASS 4.0 g

MOUNTING POSITION

Any. In environments where vibration may be encountered, the device must not be supported by the leads alone.

NOTES

1. The gain of a typical multiplier will increase by a factor of approx. 2 for an increase of operating voltage of 500 V.
2. Baking will cause a permanent slight loss of gain and it is advisable to keep the baking time to a minimum, for example, baking for 16 hours at 400 °C could reduce the gain by approximately a factor of 2.

MECHANICAL DATA X710AL

Dimensions in mm

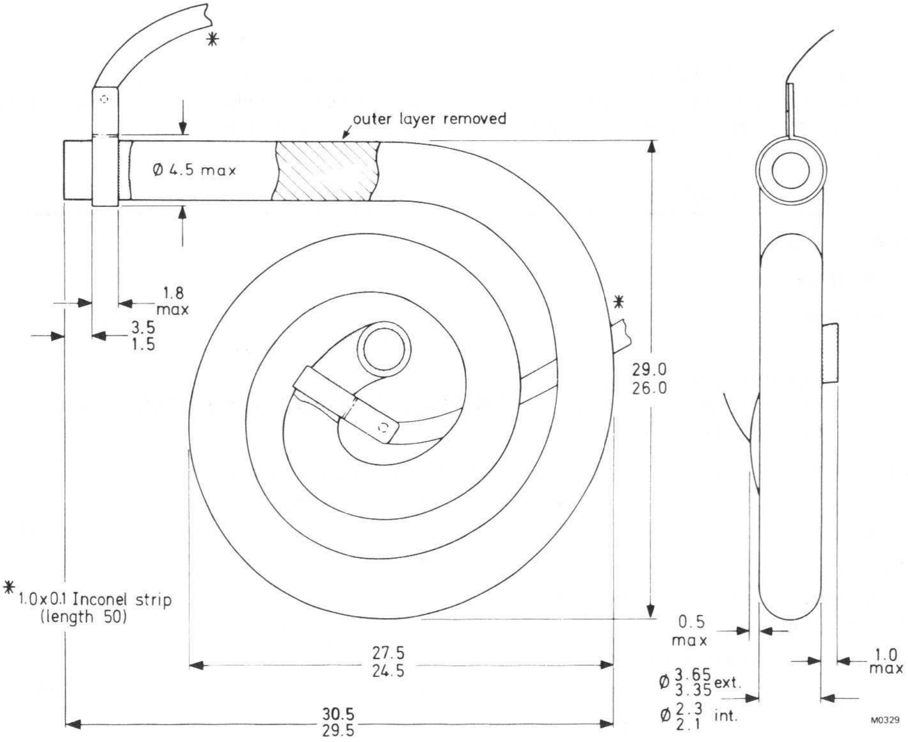

MECHANICAL DATA X710BL

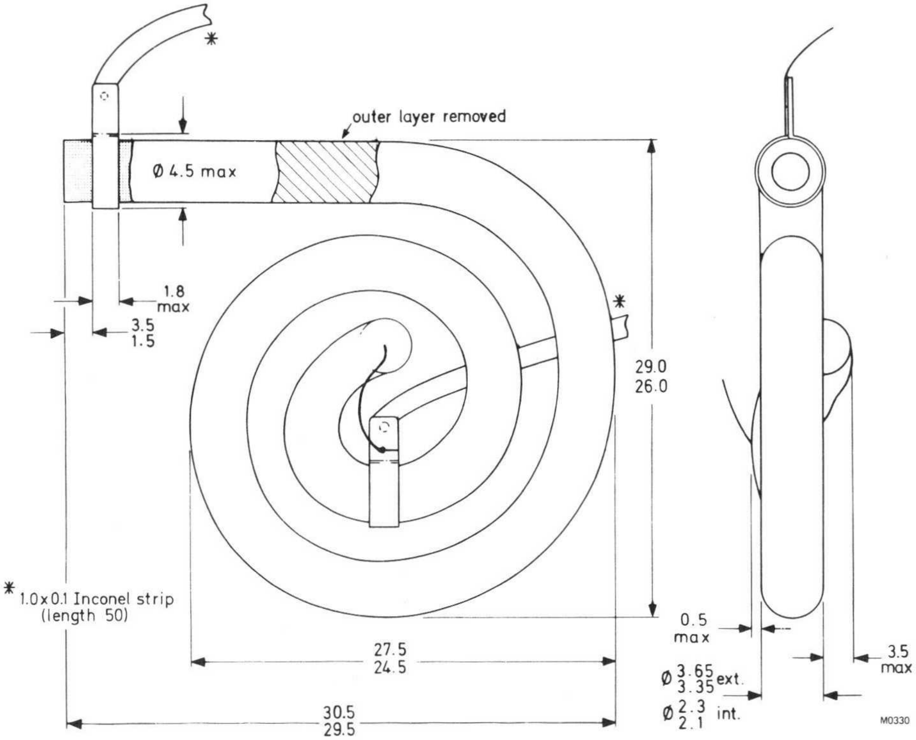

* 1.0 x 0.1 Inconel strip (length 50)

DEVELOPMENT DATA

SINGLE CHANNEL ELECTRON MULTIPLIERS

Single channel electron multipliers in the form of a glass planar spiral tube with a rectangular section input cone 3.5 x 15.5 mm.
The X713AL has an open-ended output. To ensure efficient collection of electrons, a collector should be used, biased at 100 to 200 V positive with respect to the multiplier output.
The X713BL has a closed output.

QUICK REFERENCE DATA

Typical gain at 2.5 kV		1.5×10^8	
Typical resistance		3.0×10^8	Ω
Operating voltage	max.	3.5	kV

Unless otherwise stated, data is applicable to both types.
This data should be read in conjunction with GENERAL EXPLANATORY NOTES – SINGLE CHANNEL ELECTRON MULTIPLIERS

CHARACTERISTICS (measured at 2.5 kV and 10 000 pulse/s where applicable)

	Min.	Typ.	Max.	
Resistance	2.0	3.0	4.0	$\times 10^8$ Ω
Gain (note 1)	1.0	1.5	–	$\times 10^8$
Background above an equivalent threshold of 2.0×10^6 electrons	–	0.05	0.20	pulse/s
Starting voltage with an equivalent threshold of 2.0×10^6 electrons	1.4	1.6	1.8	kV
Resolution (F.W.H.M.) at a modal gain of 1.8×10^8	–	50	70	%
Effective input aperature	3.0 x 14.5	3.5 x 15.5	5.0 x 17	mm

RATINGS

Limiting values in accordance with the Absolute Maximum System (IEC 134)

Operating voltage	max.	3.5	kV
Temperature operating and storage	max.	70	°C
Bake temperature in vacuo (note 2)	max.	400	°C
Ambient pressure with high voltage applied	max.	50	mN.m^{-2}

MASS 4.0 g

MOUNTING POSITION

Any. In environments where vibration may be encountered, the device must not be supported by the leads alone.

NOTES

1. The gain of a typical multiplier will increase by a factor of approx. 2 for an increase of operating voltage of 500 V.
2. Baking will cause a permanent slight loss of gain and it is advisable to keep the baking time to a minimum, for example, baking for 16 hours at 400 °C could reduce the gain by approximately a factor of 2.

MECHANICAL DATA X713AL

Dimensions in mm

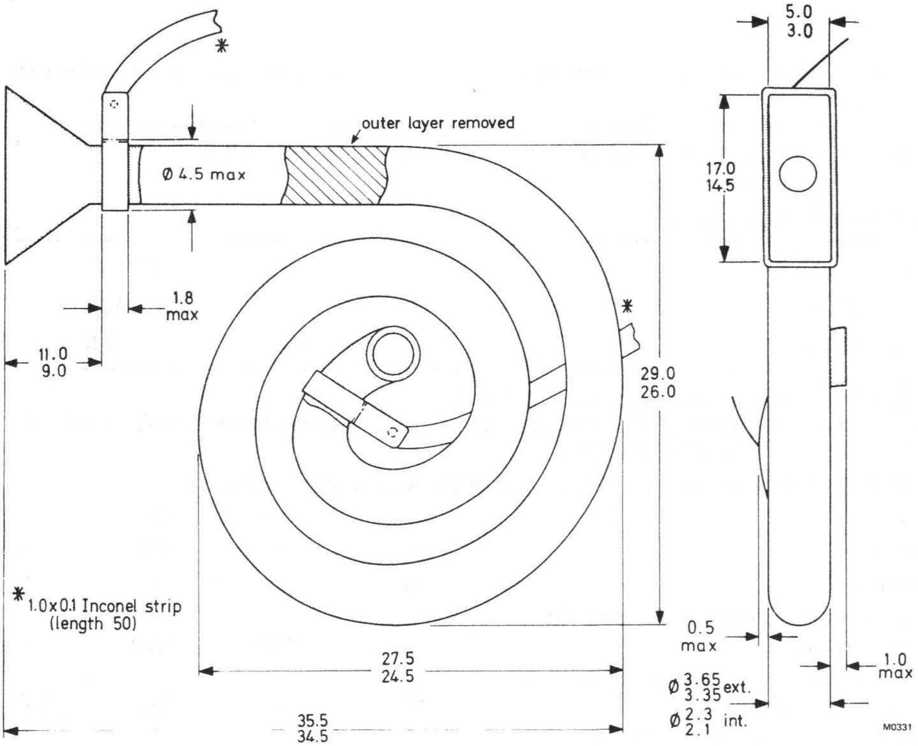

* 1.0 x 0.1 Inconel strip (length 50)

MECHANICAL DATA X713BL

Dimensions in mm

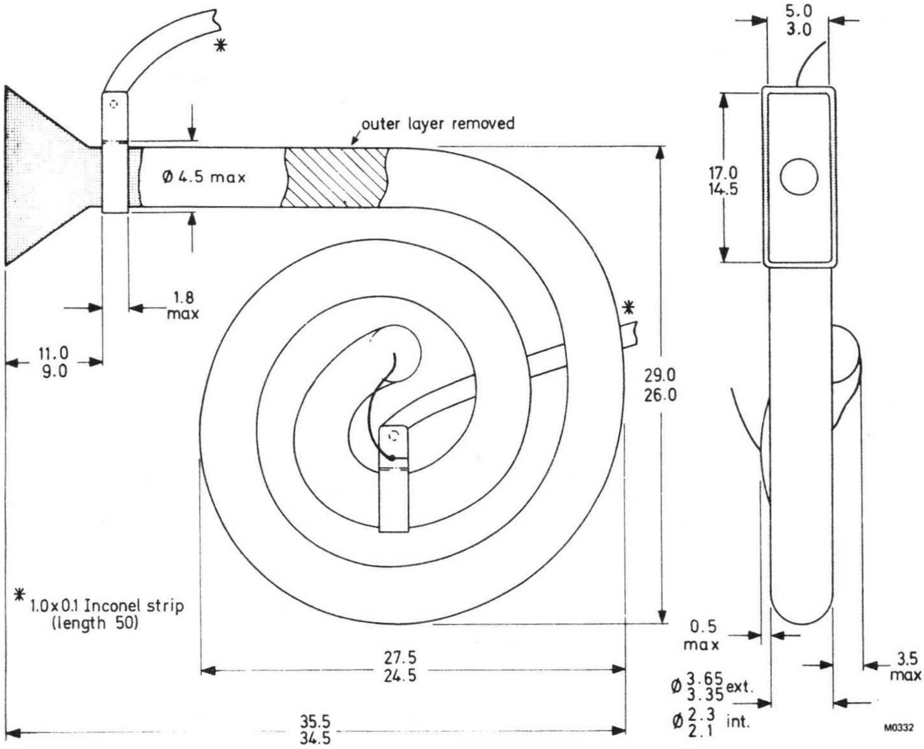

* 1.0 x 0.1 Inconel strip (length 50)

SINGLE CHANNEL ELECTRON MULTIPLIERS

Single channel electron multipliers in the form of a glass planar spiral tube with a rectangular section input cone 3.5 x 15.5 mm.
The X714AL has an open-ended output. To ensure efficient collection of electrons, a collector should be used, biased at 100 to 200 V positive with respect to the multiplier output.
The X714BL has a closed output.

QUICK REFERENCE DATA

Typical gain at 2.5 kV		1.5×10^8	
Typical resistance		3.0×10^8	Ω
Operating voltage	max.	3.5	kV

Unless otherwise stated, data is applicable to both types.
This data should be read in conjunction with GENERAL EXPLANATORY NOTES – SINGLE CHANNEL ELECTRON MULTIPLIERS

CHARACTERISTICS (measured at 2.5 kV and 10 000 pulse/s where applicable)

	Min.	Typ.	Max.	
Resistance	2.0	3.0	4.0	$\times 10^8$ Ω
Gain (note 1)	1.0	1.5	–	$\times 10^8$
Background above an equivalent threshold of 2.0×10^6 electrons	–	0.05	0.20	pulse/s
Starting voltage with an equivalent threshold of 2.0×10^6 electrons	1.4	1.6	1.8	kV
Resolution (F.W.H.M.) at a modal gain of 1.8×10^8	–	50	70	%
Effective input aperture	3.0 x 14.5	3.5 x 15.5	5.0 x 17	mm

RATINGS

Limiting values in accordance with the Absolute Maximum System (IEC 134)

Operating voltage	max.	3.5	kV
Temperature operating and storage	max.	70	°C
Bake temperature in vacuo (note 2)	max.	400	°C
Ambient pressure with high voltage applied	max.	50	$\mathrm{mN.m^{-2}}$

MASS 4.0 g

MOUNTING POSITION

Any. In environments where vibration may be encountered, the device must not be supported by the leads alone.

NOTES

1. The gain of a typical multiplier will increase by a factor of approx. 2 for an increase of operating voltage of 500 V.
2. Baking will cause a permanent slight loss of gain and it is advisable to keep the baking time to a minimum, for example, baking for 16 hours at 400 °C could reduce the gain by approximately a factor of 2.

MECHANICAL DATA X714AL

Dimensions in mm

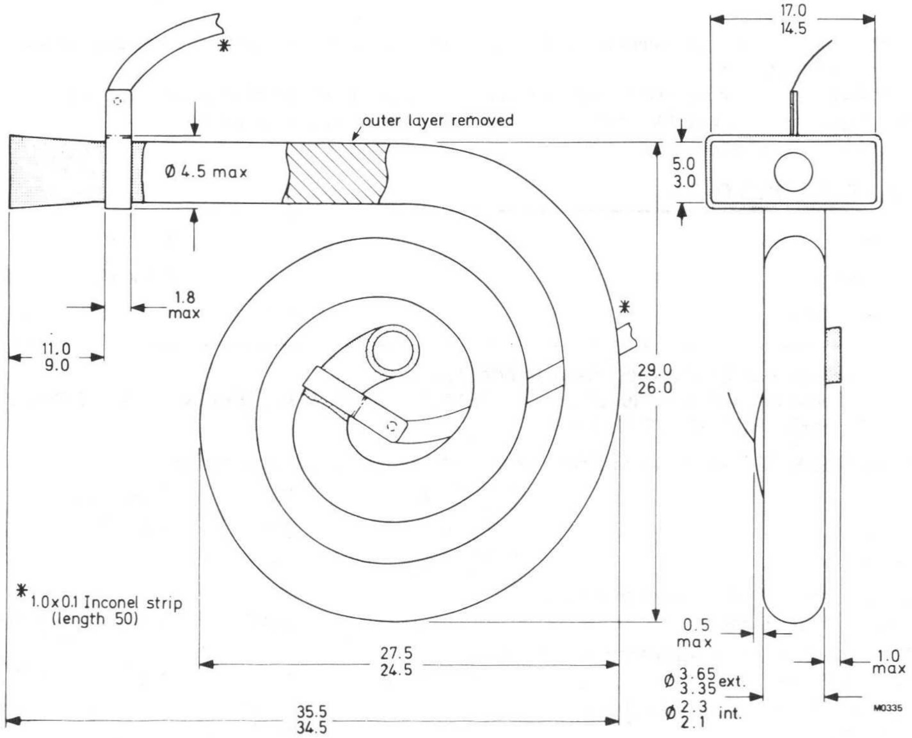

MECHANICAL DATA X714BL

Dimensions in mm

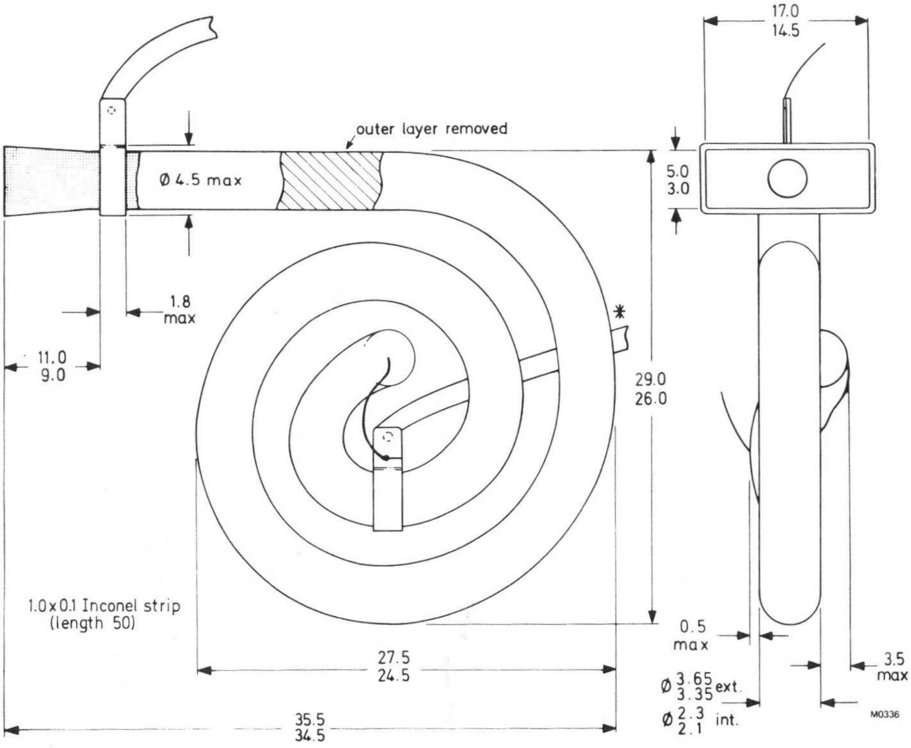

DEVELOPMENT DATA

SINGLE CHANNEL ELECTRON MULTIPLIERS

Single channel electron multipliers in the form of a glass planar spiral tube with a 10 mm diameter input cone.
The X719AL has an open-ended output. To ensure efficient collection of electrons, a collector should be used, biased at 100 to 200 V positive with respect to the multiplier output.
The X719BL has a closed output.

QUICK REFERENCE DATA

Typical gain at 2.5 kV		1.5×10^8	
Typical resistance		3.0×10^8	Ω
Operating voltage	max.	3.5	kV

Unless otherwise stated, data is applicable to both types.
This data should be read in conjunction with GENERAL EXPLANATORY NOTES – SINGLE CHANNEL ELECTRON MULTIPLIERS

CHARACTERISTICS (measured at 2.5 kV and 10 000 pulse/s where applicable)

	Min.	Typ.	Max.	
Resistance	2.0	3.0	4.0	$\times 10^8$ Ω
Gain (note 1)	1.0	1.5	–	$\times 10^8$
Background above an equivalent threshold of 2.0×10^6 electrons	--	0.05	0.20	pulse/s
Starting voltage with an equivalent threshold of 2.0×10^6 electrons	1.4	1.6	1.8	kV
Resolution (F.W.H.M.) at a modal gain of 1.8×10^8	–	50	70	%
Effective input diameter	9.0	10	–	mm

RATINGS

Limiting values in accordance with the Absolute Maximum System (IEC 134)

Operating voltage	max.	3.5	kV
Temperature operating and storage	max.	70	°C
Bake temperature in vacuo (note 2)	max.	400	°C
Ambient pressure with high voltage applied	max.	50	$mN.m^{-2}$

MASS 4.0 g

MOUNTING POSITION

Any. In environments where vibration may be encountered, the device must not be supported by the leads alone.

NOTES

1. The gain of a typical multiplier will increase by a factor of approx. 2 for an increase of operating voltage of 500 V.
2. Baking will cause a permanent slight loss of gain and it is advisable to keep the baking time to a minimum, for example, baking for 16 hours at 400 °C could reduce the gain by approximately a factor of 2.

MECHANICAL DATA X719AL

Dimensions in mm

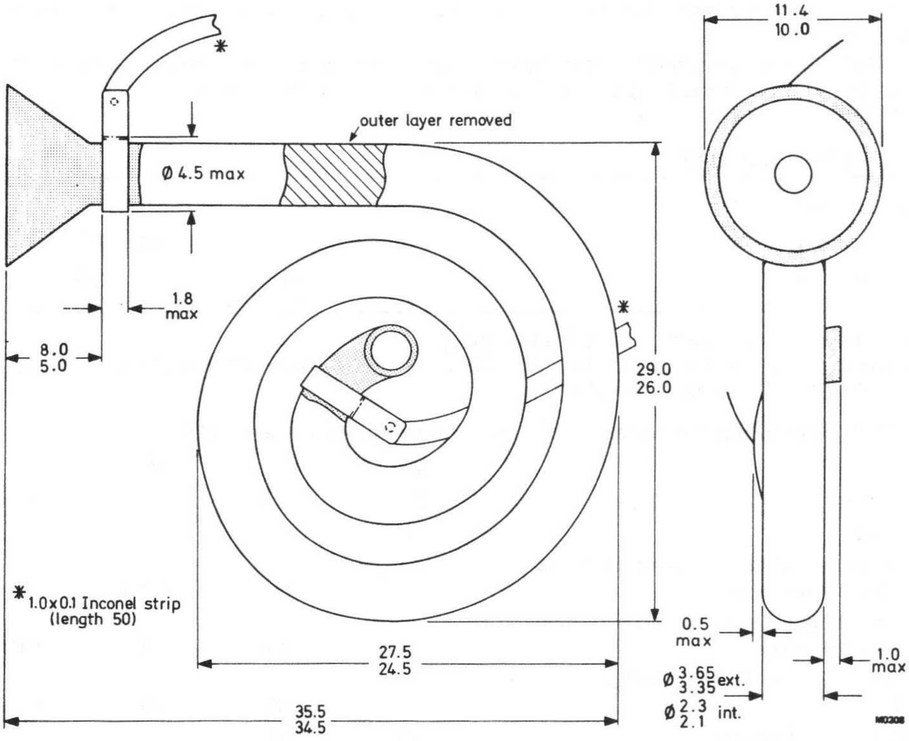

MECHANICAL DATA X719BL

Dimensions in mm

DEVELOPMENT DATA

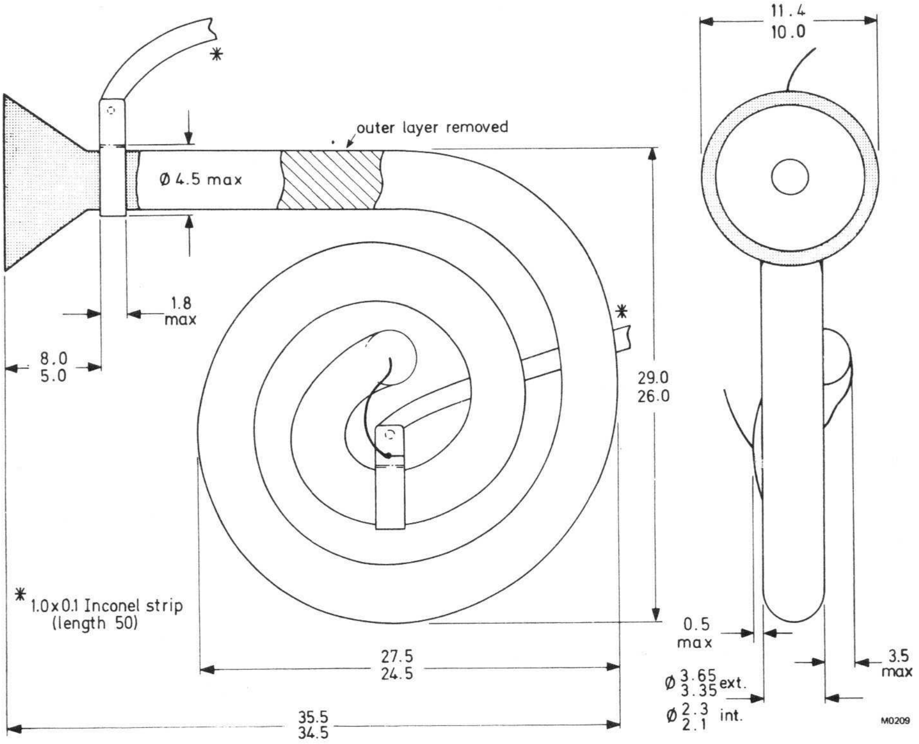

* 1.0 x 0.1 Inconel strip (length 50)

SINGLE CHANNEL ELECTRON MULTIPLIERS

Single channel electron multipliers in the form of a glass planar spiral tube.
The X810AL has an open-ended output. To ensure efficient collection of electrons, a collector should be used, biased at 100 to 200 V positive with respect to the multiplier output.
The X810BL has a closed output.
Alternative output configurations may be considered on request.

QUICK REFERENCE DATA

Typical gain at 2.5 kV		1.0×10^8	
Typical resistance		7.0×10^8	Ω
Operating voltage	max.	3.5	kV

This data should be read in conjunction with GENERAL EXPLANATORY NOTES – SINGLE CHANNEL ELECTRON MULTIPLIERS

CHARACTERISTICS (measured at 2.5 kV and 10 000 pulse/s where applicable)

	Min.	Typ.	Max.	
Resistance	5.0	7.0	9.0	$\times 10^8$ Ω
Gain (note 1)	0.5	1.0	–	$\times 10^8$
Background above an equivalent threshold of 2.0×10^6 electrons	–	0.05	0.20	pulse/s
Starting voltage with an equivalent threshold of 2.0×10^6 electrons	1.2	1.6	2.0	kV
Resolution (F.W.H.M.) at a modal gain of 10^8	–	40	70	%
Effective input diameter	1.1	1.25	–	mm

RATINGS

Limiting values in accordance with the Absolute Maximum System (IEC 134)

Operating voltage	max.	3.5	kV
Temperature, operating and storage	max.	70	°C
Bake temperature in vacuo (note 2)	max.	400	°C
Ambient pressure with high voltage applied	max.	50	mN.m^{-2}

MASS	1.0	g

MOUNTING POSITION

Any. In environments where vibration may be encountered, the device must not be supported by the leads alone.

NOTES

1. The gain of a typical multiplier will increase by a factor of approx. 2 for an increase of operating voltage of 500 V.
2. Baking will cause a permanent slight loss of gain and it is advisable to keep the baking time to a minimum, for example, baking for 16 hours at 400 °C could reduce the gain by approximately a factor of 2.

MECHANICAL DATA

Dimensions in mm

X810AL

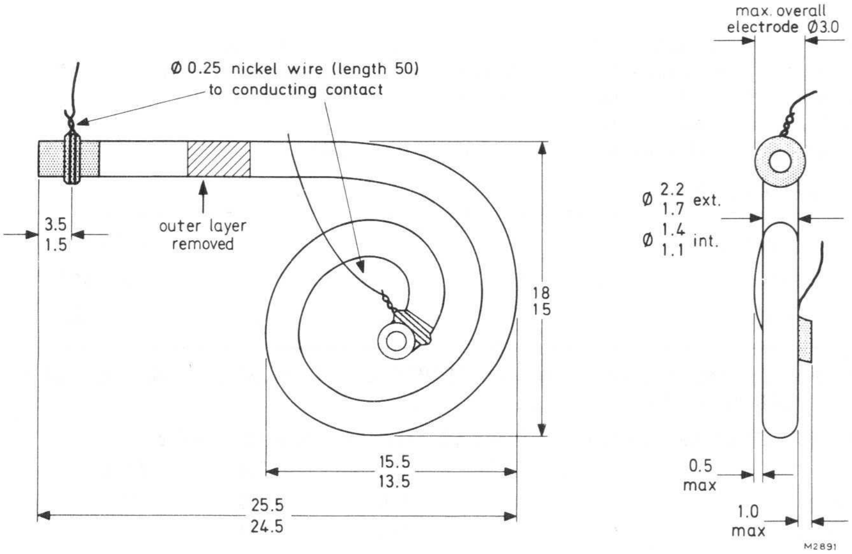

X810BL

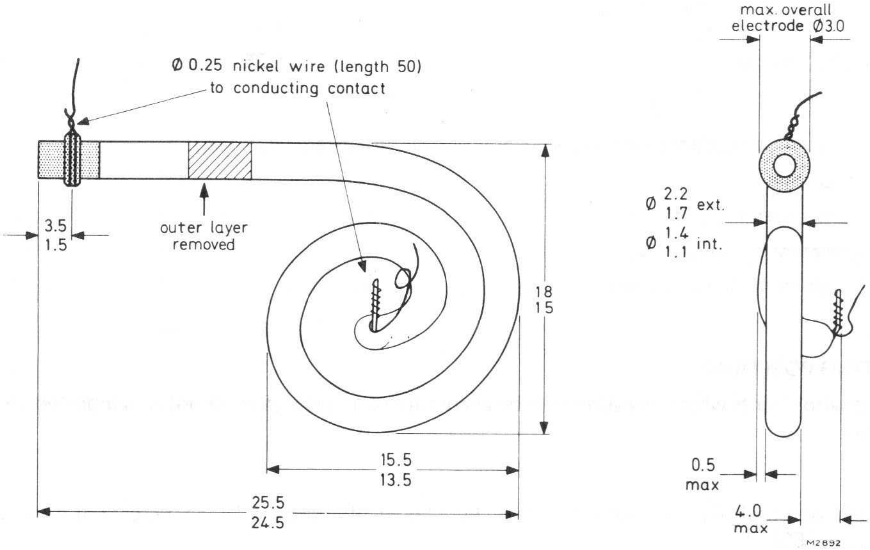

SINGLE CHANNEL ELECTRON MULTIPLIERS

Single channel electron multipliers in the form of a glass planar spiral tube with a rectangular section input cone 2.0 x 8.0 mm.
The X812AL has an open-ended output. To ensure efficient collection of electrons, a collector should be used, biased at 100 to 200 V positive with respect to the multiplier output.
The X812BL has a closed output.
Alternative output configurations may be considered on request.

QUICK REFERENCE DATA

Typical gain at 2.5 kV		1.0×10^8	
Typical resistance		7.0×10^8	Ω
Operating voltage	max.	3.5	kV

This data should be read in conjunction with GENERAL EXPLANATORY NOTES – SINGLE CHANNEL ELECTRON MULTIPLIERS

CHARACTERISTICS (measured at 2.5 kV and 10 000 pulse/s where applicable)

	Min.	Typ.	Max.	
Resistance	5.0	7.0	9.0	$\times 10^8$ Ω
Gain (note 1)	0.5	1.0	–	$\times 10^8$
Background above an equivalent threshold of 2.0×10^6 electrons	–	0.05	0.20	pulse/s
Starting voltage with an equivalent threshold of 2.0×10^6 electrons	1.2	1.6	2.0	kV
Resolution (F.W.H.M.) at a modal gain of 5.0×10^7	–	40	70	%
Effective input aperture	1.5 x 7.5	2.0 x 8.0	–	mm

RATINGS

Limiting values in accordance with the Absolute Maximum System (IEC 134)

Operating voltage	max.	3.5	kV
Temperature operating and storage	max.	70	°C
Bake temperature in vacuo (note 2)	max.	400	°C
Ambient pressure with high voltage applied	max.	50	$\mathrm{mN.m^{-2}}$
MASS		1.0	g

MOUNTING POSITION

Any. In environments where vibration may be encountered, the device must not be supported by the leads alone.

NOTES

1. The gain of a typical multiplier will increase by a factor of approx. 2 for an increase of operating voltage of 500 V.
2. Baking will cause a permanent slight loss of gain and it is advisable to keep the baking time to a minimum, for example, baking for 16 hours at 400 °C could reduce the gain by approximately a factor of 2.

MECHANICAL DATA

Dimensions in mm

X812AL

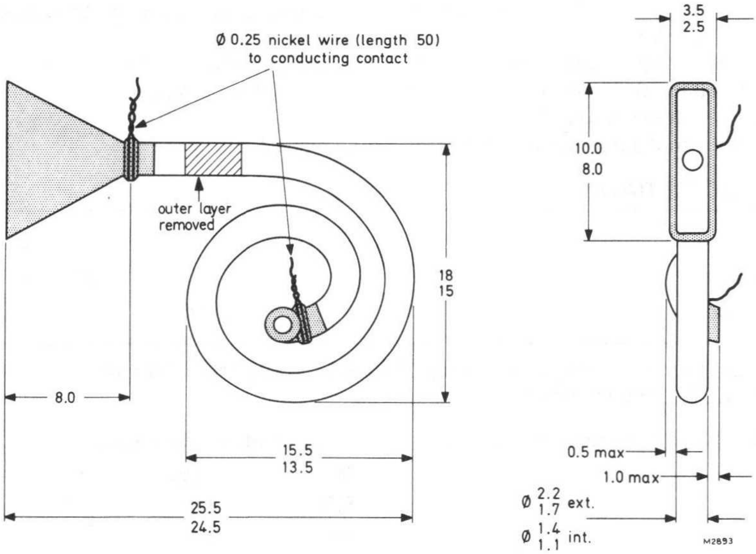

X812BL

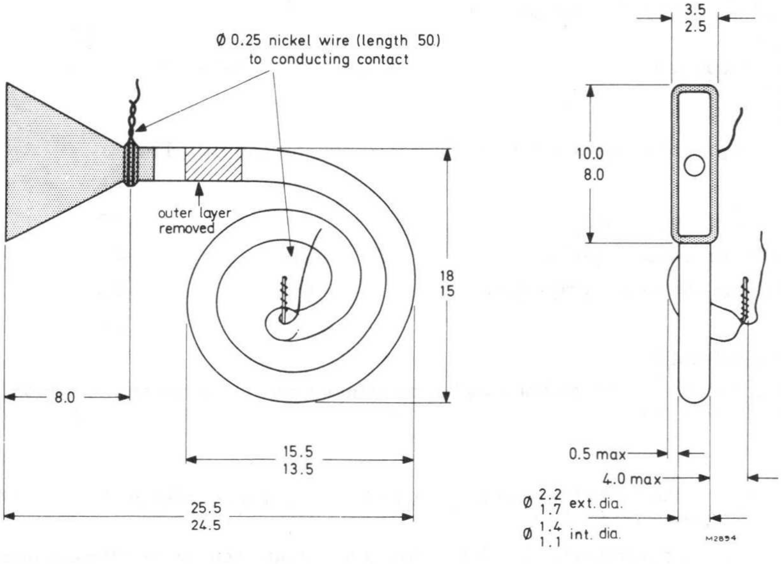

SINGLE CHANNEL ELECTRON MULTIPLIERS

Single channel electron multipliers in the form of a glass planar spiral tube with a rectangular section input cone 2.0 x 8.0 mm.

The X814AL has an open-ended output. To ensure efficient collection of electrons, a collector should be used, biased at 100 to 200 V positive with respect to the multiplier output.

The X814BL has a closed output.

Alternative output configurations may be considered on request.

QUICK REFERENCE DATA

Typical gain at 2.5 kV		1.0×10^8	
Typical resistance		7.0×10^8	Ω
Operating voltage	max.	3.5	kV

This data should be read in conjunction with GENERAL EXPLANATORY NOTES – SINGLE CHANNEL ELECTRON MULTIPLIERS

CHARACTERISTICS (measured at 2.5 kV and 10 000 pulse/s where applicable)

	Min.	Typ.	Max.	
Resistance	5.0	7.0	9.0	$\times 10^8$ Ω
Gain (note 1)	0.5	1.0	–	$\times 10^8$
Background above an equivalent threshold of 2.0×10^6 electrons	–	0.05	0.20	pulse/s
Starting voltage with an equivalent threshold of 2.0×10^6 electrons	1.2	1.6	2.0	kV
Resolution (F.W.H.M.) at a modal gain of 5.0×10^7	–	40	70	%
Effective input aperture	1.5 x 7.5	2.0 x 8.0	–	mm

RATINGS

Limiting values in accordance with the Absolute Maximum System (IEC 134)

Operating voltage	max.	3.5	kV
Temperature operating and storage	max.	70	°C
Bake temperature in vacuo (note 2)	max.	400	°C
Ambient pressure with high voltage applied	max.	50	$\mathrm{mN.m^{-2}}$

MASS 1.0 g

MOUNTING POSITION

Any. In environments where vibration may be encountered, the device must not be supported by the leads alone.

NOTES

1. The gain of a typical multiplier will increase by a factor of approx. 2 for an increase of operating voltage of 500 V.
2. Baking will cause a permanent slight loss of gain and it is advisable to keep the baking time to a minimum, for example, baking for 16 hours at 400 °C could reduce the gain by approximately a factor of 2.

MECHANICAL DATA

Dimensions in mm

X814AL

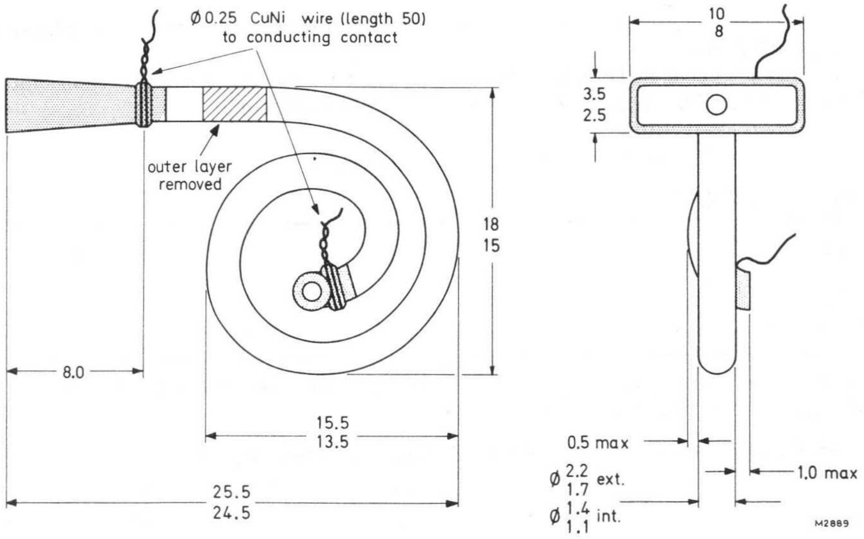

X814BL

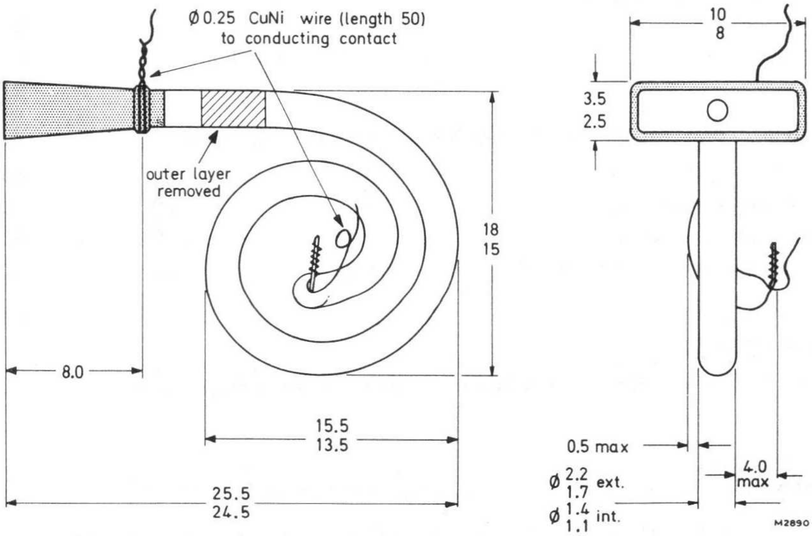

SINGLE CHANNEL ELECTRON MULTIPLIERS

Single channel electron multipliers in the form of a glass planar spiral tube with a 5.0 mm diameter input cone.
The X818AL has an open-ended output. To ensure efficient collection of electrons, a collector should be used, biased at 100 to 200 V positive with respect to the multiplier output.
The X818BL has a closed output.
Alternative output configurations may be considered on request.

QUICK REFERENCE DATA

Typical gain at 2.5 kV		1.0×10^8	
Typical resistance		7.0×10^8	Ω
Operating voltage	max.	3.5	kV

This data should be read in conjunction with GENERAL EXPLANATORY NOTES – SINGLE CHANNEL ELECTRON MULTIPLIERS

CHARACTERISTICS (measured at 2.5 kV and 10 000 pulse/s where applicable)

	Min.	Typ.	Max.	
Resistance	5.0	7.0	9.0	$\times 10^8$ Ω
Gain (note 1)	0.5	1.0	–	$\times 10^8$
Background above an equivalent threshold of 2.0×10^6 electrons	–	0.05	0.2	pulse/s
Starting voltage with an equivalent threshold of 2.0×10^6 electrons	1.2	1.6	2.0	kV
Resolution (F.W.H.M.) at a modal gain of 5.0×10^7	–	40	70	%
Effective input diameter	4.0	5.0	–	mm

RATINGS

Limiting values in accordance with the Absolute Maximum System (IEC 134)

Operating voltage	max.	3.5	kV
Temperature operating and storage	max.	70	°C
Bake temperature in vacuo (note 2)	max.	400	°C
Ambient pressure with high voltage applied	max.	50	$mN.m^{-2}$

MASS 1.0 g

MOUNTING POSITION

Any. In environments where vibration may be encountered, the device must not be supported by the leads alone.

NOTES

1. The gain of a typical multiplier will increase by a factor of approx. 2 for an increase of operating voltage of 500 V.
2. Baking will cause a permanent slight loss of gain and it is advisable to keep the baking time to a minimum, for example, baking for 16 hours at 400 °C could reduce the gain by approximately a factor of 2.

MECHANICAL DATA

Dimensions in mm

X818AL

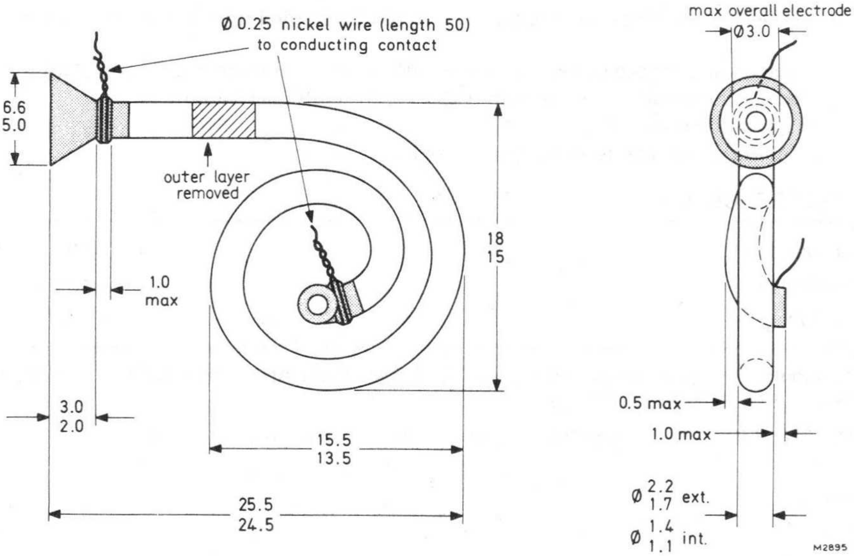

X818BL

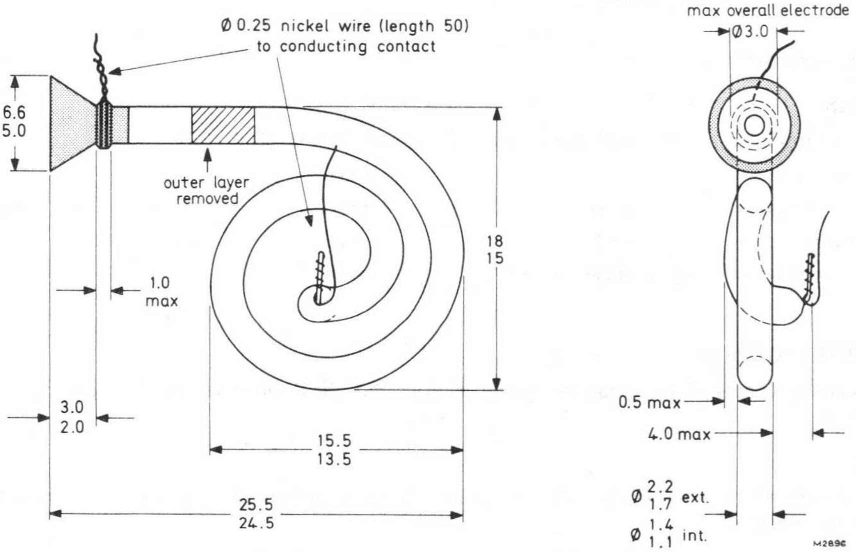

SINGLE CHANNEL ELECTRON MULTIPLIERS

Single channel electron multipliers in the form of a glass planar spiral tube.
The X910AL has an open-ended output. To ensure efficient collection of electrons, a collector should be used, biased at 100 to 200 V positive with respect to the multiplier output.
The X910BL has a closed output.

QUICK REFERENCE DATA

Typical gain at 2.5 kV		1.5×10^8	
Typical resistance		6.0×10^8	Ω
Operating voltage	max.	4.0	kV

Unless otherwise stated, data is applicable to both types.
This data should be read in conjunction with GENERAL EXPLANATORY NOTES – SINGLE CHANNEL ELECTRON MULTIPLIERS

CHARACTERISTICS (measured at 2.5 kV and 10 000 pulse/s where applicable)

	Min.	Typ.	Max.	
Resistance	4.0	6.0	8.0	$\times 10^8$ Ω
Gain (note 1)	1.0	1.5	–	$\times 10^8$
Background above an equivalent threshold of 2.0×10^6 electrons	–	0.05	0.20	pulse/s
Starting voltage with an equivalent threshold of 2.0×10^6 electrons	1.4	1.6	1.8	kV
Resolution (F.W.H.M.) at a modal gain of 1.8×10^8	–	50	70	%
Effective input diameter	2.0	2.2	–	mm

RATINGS

Limiting values in accordance with the Absolute Maximum System (IEC 134)

Operating voltage	max.	4.0	kV
Temperature operating and storage	max.	70	°C
Bake temperature in vacuo (note 2)	max.	400	°C
Ambient pressure with high voltage applied	max.	50	$mN.m^{-2}$

MASS

4.0 g

MOUNTING POSITION

Any. In environments where vibration may be encountered, the device must not be supported by the leads alone.

NOTES

1. The gain of a typical multiplier will increase by a factor of approx. 2 for an increase of operating voltage of 500 V.
2. Baking will cause a permanent slight loss of gain and it is advisable to keep the baking time to a minimum, for example, baking for 16 hours at 400 °C could reduce the gain by approximately a factor of 2.

MECHANICAL DATA X910AL

Dimensions in mm

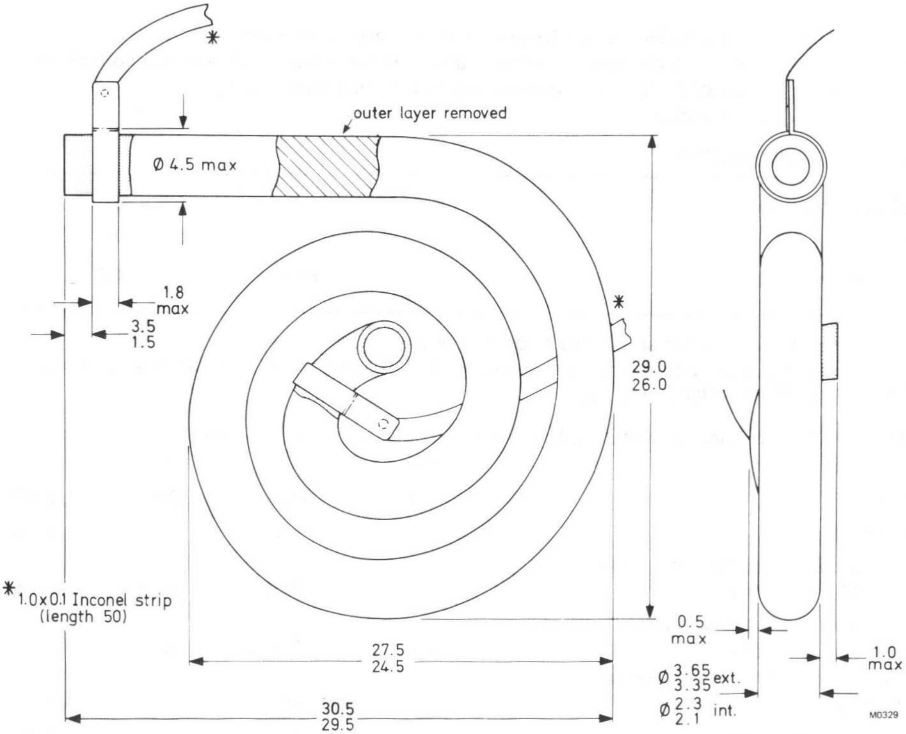

MECHANICAL DATA X910BL

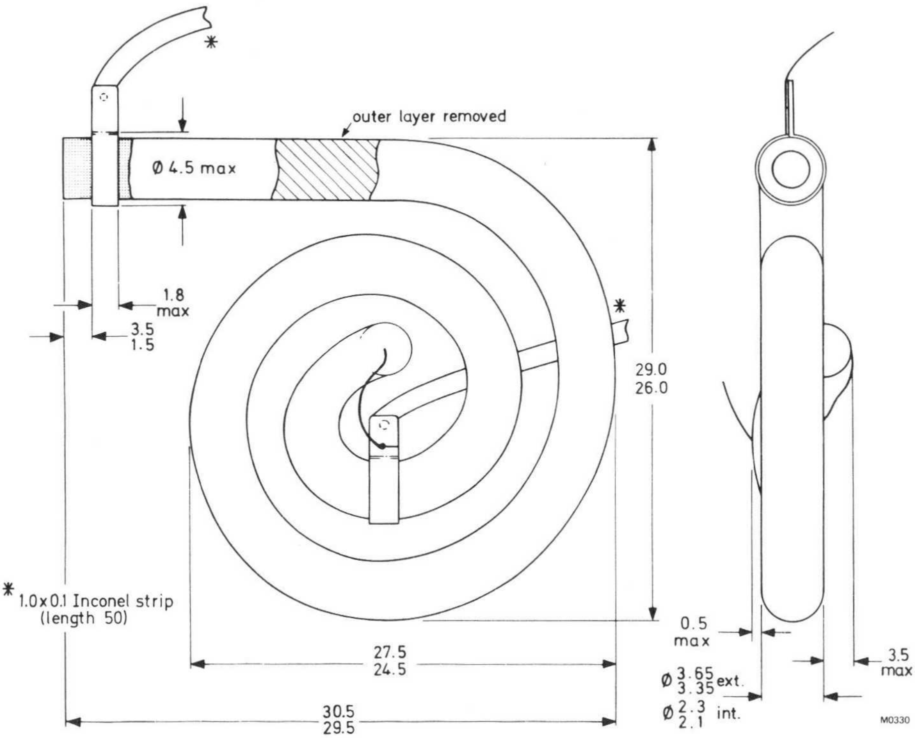

SINGLE CHANNEL ELECTRON MULTIPLIERS

Single channel electron multipliers in the form of a glass planar spiral tube with a rectangular section input cone 3.5 x 15.5 mm.
The X913AL has an open-ended output. To ensure efficient collection of electrons, a collector should be used, biased at 100 to 200 V positive with respect to the multiplier output.
The X913BL has a closed output.

QUICK REFERENCE DATA

Typical gain at 2.5 kV		1.5×10^8	
Typical resistance		6.0×10^8	Ω
Operating voltage	max.	4.0	kV

Unless otherwise stated, data is applicable to both types.
This data should be read in conjunction with GENERAL EXPLANATORY NOTES – SINGLE CHANNEL ELECTRON MULTIPLIERS

CHARACTERISTICS (measured at 2.5 kV and 10 000 pulse/s where applicable)

	Min.	Typ.	Max.	
Resistance	4.0	6.0	8.0	$\times 10^8$ Ω
Gain (note 1)	1.0	1.5	–	$\times 10^8$
Background above an equivalent threshold of 2.0×10^6 electrons	–	0.05	0.20	pulse/s
Starting voltage with an equivalent threshold of 2.0×10^6 electrons	1.4	1.6	1.8	kV
Resolution (F.W.H.M.) at a modal gain of 1.8×10^8	–	50	70	%
Effective input aperature	3.0 x 14.5	3.5 x 15.5	5.0 x 17	mm

RATINGS

Limiting values in accordance with the Absolute Maximum System (IEC 134)

Operating voltage	max.	4.0	kV
Temperature operating and storage	max.	70	°C
Bake temperature in vacuo (note 2)	max.	400	°C
Ambient pressure with high voltage applied	max.	50	$mN.m^{-2}$

MASS 4.0 g

MOUNTING POSITION

Any. In environments where vibration may be encountered, the device must not be supported by the leads alone.

NOTES

1. The gain of a typical multiplier will increase by a factor of approx. 2 for an increase of operating voltage of 500 V.
2. Baking will cause a permanent slight loss of gain and it is advisable to keep the baking time to a minimum, for example, baking for 16 hours at 400 °C could reduce the gain by approximately a factor of 2.

MECHANICAL DATA X913AL

Dimensions in mm

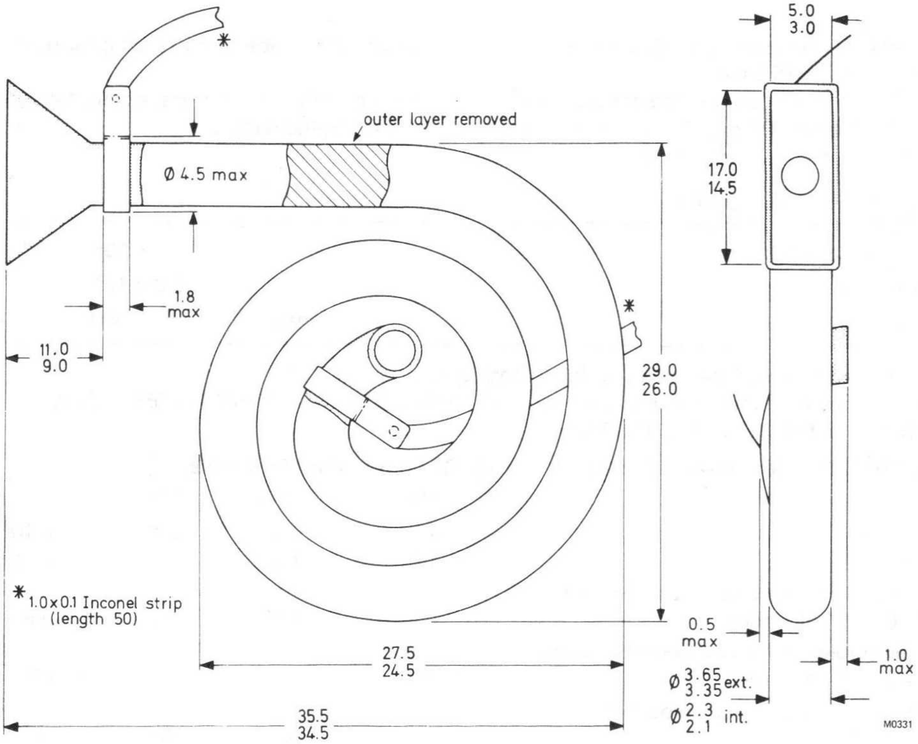

MECHANICAL DATA X913BL

Dimensions in mm

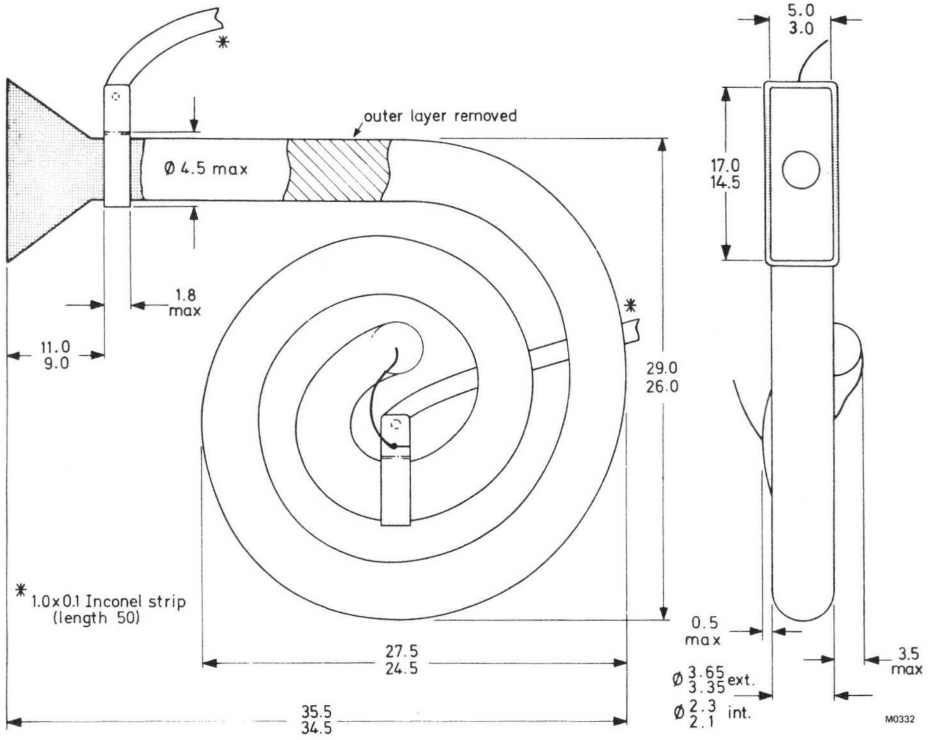

* 1.0 x 0.1 Inconel strip
(length 50)

SINGLE CHANNEL ELECTRON MULTIPLIERS

Single channel electron multipliers in the form of a glass planar spiral tube with a rectangular section input cone 3.5 x 15.5 mm.
The X914AL has an open-ended output. To ensure efficient collection of electrons, a collector should be used, biased at 100 to 200 V positive with respect to the multiplier output.
The X914BL has a closed output.

QUICK REFERENCE DATA

Typical gain at 2.5 kV		1.5×10^8	
Typical resistance		6.0×10^8	Ω
Operating voltage	max.	4.0	kV

Unless otherwise stated, data is applicable to both types.
This data should be read in conjunction with GENERAL EXPLANATORY NOTES – SINGLE CHANNEL ELECTRON MULTIPLIERS

CHARACTERISTICS (measured at 2.5 kV and 10 000 pulse/s where applicable)

	Min.	Typ.	Max.	
Resistance	4.0	6.0	8.0	$\times 10^8$ Ω
Gain (note 1)	1.0	1.5	–	$\times 10^8$
Background above an equivalent threshold of 2.0×10^6 electrons	–	0.05	0.20	pulse/s
Starting voltage with an equivalent threshold of 2.0×10^6 electrons	1.4	1.6	1.8	kV
Resolution (F.W.H.M.) at a modal gain of 1.8×10^8	–	50	70	%
Effective input aperture	3.0 x 14.5	3.5 x 15.5	5.0 x 17	mm

RATINGS

Limiting values in accordance with the Absolute Maximum System (IEC 134)

Operating voltage	max.	4.0	kV
Temperature operating and storage	max.	70	°C
Bake temperature in vacuo (note 2)	max.	400	°C
Ambient pressure with high voltage applied	max.	50	$mN.m^{-2}$

MASS 4.0 g

MOUNTING POSITION

Any. In environments where vibration may be encountered, the device must not be supported by the leads alone.

NOTES

1. The gain of a typical multiplier will increase by a factor of approx. 2 for an increase of operating voltage of 500 V.
2. Baking will cause a permanent slight loss of gain and it is advisable to keep the baking time to a minimum, for example, baking for 16 hours at 400 °C could reduce the gain by approximately a factor of 2.

MECHANICAL DATA X914AL

Dimensions in mm

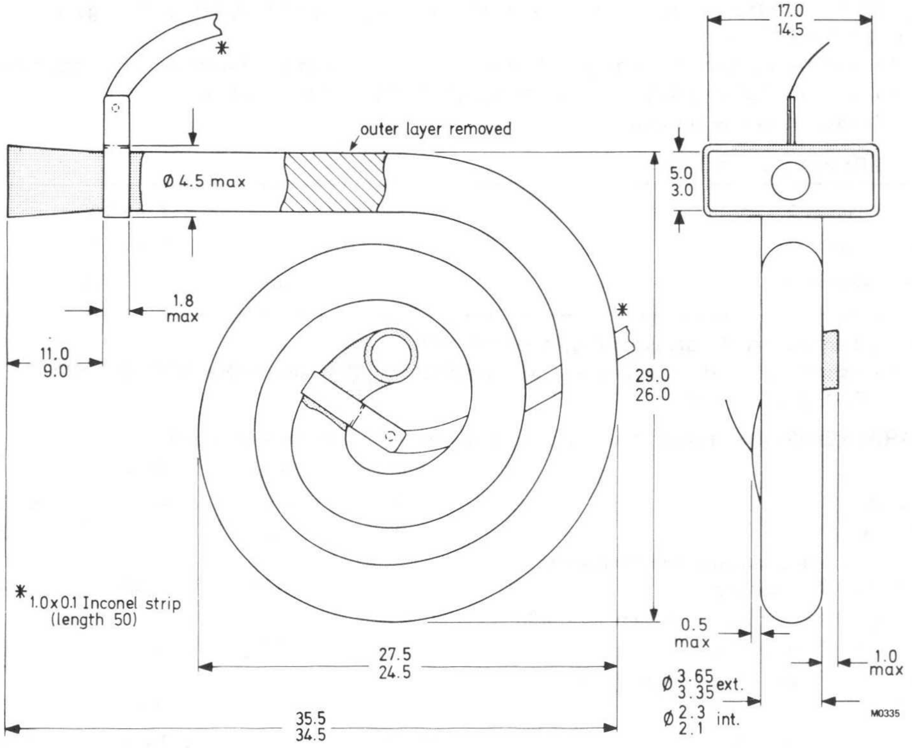

MECHANICAL DATA X914BL

Dimensions in mm

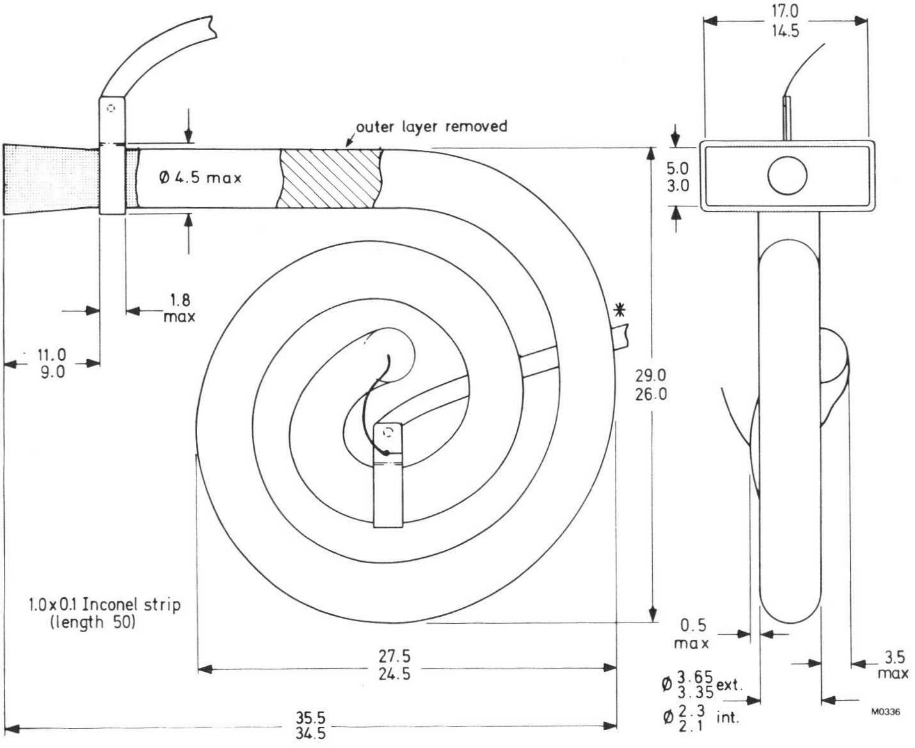

SINGLE CHANNEL ELECTRON MULTIPLIERS

Single channel electron multipliers in the form of a glass planar spiral tube with a 10 mm diameter input cone.
The X919AL has an open-ended output. To ensure efficient collection of electrons, a collector should be used, biased at 100 to 200 V positive with respect to the multiplier output.
The X919BL has a closed output.

QUICK REFERENCE DATA

Typical gain at 2.5 kV		1.5×10^8	
Typical resistance		6.0×10^8	Ω
Operating voltage	max.	4.0	kV

Unless otherwise stated, data is applicable to both types.
This data should be read in conjunction with GENERAL EXPLANATORY NOTES – SINGLE CHANNEL ELECTRON MULTIPLIERS

CHARACTERISTICS (measured at 2.5 kV and 10 000 pulse/s where applicable)

	Min.	Typ.	Max.	
Resistance	4.0	6.0	8.0	$\times 10^8$ Ω
Gain (note 1)	1.0	1.5	–	$\times 10^8$
Background above an equivalent threshold of 2.0×10^6 electrons	--	0.05	0.20	pulse/s
Starting voltage with an equivalent threshold of 2.0×10^6 electrons	1.4	1.6	1.8	kV
Resolution (F.W.H.M.) at a modal gain of 1.8×10^8	–	50	70	%
Effective input diameter	9.0	10	–	mm

RATINGS

Limiting values in accordance with the Absolute Maximum System (IEC 134)

Operating voltage	max.	4.0	kV
Temperature operating and storage	max.	70	°C
Bake temperature in vacuo (note 2)	max.	400	°C
Ambient pressure with high voltage applied	max.	50	$mN.m^{-2}$

MASS 4.0 g

MOUNTING POSITION

Any. In environments where vibration may be encountered, the device must not be supported by the leads alone.

NOTES

1. The gain of a typical multiplier will increase by a factor of approx. 2 for an increase of operating voltage of 500 V.
2. Baking will cause a permanent slight loss of gain and it is advisable to keep the baking time to a minimum, for example, baking for 16 hours at 400 °C could reduce the gain by approximately a factor of 2.

MECHANICAL DATA X919AL

Dimensions in mm

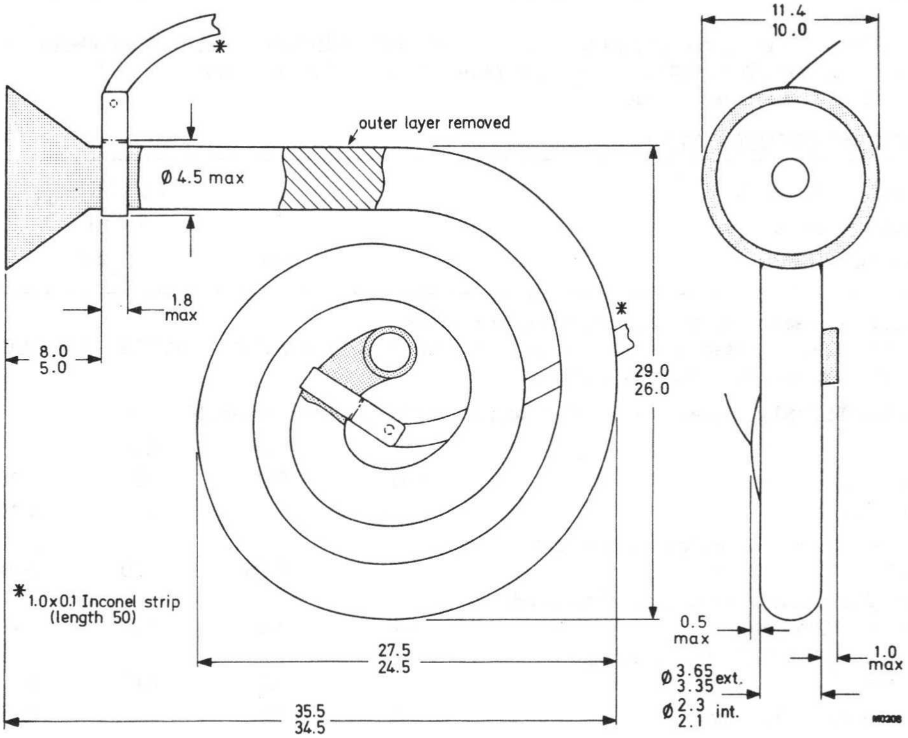

MECHANICAL DATA X919BL

Dimensions in mm

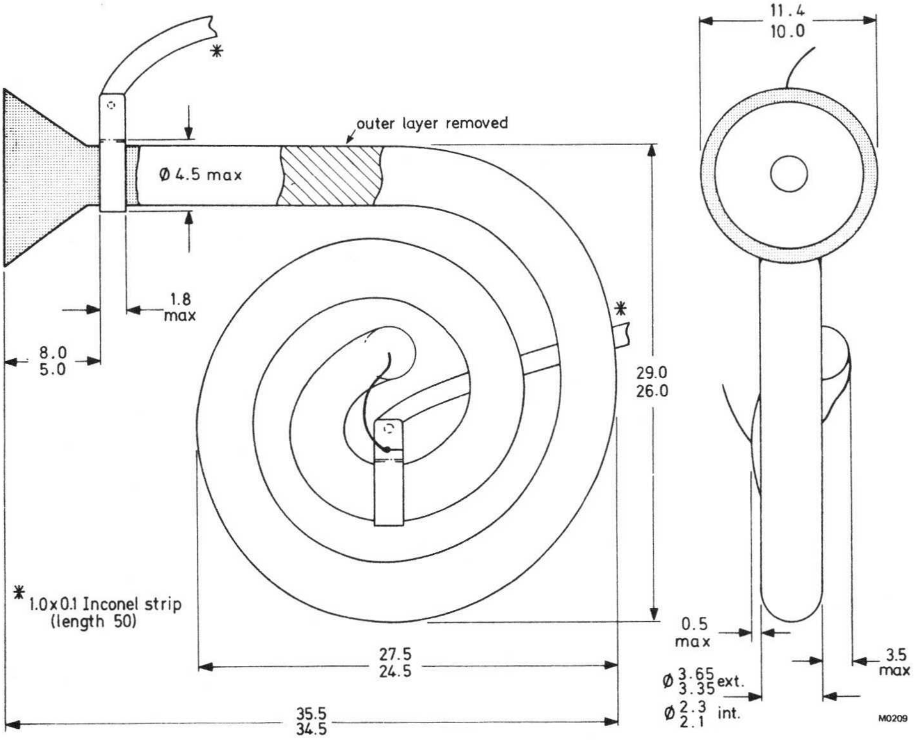

SINGLE CHANNEL ELECTRON MULTIPLIERS

Single channel electron multipliers in the form of a glass planar spiral tube with a 15 mm diameter input cone.
The X959AL has an open-ended output. To ensure efficient collection of electrons, a collector should be used, biased at 100 to 200 V positive with respect to the multiplier output.
The X959BL has a closed output.

QUICK REFERENCE DATA

Typical gain at 2.5 kV		1.5×10^8	
Typical resistance		6.0×10^8	Ω
Operating voltage	max.	4.0	kV

Unless otherwise stated, data is applicable to both types.
This data should be read in conjunction with GENERAL EXPLANATORY NOTES – SINGLE CHANNEL ELECTRON MULTIPLIERS

CHARACTERISTICS (measured at 2.5 kV and 10 000 pulse/s where applicable)

	Min.	Typ.	Max.	
Resistance	4.0	6.0	8.0	$\times 10^8$ Ω
Gain (note 1)	1.0	1.5	–	$\times 10^8$
Background above an equivalent threshold of 2.0×10^6 electrons	–	0.05	0.20	pulse/s
Starting voltage with an equivalent threshold of 2.0×10^6 electrons	1.4	1.6	1.8	kV
Resolution (F.W.H.M.) at a modal gain of 1.8×10^8	–	50	70	%
Effective input diameter	14	15	–	mm

RATINGS

Limiting values in accordance with the Absolute Maximum System (IEC 134)

Operating voltage	max.	4.0	kV
Temperature operating and storage	max.	70	°C
Bake temperature in vacuo (note 2)	max.	400	°C
Ambient pressure with high voltage applied	max.	50	$mN.m^{-2}$

MASS 4.0 g

MOUNTING POSITION

Any. In environments where vibration may be encountered, the device must not be supported by the leads alone.

NOTES

1. The gain of a typical multiplier will increase by a factor of approx. 2 for an increase of operating voltage of 500 V.
2. Baking will cause a permanent slight loss of gain and it is advisable to keep the baking time to a minimum, for example, baking for 16 hours at 400 °C could reduce the gain by approximately a factor of 2.

MECHANICAL DATA X959AL

Dimensions in mm

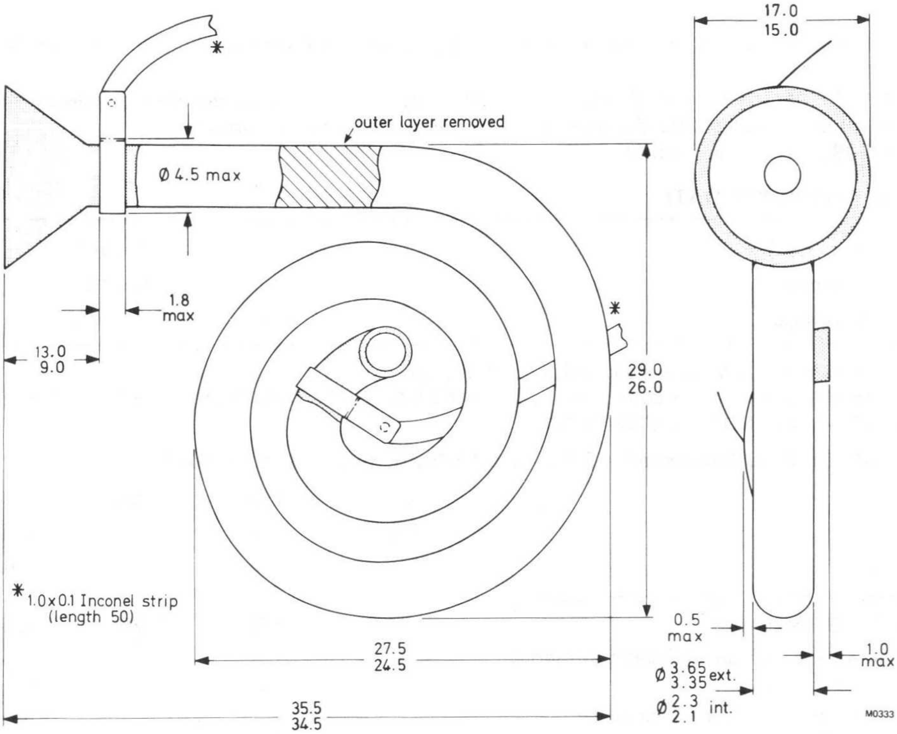

MECHANICAL DATA X959BL

Dimensions in mm

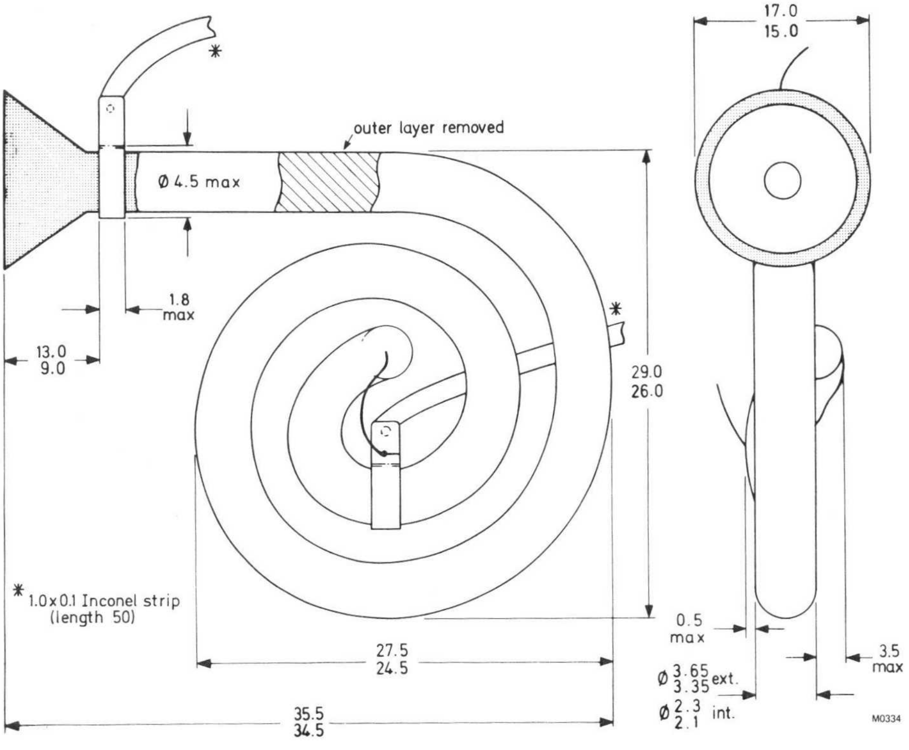

* 1.0 x 0.1 Inconel strip (length 50)

CHANNEL ELECTRON MULTIPLIER PLATES

SURVEY OF TYPES

type no.	plate dimensions mm	channel diameter μm	channel angle degrees	page
G12-20X50	20 x 50	12.5	13	403
G12-25SE	ϕ 25	12.5	13	407
G12-25SE/A	ϕ 25	12.5	13	
G12-36	ϕ 36	12.5	13	411
G12-36/A	ϕ 36	12.5	13	
G12-36DT/0	ϕ 36	12.5	0	415
G12-36DT/13	ϕ 36	12.5	13	
G12-46	ϕ 46	12.5	13	419
G12-46/A	ϕ 46	12.5	13	
G12-46DT/0	ϕ 46	12.5	0	423
G12-46DT/13	ϕ 46	12.5	13	
G12-70	ϕ 70	12.5	13	427
G25-20X50	20 x 50	25	13	431
G25-25	ϕ 27	25	13	435
G25-25/A	ϕ 27	25	13	
G25-50	ϕ 53	25	13	439
G25-70	ϕ 70	25	13	443

*SE = solid edge, DT = double thickness, A = matched pair of plates.

NOTE

Alternative configurations may be made available for scientific applications. Please contact the supplier for information.

CHANNEL ELECTRON MULTIPLIER PLATES
GENERAL EXPLANATORY NOTES

PRINCIPLES OF OPERATION

Multi-channel plates depend on the same physical phenomenon as single channel electron multipliers. They comprise a plate of special glass through which pass a large number of channels. The walls of the holes are specially processed to coat them with a high resistance material which also has a coefficient of secondary emission greater than 1. If a potential is applied between opposite faces of the plate each channel becomes a continuous dynode analogous to the separate dynodes of a photomultiplier together with its resistive chain.

As with single channel electron multipliers, the channel plate operates in a vacuum. It is important that the vacuum should be better than 13.3 $mN.m^{-2}$. An electron entering the low voltage end of one of the channels will generate secondary electrons upon striking the wall. These in turn will be accelerated by the axial field and will again strike the wall, producing a further increase in the number of secondaries and so on. The avalanching process produces a large burst of electrons at the output end of the channel, corresponding to each input electron. As illustrated in Fig.1 there is a statistical variation in pulse size depending on several factors. The channels are set at an angle to the face of the plate to ensure that electrons approaching the plate normally will not fail to strike the wall. The output contains about 10^3 electrons for each input electron. The gain is a steep function of the applied voltage and the supply should be well regulated for stability of operation.

The multiplier is usually used to amplify the electrons emitted from a photocathode placed close to the input face and excites a phosphor screen placed close to the output, preserving the spatial resolution and making an amplified image of the information on the photocathode. The input of the channel is also sensitive to ions, beta particles, X-rays, or any radiation of a suitable energy and this extends its use to many other applications. Since the resistive path is continuous, many electron paths are possible and the number of stages of amplification is indeterminate. The electron trajectories are scaled in proportion to the dimensions of the channel for a given applied voltage. Thus if the length to diameter ratio is kept constant the gain per channel remains constant, irrespective of the absolute length of the channel. For most applications the spatial resolution is important and in order to achieve the highest resolutions the channel diameters and the walls between channels are kept as small as possible.

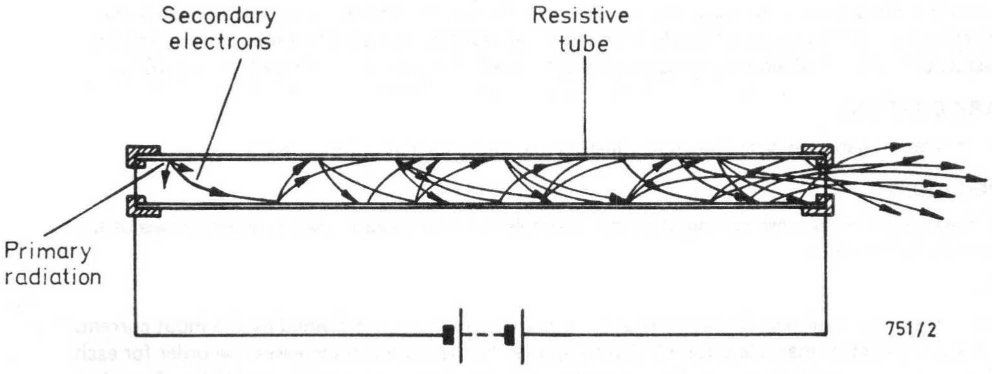

Fig.1 Electron multiplication.

IONIC FEEDBACK

The electron cloud at the output of the plate is sufficiently intense to generate an appreciable number of ions and these drift towards the input of the channel and, upon striking the wall, can produce a further burst of secondary electrons. This pulse, starting near the output, will be smaller than the first pulse, but may also generate ions which will drift backwards, so that a train of pulses is generated. This train of pulses alters the charge on the wall, which reduces the gain. This effect limits the voltage that can be applied to the plate and thus the gain that can be achieved. By placing two plates in cascade with the channels angled in opposite directions, ions fed back from the output plate cannot enter the input plate and high gain can be achieved without excessive ion feedback and consequent loss of linearity.

SATURATION DUE TO SPACE CHARGE

If the charge in the output pulse reaches about 10^8 electrons, the gain cannot increase further. The space charge in the output end of the channel repels secondary electrons, causing them to return to the wall without generating further electrons. When this occurs with an imaging application it will cause poor highlights and loss of detail. Imaging plates usually operate at gains of around 10^3.

SATURATION DUE TO FIELD DISTORTION

When the current in the output averages more than 10% of the total current, the voltage gradient in the wall is no longer linear and the gain falls so that there is a loss of linearity between input and output currents and a loss of highlights in the image.

SATURATION DUE TO FIELD EMISSION

It is important to keep channel plates scrupulously clean. Particles lodging in a channel can give rise to field emission which is multiplied in the channel and produces a permanently saturated condition. This is known as a switched-on channel and is a condition extremely difficult to correct.

→ PULSED OPERATION

If channel plates are required to be used in a pulsed mode, saturation will be more easily achieved by the use of double thickness plates (DT types), i.e. having a length to diameter ratio of 80:1. (See Fig.2).

RESISTANCE

The resistance of a channel plate is the value measured in vacuo between electrodes applied to the input and output faces.

→ OVERLOAD PROTECTION

Due to the characteristics of the glass, it is essential the power supplies should not be capable of delivering a current in excess of 1 mA. This can be achieved by the use of a series current limiting resistor, the value of which may be calculated as follows: $R = \text{operating voltage (max.)} \times 10^3\ \Omega$.

DARK CURRENT

Dark current is generally very low, much less than 1 count/sec/cm^2 of plate area.

OPEN AREA

Open area is the total cross section of all the channels in the plate expressed as a percentage of the total area of the plate.

GAIN

Gain in the linear region of operation is defined as the output current divided by the input current. This is always better than 1000 for 1000 volts applied to the plate and increases one order for each 200 V increase in applied voltage. The recommended operating voltage is 800 to 1200 V. Outside these limits spatial non-uniformity can become a problem.

MOUNTING

The opposite faces of channel plates are ground flat and parallel during manufacture. As the devices are fragile, care must be taken to ensure that they are not stressed unduly when mounting them in systems. It is recommended that they are placed between perfectly flat polished stainless steel rings spring loaded only sufficiently to ensure reliable connections to the metallized faces of the plate. A loading of 300 gms per cm of periphery has been found adequate. Care must be taken to minimize the possibility of leakage or other currents between the contact rings when the working voltage is applied.

OPERATING TEMPERATURE AND OUTGASSING

The devices can be operated up to maximum of 70 °C and degassed up to a maximum of 300 °C. Further evolution of gas may take place during operation. The pressure should never be allowed to rise above 13.3 $mN.m^{-2}$ while the operating voltage is applied, but exposure to the atmosphere for a few hours at a time does not cause any loss of performance. It is prudent to store devices in a well desiccated container if they have to be removed from the vacuum environment for longer periods. The devices may be damaged permanently if exposed to gross contamination by hydrocarbon vapours.

If the output is to be detected by means of a phosphor screen, it is desirable to place it as close to the channel plate as can be arranged, commensurate with voltage and mechanical considerations. The electrons leave the outputs over a very wide angle, and detail can be lost if the spacing is excessive. For similar reason a photocathode input source should be placed close to the input face.

A suitable distance for the channel plate-screen gap is 1 mm, with a potential between screen and channel plate output of about 5 kV. Either the screen distance or the screen potential may be adjusted in order to optimize the resolution of the system.

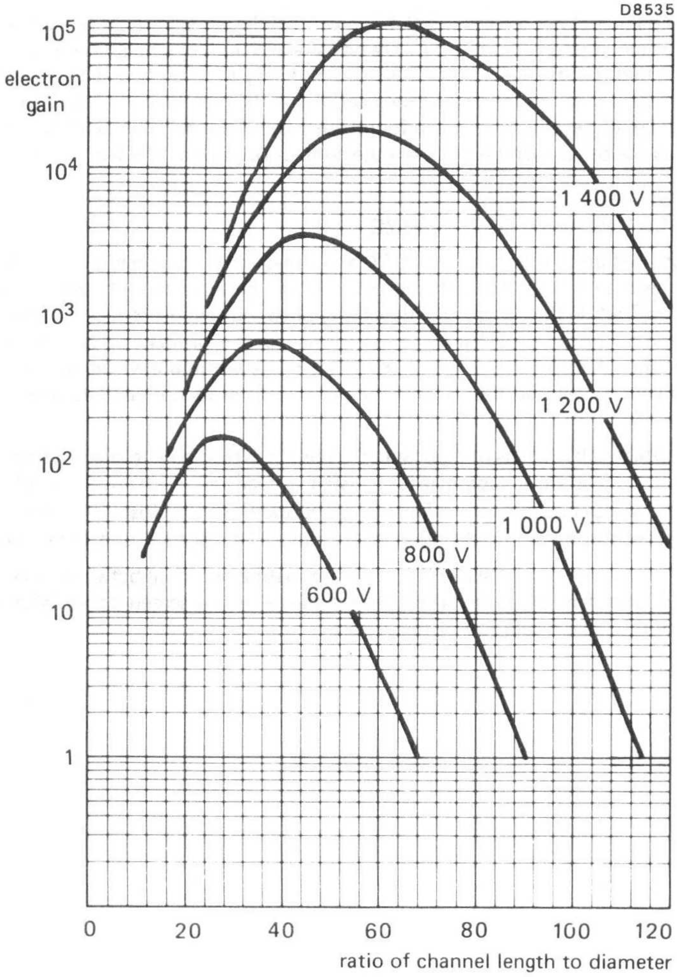
D8535
10^5
electron gain
10^4
10^3
10^2
10
1
1 400 V
1 200 V
1 000 V
800 V
600 V
0
20
40
60
80
100
120
ratio of channel length to diameter

Fig.2

CHANNEL ELECTRON MULTIPLIER PLATE

This consists of an array of channel electron multipliers fused into the shape of a rectangle. The multipliers are electrically connected in parallel by means of nickel-chromium electrodes evaporated on to the faces of the plate.

SPECIFICATION

Area of plate		$20^{+0}_{-0.2} \times 50^{+0}_{-0.2}$	mm
Useful area	min.	18.8 x 48.8	mm
Plate thickness		0.5 ± 0.1	mm
Channel diameter		12.5	μm
Channel pitch		15.0	μm
Open area	approx.	60	%
Electrode material		nickel-chromium	
Electrical resistance between electrodes		80 to 300	MΩ
Current gain at 1.0 kV	min.	10^3	
Angle of channel to perpendicular axis of plate		13	degrees

APPLICATIONS

This device must operate in a vacuum and may be used to detect electrons, ions, soft X-rays and ultraviolet photons falling on the input face of the plate, by producing electron pulses from the output face of the corresponding channel.

For space experiments, the environmental vacuum is adequate for its operation and it has considerable potential in the field of X-ray and ultra-violet astronomy from rockets and satellites. In laboratory use it must be incorporated in a vacuum chamber, where it will have important applications in field ion microscopy, electron microscopy and allied areas of research.

Such applications are fully discussed by P. Lecomte and V. Perez-Mendez in I.E.E.E. Transactions on Nuclear Science, Vol. NS–25, No.2 April 1978 – 'Channel Electron Multipliers: Properties, Development and Applications'.

RATINGS

Limiting values in accordance with the Absolute Maximum System (IEC134)

Operating voltage	max.	2.0	kV
Temperature* (operating and storage)	max.	70	°C
Bake temperature	max.	300	°C
Ambient pressure with high voltage applied	max.	13.3 1.0×10^{-4}	$mN.m^{-2}$ torr

---

*The plate should be stored in a dry or vacuum environment.

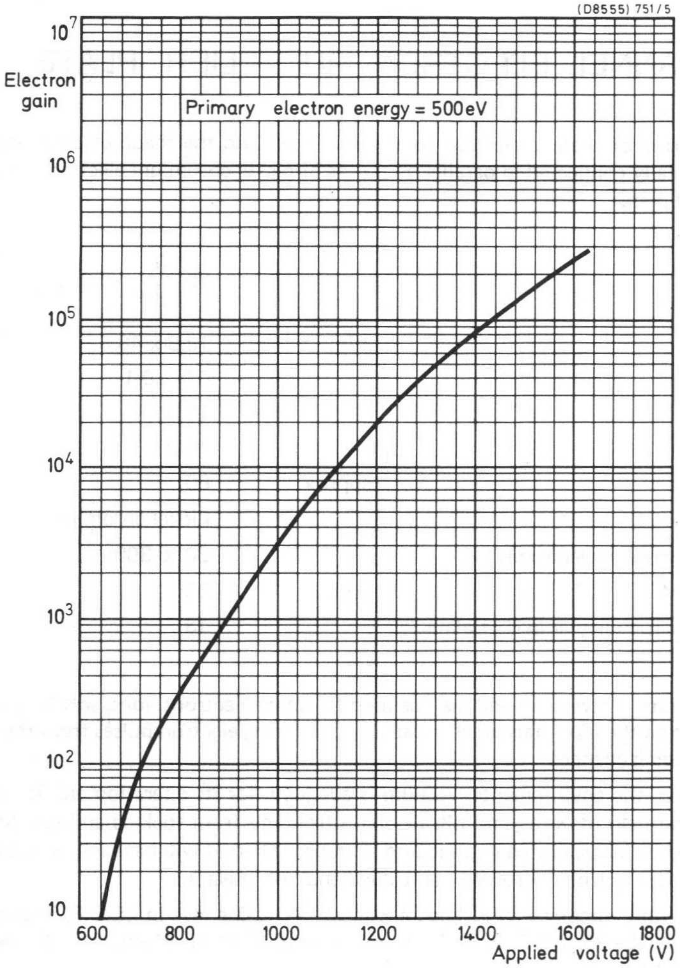

Fig. 1 Typical current gain as a function of applied voltage

MOUNTING

A channel plate is fragile and great care must be taken to ensure that it is not unduly stressed when mounted in the vacuum system. It is recommended that the plate is mounted between clean polished brass or stainless steel rings, giving noise-free electrical contacts. The device will withstand a contact pressure of at least 10^4 N.m^{-2} (corresponding to a load of ~1 g per mm^2) applied via screws pushing against small helical springs. Polished brass annular shims, about 1.5 mm wide and 50 µm thick, are recommended for insertion between plates operating in cascade. *

OVERLOAD PROTECTION

Due to the glass characteristics, it is essential that power supplies should not be capable of delivering a current in excess of 1 mA. This can be achieved by the use of a series current limiting resistor, the value of which may be calculated as follows:

$$R_p = \text{operating voltage (max.)} \times 10^3\ \Omega.$$

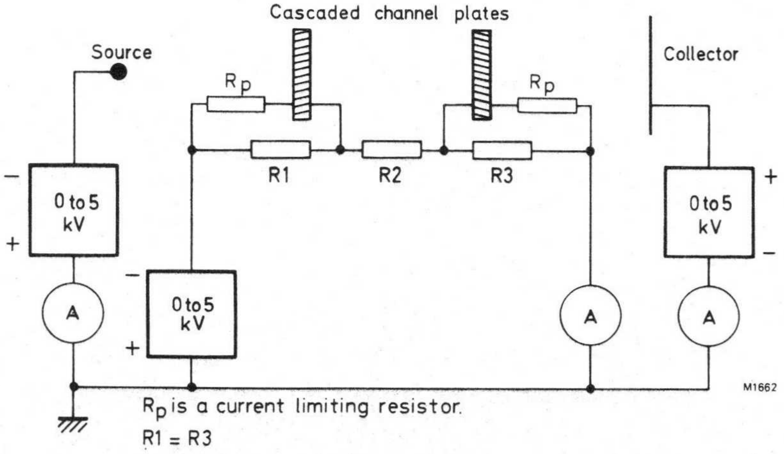

Fig.2 Circuit for cascaded channel plates

---

* Brass shims must not be used during the baking process otherwise Zinc contamination will occur.

SOLID EDGE CHANNEL ELECTRON MULTIPLIER PLATE

This consists of an array of channel electron multipliers fused into the shape of a disc with a solid edge. The multipliers are electrically connected in parallel by means of nickel-chromium electrodes evaporated on to the faces of the disc.

SPECIFICATION

Disc diameter		$25^{+0}_{-0.1}$	mm
Useful diameter	min.	19	mm
Disc thickness		0.5 ± 0.02	mm
Channel diameter	nom.	12.5	μm
Channel pitch	nom.	15.0	μm
Open area	approx.	60	%
Electrode material		nickel-chromium	
Electrical resistance between electrodes		200 to 750	MΩ
Current gain at 1.0 kV (see Fig.1)	>	1000	
Angle of channel to perpendicular axis of disc		13	degrees

For a linear relationship between input and output, the output current must not exceed 0.1 of the standing current.

APPLICATIONS

This device must operate in a vacuum and may be used to detect electrons, ions, soft X-rays and ultra-violet photons falling in the input face of the disc by producing electron pulses from the output face of the corresponding channel.

For space experiments, the environmental vacuum is adequate for its operation and it has considerable potential in the field of X-ray and ultra-violet astronomy from rockets and satellites. In laboratory use it must be incorporated in a vacuum chamber, where it will have important applications in field ion microscopy, electron microscopy and allied areas of research.

Such applications are fully discussed by P. Lecomte and V. Perez-Mendez in I.E.E.E. Transactions on Nuclear Science, Vol. NS–25, No.2 April 1978 – 'Channel Electron Multipliers: Properties, Development and Applications'.

RATINGS

Limiting values in accordance with the Absolute Maximum System (IEC134)

Operating voltage	max.	2.0	kV
Temperature** (operating and storage)	max.	70	^{o}C
Bake temperature	max.	300	^{o}C
Ambient pressure with high voltage applied	max.	13.3 (1.0×10^{-4} torr)	mN.m^{-2}

* The suffix /A denotes a pair of plates which are resistance matched for applications requring two plates in cascade, (see Fig.2).

** The plate should be stored in a dry or vacuum environment.

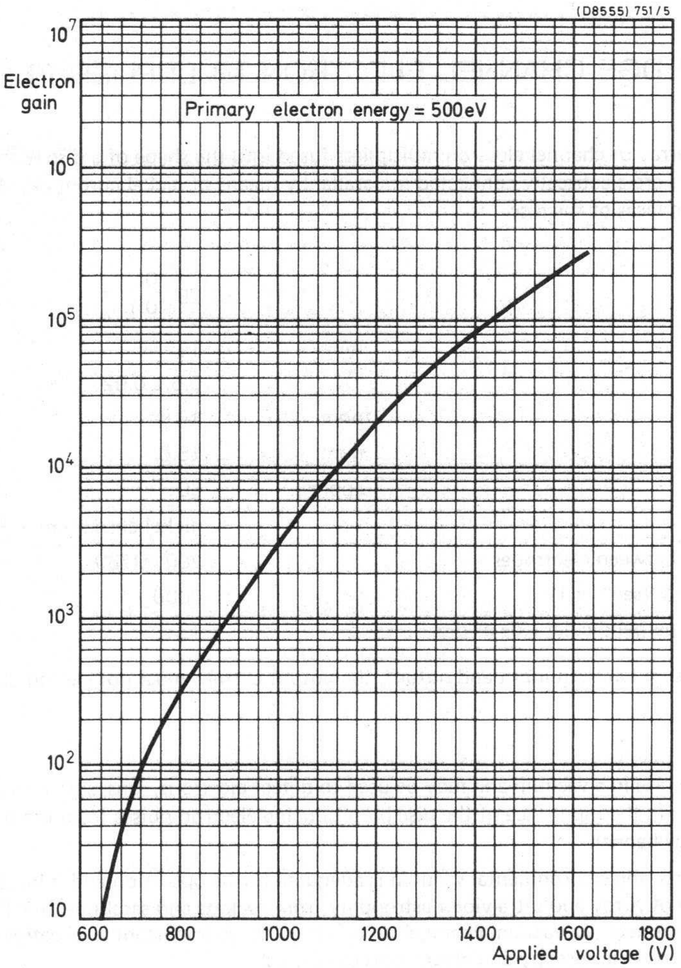

Fig.1 Typical current gain as a function of applied voltage.

MOUNTING

A channel plate is fragile and great care must be taken to ensure that it is not unduly stressed when mounted in the vacuum system. It is recommended that the plate is mounted between clean polished brass or stainless steel rings, giving noise-free electrical contacts. The device will withstand a contact pressure of at least 10^4 N.m^{-2} (corresponding to a load of ~1 g per mm^2) applied via screws pushing against small helical springs. Polished brass annular shims, about 1.5 mm wide and 50 μm thick, are recommended for insertion between plates operating in cascade.*

OVERLOAD PROTECTION

Due to the glass characteristics, it is essential that power supplies should not be capable of delivering a current in excess of 1 mA. This can be achieved by the use of a series current limiting resistor, the value of which may be calculated as follows:

$$R_p = \text{operating voltage (max.)} \times 10^3\ \Omega.$$

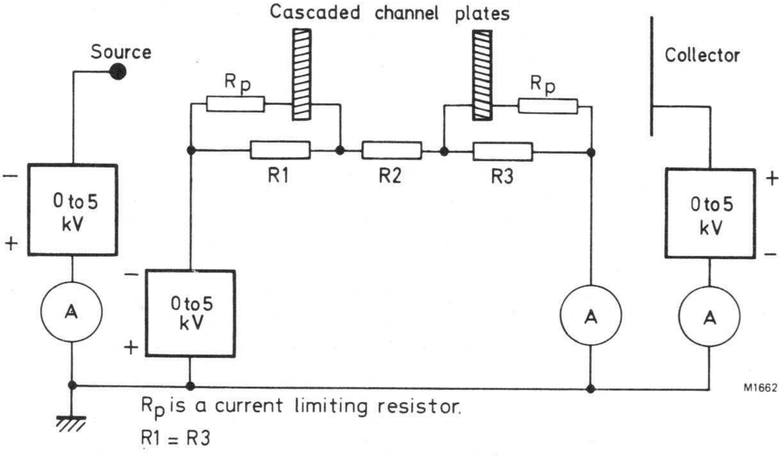

Fig.2 Circuit for cascaded channel plates

---

* Brass shims must not be used during the baking process otherwise Zinc contamination will occur.

CHANNEL ELECTRON MULTIPLIER PLATE

This consists of an array of channel electron multipliers fused into the shape a disc. The multipliers are electrically connected in parallel by means of nickel-chromium electrodes evaporated on to the faces of the disc.

SPECIFICATION

Disc diameter		$36^{+0}_{-0.1}$	mm
Useful diameter	min.	32.5	mm
Disc thickness		0.5 ± 0.02	mm
Channel diameter	nom.	12.5	μm
Channel pitch	nom.	15	μm
Open area	approx.	60	%
Electrode material		nickel-chromium	
Electrical resistance between electrodes		80 to 300	MΩ
Current gain at 1.0 kV (see Fig.1)	>	1000	
Angle of channel to perpendicular axis of disc		13	degrees

For a linear relationship between input and output, the output current must not exceed 0.1 of the standing current.

APPLICATIONS

This device must operate in a vacuum and may be used to detect electrons, ions, soft X-rays and ultra-violet photons falling on the input face of the disc by producing electron pulses from the output face of the corresponding channel.

For space experiments, the environmental vacuum is adequate for its operation and it has considerable potential in the field of X-ray and ultra-violet astronomy from rockets and satellites. In laboratory use it must be incorporated in a vacuum chamber, where it will have important applications in field ion microscopy, electron microscopy and allied areas of research.

Such applications are fully discussed by P. Lecomte and V. Perez-Mendez in I.E.E.E. Transactions on Nuclear Science, Vol. NS–25, No.2. April 1978 – 'Channel Electron Multipliers: Properties, Development and Applications'.

RATINGS

Limiting values in accordance with the Absolute Maximum System (IEC134)

Operating voltage	max.	2.0	kV
Temperature ** (operating and storage)	max.	70	^{o}C
Bake temperature	max.	300	^{o}C
Ambient pressure with high voltage applied	max.	13.3 (1.0×10^{-4} torr)	mN.m^{-2}
Plate clamping rings internal diameter	max.	33	mm

* The suffix /A denotes a pair of plates which are resistance matched for applications requiring two plates in cascade, (see Fig.2).

** The plate should be stored in a dry or vacuum environment.

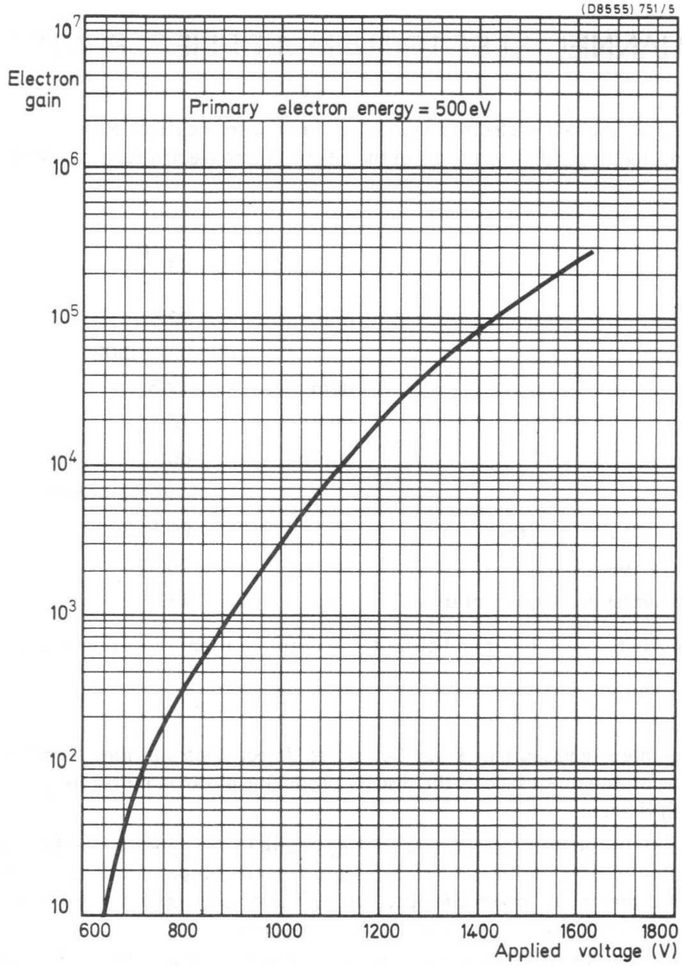

Fig. 1 Typical current gain as a function of applied voltage.

MOUNTING

A channel plate is fragile and great care must be taken to ensure that it is not unduly stressed when mounted in the vacuum system. It is recommended that the plate is mounted between clean polished brass or stainless steel rings, giving noise-free electrical contacts. The device will withstand a contact pressure of at least 10^4 N.m^{-2} (corresponding to a load of ~1 g per mm^2) applied via screws pushing against small helical springs. Polished brass annular shims, about 1.5 mm wide and 50 μm thick, are recommended for insertion between plates operating in cascade.*

OVERLOAD PROTECTION

Due to the glass characteristics, it is essential that power supplies should not be capable of delivering a current in excess of 1 mA. This can be achieved by the use of a series current limiting resistor, the value of which may be calculated as follows:

$$R_p = \text{operating voltage (max.)} \times 10^3\ \Omega.$$

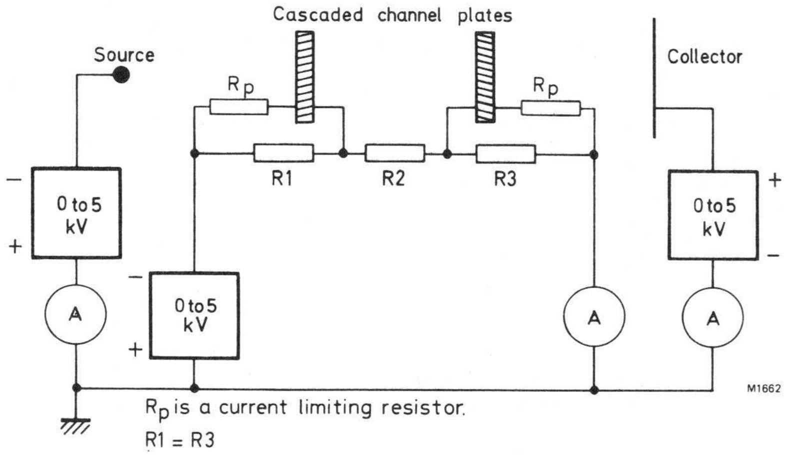

Rp is a current limiting resistor.
R1 = R3

Fig.2 Circuit for cascaded channel plates

---

* Brass shims must not be used during the baking process otherwise Zinc contamination will occur.

CHANNEL ELECTRON MULTIPLIER PLATES

Each plate consists of an array of channel electron multipliers fused into the shape of a disc. The multipliers are electrically connected in parallel by means of nickel-chromium electrodes evaporated on to the faces of the disc. These plates have been specially developed for use in pairs in the pulse detection mode for X-rays and other types of radiation. The suffix DT indicates double thickness. The G12-36DT/0 is cut so that the channels form an angle of 0 degrees to the perpendicular axis; in the G12-36DT/13 the channels form an angle of 13° to the perpendicular axis.

SPECIFICATION

Disc diameter		$36^{+0}_{-0.1}$	mm
Useful diameter	min.	32.5	mm
Disc thickness		1.0 ± 0.02	mm
Channel diameter	nom.	12.5	µm
Channel pitch	nom.	15.0	µm
Open area	approx.	60	%
Electrode material		nickel-chromium	
Electrical resistance between electrodes		200 to 600	MΩ
Length to diameter ratio		80:1	
Current gain (pair of plates at 1.2 kV/plate)	nom.	$>10^6$	

APPLICATIONS

These devices must operate in a vacuum and may be used to detect electrons, ions, soft X-rays and ultra-violet photons falling on the input face of the disc, by producing electron pulses from the output face of the corresponding channel.

For space experiments, the environmental vacuum is adequate for their operation and they have considerable potential in the field of X-ray and ultra-violet astronomy from rockets and satellites. In laboratory use they must be incorporated in a vacuum chamber, where they will have important applications in field ion microscopy, electron microscopy and allied areas of research.

Such applications are fully discussed by P. Lecomte and V. Perez-Mendez in I.E.E.E. Transactions on Nuclear Science, Vol. NS–25, No.2 April 1978 – 'Channel Electron Multipliers: Properties, Development and Applications'.

RATINGS

Limiting values in accordance with the Absolute Maximum System (IEC134)

Operating voltage (pair of plates)	max.	6.0	kV
Operating voltage (single plate)	max.	3.0	kV
Temperature* (operating and storage)	max.	70	°C
Bake temperature	max.	300	°C
Ambient pressure with high voltage applied	max.	13.3 (1.0×10^{-4} torr)	$mN.m^{-2}$
Plate clamping rings internal diameter	max.	33	mm

*The plate should be stored in a dry or vacuum environment.

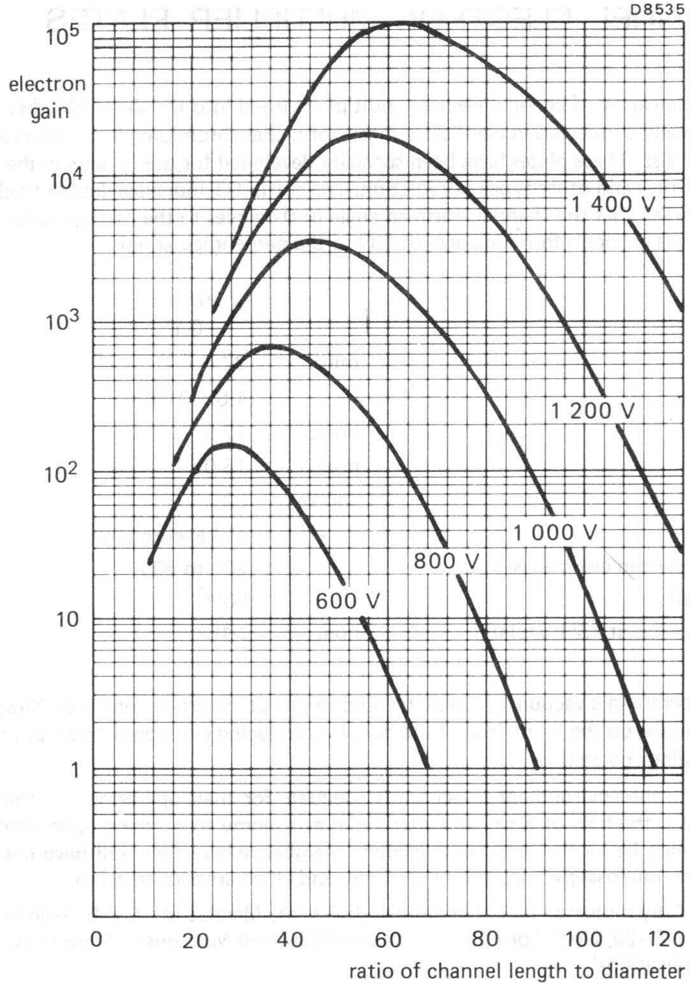

Fig.1 Typical universal gain curves

MOUNTING

Channel plates are fragile and great care must be taken to ensure that they are not unduly stressed when mounted in the vacuum system. It is recommended that the plates are mounted between clean polished brass or stainless steel rings, giving noise-free electrical contacts. The devices will withstand a contact pressure of at least 10^4 N.m^{-2} (corresponding to a load of ~1 g per mm^2) applied via screws pushing against small helical springs. Polished brass annular shims, about 1.5 mm wide and 50 μm thick, are recommended for insertion between plates operating in cascade.*

OVERLOAD PROTECTION

Due to the glass characteristics, it is essential that power supplies should not be capable of delivering a current in excess of 1 mA. This can be achieved by the use of a series current limiting resistor, the value of which may be calculated as follows:

$$R_p = \text{operating voltage (max.)} \times 10^3\ \Omega.$$

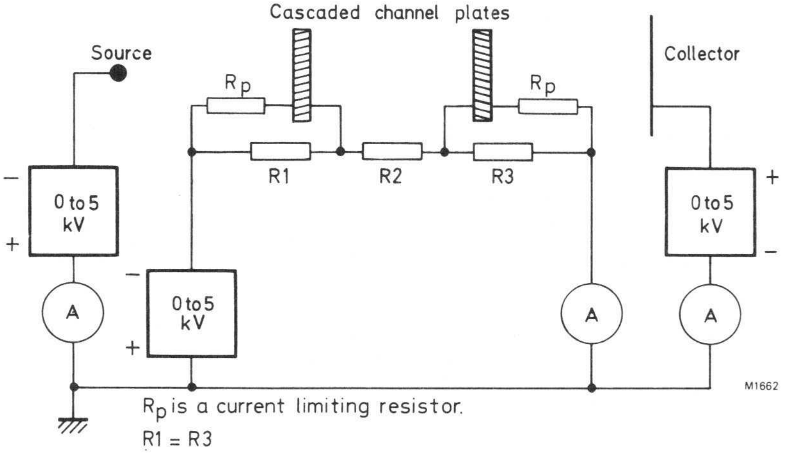

Fig.2 Circuit for cascaded channel plates

---

* Brass shims must not be used during the baking process otherwise Zinc contamination will occur.

CHANNEL ELECTRON MULTIPLIER PLATE

This consists of an array of channel electron multipliers fused into the shape of a disc. The multipliers are electrically connected in parallel by means of nickel-chromium electrodes evaporated on to the faces of the disc.

SPECIFICATION

Disc diameter		$46^{+0}_{-0.1}$	mm
Useful diameter	min.	42	mm
Disc thickness		0.5 ± 0.02	mm
Channel diameter	nom.	12.5	μm
Channel pitch	nom.	15.0	μm
Open area	approx.	60	%
Electrode material		nickel-chromium	
Electrical resistance between electrodes		30 to 100	MΩ
Current gain at 1.0 kV (see Fig.1)	>	1000	
Angle of channel to perpendicular axis of disc		13	degrees

For a linear relationship between input and output, the output current must not exceed 0.1 of the standing current.

APPLICATIONS

This device must operate in a vacuum and may be used to detect electrons, ions, soft X-rays and ultra-violet photons falling on the input face of the disc, by producing electron pulses from the output face of the corresponding channel.

For space experiments, the environmental vacuum is adequate for its operation and it has considerable potential in the field of X-ray and ultra-violet astronomy from rockets and satellites. In laboratory use it must be incorporated in a vacuum chamber, where it will have important applications in field ion microscopy, electron microscopy and allied areas of research

Such applications are fully discussed by P. Lecomte and V. Perez-Mendez in I.E.E.E. Transactions on Nuclear Science, Vol. NS–25, No.2 April 1978 – 'Channel Electron Multipliers: Properties, Development and Applications'.

RATINGS

Limiting values in accordance with the Absolute Maximum System (IEC134)

Operating voltage	max.	1.5	kV
Temperature** (operating and storage)	max.	70	^{o}C
Bake temperature	max.	300	^{o}C
Ambient pressure with high voltage applied		13.3 (1.0×10^{-4}) torr	mN.m^{-2}
Plate clamping rings internal diameter	max.	42.5	mm

* The suffix/A denotes a pair of plates which are resistance matched for applications requiring two plates in cascade, (see Fig.2).

** The plate should be stored in a dry vacuum environment.

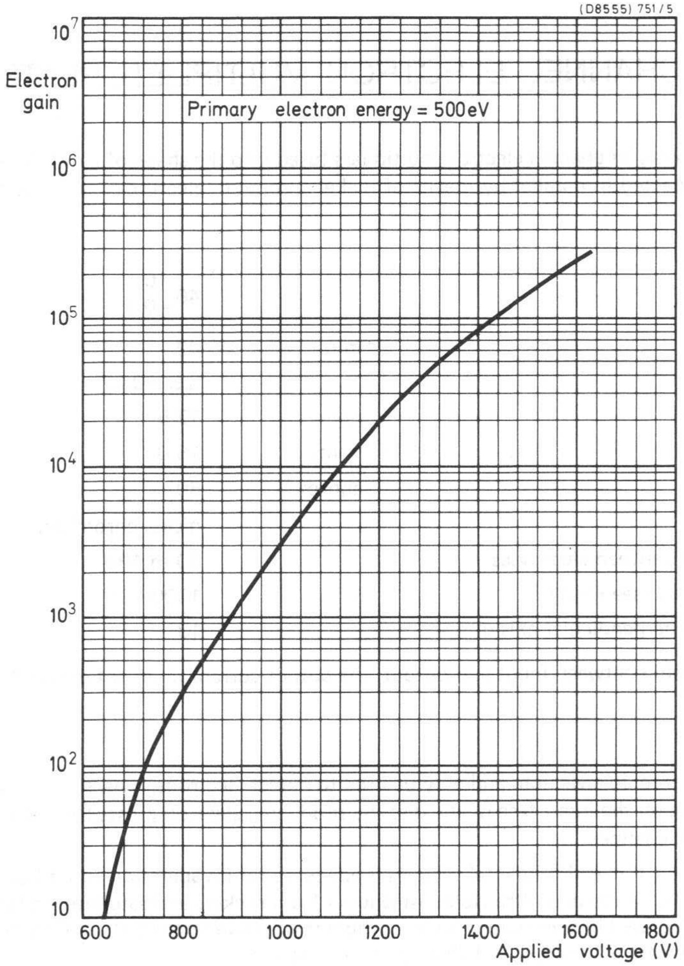

Fig.1 Typical current gain as a function of applied voltage

MOUNTING

A channel plate is fragile and great care must be taken to ensure that it is not unduly stressed when mounted in the vacuum system. It is recommended that the plate is mounted between clean polished brass or stainless steel rings, giving noise-free electrical contacts. The device will withstand a contact pressure of at least 10^4 N.m^{-2} (corresponding to a load of ~1 g per mm^2) applied via screws pushing against small helical springs. Polished brass annular shims, about 1.5 mm wide and 50 μm thick, are recommended for insertion between plates operating in cascade.*

OVERLOAD PROTECTION

Due to the glass characteristics, it is essential that power supplies should not be capable of delivering a current in excess of 1 mA. This can be achieved by the use of a series current limiting resistor, the value of which may be calculated as follows:

$$R_p = \text{operating voltage (max.)} \times 10^3\ \Omega.$$

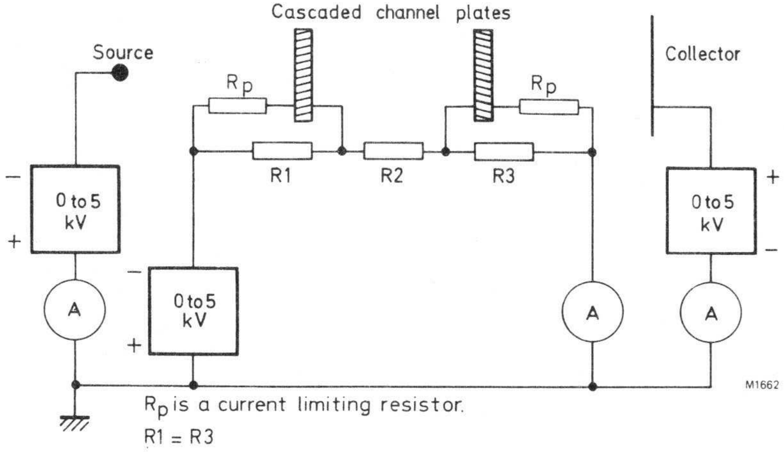

Fig.2 Circuit for cascaded channel plates

---

* Brass shims must not be used during the baking process otherwise Zinc contamination will occur.

CHANNEL ELECTRON MULTIPLIER PLATES

Each plate consists of an array of channel electron multipliers fused into the shape of a disc. The multipliers are electrically connected in parallel by means of nickel-chromium electrodes evaporated on to the faces of the disc. These plates have been specially developed for use in pairs in the pulse detection mode for X-rays and other types of radiation. The suffix DT indicates double thickness. The G12-46DT/0 is cut so that the channels form an angle of 0 degrees to the perpendicular axis; in the G12-46DT/13 the channels form an angle of 13° to the perpendicular axis.

SPECIFICATION

Disc diameter		$46^{+0}_{-0.1}$	mm
Useful diameter	min.	42	mm
Disc thickness		1.0 ± 0.02	mm
Channel diameter	nom.	12.5	μm
Channel pitch	nom.	15.0	μm
Open area	approx.	60	%
Electrode material		nickel-chromium	
Electrical resistance between electrodes		60 to 250	MΩ
Length to diameter ratio		80:1	
Current gain (pair of plates at 1.2 kV/plate)	nom.	$> 10^6$	

APPLICATIONS

These devices must operate in a vacuum and may be used to detect electrons, ions, soft X-rays and ultraviolet photons falling on the input face of the disc, by producing electron pulses from the output face of the corresponding channel.

For space experiments, the environmental vacuum is adequate for their operation and they have considerable potential in the field of X-ray and ultra-violet astronomy from rockets and satellites. In laboratory use they must be incorporated in a vacuum chamber, where they will have important applications in field ion microscopy, electron microscopy and allied areas of research.

Such applications are fully discussed by P. Lecomte and V. Perez-Mendez in I.E.E.E. Transactions on Nuclear Science, Vol. NS–25, No.2 April 1978 – 'Channel Electron Multipliers: Properties, Development and Applications'.

RATINGS

Limiting values in accordance with the Absolute Maximum System (IEC134)

Operating voltage (pair of plates)	max.	6.0	kV
Operating voltage (single plate)	max.	3.0	kV
Temperature* (operating and storage)	max.	70	°C
Bake temperature	max.	300	°C
Ambient pressure with high voltage applied	max.	13.3 (1.0×10^{-4} torr)	$mN.m^{-2}$
Plate clamping rings internal diameter	max.	42.5	mm

*This plate should be stored in a dry or vacuum environment.

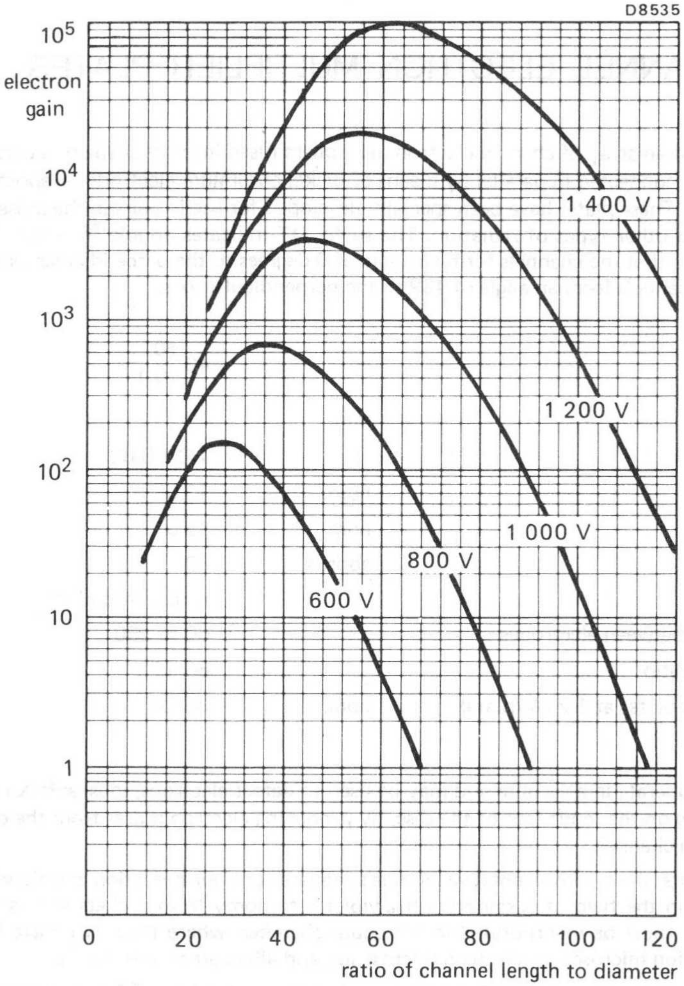

Fig.1 Typical universal gain curves

MOUNTING

Channel plates are fragile and great care must be taken to ensure that they are not unduly stressed when mounted in the vacuum system. It is recommended that the plates are mounted between clean polished brass or stainless steel rings, giving noise-free electrical contacts. The devices will withstand a contact pressure of at least 10^4 N.m^{-2} (corresponding to a load of ~1 g per mm^2) applied via screws pushing against small helical springs. Polished brass annular shims, about 1.5 mm wide and 50 μm thick, are recommended for insertion between plates operating in cascade.*

OVERLOAD PROTECTION

Due to the glass characteristics, it is essential that power supplies should not be capable of delivering a current in excess of 1 mA. This can be achieved by the use of a series current limiting resistor, the value of which may be calculated as follows:

$$R_p = \text{operating voltage (max.)} \times 10^3\ \Omega.$$

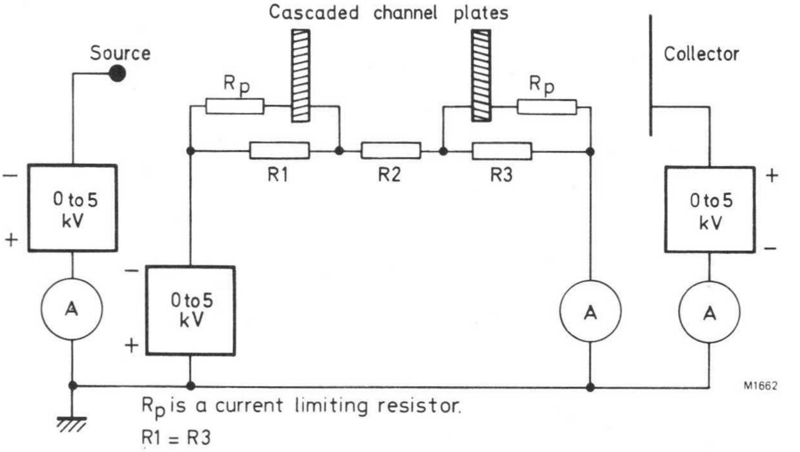

Fig.2 Circuit for cascaded channel plates

---

* Brass shims must not be used during the baking process otherwise Zinc contamination will occur.

CHANNEL ELECTRON MULTIPLIER PLATE

This consists of an array of channel electron multipliers fused into the shape of a disc. The multipliers are electrically connected in parallel by means of nickel-chromium electrodes evaporated on to the faces of the disc.

SPECIFICATION

Disc diameter		$70.0^{+0}_{-0.1}$	mm
Useful diameter	min.	67	mm
Disc thickness		0.5 ± 0.02	mm
Channel diameter	nom.	12.5	μm
Channel pitch	nom.	15	μm
Open area	approx.	60	%
Electrode material		nickel-chromium	
Electrical resistance between electrodes	approx.	20	MΩ
Current gain at 1.0 kV (see Fig.1)	>	1000	
Angle of channel to perpendicular axis of plate		13	degrees

For a linear relationship between input and output, the output current must not exceed 0.1 of the standing current.

APPLICATIONS

This device must operate in a vacuum and may be used to detect electrons, ions, soft X-rays and ultra-violet photons falling in the input face of the plate, by producing electron pulses from the output face of the corresponding channel.

For space experiments, the environmental vacuum is adequate for its operation and it has considerable potential in the field of X-ray and ultra-violet astronomy from rockets and satellites. In laboratory use it must be incorporated in a vacuum chamber, where it will have important applications in field ion microscopy, electron microscopy and allied areas of research.

Such applications are fully discussed by P. Lecomte and V. Perez-Mendez in I.E.E.E. Transactions on Nuclear Science, Vol. NS–25, No.2 April 1978 – 'Channel Electron Multipliers: Properties, Development and Applications'.

RATINGS

Limiting values in accordance with the Absolute Maximum System (IEC134)

Operating voltage	max.	1.5	kV
Temperature* (operating and storage)	max.	70	°C
Bake temperature	max.	300	°C
Ambient pressure with high voltage applied	max.	13.3 (1.0×10^{-4} torr)	$mN.m^{-2}$
Plate clamping rings internal diameter	max.	67.5	mm

*The plate should be stored in a dry or vacuum environment.

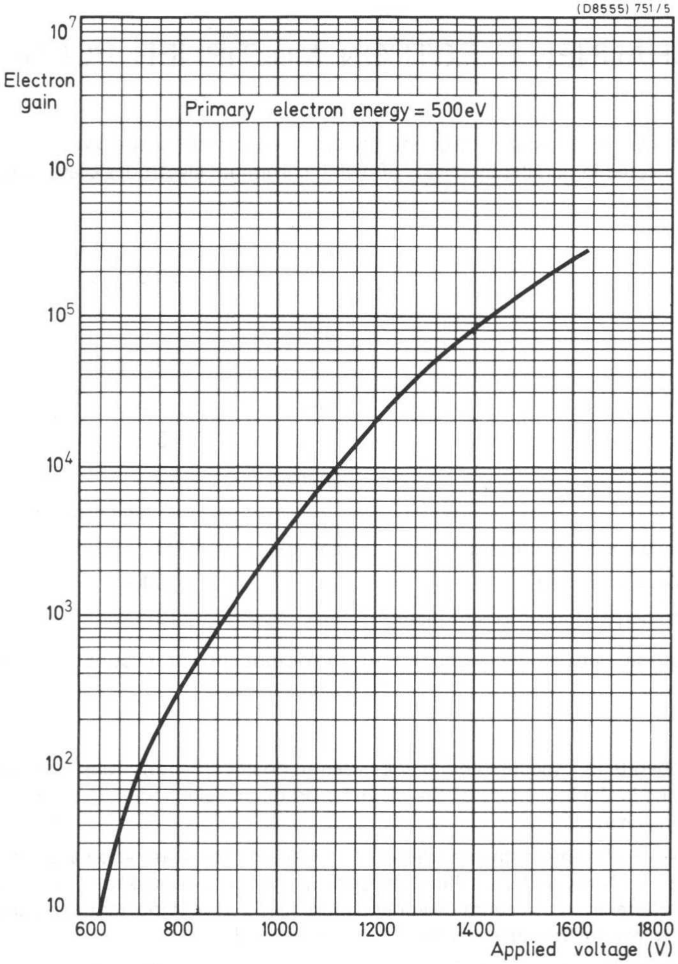

Fig. 1 Typical current gain as a function of applied voltage

MOUNTING

A channel plate is fragile and great care must be taken to ensure that it is not unduly stressed when mounted in the vacuum system. It is recommended that the plate is mounted between clean polished brass or stainless steel rings, giving noise-free electrical contacts. The device will withstand a contact pressure of at least 10^4 N.m^{-2} (corresponding to a load of ~1 g per mm^2) applied via screws pushing against small helical springs. Polished brass annular shims, about 1.5 mm wide and 50 μm thick, are recommended for insertion between plates operating in cascade.*

OVERLOAD PROTECTION

Due to the glass characteristics, it is essential that power supplies should not be capable of delivering a current in excess of 1 mA. This can be achieved by the use of a series current limiting resistor, the value of which may be calculated as follows:

$$R_p = \text{operating voltage (max.)} \times 10^3\ \Omega.$$

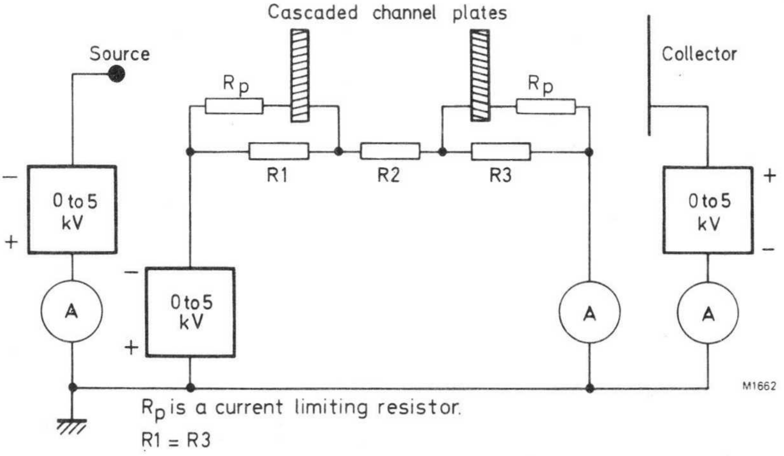

Fig.2 Circuit for cascaded channel plates

---

* Brass shims must not be used during the baking process otherwise Zinc contamination will occur. ←

CHANNEL ELECTRON MULTIPLIER PLATE

This consists of an array of channel electron multipliers fused into the shape of a rectangle. The multipliers are electrically connected in parallel by means of nickel-chromium electrodes evaporated on to the faces of the plate.

SPECIFICATION

Area of plate		$20^{+0}_{-0.2} \times 50^{+0}_{-0.2}$	mm
Useful area	min.	18.8 x 48.8	mm
Plate thickness		1 ± 0.1	mm
Channel diameter		25	μm
Channel pitch		31	μm
Open area	approx.	60	%
Electrode material		nickel-chromium	
Electrical resistance between electrodes	nom.	35	MΩ
Current gain at 1.0 kV	min.	10^3	
Angle of channel to perpendicular axis of plate		13	degrees

APPLICATIONS

This device must operate in a vacuum and may be used to detect electrons, ions, soft X-rays and ultra-violet photons falling on the input face of the plate, by producing electron pulses from the output face of the corresponding channel.

For space experiments, the environmental vacuum is adequate for its operation and it has considerable potential in the field of X-ray and ultra-violet astronomy from rockets and satellites. In laboratory use it must be incorporated in a vacuum chamber, where it will have important applications in field ion microscopy, electron microscopy and allied areas of research.

Such applications are fully discussed by P. Lecomte and V. Perez-Mendez in I.E.E.E. Transactions on Nuclear Science, Vol. NS–25, No.2 April 1978 – 'Channel Electron Multipliers: Properties, Development and Applications'.

RATINGS

Limiting values in accordance with the Absolute Maximum System (IEC134)

Operating voltage	max.	2.0	kV
Temperature* (operating and storage)	max.	70	^{o}C
Bake temperature	max.	300	^{o}C
Ambient pressure with high voltage applied	max.	13.3 1.0×10^{-4}	mN.m^{-2} torr

---

*The plate should be stored in a dry or vacuum environment.

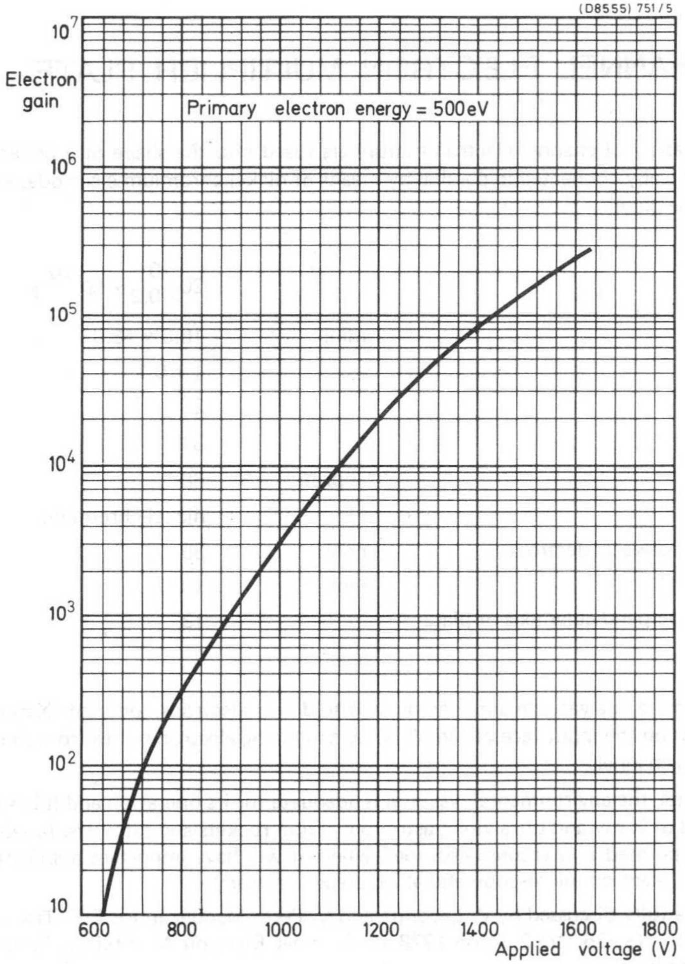

Fig. 1 Typical current gain as a function of applied voltage.

MOUNTING

A channel plate is fragile and great care must be taken to ensure that it is not unduly stressed when mounted in the vacuum system. It is recommended that the plate is mounted between clean polished brass or stainless steel rings, giving noise-free electrical contacts. The device will withstand a contact pressure of at least 10^4 N.m^{-2} (corresponding to a load of ~1 g per mm^2) applied via screws pushing against small helical springs. Polished brass annular shims, about 1.5 mm wide and 50 μm thick, are recommended for insertion between plates operating in cascade.*

OVERLOAD PROTECTION

Due to the glass characteristics, it is essential that power supplies should not be capable of delivering a current in excess of 1 mA. This can be achieved by the use of a series current limiting resistor, the value of which may be calculated as follows:

$$R_p = \text{operating voltage (max.)} \times 10^3\ \Omega.$$

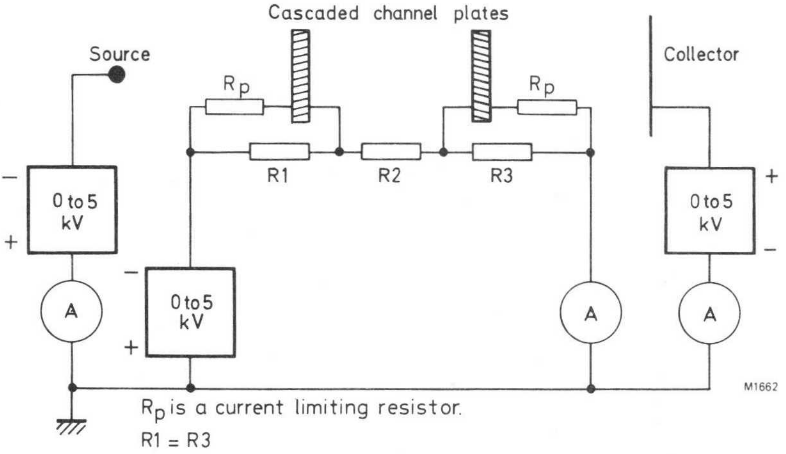

Fig.2 Circuit for cascaded channel plates

---

* Brass shims must not be used during the baking process otherwise Zinc contamination will occur. ←

CHANNEL ELECTRON MULTIPLIER PLATE

This consists of an array of channel electron multipliers fused into the shape of a disc. The multipliers are electrically connected in parallel by means of nickel-chromium electrodes evaporated on to the faces of the disc.

SPECIFICATION

Diameter of disc		27.1 ± 0.1	mm
Useful diameter	min.	26.5	mm
Disc thickness		1.0 ± 0.1	mm
Channel diameter		25	μm
Channel pitch		31	μm
Open area	approx.	60	%
Electrode material		nickel chromium	
Electrical resistance between electrodes		30 to 150	MΩ
Current gain at 1.0 kV (see Fig.1)	>	1000	
Maximum current output at 1.0 kV for linear operation		1.0	μA
Angle of channel to perpendicular axis of plate		13	degrees

APPLICATIONS

This device must operate in a vacuum, and may be used to detect electrons, ions, soft X-rays and ultra-violet photons falling on the input face of the disc, by producing electron pulses from the output face of the corresponding channel.

For space experiments the environmental vacuum is adequate for its operation, and it has considerable potential in the field of X-ray and ultra-violet astronomy from rockets and satellites.

In laboratory use it must be incorporated in a vacuum chamber, where it will have important applications in field ion microscopy, electron microscopy and allied areas of work.

Such applications are fully discussed by P. Lecomte and V. Perez-Mendez in I.E.E.E. Transactions on Nuclear Science, Vol. NS–25, No.2 April 1978 – 'Channel Electron Multipliers: Properties, Development and Applications'.

RATINGS

Limiting values in accordance with the Absolute Maximum System (IEC134)

Operating voltage	max.	2.0	kV
Temperature** (operating and storage)	max.	70	^oC
Bake temperature	max.	300	^oC
Ambient pressure with high voltage applied	max.	13.3 (1.0×10^{-4} torr)	$mN.m^{-2}$
Plate clamping rings diameter	max.	26.6	mm

* The suffix /A denotes a pair of plates which are resistance matched for applications requiring two plates in cascade, (see Fig.2).

** The plate should be stored in a dry or vacuum environment.

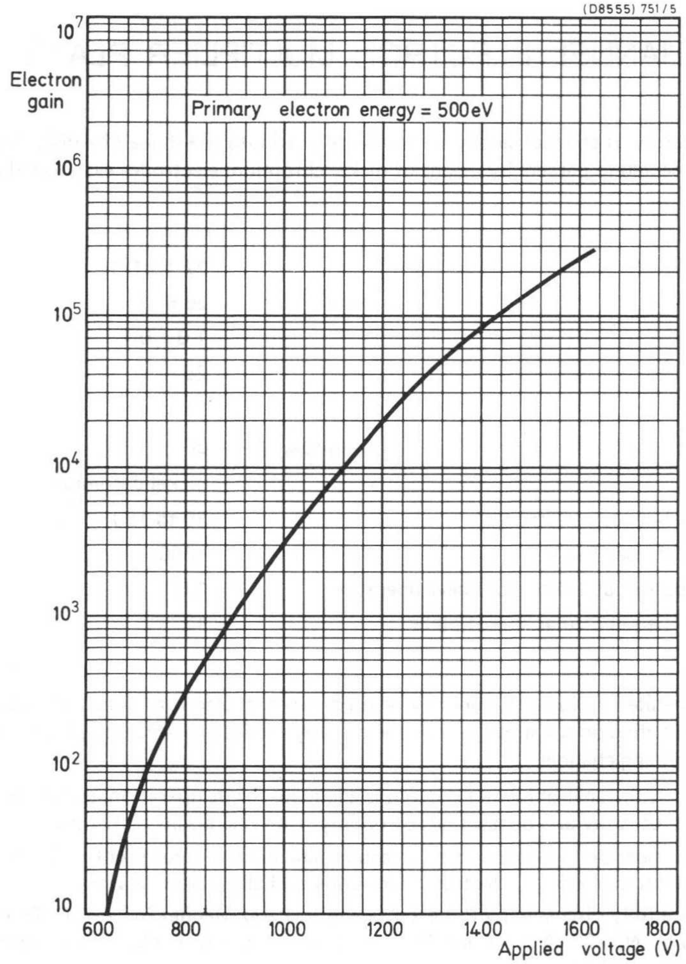

Fig. 1 Typical current gain as a function of applied voltage.

MOUNTING

A channel plate is fragile and great care must be taken to ensure that it is not unduly stressed when mounted in the vacuum system. It is recommended that the plate is mounted between clean polished brass or stainless steel rings, giving noise-free electrical contacts. The device will withstand a contact pressure of at least 10^4 N.m^{-2} (corresponding to a load of ~1 g per mm^2) applied via screws pushing against small helical springs. Polished brass annular shims, about 1.5 mm wide and 50 µm thick, are recommended for insertion between plates operating in cascade.*

OVERLOAD PROTECTION

Due to the glass characteristics, it is essential that power supplies should not be capable of delivering a current in excess of 1 mA. This can be achieved by the use of a series current limiting resistor, the value of which may be calculated as follows:

$$R_p = \text{operating voltage (max.)} \times 10^3\ \Omega.$$

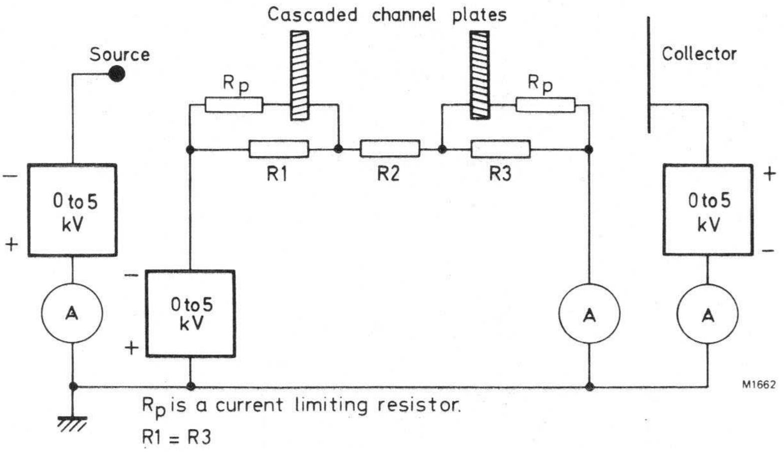

Fig.2 Circuit for cascaded channel plates

---

* Brass shims must not be used during the baking process otherwise Zinc contamination will occur. ←

See also G12-46

CHANNEL ELECTRON MULTIPLIER PLATE

This consists of an array of channel electron multipliers fused into the shape of a disc. The multipliers are electrically connected in parallel by means of nickel-chromium electrodes evaporated on to the faces of the disc.

SPECIFICATION

Diameter of disc		$53.0^{+0}_{-0.2}$	mm
Useful diameter	min.	51.8	mm
Thickness		1.0 ± 0.1	mm
Channel diameter		25	μm
Channel pitch		31	μm
Open area	approx.	60	%
Electrode material		nickel-chromium	
Electrical resistance between electrodes		7 to 40	MΩ
Current gain at 1.0 kV (see Fig.1)	>	1000	
Angle of channel to perpendicular axis of plate		13	degrees

For linear relationship between input and output the output current must not exceed 0.1 of the standing current.

APPLICATIONS

This device must operate in a vacuum, and may be used to detect electrons, ions, soft X-rays and ultraviolet photons falling on the input face of the disc, by producing electron pulses from the output face of the corresponding channel.

For space experiments the environmental vacuum is adequate for its operation.

In laboratory use it must be incorporated in a vacuum chamber, where it will have important applications in field ion microscopy, electron microscopy and allied areas of work.

Such applications are fully discussed by P. Lecomte and V. Perez-Mendez in I.E.E.E. Transactions on Nuclear Science, Vol. NS–25, No.2 April 1978 – 'Channel Electron Multipliers: Properties, Development and Applications'.

RATINGS

Limiting values in accordance with the Absolute Maximum System (IEC134)

Operating voltage	max.	2.0	kV
Temperature* (operating and storage)	max.	70	^{o}C
Bake temperature	max.	300	^{o}C
Ambient pressure with high voltage applied	max.	13.3 (1.0×10^{-4} torr)	mN.m^{-2}
Plate clamping rings diameter	max.	52.4	mm

---

*The plate should be stored in a dry or vacuum environment.

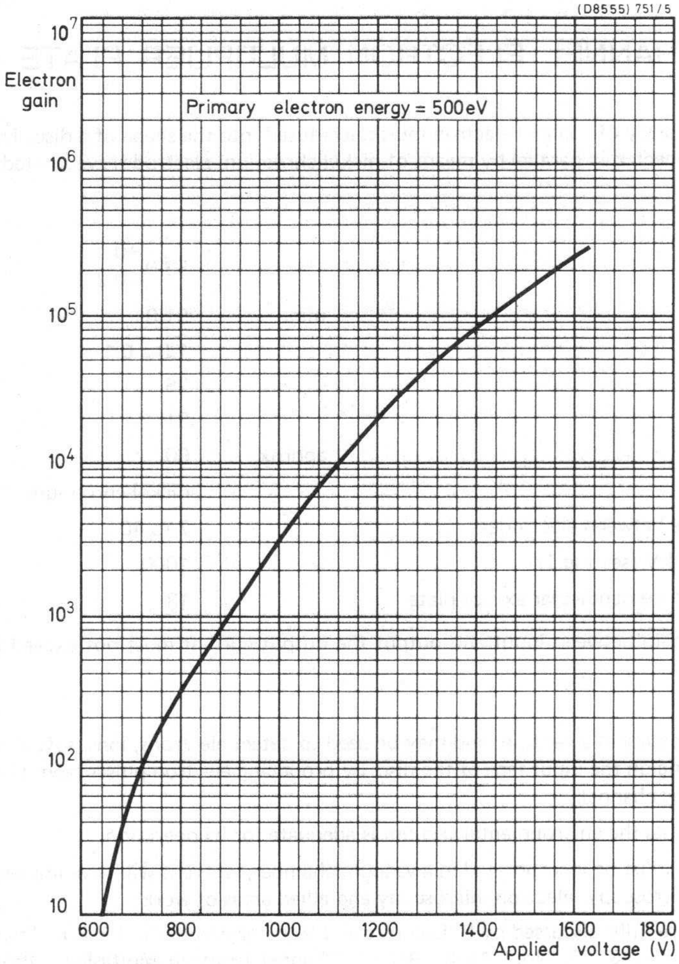

Fig. 1 Typical current gain as a function of applied voltage

MOUNTING

A channel plate is fragile and great care must be taken to ensure that it is not unduly stressed when mounted in the vacuum system. It is recommended that the plate is mounted between clean polished brass or stainless steel rings, giving noise-free electrical contacts. The device will withstand a contact pressure of at least 10^4 N.m^{-2} (corresponding to a load of ~1 g per mm^2) applied via screws pushing against small helical springs. Polished brass annular shims, about 1.5 mm wide and 50 μm thick, are recommended for insertion between plates operating in cascade.*

OVERLOAD PROTECTION

Due to the glass characteristics, it is essential that power supplies should not be capable of delivering a current in excess of 1 mA. This can be achieved by the use of a series current limiting resistor, the value of which may be calculated as follows:

$$R_p = \text{operating voltage (max.)} \times 10^3\ \Omega.$$

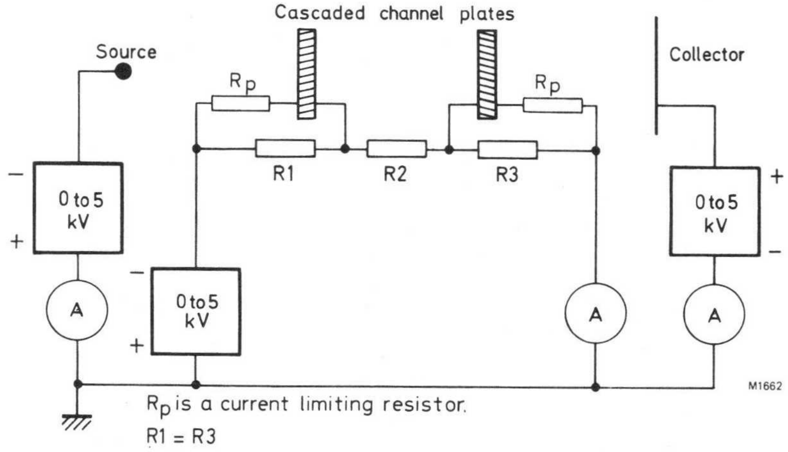

Fig.2 Circuit for cascaded channel plates

---

* Brass shims must not be used during the baking process otherwise Zinc contamination will occur.

Replaced by G12-70

CHANNEL ELECTRON MULTIPLIER PLATE

This consists of an array of channel electron multipliers fused into the shape of a disc. The multipliers are electrically connected in parallel by means of nickel-chromium electrodes evaporated on to the faces of the disc.

SPECIFICATION

Diameter of disc		$70.0^{+0}_{-0.2}$	mm
Useful diameter	min.	68.0	mm
Disc thickness		1.0 ± 0.1	mm
Channel diameter		25	μm
Channel pitch		31	μm
Open area	approx.	60	%
Electrode material		nickel-chromium	
Electrical resistance between electrodes	nom.	5	MΩ
Current gain at 1.0 kV (see Fig.1)	>	1000	
Angle of channel to perpendicular axis of plate		13	degrees

For linear relationship between input and output the output current must not exceed 0.1 of the standing current.

APPLICATIONS

This device must operate in a vacuum and may be used to detect electrons, ions, soft X-rays and ultra-violet photons falling on the input face of the disc, by producing electron pulses from the output face of the corresponding channel.

For space experiments the environmental vacuum is adequate for its operation.

In laboratory use it must be incorporated in a vacuum chamber, where it will have important applications in field ion microscopy, electron microscopy and allied areas of work.

Such applications are fully discussed by P. Lecomte and V. Perez-Mendez in I.E.E.E. Transactions on Nuclear Science, Vol. NS–25, No.2 April 1978 – 'Channel Electron Multipliers: Properties, Development and Applications'.

RATINGS

Limiting values in accordance with the Absolute Maximum System (IEC134)

Operating voltage	max.	2.0	kV
Temperature* (operating and storage)	max.	70	^{o}C
Bake temperature	max.	300	^{o}C
Ambient pressure wuth high voltage applied	max.	13.3 (1.0×10^{-4} torr)	mN.m^{-2}
Plate clamping rings diameter	max.	68.5	mm

---

*The plate should be stored in a dry or vacuum environment.

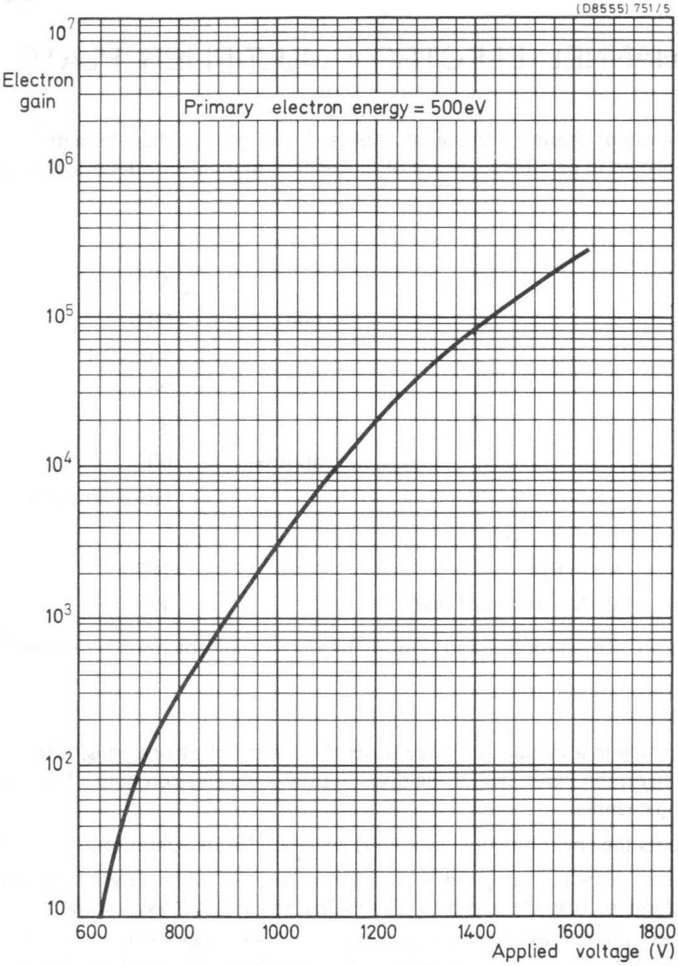

Fig.1 Typical current gain as a function of applied voltage

MOUNTING

As channel plate is fragile and great care must be taken to ensure that it is not unduly stressed when mounted in the vacuum system. It is recommended that the plate is mounted between clean polished brass or stainless steel rings, giving noise-free electrical contacts. The device will withstand a contact pressure of at least 10^4 N.m^{-2} (corresponding to a load of ~ 1 g per mm^2) applied via screws pushing against small helical springs. Polished brass annular shims, about 1.5 m wide and 50 μm thick, are recommended for insertion between plates operating in cascade.*

OVERLOAD PROTECTION

Due to the glass characteristics, it is essential that power supplies should not be capable of delivering a current in excess of 1 mA. This can be achieved by the use of a series current limiting resistor, the value of which may be calculated as follows:

$$R_p = \text{operating voltage (max.)} \times 10^3\ \Omega.$$

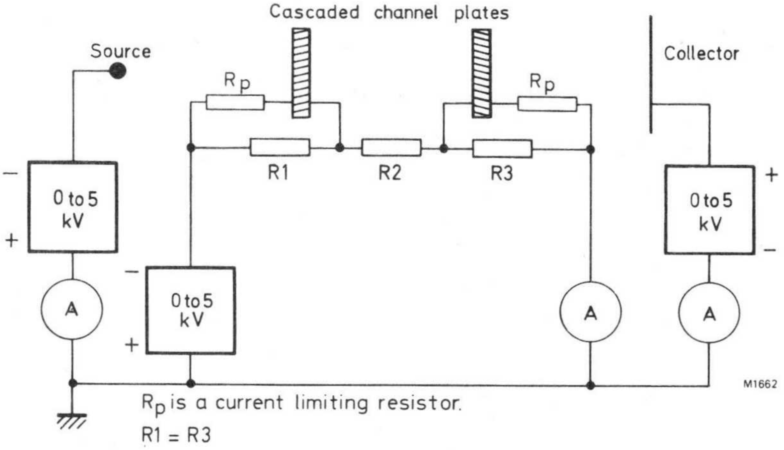

Fig.2 Circuit for cascaded channel plates

---

* Brass shims must not be used during the baking process otherwise Zinc contamination will occur.

ASSOCIATED ACCESSORIES

SURVEY OF TYPES

SOCKET

DESCRIPTION

This socket consists of a plastic moulding with 12 gold-plated contacts. The connections to the socket can be made by means of wire soldering. Mounting is done with two M3 screws.

ELECTRICAL DATA

Maximum working voltage between two adjacent contacts		2000	V
Insulation resistance between two adjacent contacts (at 500 V)	>	10^{13}	Ω
Contact resistance	<	10	mΩ
Capacitance			
between two adjacent contacts		0,8	pF
one contact to all		1,3	pF
Temperature range		–55 to + 100	°C

MECHANICAL DATA

Dimensions in mm

Outlines

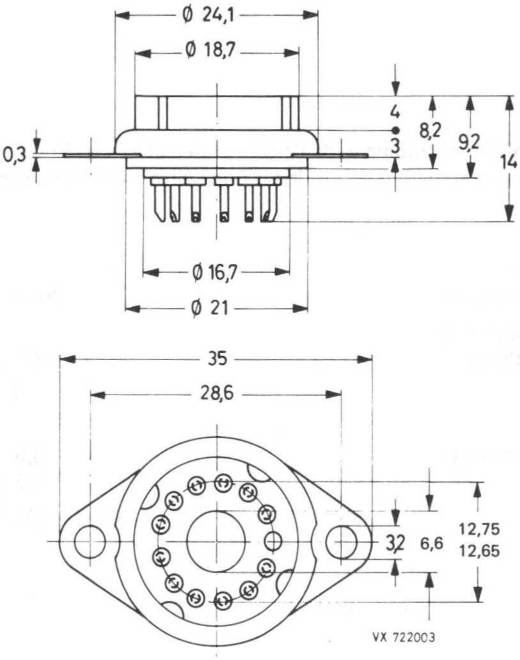

Mass	7 g
Mounting hole diameter	22,5 mm

The use of flexible connecting wires is strongly recommended.

DUODECAL SOCKET

DESCRIPTION

This socket consists of an epoxy moulding with 12 tin-plated phosphor-bronze contacts, spigot keyway in the centre hole and separate cadmium-plated saddle. The socket pins are suitable for either wire soldering, or soldering into a printed-wiring board. The socket can be mounted with or without the separate mounting ring by means of two M3 screws.

ELECTRICAL DATA

Maximum working voltage between two adjacent contacts	2000 V
Maximum working voltage between any contact and saddle	3000 V
Insulation resistance between two adjacent contacts (at 500 V)	$> 10^{13}\ \Omega$
Contact resistance	< 50 mΩ
Temperature	max. 80 °C

MECHANICAL DATA Dimensions in mm

Outlines

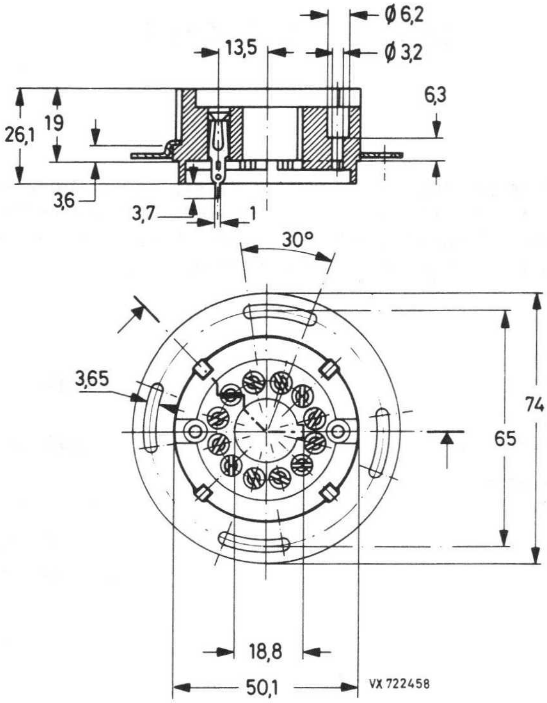

Mass

socket	50 g
mounting ring	15 g

DIHEPTAL SOCKET

DESCRIPTION

This socket consists of an epoxy moulding with 14 tin-plated phosphor-bronze contacts, spigot keyway in the centre hole and separate cadmium-plated saddle. The socket pins are suitable for either wire soldering, or soldering into a printed-wiring board. The socket can be mounted with or without the separate mounting ring by means of two M3 screws.

ELECTRICAL DATA

Maximum working voltage between two adjacent contacts		2000 V
Maximum working voltage between any contact and saddle		3000 V
Insulation resistance between two adjacent contacts (at 500 V)		$> 10^{13}$ Ω
Contact resistance		$<$ 50 mΩ
Temperature	max.	80 °C

MECHANICAL DATA

Dimensions in mm

Outlines

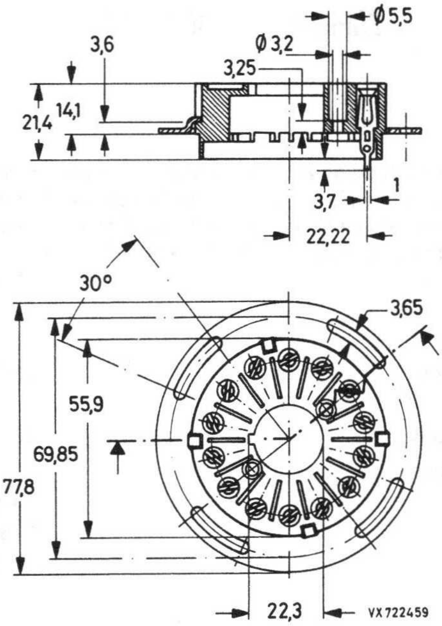

Mass

socket	45 g
mounting ring	15 g

BIDECAL SOCKET

DESCRIPTION

This socket consists of an epoxy moulding with 20 tin-plated phosphor-bronze contacts, spigot keyway in the centre hole and separate cadmium-plated saddle. The socket pins are suitable for either wire soldering, or soldering into a printed-wiring board. The socket can be mounted with or without the separate mounting ring by means of three M4 or three M3 screws respectively.

ELECTRICAL DATA

Maximum working voltage between two adjacent contacts	2000 V
Maximum working voltage between any contact and saddle	4000 V
Insulation resistance between two adjacent contacts (at 500 V)	$> 10^{13}$ Ω
Contact resistance	$<$ 50 mΩ
Temperature	max. 80 °C

MECHANICAL DATA

Outlines

Dimensions in mm

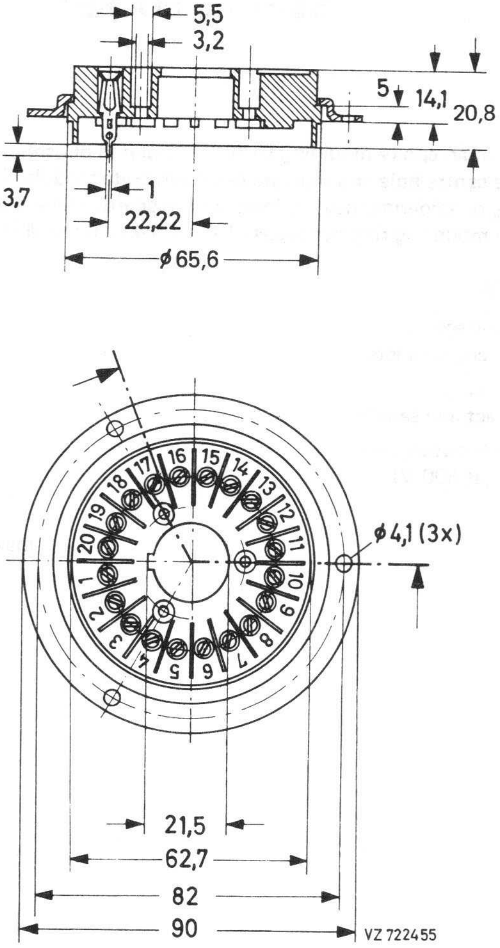

Mass

socket	64 g
mounting ring	44 g

SOCKET

DESCRIPTION

This socket has a plastic moulding with 12 tin-plated printed-wiring contacts.

ELECTRICAL DATA

Maximum working voltage between two adjacent contacts		2000 V
Insulation resistance between two adjacent contacts (at 500 V)	>	10^{13} Ω
Contact resistance	<	10 mΩ
Temperature	max.	80 °C

MECHANICAL DATA Dimensions in mm

Outlines

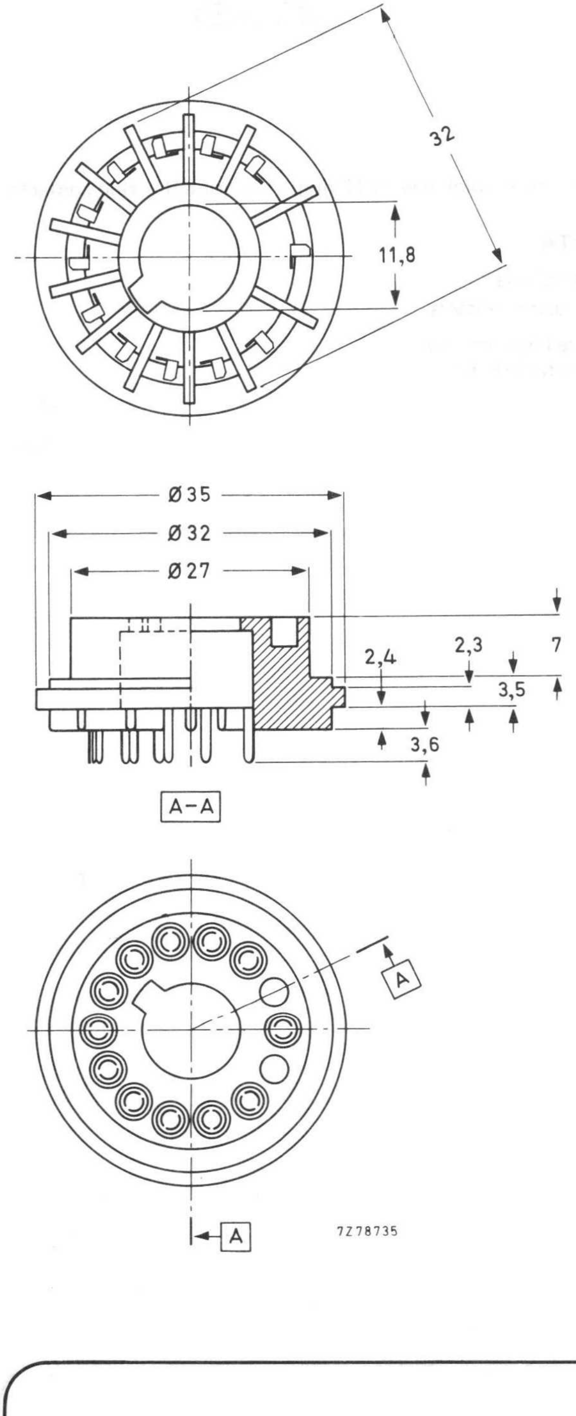

Mass 7 g

SOCKET

DESCRIPTION

This socket consists of a plastic moulding with 14 gold-plated contacts. The connections to the socket can be made by means of wire soldering. Mounting is done with two M3 screws.

ELECTRICAL DATA

Maximum working voltage between two adjacent contacts		2000	V
Insulation resistance between two adjacent contacts (at 500 V)	>	10^{13}	Ω
Contact resistance	<	10	mΩ
Temperature	max.	80	°C

MECHANICAL DATA

Dimensions in mm

Outlines

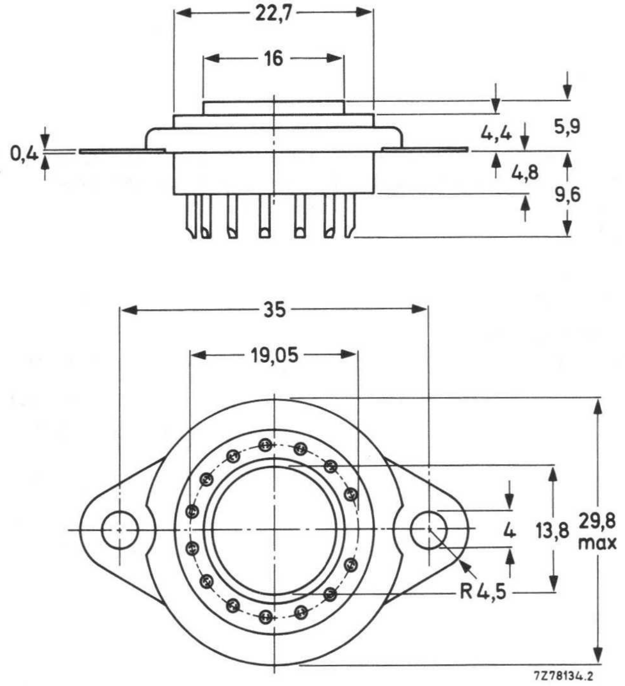

SOCKET

DESCRIPTION

This socket consists of a polytetrafluoraethylene moulding with 19 tin-plated phosphor-bronze contacts and a separate cadmium-plated saddle. The socket pins are suitable for either wire soldering, or soldering into a printed-wiring board. The socket can be mounted with the separate mounting ring by means of two M3 screws.

ELECTRICAL DATA

Maximum working voltage between two adjacent contacts		2000 V
Maximum working voltage between any contact and saddle		3000 V
Insulation resistance between two adjacent contacts (at 500 V)		$> 10^{13}$ Ω
Contact resistance		$<$ 50 mΩ
Temperature	max.	80 °C

MECHANICAL DATA

Dimensions in mm

Outlines

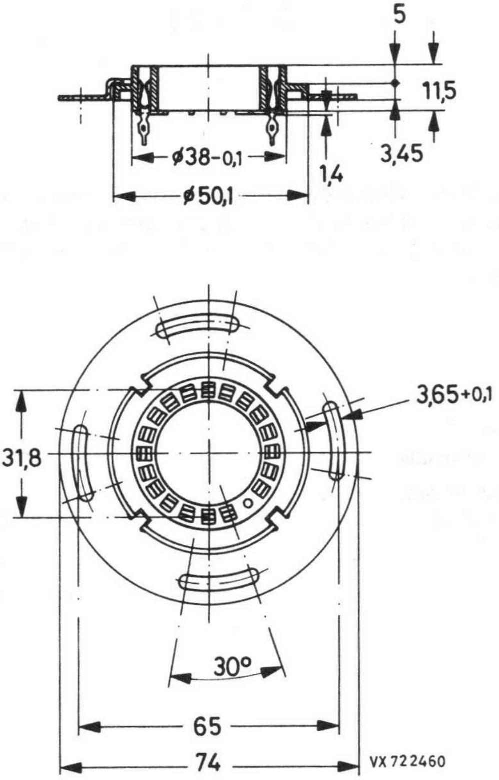

Mass

socket	18 g
mounting ring	15 g

SOCKET

DESCRIPTION

This socket consists of a polytetrafluoraethylene moulding with 21 tin-plated phosphor-bronze contacts and a separate cadmium-plated saddle. The socket pins are suitable for either wire soldering, or soldering into a printed-wiring board. The socket can be mounted with the separate mounting ring by means of two M3 screws.

ELECTRICAL DATA

Maximum working voltage between two adjacent contacts		2000	V
Maximum working voltage between any contact and saddle		3000	V
Insulation resistance between two adjacent contacts (at 500 V)	>	10^{13}	Ω
Contact resistance	<	50	mΩ
Temperature	max.	80	°C

MECHANICAL DATA

Dimensions in mm

Outlines

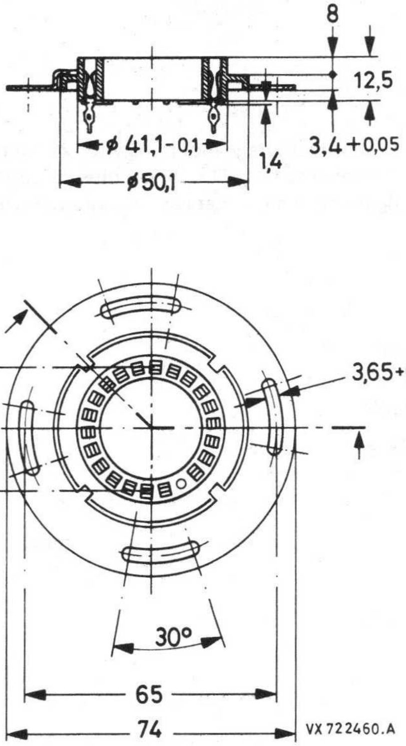

Mass

socket	35 g
mounting ring	15 g

PHOTOMULTIPLIER BASE ASSEMBLY

This base assembly is for tubes used to detect very brief low-intensity light pulses in physics experiments using coincidence measurements, Cerenkov light, high-speed scintillators, or the counting of single photoelectrons.

QUICK REFERENCE DATA

H.T. supply	see data sheet of relevant photomultiplier tube
Maximum current consumption	0,6 mA/kV
Outputs	anode output, 50 Ω, BNC dynode output, 50 Ω, BNC

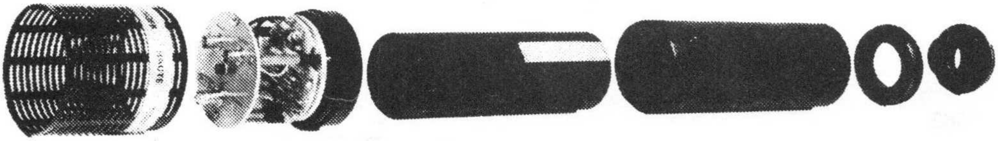

The base assembly S5632 consists of two parts that screw together:

S5632/AV	shielding part for fast photomultiplier tubes with a useful diameter of 44 mm;
S563	voltage divider part for fast photomultiplier tubes with a useful diameter of 44 mm or 110 mm, and a 20-pin plastic base.

The parts can also be used separately; see table below.

photomultiplier tube		shielding + voltage divider	shielding	voltage divider
useful diameter of photocathode	type			
44 mm	XP2020(Q) XP2230B XP2252B XP2262B XP2233B XP2254B 56AVP family	S5632	S5632/AV	S563
110 mm	XP2040(Q) XP2041(Q)	information on request		S563

MECHANICAL DATA

Outlines

S5632/AV

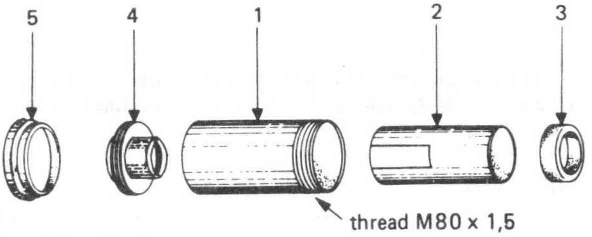

1 = Soft iron shield
2 = Mumetal shield
3 = Foam plastic ring
4 = Fastening ring for light guide
5 = Lock ring

S563

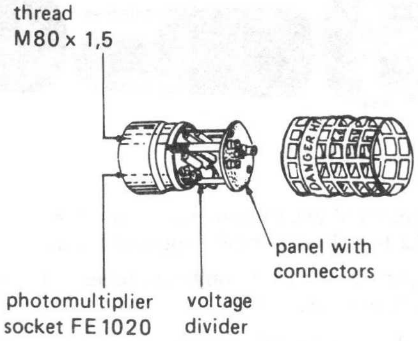

Fig. 1 S5632 = S5632/AV + S563.

assembly	overall length mm	overall diameter mm	mass g
S5632	334	90	4490
S5632/AV	240	80	4000
S563	108	90	490

ELECTRICAL DATA

Maximum supply voltage	−3 kV
Maximum current consumption	0,6 mA/kV

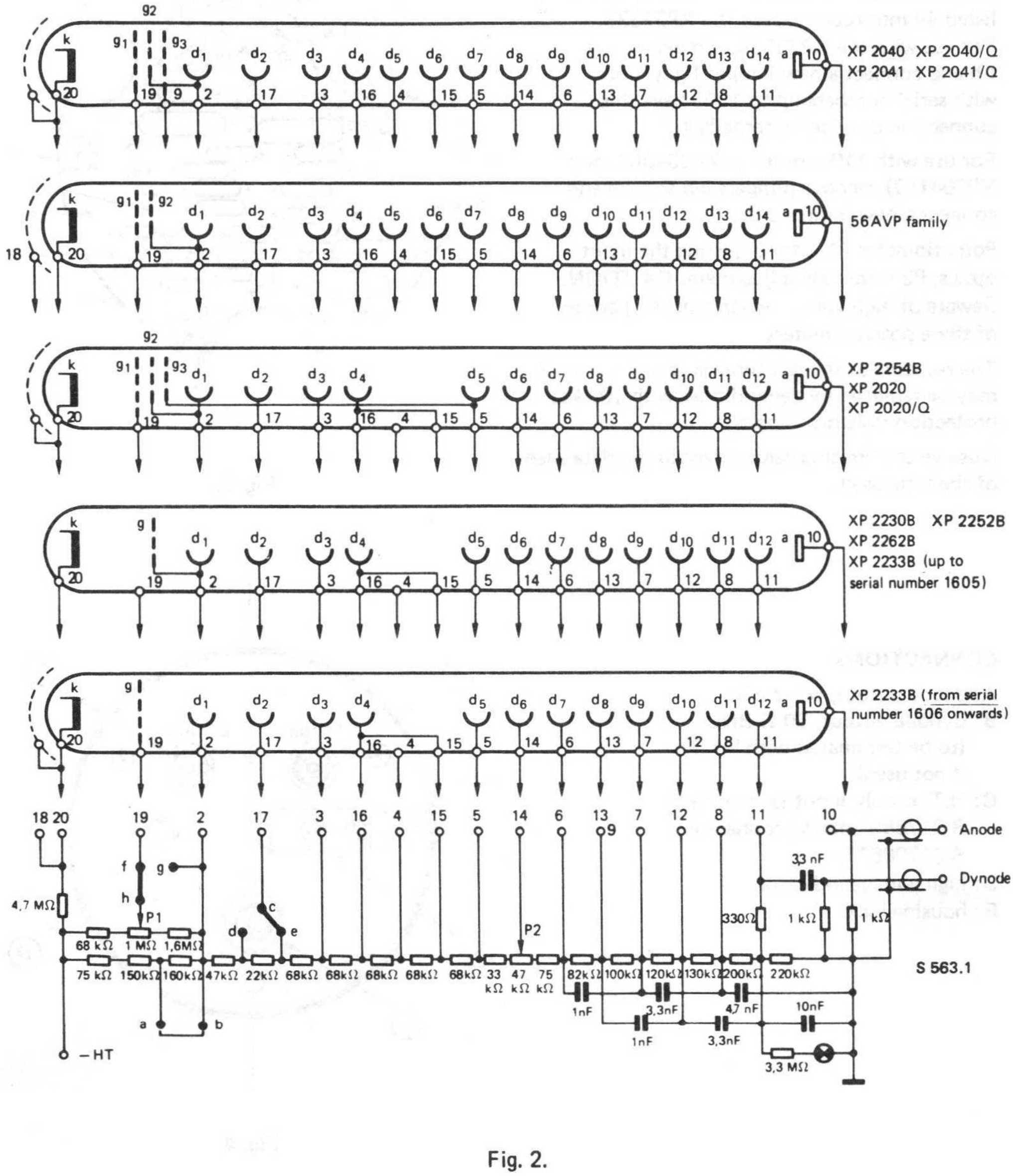

Fig. 2.

The voltage divider is wired for 12-stage and 14-stage tubes (see Fig. 2); in 12-stage tubes two of the resistors are short-circuited by the internal connection of dynode d_4 to pins 15 and 16.

The divider can be used as-is with any of the listed 44 mm tubes except the XP2233B. For use with the XP2233B, remove jumper f-h and connect a new jumper f-g. (Tubes with serial numbers up to 1605 have this connection provided internally.)

For use with 110 mm tubes XP2040(Q) and XP2041(Q), remove jumpers a-b and c-e and connect a new jumper c-d.

Potentiometer P1 is for adjusting the input optics; P2 is for gain adjustment. CAUTION: Beware of high voltage when adjusting either of these potentiometers.

The resistors of the last three stages (* in Fig. 3) may be replaced by zener diodes with 100 kΩ protection resistors in parallel.

Observe the limiting values given in the data sheet of the tube used.

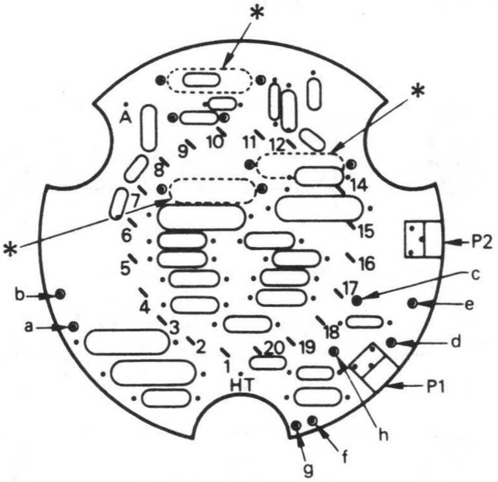

Fig. 3.

CONNECTIONS

A: anode output, 50 Ω BNC
B: dynode output, 50 Ω BNC
(to be terminated with 50 Ω
if not used)
C: H.T. supply input (socket SHV
R 317580; mating connector
R 317005**)
D: high-voltage indicator
E: housing lock

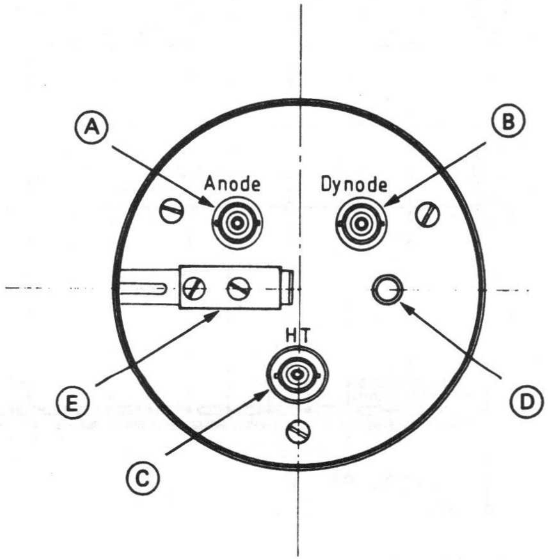

Fig. 4.

** Not supplied by the manufacturer of the base assembly.

ELECTRICAL PERFORMANCE

Pulse response

Figure 5 shows the anode pulse due to a very brief light pulse at the cathode. The peak amplitude into a 50 Ω load is 200 mA; 10% – 90% rise time, t_r, and full width at half maximum, t_W, are tabulated below.

Gain

The voltage divider is of the semi-progressive type, similar to type B' for tubes XP2020(Q), XP2040(Q), XP2041(Q), XP2230B, XP2254B, and 56AVP family, type B for tubes XP2252B, XP2233B and XP2262B. It combines very fast response with a good compromise between gain and pulse linearity. Supply voltages for a gain of 10^7 are tabulated below.

Pulse response

tube	supply voltage V	t_r ns	t_W ns
XP2020(Q)	2800	1,6	2,5
XP2040(Q)	2200	2,4	3,3
XP2041(Q)	2200	2,4	3,3
XP2230B	2700	1,8	2,6
XP2252B	2100	2,1	3,1
XP2233B	2100	2,1	3,1
XP2262B	2100	2,1	3,1
XP2254B	2800	1,6	2,5
56DVP	2400	2,1	3,5

Gain

tube	supply voltage for $G = 10^7$ (V)
XP2020(Q)	2230
XP2040(Q)	2150
XP2041(Q)	2350
XP2230B	2330
XP2252B	2050
XP2233B	2200
XP2262B	1950
XP2254B	2350
56DVP	2060

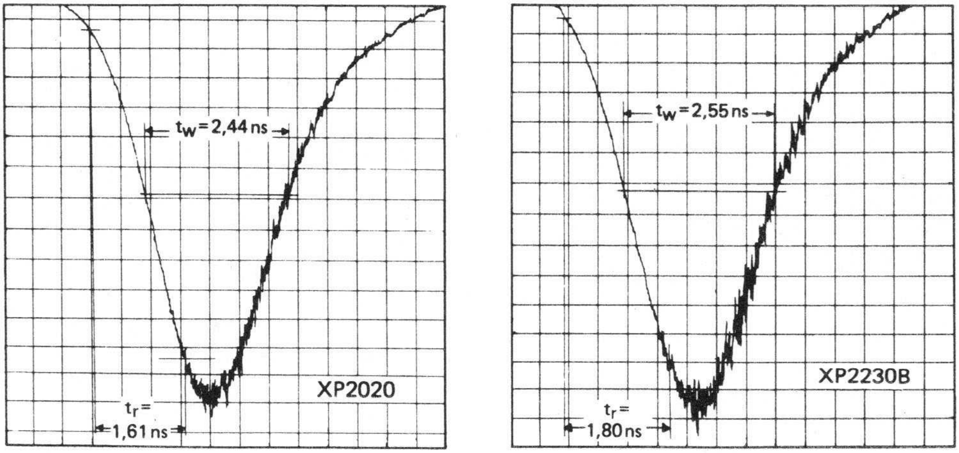

Fig. 5.

NOTES

NOTES

NOTES

NOTES

The Mullard technical handbook system...
... a comprehensive data library

The Mullard technical handbook is made up of four sets of Books, each comprising several parts:-

Book 1 (light blue)	Semiconductor devices
Book 2 (orange)	Electronic tubes
Book 3 (green)	Components, materials and assemblies
Book 4 (dark blue)	Integrated circuits

Most of the devices for which full data is given in these books are those around which we would recommend equipment to be designed. Where appropriate, other types no longer recommended for new equipment designs but generally available for equipment production, are listed separately. Data sheets for these types may be obtained on request. Older devices for which data may be obtained on request are also included in the index of the appropriate part of each book.

Because the Technical handbook system forms a comprehensive data reference library the current Mullard Quick Reference Guide should always be consulted for details of the Mullard preferred range.

The data contained in these books is as accurate and up to date as possible at the time of going to press. It must be understood, however, that no guarantee can be given on the availability of the various devices, or that their specifications may not be changed before the next edition is published.

Each part is reviewed regularly, and revised and re-issued where necessary. Revisions to previous data are indicated by an arrow in the margin.

Requests for copies of the Quick Reference Guide and individual data sheets (please quote the type number) should be sent to:-

Technical Publications Department, Mullard Limited,
New Road, Mitcham, Surrey CR4 4XY. Telex 22194.

Prices and availability information for Mullard components should be obtained from Mullard House, or from one of the Mullard Distributors listed on the back cover.

The Mullard Data Base

For the equipment designer, technical information on electronic components is vital. Mullard market the widest range of components in the U.K., supported by a comprehensive information service – the Mullard Data Base.

Brief details are given here. For further information and an order form, please write to:-

The Technical
Publication Department,
Mullard Limited,
New Road, Mitcham,
Surrey CR4 4XY.

Regular Publications

Mullard Bulletin

A must for designers, this bi-monthly, newspaper-style publication briefly describes new components and offers further information on subjects of interest.

Consumer Electronics

A review, in newspaper style, published every four months. Articles and features of interest to those in the consumer electronics industry, with emphasis on television technology and allied subjects.

Technical Publications, Brochures, Leaflets and Catalogues

Mullard publish hundreds of publications on components and their application.

Make sure your name is on the mailing list for the Mullard Bulletin, which describes and offers new publications.

P
PRE
PREST
PRESTEL
ESTEL
TEL
L

Prestel too!

Prestel Too!

All Mullard publications can be ordered directly via Prestel.

The Mullard Data Base begins, on page 556201.

Electronic Components and Applications

A quarterly technical journal covering, in depth, developments in electronics based on the work of Philips, Signetics and Mullard laboratories. Please ask for a sample copy and subscription form.

Quick Reference Guide

All products marketed by Mullard are listed alphanumerically and described briefly in our Quick Reference Guide.

Technical Data Service

This service provides detailed, up-to-date information on the characteristics and performance of Mullard components.

Subscribers to any or all of the four handbook sections receive all relevant handbooks, looseleaf binders, monthly mailings of new data sheets, and new handbook parts as they are published.

For those not wishing to subscribe to the Data Service, handbook parts can be purchased individually.

Individual data sheets are available free-of-charge, and can be obtained by quoting the type number.

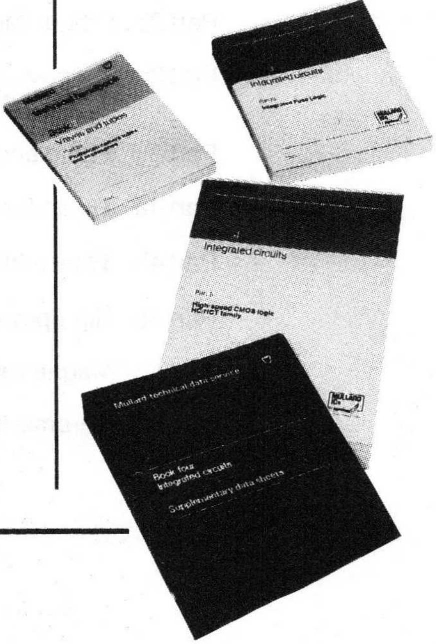

Mullard Data Base: Prestel 556201

Mullard technical handbook

Book 2 Electronic tubes

Book 2 consists of the following parts:

Part 1a	Colour tv, data and graphic display tubes and deflection units
Part 1b	Cathode-ray tubes
Part 1c	Monochrome tubes and deflection units
Part 1d	Wirewound components for tv and monitors
Part 2a	Plumbicon camera tubes and accessories
Part 2b	Geiger-Muller tubes
Part 2c	Vidicon and Newvicon camera tubes and deflection units
Part 3	Photo and electron multipliers
Part 4a	Tubes for r.f. heating
Part 4b	Transmitting tubes for communications
Part 4c	High-power klystrons
Part 4d	Magnetrons for microwave heating
Part 4e	Ceramic tubes for communications

Mullard

technical handbook

Book 2

MULLARD DISTRIBUTOR SERVICE

Alrad Instruments Ltd.
Turnpike Road, Industrial Estate, Newbury, Berks. RG13 2NS.
Tel: Newbury (0635) 30345. Easy Link: 946240. quote: 19005205

Mullard **Mullard Limited,** Mullard House, Torrington Place,
London WC1E 7HD. Telephone: (01) 580 6633. Telex: 264341.
Mullard manufacture and market electronic components under their own name and those of associated companies.

Printed in The Netherlands (1M/387)
9398 150 40051
Publication No. 807111