Engineering data service

SYLVANIA
ELECTRONIC TUBES

VOLUME 3

SYLVANIA **EDS** SUBSCRIPTION

Nº 4531

SUBSCRIPTION RECORDS MAINTAINED
BY

CADD
SYLVANIA ELECTRIC PRODUCTS INC.
1100 Main Street
Buffalo 9, New York

MECHANICAL DATA

Bulb	ST-12
Base	Small 4-Pin, Phenolic
Outline	12-6
Top Cap	C1-1
Basing	4K

ELECTRICAL DATA

FILAMENT CHARACTERISTICS

Filament Voltage DC	0.90 Volts
Filament Current	35 Ma

TYPICAL OPERATION

DC Voltage Amplifier[1]

Plate Supply Voltage (DC)	45 Volts
Grid No. 2 Voltage (DC)	16.5 Volts
Grid No. 1 Voltage	−1.6 Volts
Plate Load Resistor	100 Megohms
Plate Current (DC)	0.33 μa
Grid No. 2 Current (DC)	0.3 μa
DC Voltage Gain[2]	125

CHARACTERISTICS

Grid No. 1 Current[3]	±1.0 μμa	Max.
Linearity[4]	10 Percent	Max.

NOTES:

1. *Tube shielded from all light and external electrical influences.*
2. *The ratio ΔEb/ΔEc2 is calculated from the change in Grid No. 1 voltage required to give 2.0 volts increase in Eb.*
3. *Ef = .8 to 1.0 volts, Ebb = 45 volts, Eb = 12 volts, Ec1 Adj., Ec2 = 16.5 volts, Ib = .33μa, Rg1 = 10,000 megohms.*
4. *The departure of the Ec1 vs Eb curve from a straight line between the point Eb = 12 Volts, and Eb = 14 Volts, measured on the Eb axis and expressed as a percentage of 2 volts under Typical Operating Conditions.*

QUICK REFERENCE DATA

The Sylvania Type 1229 is a filamentary tetrode electrometer tube contained in a ST-12 envelope. The 1229 features exceptionally low grid current characteristics, electrostatic shielding and light shielding.

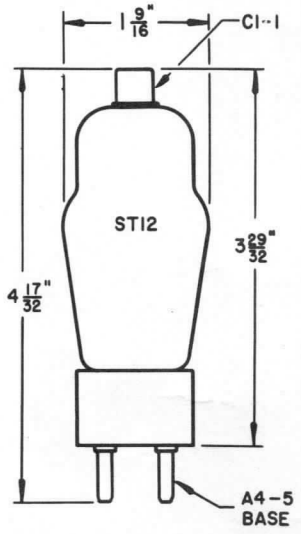

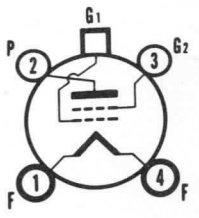

4K

SYLVANIA ELECTRIC PRODUCTS INC.

Electronic Components Group
ELECTRONIC TUBE DIVISION
EMPORIUM, PA.

A Technical Publication
JULY, 1965

File Under
RECEIVING TUBES

MECHANICAL DATA

Bulb	T-6½
Base	E9-1, Small Button, 9 Pin
Basing	9CZ
Cathode	Coated Unipotential
Mounting Position	
Preferred	Upright or with Plate Majors in Vertical Position
Permissible	Any

ELECTRICAL DATA

HEATER CHARACTERISTICS

Heater Voltage, ±5% (Series/Parallel)	12.6/6.3 Volts
Heater Current (Series/Parallel)	300/600 Ma
Heater Power (Series/Parallel)	3.8/3.8 Watts
Heater Cathode Voltage	
Heater Negative with Respect to Cathode:	
Total DC and Peak	200 Volts Max.
Heater Positive with Respect to Cathode:[1]	
DC	100 Volts Max.
Total DC and Peak	200 Volts Max.

DIRECT INTERELECTRODE CAPACITANCES (Each Section)

Grid to Plate	3.2 μμf
Input	3.6 μμf
Output	0.6 μμf
Grid to Grid	0.042 μμf Max.
Plate to Plate	1.0 μμf Max.
Heater to Cathode	4.6 μμf

RATINGS (Design Center Values — Except as Noted)

Plate Voltage	300 Volts	Max.
Peak Positive Plate Voltage[2] (Abs. Max.)	1000 Volts	
Negative Grid Voltage	75 Volts	Max.
Positive Grid Voltage	3.5 Volts	Max.
Peak Negative Grid Voltage	400 Volts	Max.
Peak Positive Grid Voltage[2]	13 Volts	Max.
Average Positive Grid Current	5 Ma	Max.
Peak Positive Grid Current[2]	100 Ma	Max.
Average Cathode Current	25 Ma	Max.
Peak Cathode Current[2]	300 Ma	Max.
Plate Dissipation		
Each Plate	3.5 Watts	Max.
Both Plates	7.0 Watts	Max.
Bulb Temperature	120°C	Max.
Grid Circuit Resistance		
Fixed Bias	0.1 Megohm	Max.
Cathode Bias	0.5 Megohm	Max.

QUICK REFERENCE DATA

The Sylvania Type 6350 is a miniature, T-6½, twin triode designed for use in high speed digital computers. Each section of the 6350 features a high zero bias plate current, sharp cutoff and a separate cathode connection.

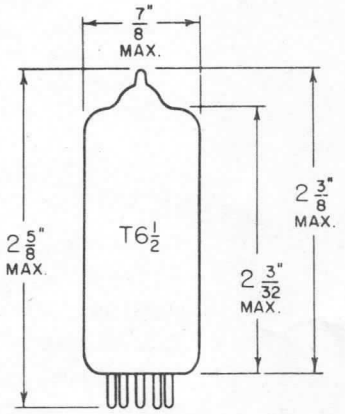

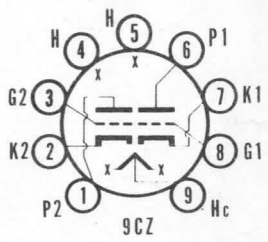

SYLVANIA ELECTRIC PRODUCTS INC.
RADIO TUBE DIVISION

Prepared and Released By The TECHNICAL PUBLICATIONS SECTION EMPORIUM, PENNSYLVANIA

JUNE 1954

CHARACTERISTICS (Each Section)[3]

Conditions:

Plate Voltage	150 Volts
Grid Voltage	-5.0 Volts
Plate Current	11 Ma
Transconductance	4600 μmhos
Amplification Factor	18
Plate Resistance	3900 Ohms
Grid Voltage for I_b—100 μa[4]	-11 Volts
Grid Voltage for I_b—1.0 ma[5]	-12 Volts

Interelectrode Resistance, Each Section[6]

Plate to All (Min.)	50 Megohms
Grid to All (Min.)	50 Megohms

Time Dependent Characteristics

Minimum Number of Heater Cycles	2000
Regulation of Heater Supply (Max.)	4%
Heater Voltage (AC)	7.0 Volts
Heater Cathode Voltage (AC)	140 Volts

NOTES:

1. *Heater positive is not recommended for reliable operation.*
2. *At 8% duty cycle, 1 megacycle repetition rate.*
3. *Section not under test shall be grounded.*
4. *With plate voltage of 150 volts.*
5. *With plate voltage of 200 volts.*
6. *With applied d c voltage of 300 volts and heater voltage of 6.3 volts. Cathode Positive so that no cathode emission occurs.*

AVERAGE PLATE CHARACTERISTICS

EACH SECTION

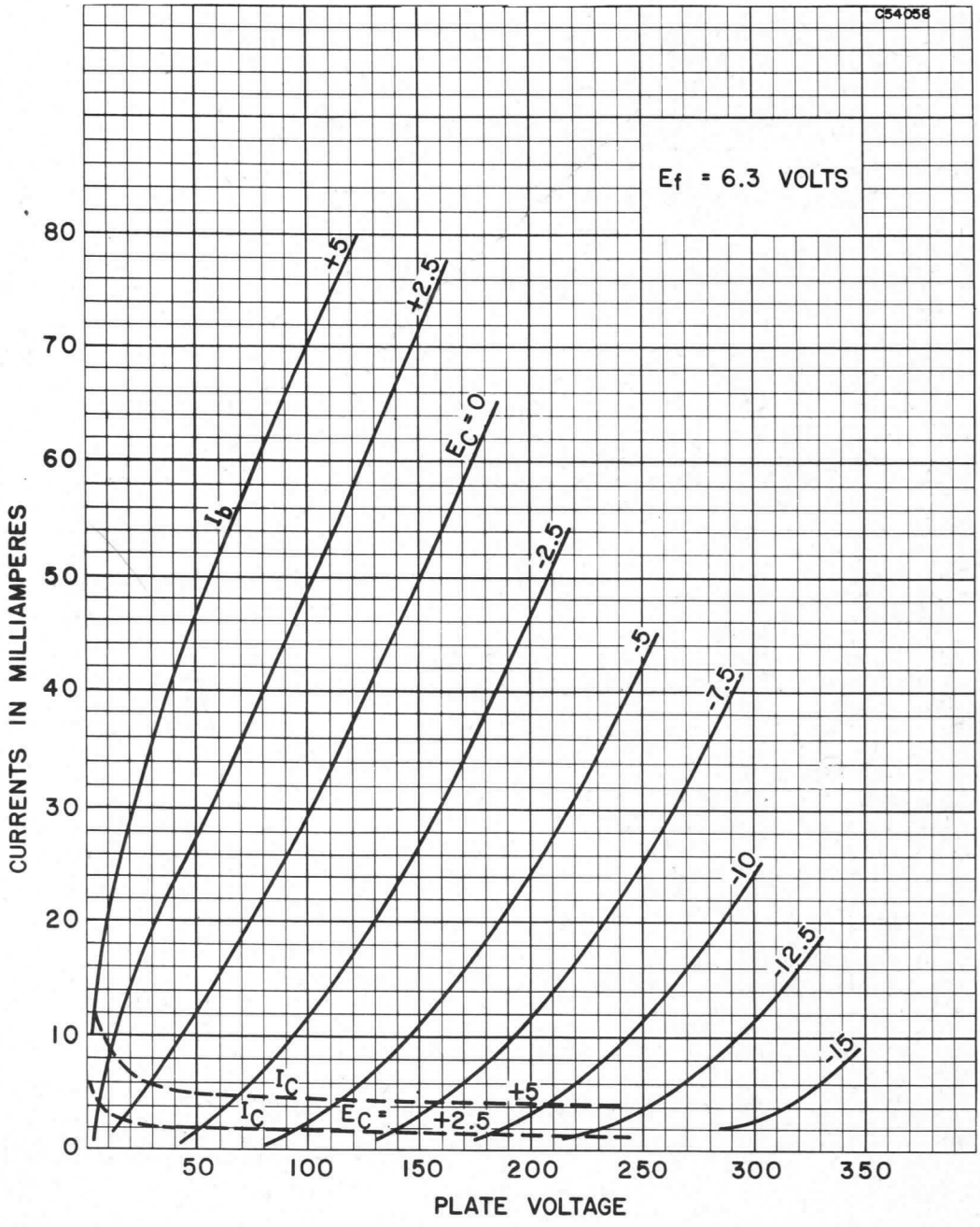

AVERAGE CHARACTERISTICS

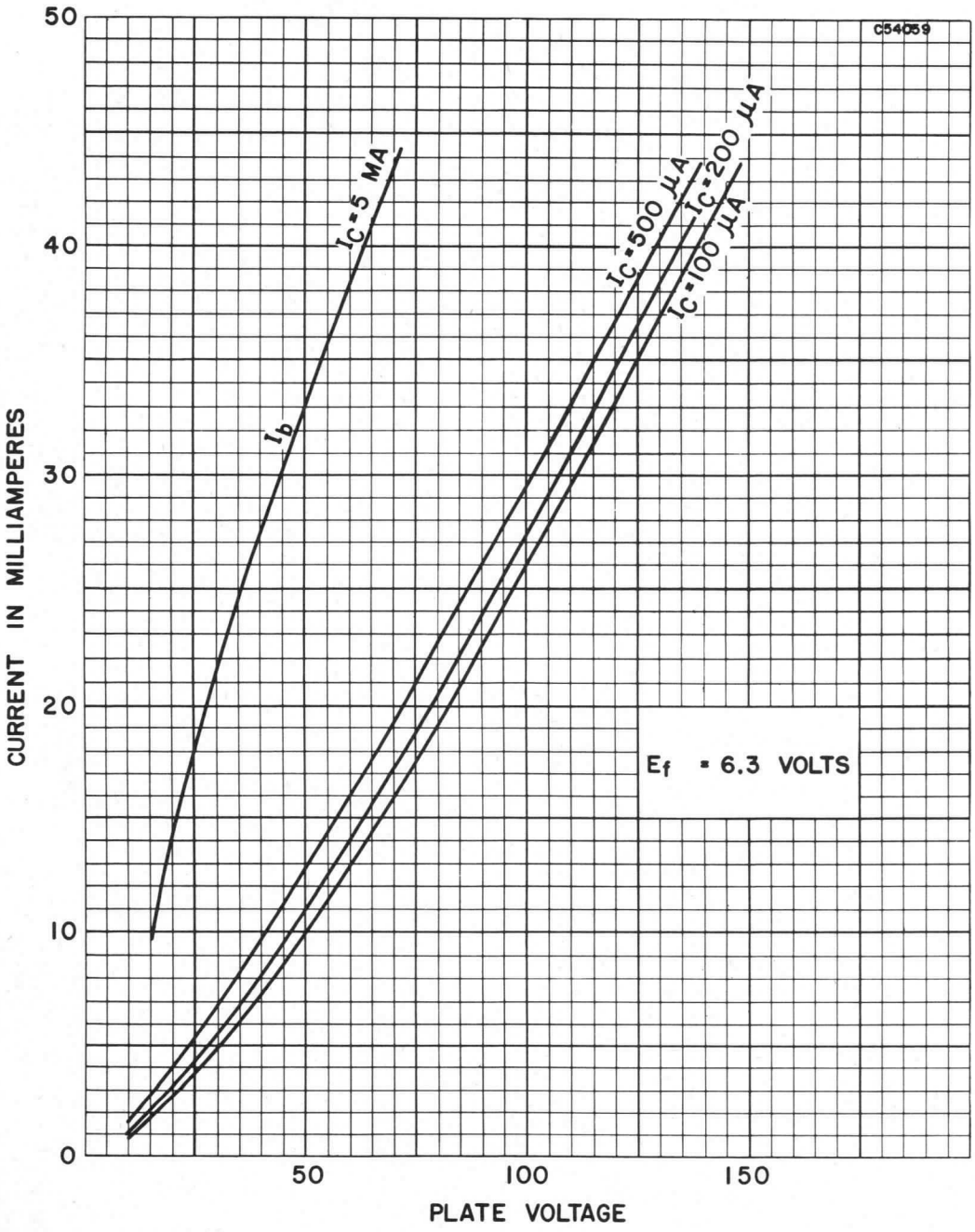

Type 6660/6BA6 is designed specifically for use in mobile communications equipment. The 6660/6BA6 may be operated without serious degradation under normal variations in supply voltage as encountered with automotive electrical systems. Also consistent with the requirements of the equipment, the tube is capable of withstanding appreciable on-off cycling.

MECHANICAL DATA

Bulb	T-5½
Base	E7-1, Miniature Button 7-Pin
Outline	5-2
Basing	7BK
Cathode	Coated Unipotential
Mounting Position	Any

ELECTRICAL DATA

HEATER CHARACTERISTICS

Heater Voltage[1]	6.3 Volts	
Heater Current	300 Ma	
Heater-Cathode Voltage (Design Center Values)		
Heater Negative with Respect to Cathode	100 Volts	Max.
Heater Positive with Respect to Cathode	100 Volts	Max.

DIRECT INTERELECTRODE CAPACITANCES

	Shielded	Unshielded	
Grid No. 1 to Plate	.0035	.0035 μμf	Max.
Input	5.5	5.5 μμf	
Output	5.5	5.0 μμf	

RATINGS (Design Center Values)

Plate Voltage	330 Volts	Max.
Grid No. 2 Supply Voltage	330 Volts	Max.
Grid No. 2 Voltage	See Rating Chart	
Plate Dissipation	3.3 Watts	Max.
Grid No. 2 Dissipation	0.65 Watts	Max.
Negative Grid No. 1 Voltage	55 Volts	Max.
Positive Grid No. 1 Voltage	0 Volts	Max.

CHARACTERISTICS AND TYPICAL OPERATION

Plate Voltage	100	250	Volts
Grid No. 3 Voltage	Connected to Cathode at Socket		
Grid No. 2 Voltage	100	100	Volts
Cathode Bias Resistor	68	68	Ohms
Plate Resistance (Approx.)	0.25	1.0	Megohm
Transconductance	4300	4400	μmhos
Plate Current	10.8	11.0	Ma
Grid No. 2 Current	4.4	4.2	Ma
Ec[1] for Gm = 40 μmhos (Approx.)	−20	−20	Volts

SPECIAL TESTS AND RATINGS

Heater-Cycling Rating

Cycles of Intermittent Operation (Minimum) . . . . 2000 Cycles

Ef = 7.5 volts cycled for one minute on and one minute off.
Eb + Ec3 + Ec2 + Ec1 = 0 volts.
Ehk = 135 volts with heater positive with respect to cathode.

Average Transconductance at Reduced Heater Voltage . . 3500 μmhos

Ef = 5.0 volts, Eb = 250 volts, Ec3 = 0 volts, Ec2 = 100 volts and Rk = 68 ohms (bypassed).

QUICK REFERENCE DATA

Sylvania Type 6660/6BA6 is designed specifically for mobile operation. It is a T-5½ semi-remote cutoff pentode intended for use as an R-F or I-F amplifier.

Type 6660/6BA6 possesses electrical characteristics essentially equivalent to Type 6BA6.

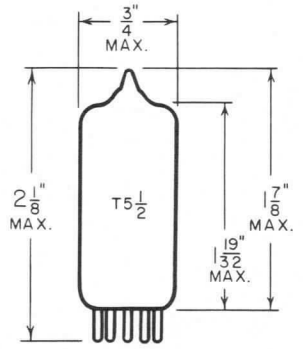

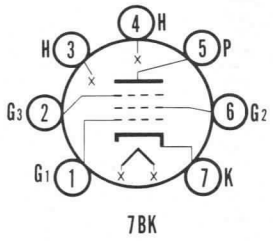

7BK

SYLVANIA
ELECTRONIC TUBES
A Division of
Sylvania Electric Products Inc.
RECEIVING TUBE
OPERATIONS
EMPORIUM, PA.

Prepared and Released By The
TECHNICAL PUBLICATIONS SECTION
EMPORIUM, PENNSYLVANIA

AUGUST, 1960

File Under
RECEIVING TUBES

NOTE:

1. *When operated from automotive electrical systems, the heater may be subjected to voltage variations as great as ± 20 percent. Although such extremes in heater voltage may be tolerated for short periods, increased equipment reliability can be achieved with improved supply voltage regulation.*

AVERAGE PLATE CHARACTERISTICS

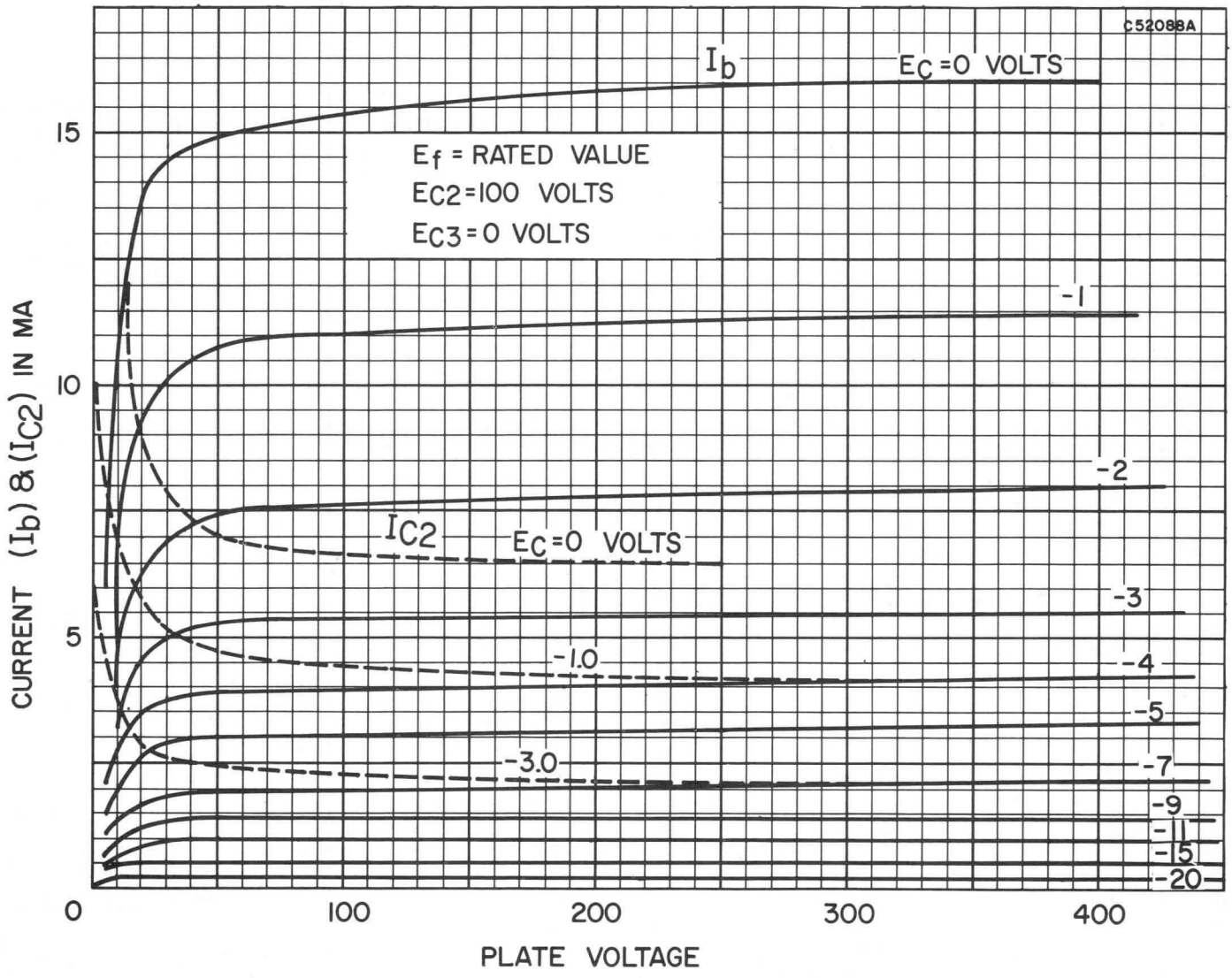

AVERAGE TRANSFER CHARACTERISTICS

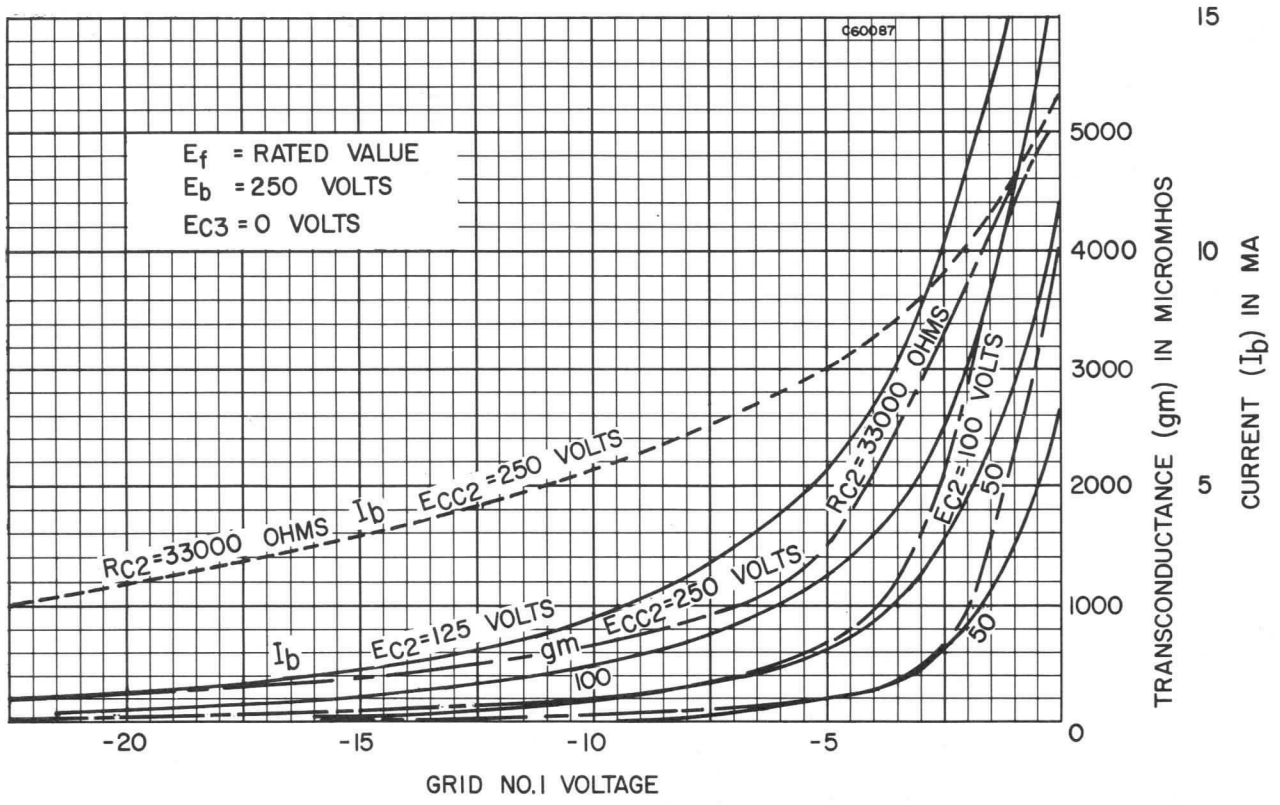

RATING CHART

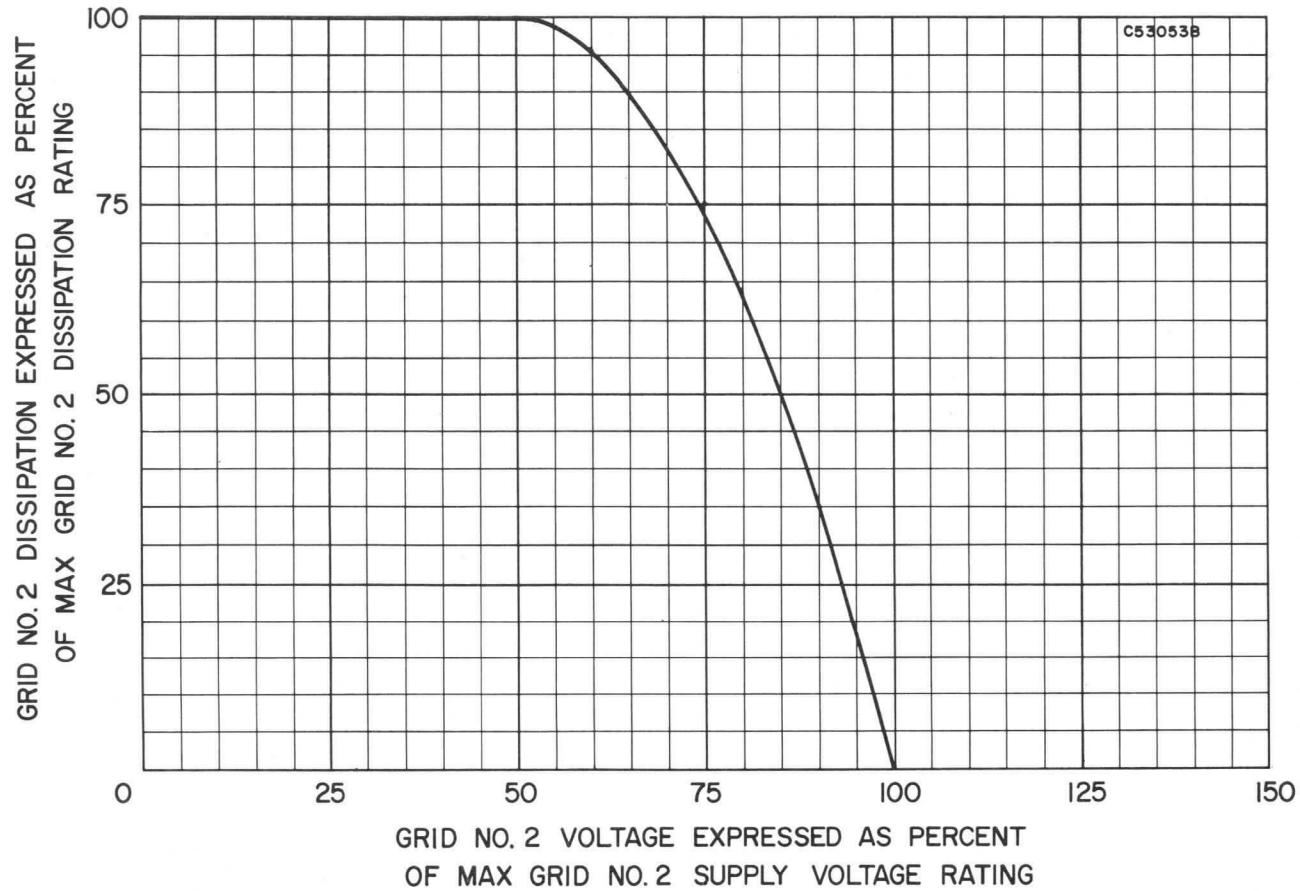

Type 6661/6BH6 is designed specifically for use in mobile communications equipment. The 6661/6BH6 may be operated without serious degradation under normal variations in supply voltage as encountered with automotive electrical systems. Also consistent with the requirements of the equipment the tube is capable of withstanding appreciable on-off cycling.

MECHANICAL DATA

Bulb	T-5½
Base	E7-1, Miniature Button 7-Pin
Outline	5-2
Basing	7CM
Cathode	Coated Unipotential
Mounting Position	Any

ELECTRICAL DATA

HEATER CHARACTERISTICS

Heater Voltage[1]	6.3 Volts	
Heater Current	150 Ma	
Heater-Cathode Voltage (Design Center Values)		
Heater Negative with Respect to Cathode	100 Volts	Max.
Heater Positive with Respect to Cathode	100 Volts	Max.

DIRECT INTERELECTRODE CAPACITANCES

	Shielded	Unshielded	
Grid to Plate	0.0035	0.0035 μμf	Max.
Input	5.4	5.4 μμf	
Output	4.4	4.4 μμf	

RATINGS (Design Center Values)

Plate Voltage	330 Volts	Max.
Grid No. 2 Supply Voltage	330 Volts	Max.
Grid No. 2 Voltage	See Rating Chart	
Plate Dissipation	3.3 Watts	Max.
Grid No. 2 Dissipation	0.55 Watt	Max.
Negative Grid No. 1 Voltage	55 Volts	Max.
Positive Grid No. 1 Voltage	0 Volts	Max.

CHARACTERISTICS AND TYPICAL OPERATION

Class A1 Amplifier			
Plate Voltage	100	250	Volts
Grid No. 3 Voltage	Connected to Cathode at Socket		
Grid No. 2 Voltage	100	150	Volts
Cathode Bias Resistor	200	100	Ohms
Plate Current	3.6	7.4	Ma
Grid No. 2 Current	1.4	2.6	Ma
Transconductance	3400	4600	μmhos
Plate Resistance (Approx.)	0.7	1.4	Megohm
Ec1 for Ib = 10 μa (Approx.)	−5.0	−7.7	Volts

SPECIAL TESTS AND RATINGS

Heater-Cycling Ratings

Cycles of Intermittent Operation (Minimum) . . . . 2000 Cycles
Ef = 7.5 volts cycled for one minute on and one minute off.
Eb + Ec2 + Ec3 + Ec1 = 0 Volts.
Ehk = 135 volts with heater positive with respect to cathode.

Average Transconductance at Reduced Heater Voltage . . 3600 μmhos
Ef = 5.0 volts, Eb = 250 volts, Ec3 = 0 volts, Ec2 = 150 volts and Rk = 100 ohms (bypassed)

QUICK REFERENCE DATA

Sylvania Type 6661/6BH6 is designed specifically for mobile operation. It is a T-5½ sharp cut-off pentode intended for use as a R-F or I-F amplifier.

Type 6661/6BH6 possesses electrical characteristics essentially equivalent to Type 6BH6.

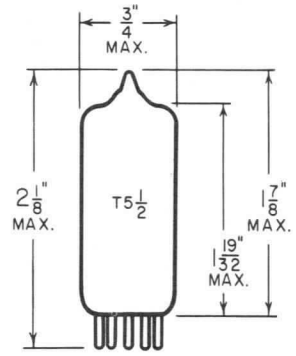

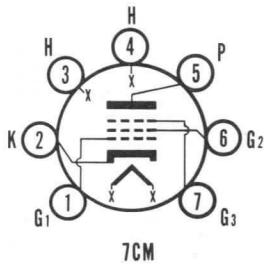

7CM

SYLVANIA
ELECTRONIC TUBES
A Division of
Sylvania Electric Products Inc.
RECEIVING TUBE
OPERATIONS
EMPORIUM, PA.

Prepared and Released By The
TECHNICAL PUBLICATIONS SECTION
EMPORIUM, PENNSYLVANIA

AUGUST, 1960

File Under
RECEIVING TUBES

NOTE:

1. *When operated from automotive electrical systems, the heater may be subjected to voltage variations as great as ± 20 percent. Although such extremes in heater voltage may be tolerated for short periods, increased equipment reliability can be achieved with improved supply-voltage regulation.*

AVERAGE PLATE CHARACTERISTICS

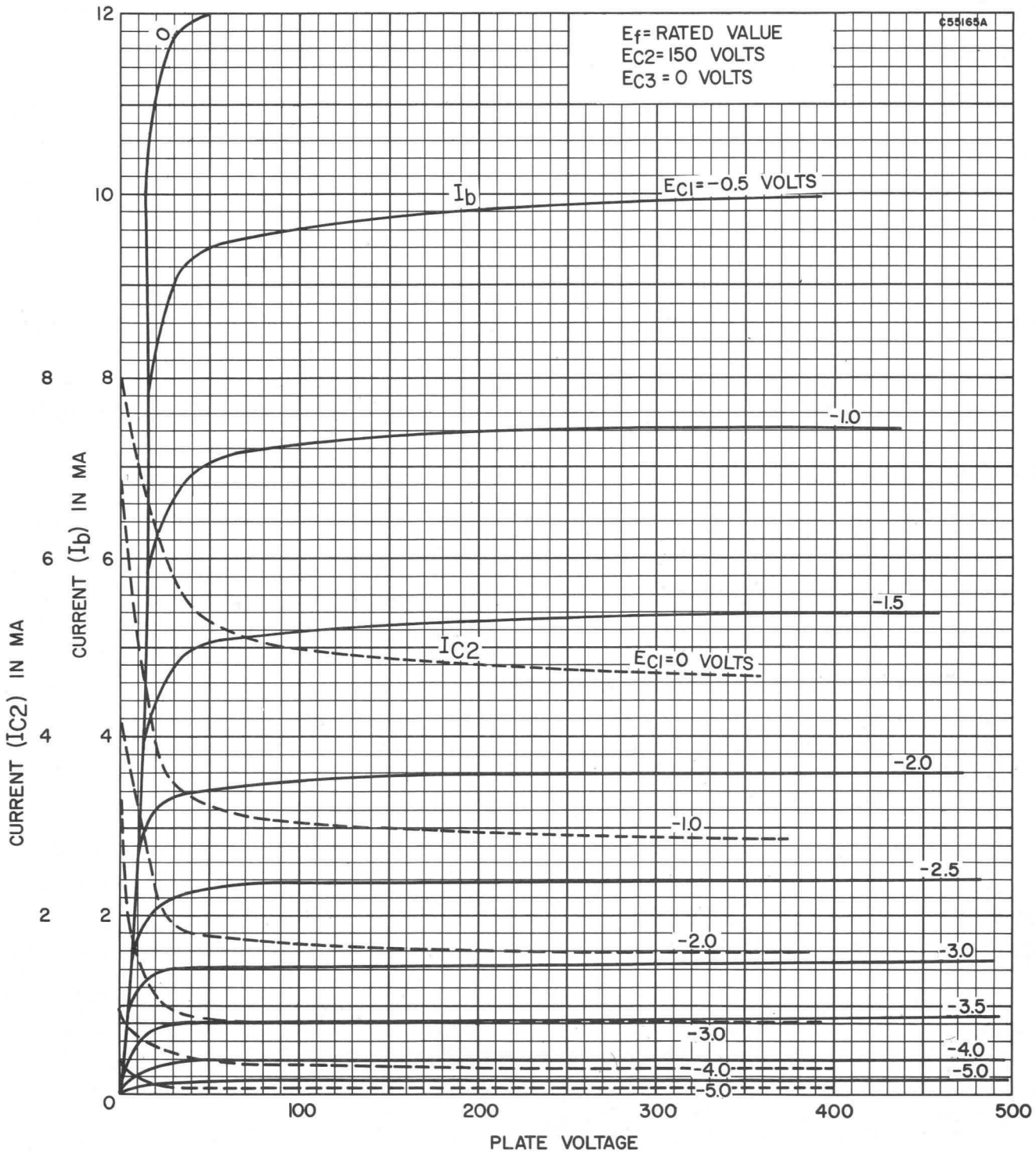

AVERAGE TRANSFER CHARACTERISTICS

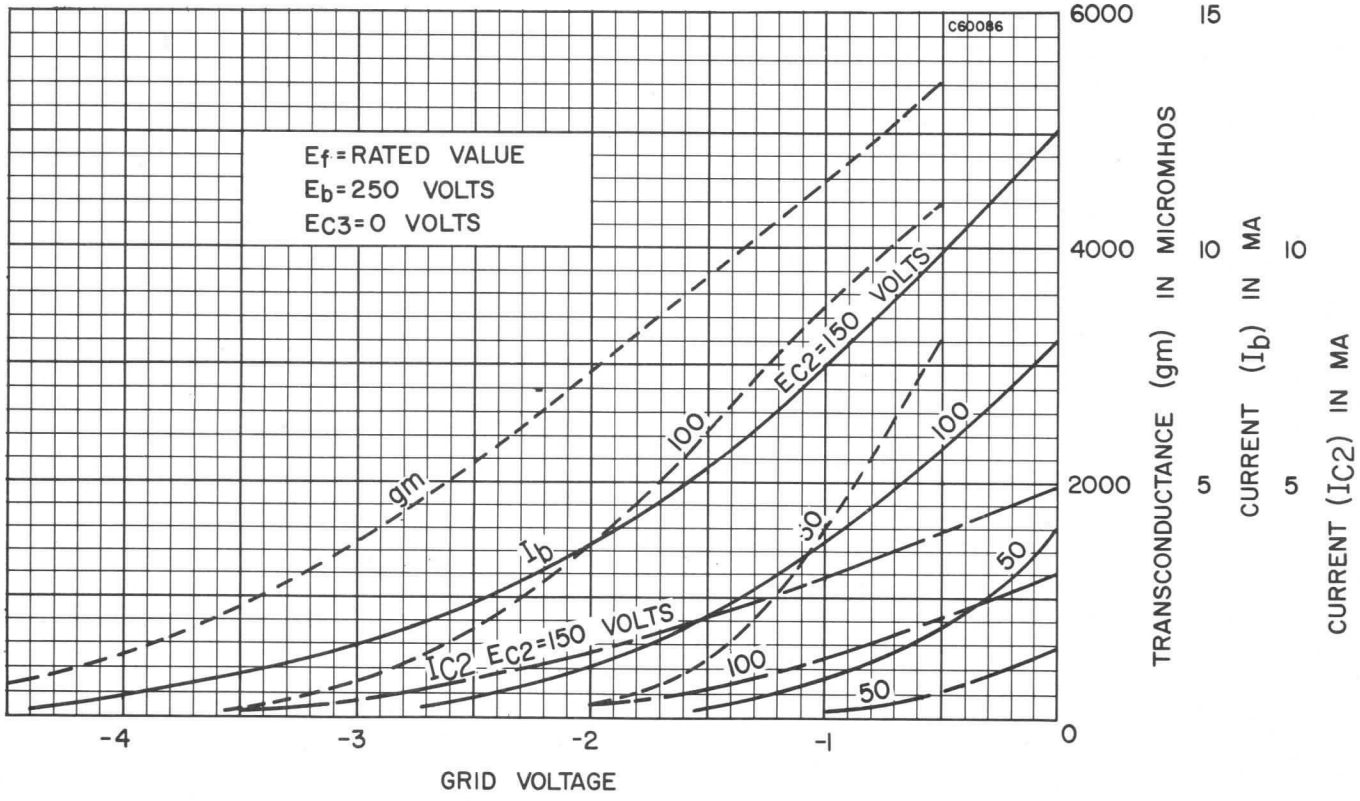

RATING CHART

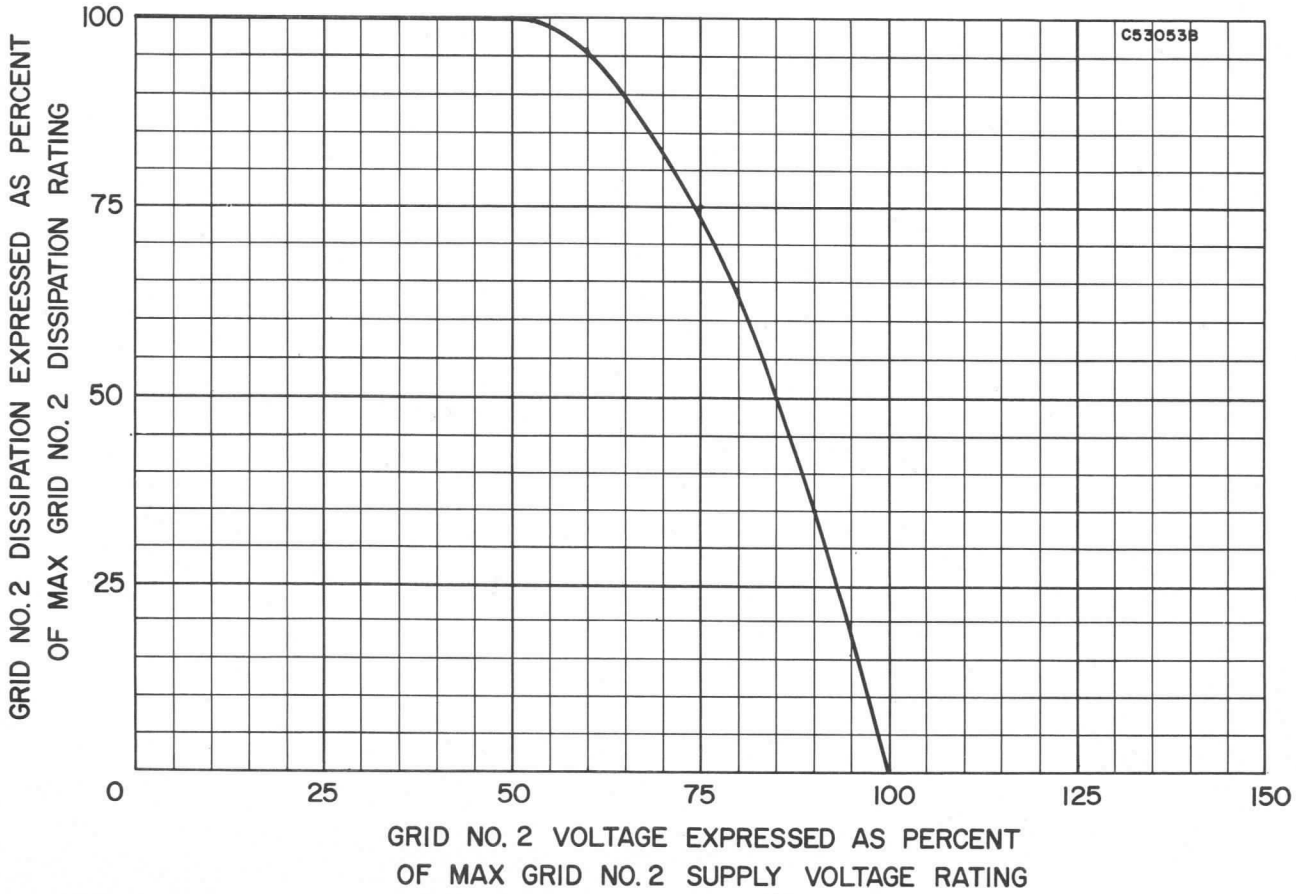

Type 6662/6BJ6 is designed specifically for use in mobile communications equipment. The 6662/6BJ6 may be operated without serious degradation under normal variations in supply voltage as encountered with automotive electrical systems. Also consistent with the requirements of the equipment the tube is capable of withstanding appreciable on-off cycling.

MECHANICAL DATA

Bulb	T-5½
Base	E7-1, Miniature Button, 7-Pin
Outline	5-2
Basing	7CM
Cathode	Coated Unipotential
Mounting Position	Any

ELECTRICAL DATA

HEATER CHARACTERISTICS

Heater Voltage[1]	6.3 Volts	
Heater Current	150 Ma	
Heater-Cathode Voltage (Design Center Values)		
Heater Positive with Respect to Cathode	100 Volts	Max.
Heater Negative with Respect to Cathode	100 Volts	Max.

DIRECT INTERELECTRODE CAPACITANCES

	Shielded	Unshielded		
Grid No. 1 to Plate	0.0035	0.0035	μμf	Max.
Input: g1 to (h+k+g2+g3+I.S.)	4.5	4.5	μμf	
Output: p to (h+k+g2+g3+I.S.)	5.5	5.5	μμf	

RATINGS (Design Center Values)

Plate Voltage	330 Volts	Max.
Grid No. 2 Supply Voltage	330 Volts	Max.
Grid No. 2 Voltage	See Rating Chart	
Positive Grid No. 1 Voltage	0 Volts	Max.
Negative Grid No. 1 Voltage	55 Volts	Max.
Plate Dissipation	3.3 Watts	Max.
Grid No. 2 Dissipation	0.65 Watt	Max.

CHARACTERISTICS AND TYPICAL OPERATION

Class A1 Amplifier

Plate Voltage	100	250	Volts
Grid No. 2 Voltage	100	100	Volts
Grid No. 3 Voltage	Connect to Cathode at Socket		
Cathode Bias Resistor	80	80	Ohms
Plate Current	9	9.2	Ma
Grid No. 2 Current	3.5	3.3	Ma
Transconductance	3650	3600	μmhos
Plate Resistance	0.25	1.3	Megohms
Ec1 for gm = 10 μmhos (Approx.)	−20	−20	Volts

SPECIAL TESTS AND RATINGS

Heater Cycling Ratings

Cycles of Intermittent Operation (Minimum) . . . . 2000 Cycles
Ef = 7.5 volts cycled for one minute on and one minute off.
Eb + Ec3 + Ec2 + Ec1 = 0 volts.
Ehk = 135 volts with heater positive with respect to cathode.

Average Transconductance at Reduced Heater Voltage . . 2900 μmhos
Ef = 5.0 volts, Eb = 250 volts, Ec3 = 0 volts, Ec2 = 100 volts,
Rk = 80 ohms (bypassed)

QUICK REFERENCE DATA

Sylvania Type 6662/6BJ6 is designed specifically for mobile operation. It is a T-5½ semi-remote cutoff pentode designed for use as a R-F or I-F amplifier.

Type 6662/6BJ6 possesses electrical characteristics essentially equivalent to Type 6BJ6.

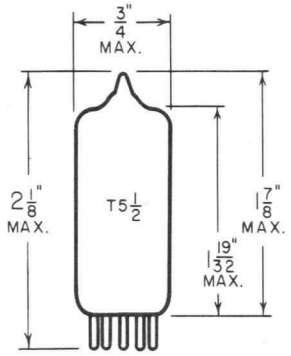

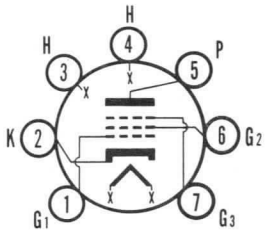

7CM

SYLVANIA
ELECTRONIC TUBES
A Division of
Sylvania Electric Products Inc.
RECEIVING TUBE
OPERATIONS
EMPORIUM, PA.

Prepared and Released By The
TECHNICAL PUBLICATIONS SECTION
EMPORIUM, PENNSYLVANIA

AUGUST, 1960

File Under
RECEIVING TUBES

NOTE:

1. *When operated from automotive electrical systems, the heater may be subjected to voltage variations as great as ± 20 percent. Although such extremes in heater voltage may be tolerated for short periods, increased equipment reliability can be achieved with improved supply-voltage regulation.*

RATING CHART

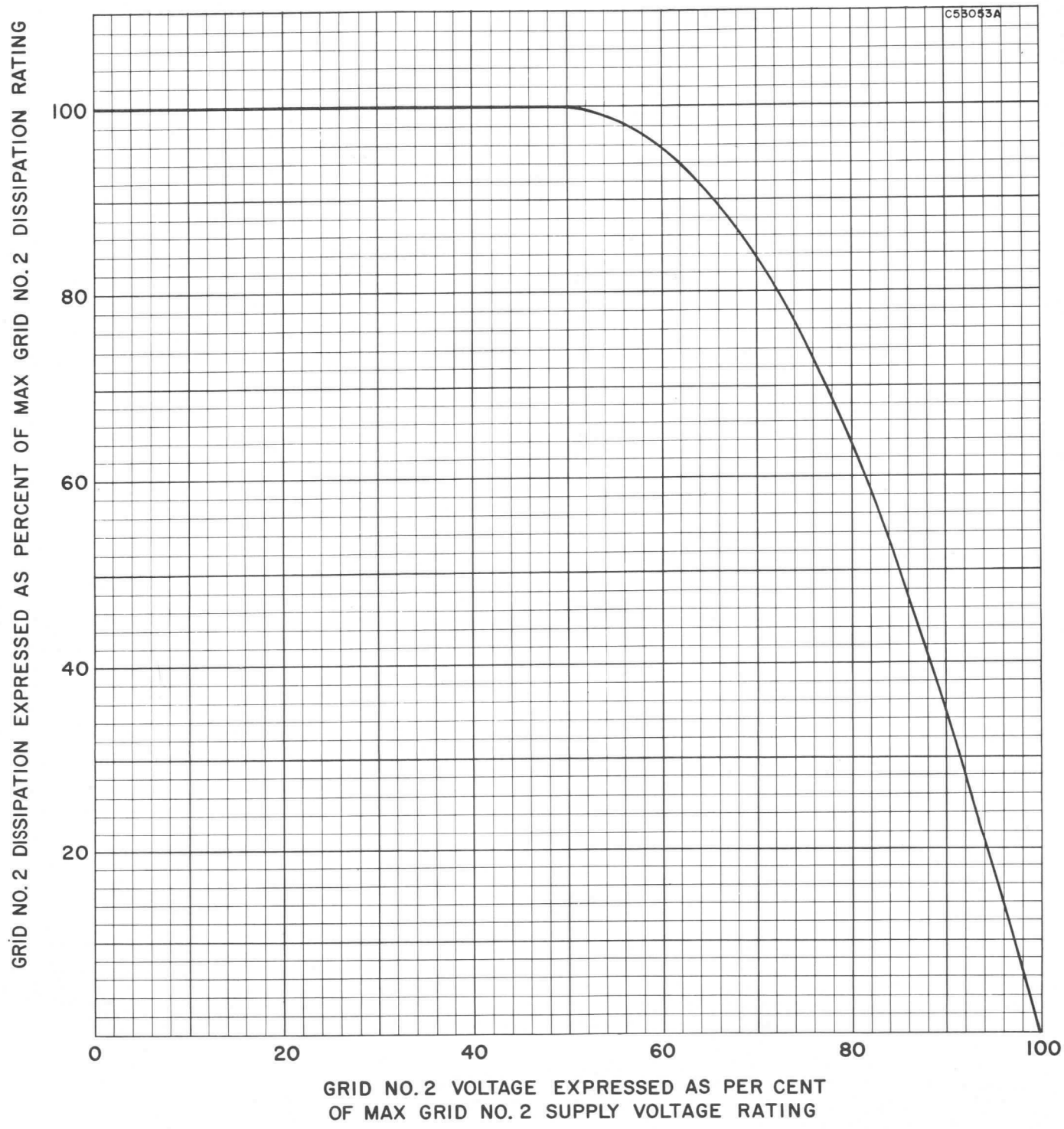

AVERAGE PLATE CHARACTERISTICS

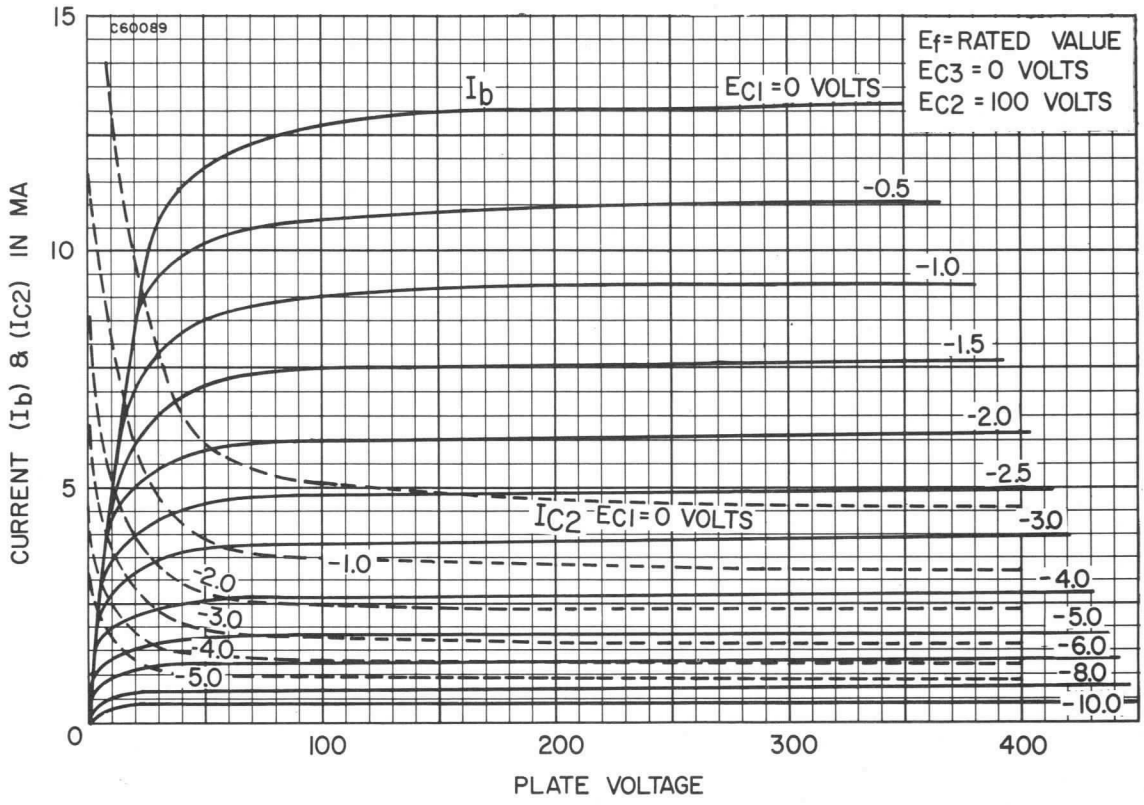

AVERAGE TRANSFER CHARACTERISTICS

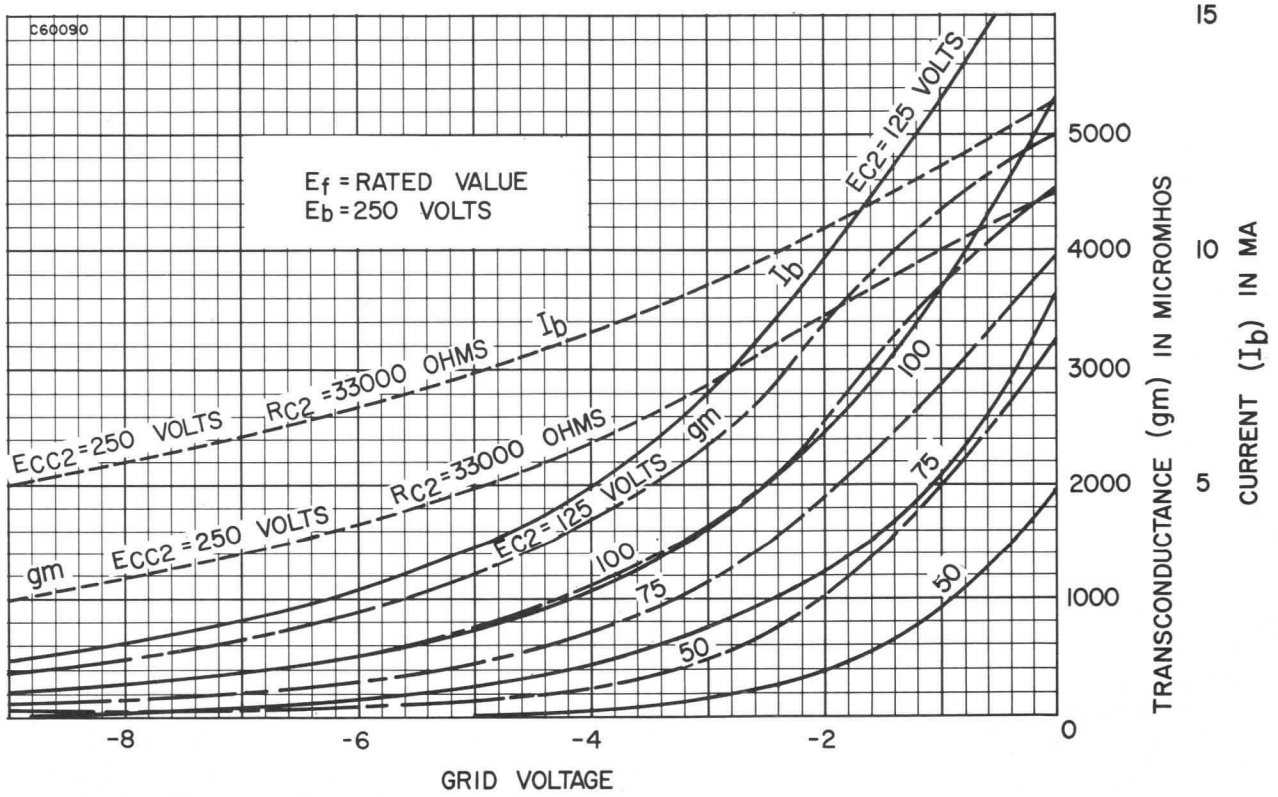

Type 6663/6AL5 is designed specifically for use in mobile communications equipment. The 6663/6AL5 may be operated without serious degradation under normal variations in supply voltage as encountered with automotive electrical systems. Also consistent with the requirements of the equipment, the tube is capable of withstanding appreciable on-off cycling.

MECHANICAL DATA

Bulb	T-5½
Base	E7-1, Miniature Button 7-Pin
Outline	5-1
Basing	6BT
Cathode	Coated Unipotential
Mounting Position	Any

ELECTRICAL DATA

HEATER CHARACTERISTICS

Heater Voltage[1]	6.3 Volts	
Heater Current	300 Ma	
Heater-Cathode Voltage (Design Center Values)		
Heater Negative with Respect to Cathode	275 Volts	Max.
Heater Positive with Respect to Cathode	100 Volts	Max.

DIRECT INTERELECTRODE CAPACITANCES

	Shielded	Unshielded
Plate Input (Each Section)	3.2	2.5 μμf
Plate to Plate	.026	.068 μμf
Cathode Input (Each Section)	3.6	3.4 μμf

RATINGS (Design Center Values)

Peak Inverse Plate Voltage	275 Volts	Max.
Peak Plate Current Per Plate[2]	350 Ma	Max.
DC Output Current Per Plate	10 Ma	Max.
Steady State Peak Plate Current Per Plate	60 Ma	Max.

CHARACTERISTICS

Voltage Drop at Ib = 60 Ma Per Plate	10 Volts

TYPICAL OPERATION

AC Plate Voltage Per Plate	117 Volts	
Effective Plate Supply Impedance Per Plate	300 Ohms	Max.
DC Output Current Per Plate	9.0 Ma	

SPECIAL TESTS AND RATINGS

Heater Cycling Rating

Cycles of Intermittent Operation (Minimum) . . . . 2000 Cycles

Ef = 7.5 volts cycled for one minute on and one minute off.
Eb = 0 volts, Ehk = 135 volts with heater positive with respect to cathode.

NOTES:

1. *When operated from automotive electrical systems, the heater may be subjected to voltage variations as great as ± 20 percent. Although such extremes in heater voltage may be tolerated for short periods, increased equipment reliability can be achieved with improved supply-voltage regulation.*
2. *Maximum duration 0.1 second.*

QUICK REFERENCE DATA

Sylvania Type 6663/6AL5 is designed specifically for mobile operation. It is a T-5½ duo diode intended for use in circuits as a clipper, clamper, isolator, switching device, detector, or FM discriminator.

Type 6663/6AL5 possesses electrical characteristics essentially equivalent to Type 6AL5.

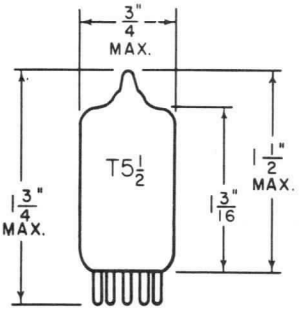

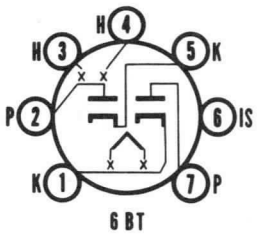

6 BT

SYLVANIA
ELECTRONIC TUBES
A Division of
Sylvania Electric Products Inc.
RECEIVING TUBE
OPERATIONS
EMPORIUM, PA.

Prepared and Released By The
TECHNICAL PUBLICATIONS SECTION
EMPORIUM, PENNSYLVANIA

AUGUST, 1960

File Under
RECEIVING TUBES

AVERAGE PLATE CHARACTERISTICS

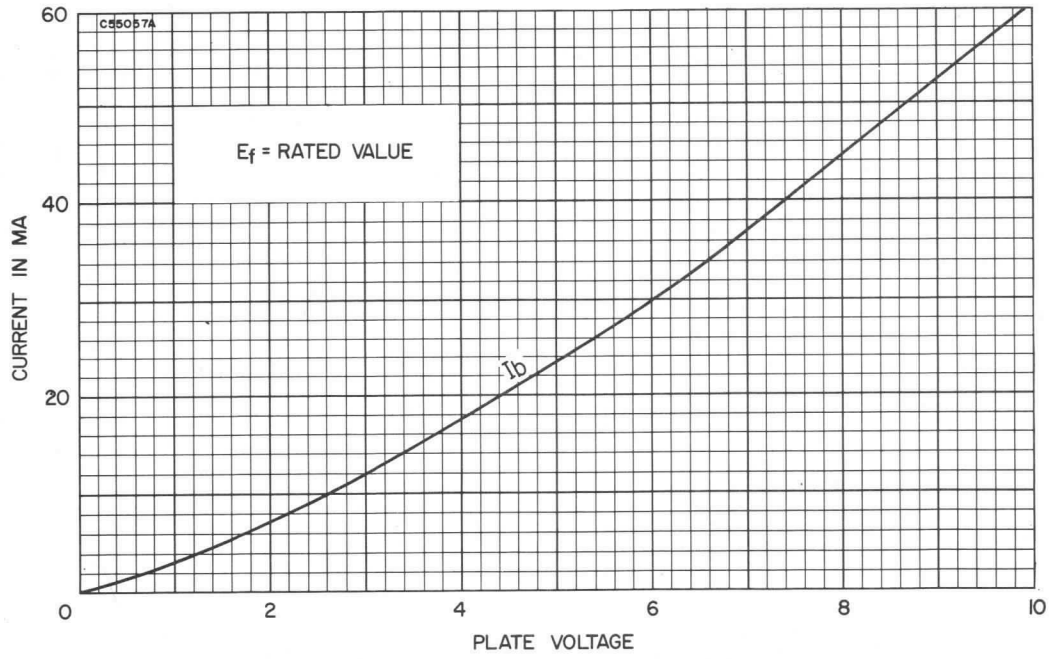

AVERAGE OPERATION CHARACTERISTICS

Half-Wave Rectification — Single Diode

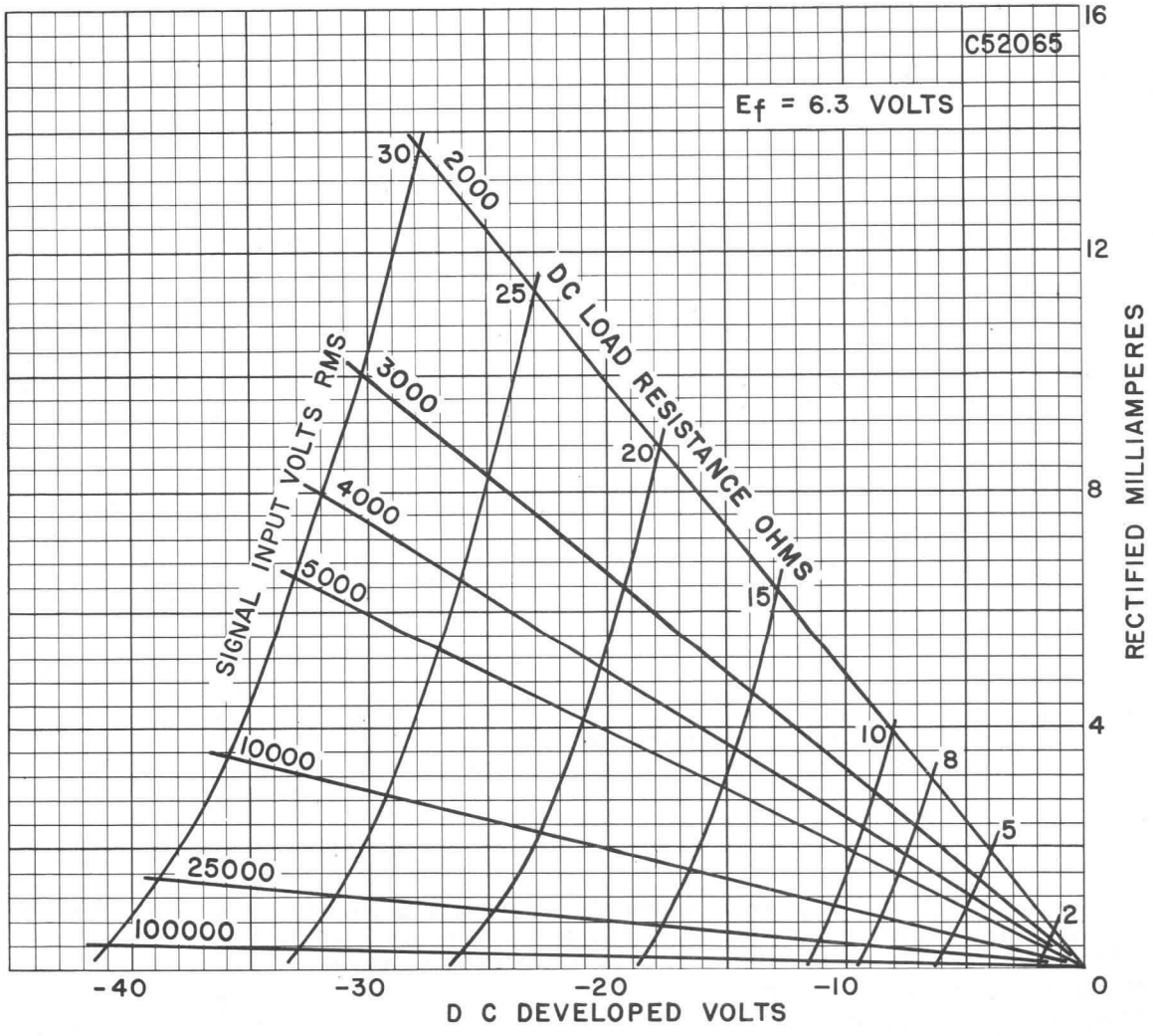

Type 6669/6AQ5 is designed specifically for use in mobile communications equipment. The 6669/6AQ5 may be operated without serious degradation under normal variations in supply voltage as encountered with automotive electrical systems. Also consistent with the requirements of the equipment, the tube is capable of withstanding appreciable on-off cycling.

MECHANICAL DATA

Bulb	T-5½
Base	E7-1, Miniature Button 7-Pin
Outline	5-3
Basing	7BZ
Cathode	Coated Unipotential
Mounting Position	Any

ELECTRICAL DATA

HEATER CHARACTERISTICS

Heater Voltage[1]	6.3 Volts	
Heater Current	450 Ma	
Heater-Cathode Voltage (Design Maximum Values)		
Heater Negative with Respect to Cathode	100 Volts	Max.
Heater Positive with Respect to Cathode	100 Volts	Max.

DIRECT INTERELECTRODE CAPACITANCES (Unshielded)

Grid to Plate	0.4 $\mu\mu$f
Input: g1 to (h+k+g2+g3)	8.0 $\mu\mu$f
Output: p to (h+k+g2+g3)	8.5 $\mu\mu$f

RATINGS (Design Maximum Values)

Class A1 Amplifier

Plate Voltage	250 Volts	Max.
Grid No. 2 Voltage	250 Volts	Max.
Plate Dissipation	12 Watts	Max.
Grid No. 2 Dissipation	2 Watts	Max.
Grid No. 1 Circuit Resistance		
Fixed Bias	0.1 Megohm	Max.
Cathode Bias	0.5 Megohm	Max.
Bulb Temperature (At Hottest Point)	225 °C	Max.

CHARACTERISTICS AND TYPICAL OPERATION

	Single Tube Class A1		Push-Pull Class AB1	
Plate Voltage	180	250	250	Volts
Grid No. 2 Voltage	180	250	250	Volts
Grid No. 1 Voltage	−8.5	−12.5	−15	Volts
Peak AF Grid No. 1 Voltage	8.5	12.5	15	Volts
Zero—Signal Plate Current	29	45	70	Ma
Maximum Signal Plate Current	30	47	79	Ma
Zero—Signal Grid No. 2 Current	3	4.5	5	Ma
Maximum—Signal Grid No. 2 Current	4	7.0	13	Ma
Plate Resistance (Approx.)	58,000	52,000	—	Ohms
Transconductance	3700	4100	—	μmhos
Load Resistance	5500	5000	—	Ohms
Load Resistance (P1 to P1)	—	—	10,000	Ohms
Maximum Signal Power Output	2.0	4.5	10	Watts
Total Harmonic Distortion (Approx.)	8	8	5	Percent

QUICK REFERENCE DATA

Sylvania Type 6669/6AQ5 is designed specifically for mobile operation. It is a T-5½ beam power pentode intended for use as an audio power amplifier.

Type 6669/6AQ5 possesses electrical characteristics essentially equivalent to Type 6AQ5.

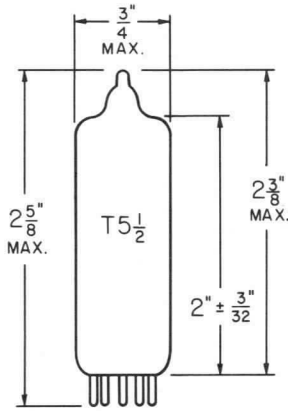

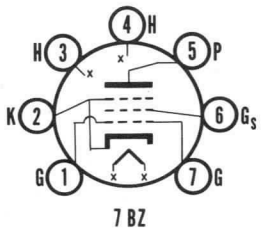

7BZ

SYLVANIA
ELECTRONIC TUBES
A Division of
Sylvania Electric Products Inc.
RECEIVING TUBE
OPERATIONS
EMPORIUM, PA.

Prepared and Released By The
TECHNICAL PUBLICATIONS SECTION
EMPORIUM, PENNSYLVANIA

MAY, 1961

File Under
RECEIVING TUBES

SPECIAL TESTS AND RATINGS

Heater-Cycling Life Test

Statistical sample operated for 2000 cycles to evaluate and control heater-cathode defects. Condition of test include Ef = 7.5 volts cycled for one minute on and one minute off, Eb + Ec2 + Ec1 = 0 volts and Ehk = 135 volts with heater positive with respect to cathode.

Average Power Output at Reduced Heater Voltage . . . . . 4.1 Watts

Ef = 5.0 volts, Eb = 250 volts, Ec2 = 250 volts, Ec1 = –12.5 volts, R1 = 5000 ohms, Esig = 8.8 volts (RMS).

NOTES:

1. *When operated from automotive electrical systems, the heater may be subjected to voltage variations as great as ±2(percent. Although such extremes in heater-voltage may be tolerated for short periods, increased equipment reliability ca be achieved with improved supply-voltage regulation.*

AVERAGE PLATE CHARACTERISTICS

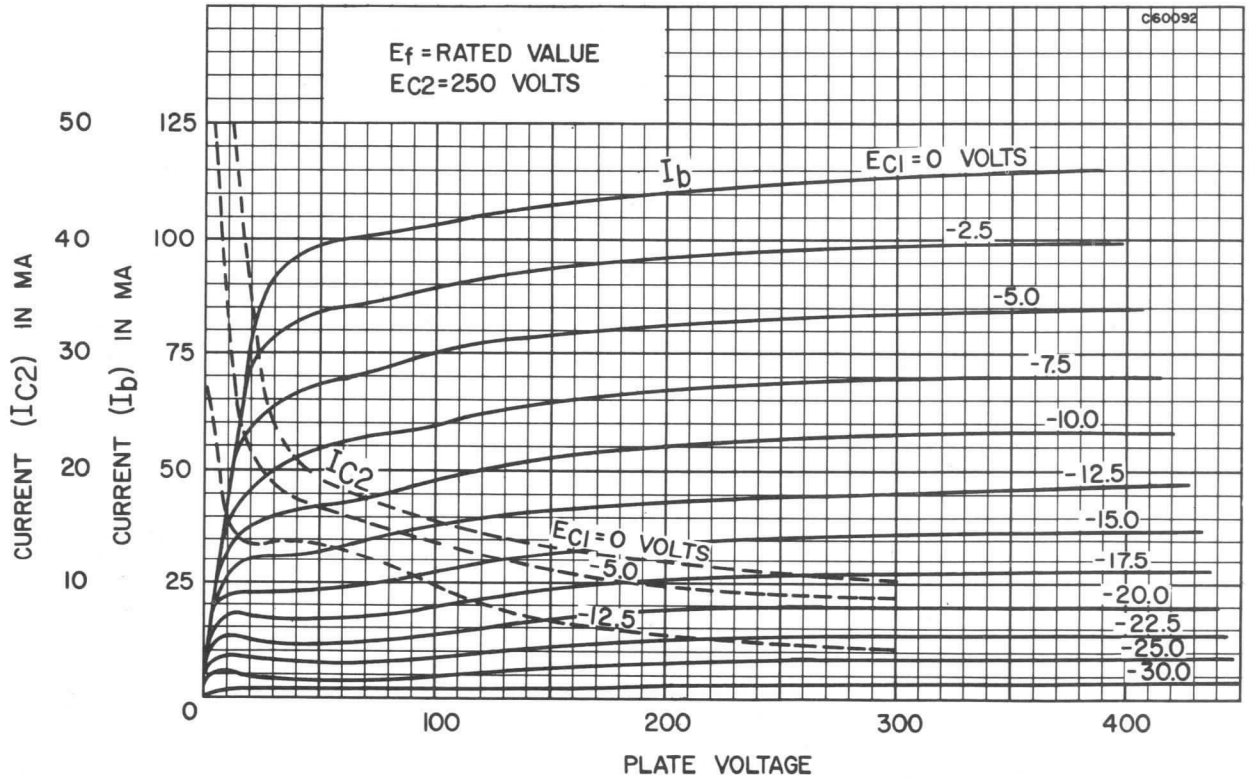

AVERAGE PLATE CHARACTERISTICS

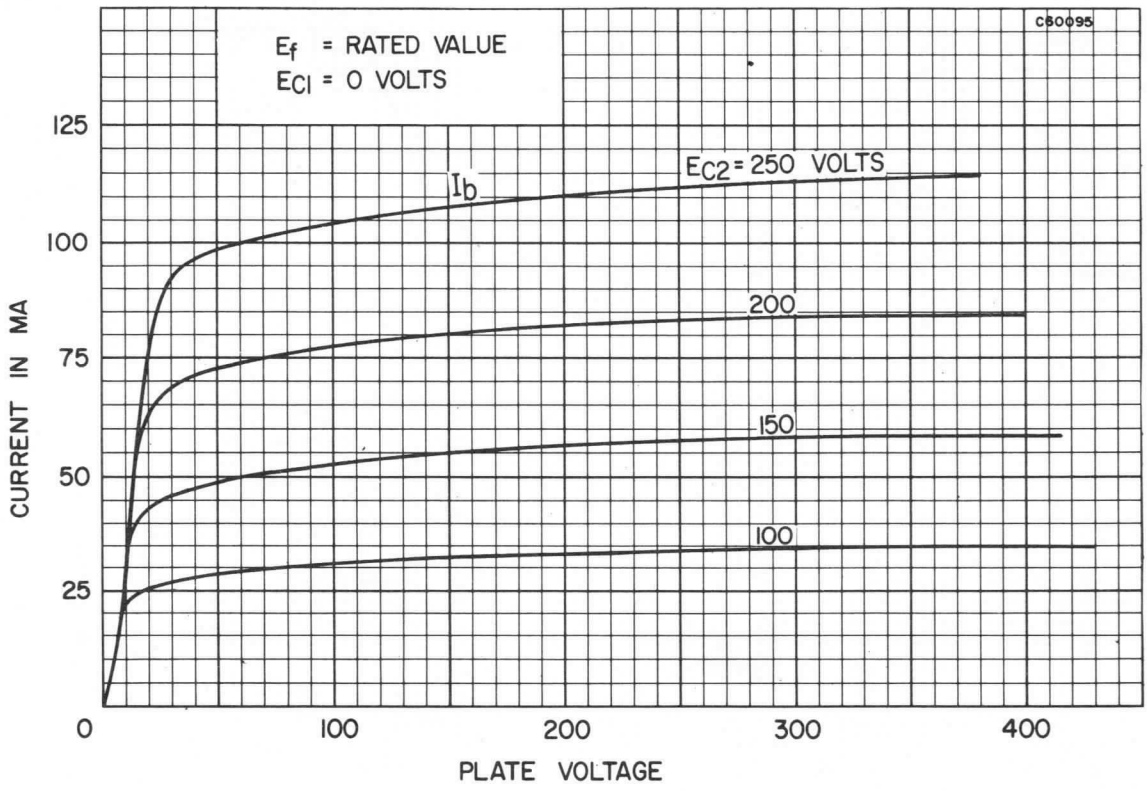

AVERAGE PLATE CHARACTERISTICS
(Triode Connected)

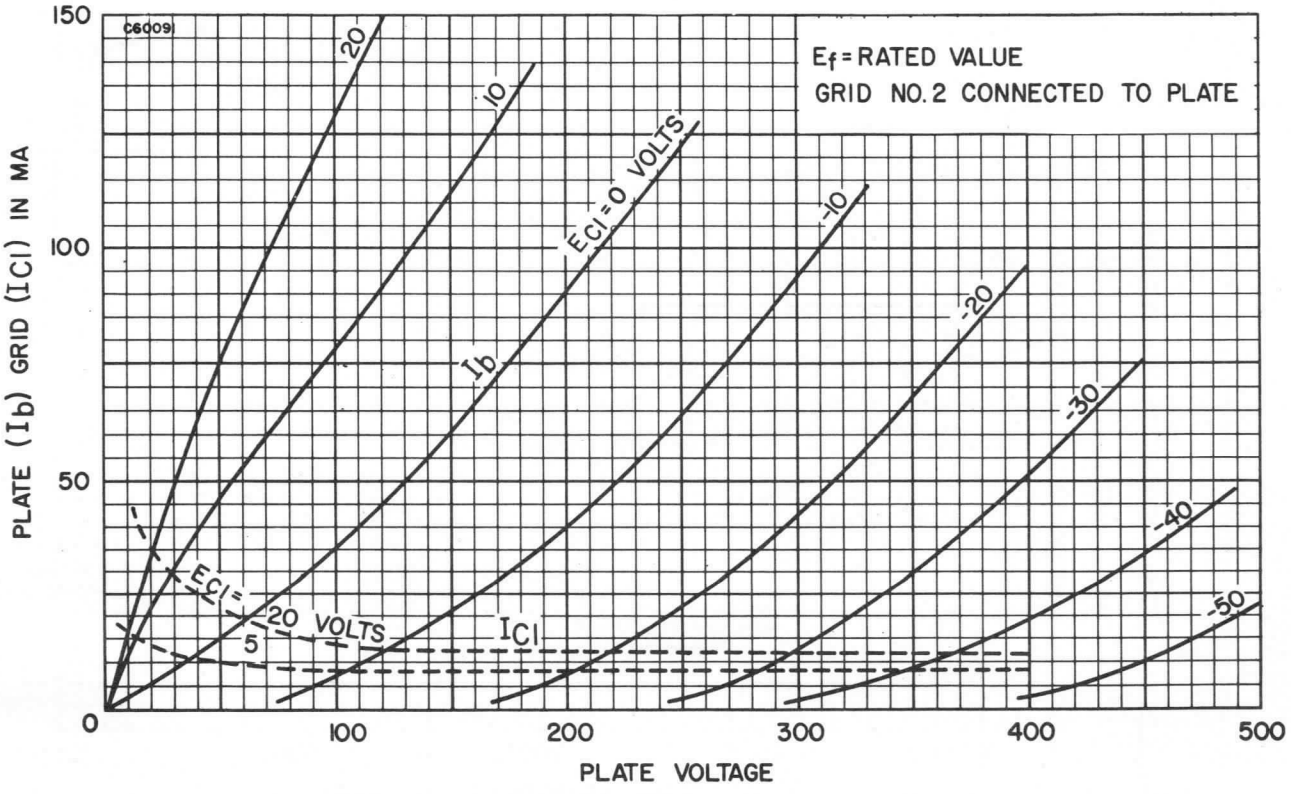

AVERAGE TRANSFER CHARACTERISTICS

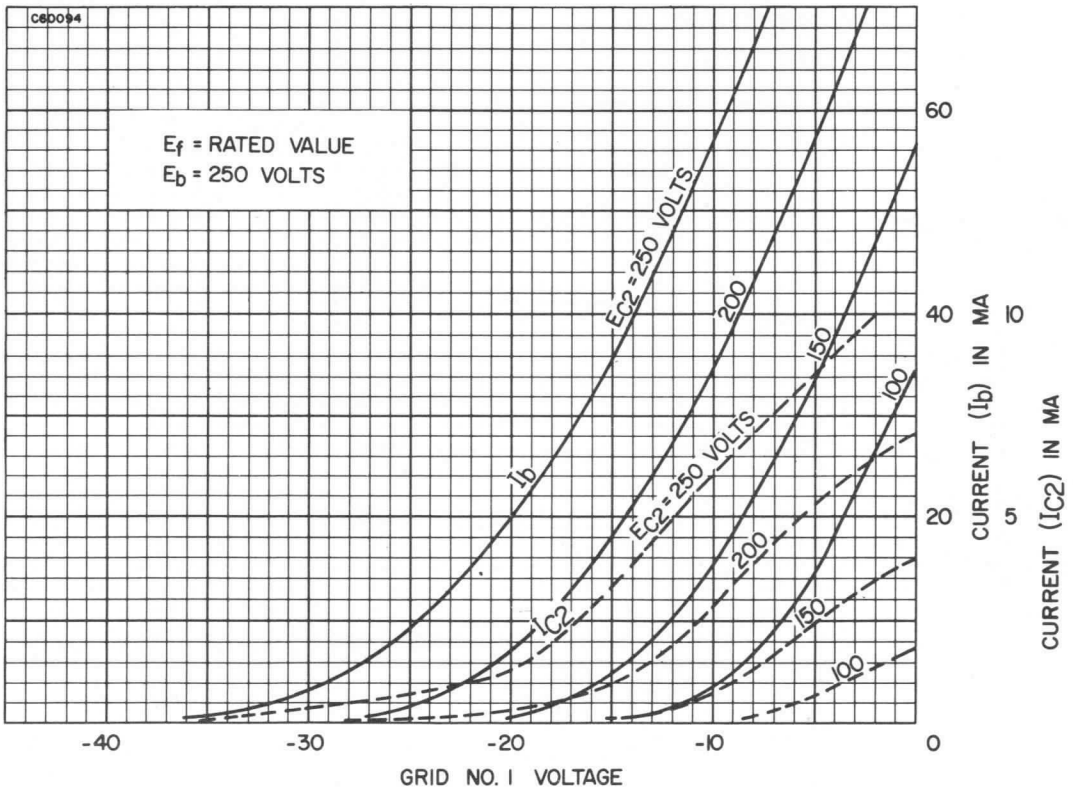

OPERATION CHARACTERISTICS

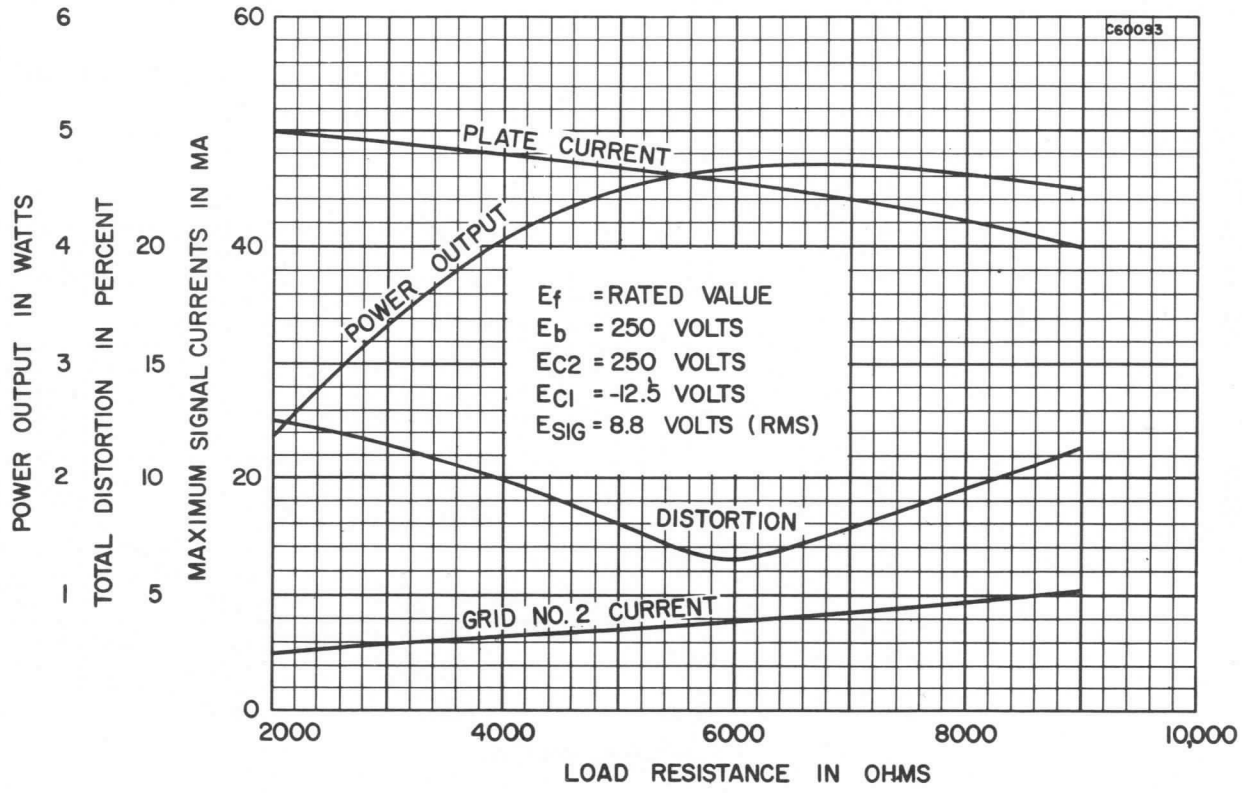

Type 6677/6CL6 is designed specifically for use in mobile communications equipment. The 6677/6CL6 may be operated without serious degradation under normal variations in supply voltage as encountered with automotive electrical systems. Also consistent with the requirements of the equipment, the tube is capable of withstanding appreciable on-off cycling.

MECHANICAL DATA

Bulb	T-6½
Base	Small Button Noval 9-Pin
Outline	6-3
Basing	9BV
Cathode	Coated Unipotential
Mounting Position	Any

ELECTRICAL DATA

HEATER CHARACTERISTICS

Heater Voltage[1]	6.3 Volts	
Heater Current	650 Ma	
Heater-Cathode Voltage (Design Maximum Values)		
Heater Negative with Respect to Cathode	100 Volts	Max.
Heater Positive with Respect to Cathode	100 Volts	Max.

DIRECT INTERELECTRODE CAPACITANCES (Unshielded)

Grid No. 1 to Plate	0.12 $\mu\mu$f
Input	11 $\mu\mu$f
Output	5.5 $\mu\mu$f

RATINGS (Design Maximum Values)

Plate Voltage	330 Volts	Max.
Grid No. 2 Voltage	See Rating Chart	
Grid No. 2 Voltage Supply	330 Volts	Max.
Grid No. 3 Voltage	0 Volts	Max.
Grid No. 1 Voltage		
Negative Bias Value	50 Volts	Max.
Positive Bias Value	0 Volts	Max.
Plate Dissipation	8.5 Watts	Max.
Grid No. 2 Input	2.0 Watts	Max.
Grid No. 1 Circuit Resistance		
Fixed Bias	0.1 Megohm	Max.
Cathode Bias	0.5 Megohm	Max.
Bulb Temperature (At Hottest Point)	210 °C	Max.

CHARACTERISTICS

Plate Voltage	250 Volts
Grid No. 2 Voltage	150 Volts
Grid No. 3 Voltage — Connected to Cathode at Socket	
Grid No. 1 Bias Voltage	−3 Volts
Peak AF Grid No. 1 Signal Voltage	3 Volts
Zero Signal Plate Current	30 Ma
Maximum Signal Plate Current	31 Ma
Zero Signal Grid No. 2 Current	7 Ma
Maximum Signal Grid No. 2 Current	7.2 Ma
Transconductance	11,000 μmhos
Plate Resistance (Approx.)	0.15 Megohm
Load Resistance	7500 Ohms
Total Harmonic Distortion	8 Percent
Maximum Signal Power Output	2.8 Watts
Ec1 for Ib = 10 μa (Approx.)	−14 Volts

QUICK REFERENCE DATA

Sylvania Type 6677/6CL6 is designed specifically for mobile operation. It is a T-6½ beam power pentode intended for use as an R-F power oscillator or amplifier.

Type 6677/6CL6 possesses electrical characteristics essentially equivalent to Type 6CL6.

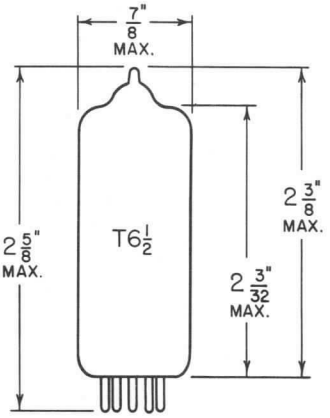

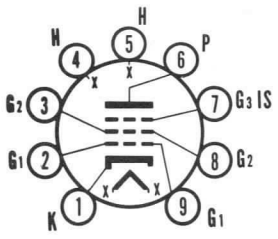

SYLVANIA
ELECTRONIC TUBES
A Division of
Sylvania Electric Products Inc.
RECEIVING TUBE
OPERATIONS
EMPORIUM, PA.

Prepared and Released By The
TECHNICAL PUBLICATIONS SECTION
EMPORIUM, PENNSYLVANIA

MAY, 1961

File Under
RECEIVING TUBES

SPECIAL TESTS AND RATINGS

Heater-Cycling Life Tests

Statistical sample operated for 2000 cycles to evaluate and control heater-cathode defects. Conditions of test include Ef = 7.5 volts cycled for one minute on and one minute off. Eb + Ec3 + Ec2 + Ec1 = 0 volts and Ehk = 135 volts with heater positive with respect to cathode.

Average Transconductance at Reduced Heater Voltage . . . . . 8800 μmhos

Ef = 5.0 volts, Eb = 250 volts, Ec3 = 0 volts, Ec2 = 150 volts and Ec1 = –3.0 volts.

NOTES:

1. *When operated from automotive electrical systems, the heater may be subjected to voltage variations as great as ±20 percent. Although such extremes in heater-voltage may be tolerated for short periods, increased equipment reliability can be achieved with improved supply-voltage regulation.*

AVERAGE PLATE CHARACTERISTICS

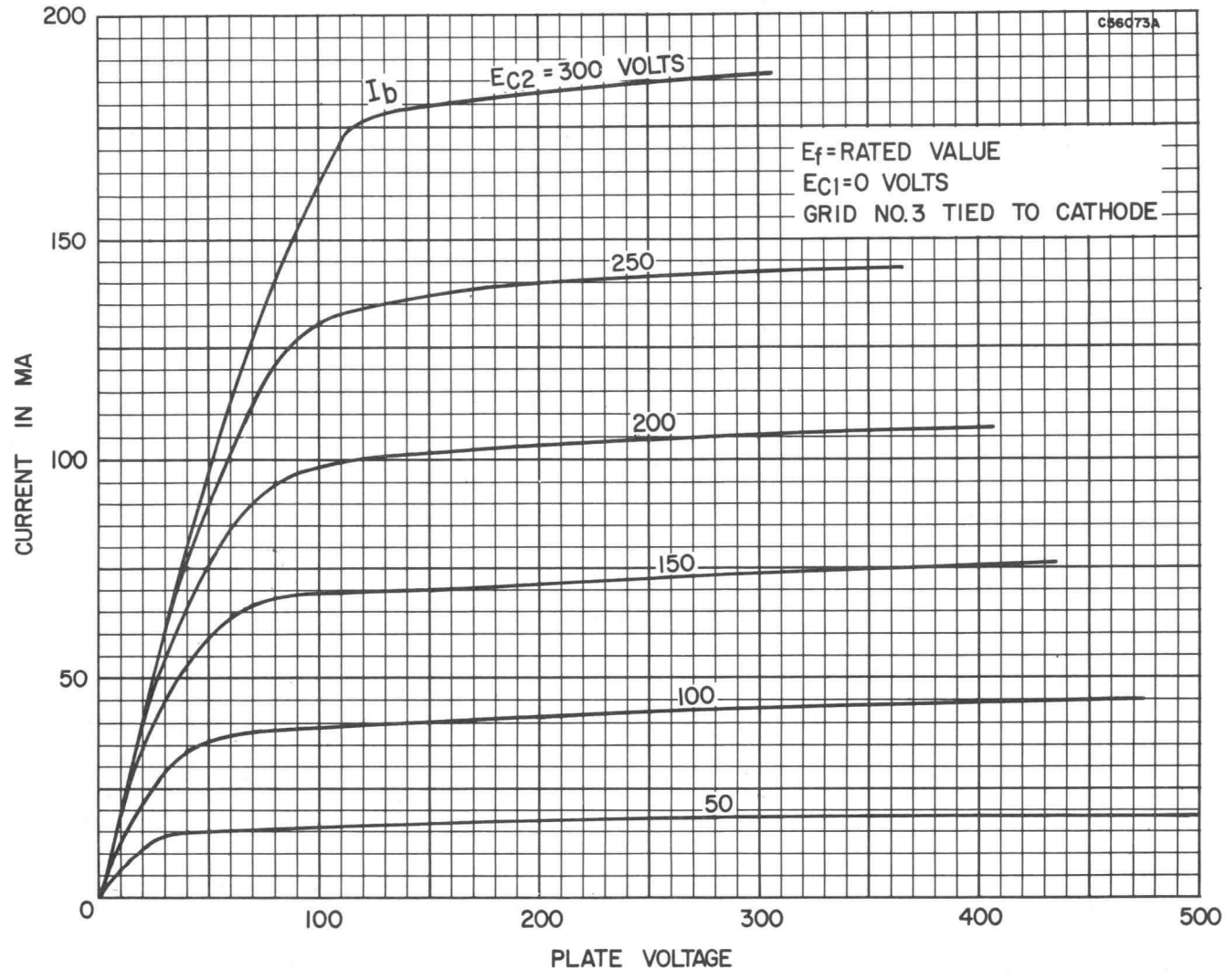

AVERAGE PLATE CHARACTERISTICS

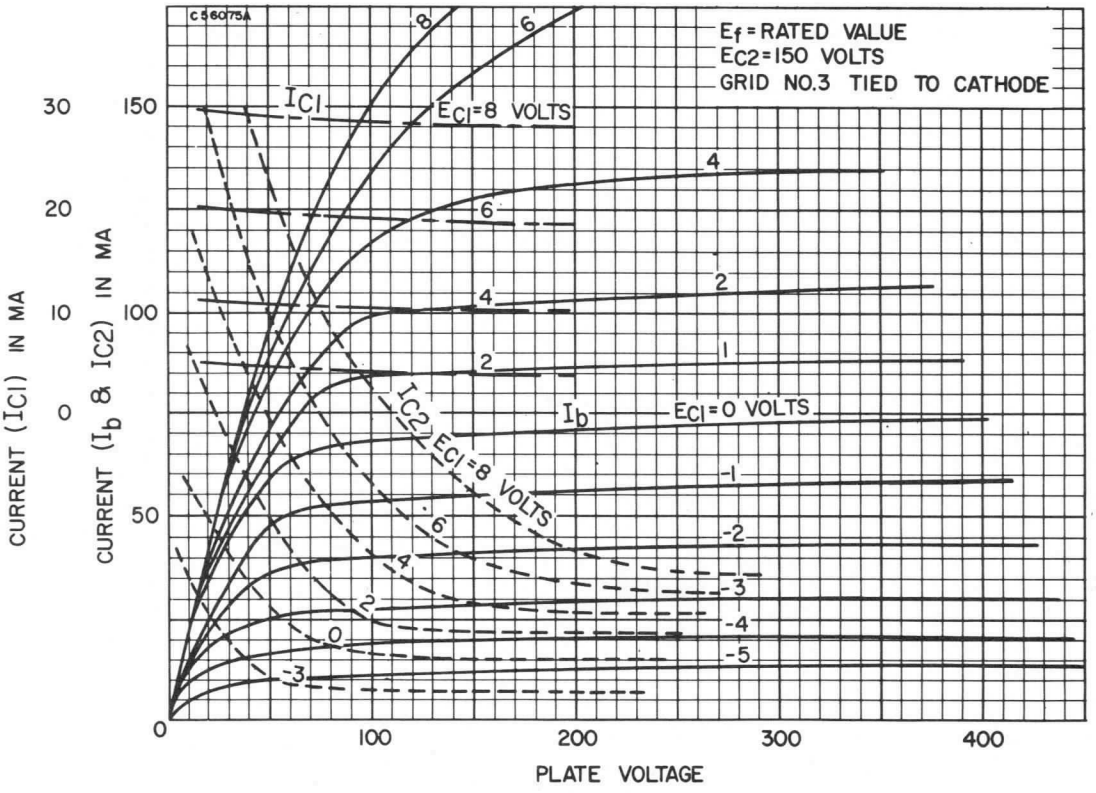

AVERAGE PLATE CHARACTERISTICS
(Triode Connected)

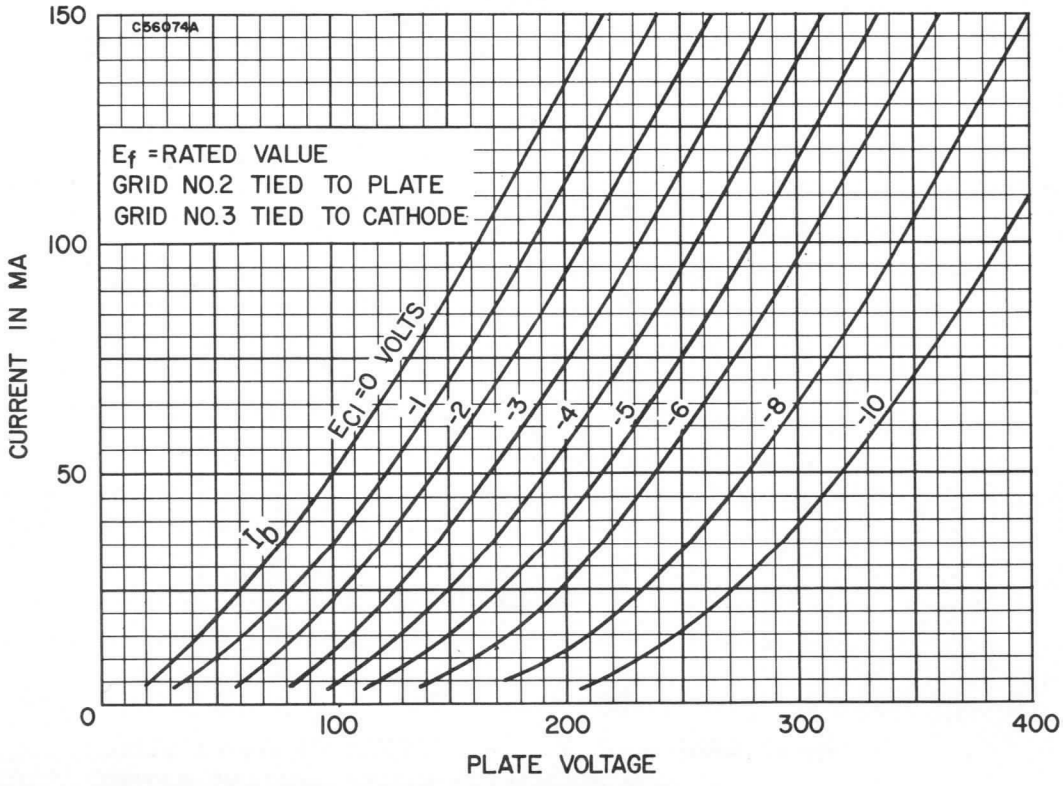

AVERAGE TRANSFER CHARACTERISTICS

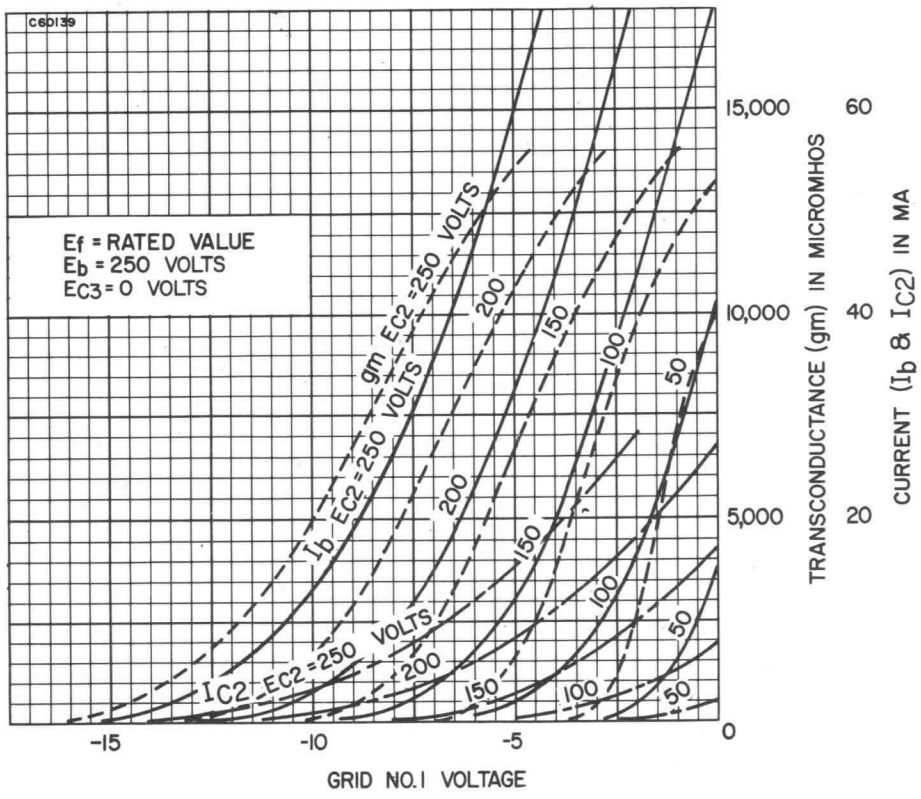

RATING CHART

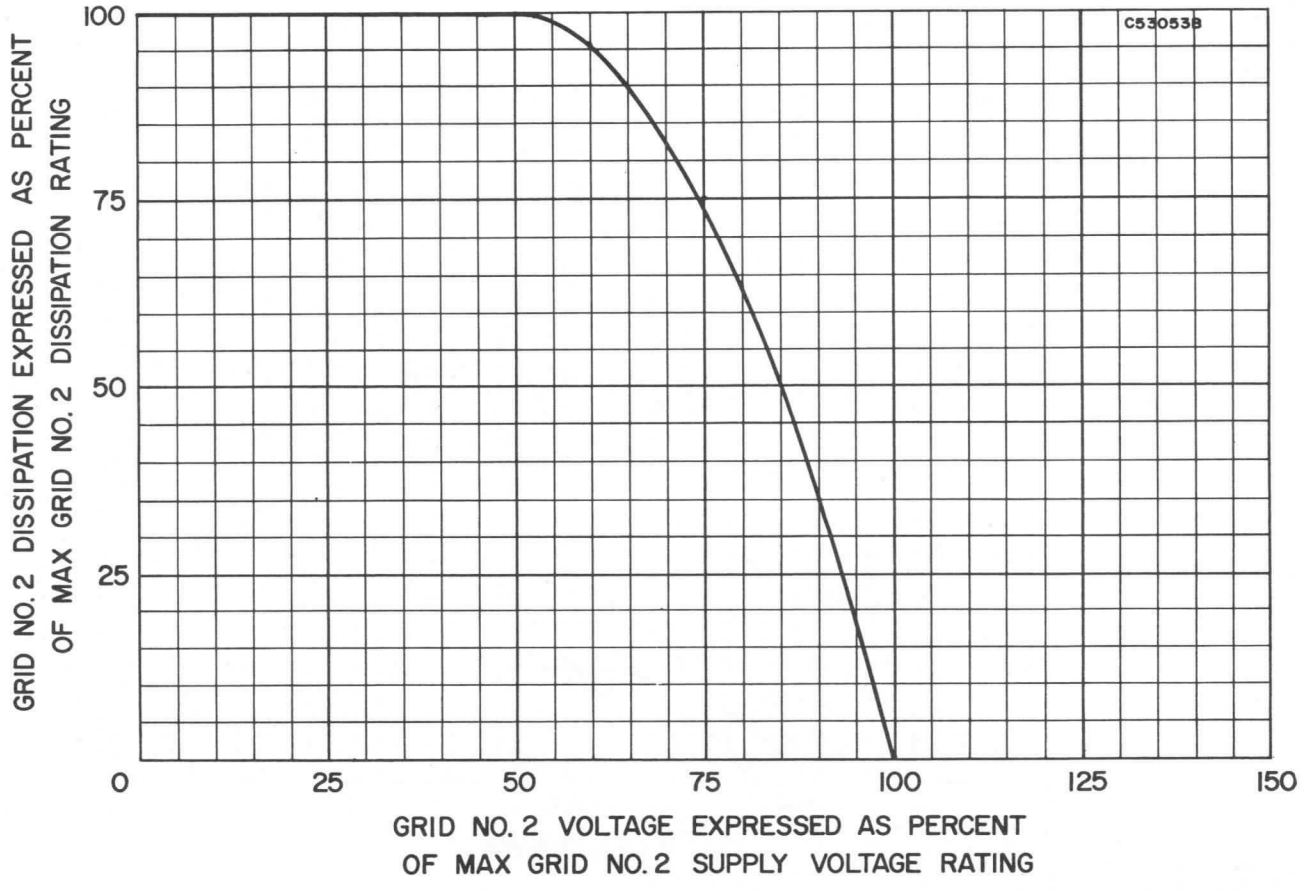

Type 6678/6U8 is designed specifically for use in mobile communications equipment. The 6678/6U8 may be operated without serious degradation under normal variations in supply voltage as encountered with automotive electrical systems. Also consistent with the requirements of the equipment the tube is capable of withstanding appreciable on-off cycling.

MECHANICAL DATA

Bulb	T-6½
Base	E9-1, Small Button 9-Pin
Outline	6-2
Basing	9AE
Cathode	Coated Unipotential
Mounting Position	Any

ELECTRICAL DATA

HEATER CHARACTERISTICS

Heater Voltage[1]	6.3 Volts	
Heater Current	450 Ma	
Heater-Cathode Voltage (Design Maximum Values)		
Heater Negative with Respect to Cathode		
Total DC and Peak	200 Volts	Max.
Heater Positive with Respect to Cathode		
DC	100 Volts	Max.
Total DC and Peak	200 Volts	Max.

DIRECT INTERELECTRODE CAPACITANCES

	Shielded	Unshielded	
Pentode Section			
Grid No. 1 to Plate	.006	.01 μμf	Max.
Input: g1 to (h+k+g2+g3+I.S.)	5.0	5.0 μμf	
Output: p to (h+k+g2+g3+I.S.)	3.5	2.6 μμf	
Cathode to Heater	3.0	3.0 μμf	
Triode Section			
Grid to Plate	1.8	1.8 μμf	
Input: g to (h+Pk+Tk+g3+I.S.)	2.5	2.5 μμf	
Output: p to (h+Pk+Tk+g3+I.S.)	1.0	0.4 μμf	
Cathode to Heater	3.0	3.0 μμf	
Coupling			
Pentode Grid No. 1 to Triode Plate	0.2	0.2 μμf	Max.
Pentode Plate to Triode Plate	.02	0.1 μμf	Max.

RATINGS (Design Maximum System)

	Triode Section	Pentode Section	
Plate Voltage	330	330 Volts	Max.
Grid No. 2 Supply Voltage		330 Volts	Max.
Grid No. 2 Voltage	See Rating Chart		
Positive DC Grid No. 1 Voltage	0	0 Volts	Max.
Plate Dissipation	3.0	3.0 Watts	Max.
Grid No. 2 Dissipation		0.55 Watt	Max.

CHARACTERISTICS AND TYPICAL OPERATION

	Triode Section	Pentode Section	
Plate Voltage	150	250 Volts	
Grid No. 2 Voltage		110 Volts	
Cathode Bias Resistor	56	68 Ohms	
Plate Current	18	10 Ma	
Grid No. 2 Current		3.5 Ma	
Transconductance	8500	5200 μmhos	
Amplification Factor	40		
Plate Resistance (Approx.)	5000	400K Ohms	
Ec1 for Ib = 10 μa (Approx.)	−10	−12 Volts	

QUICK REFERENCE DATA

Sylvania Type 6678/6U8 is designed specifically for mobile operation. It is a T-6½ triode-pentode intended for VHF OSC/MIXER service.

Type 6678/6U8 possesses electrical characteristics essentially equivalent to Type 6U8.

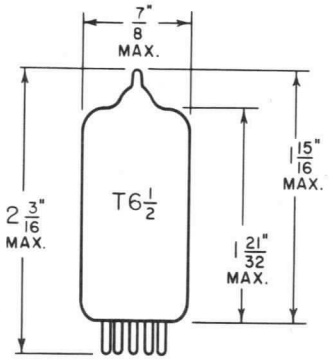

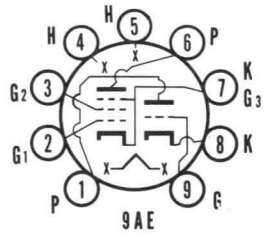

SYLVANIA
ELECTRONIC TUBES
A Division of
Sylvania Electric Products Inc.
RECEIVING TUBE
OPERATIONS
EMPORIUM, PA.

Prepared and Released By The
TECHNICAL PUBLICATIONS SECTION
EMPORIUM, PENNSYLVANIA

AUGUST, 1960

File Under
RECEIVING TUBES

SPECIAL TESTS AND RATINGS

Heater Cycling Ratings

Cycles of Intermittent Operation (Minimum) . . . . . 2000 Cycles
Ef = 7.5 volts cycled for one minute on and one minute off.
Eb + Ec2 + Ec1 = 0 volts.
Ehk = 135 volts with heater positive with respect to cathode.

Average Transconductance at Reduced Heater Voltage

Pentode Section . . . . . 4100 μmhos
Ef = 5.0 volts, Eb = 250 volts, Ec2 = 110 volts,
Rk = 68 ohms (bypassed)

Average Transconductance at Reduced Heater Voltage

Triode Section . . . . . 6800 μmhos
Ef = 5.0 volts, Eb = 150 volts,
Rk = 56 ohms (bypassed)

NOTE:

1. *When operated from automotive electrical systems, the heater may be subjected to voltage variations as great as ± 20 percent. Although such extremes in heater voltage may be tolerated for short periods, increased equipment reliability can be achieved with improved supply-voltage regulation.*

RATING CHART

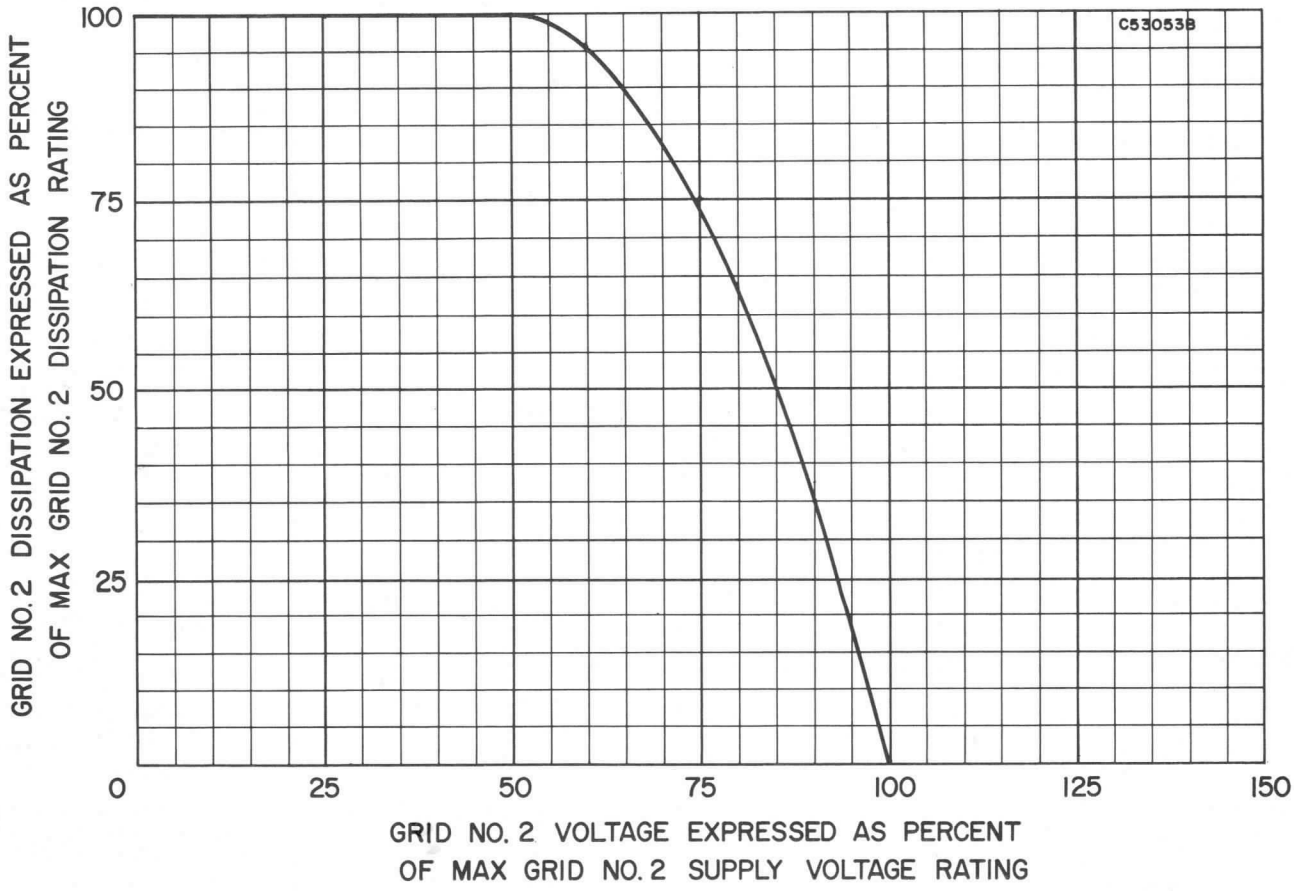

AVERAGE PLATE CHARACTERISTICS
(Triode Section)

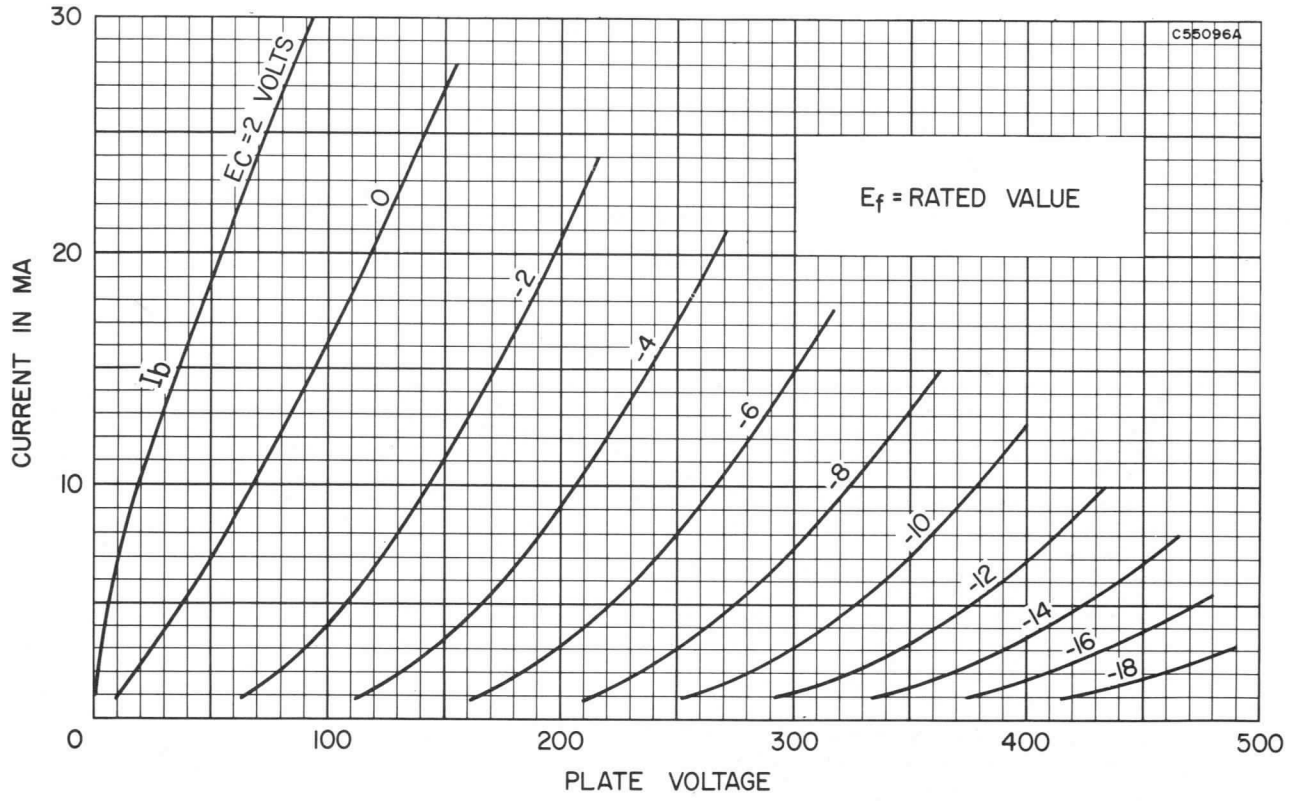

AVERAGE TRANSFER CHARACTERISTICS
(Triode Section)

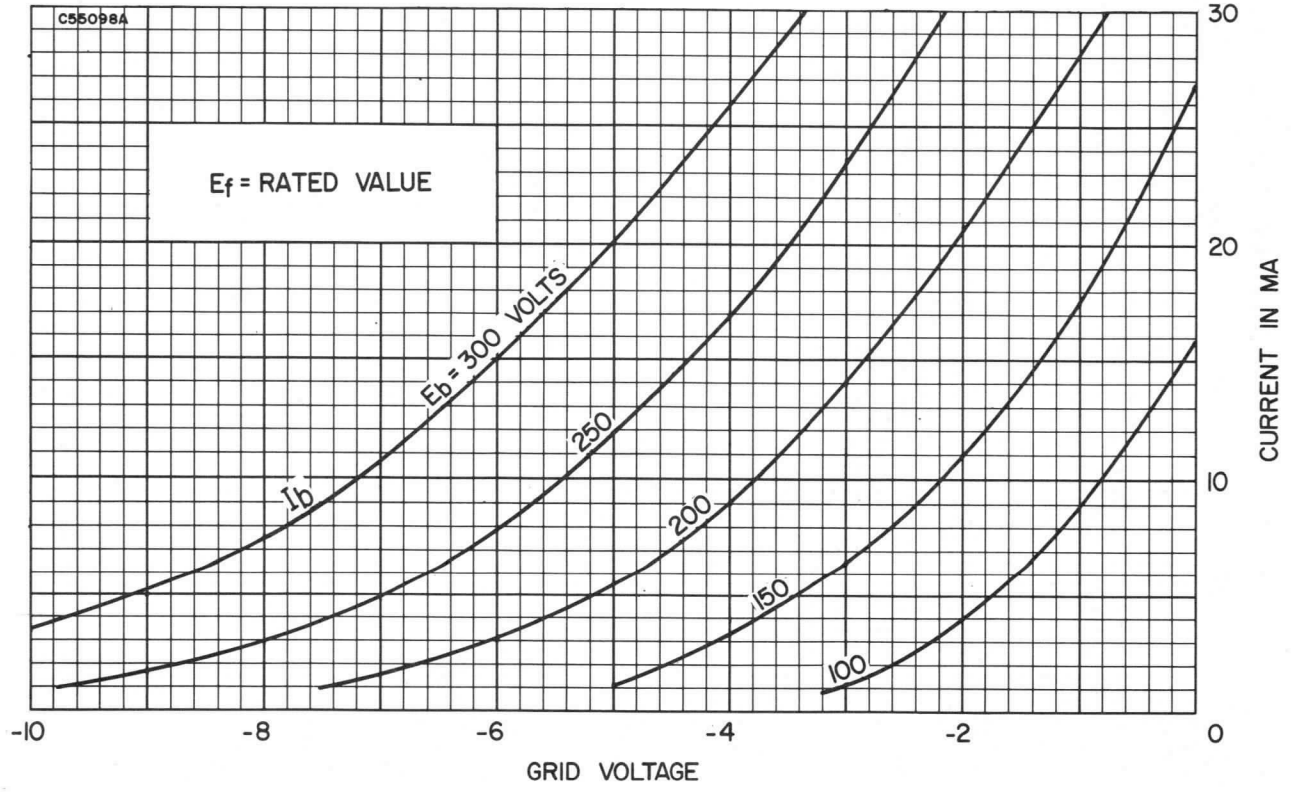

AVERAGE TRANSFER CHARACTERISTICS
(Triode Section)

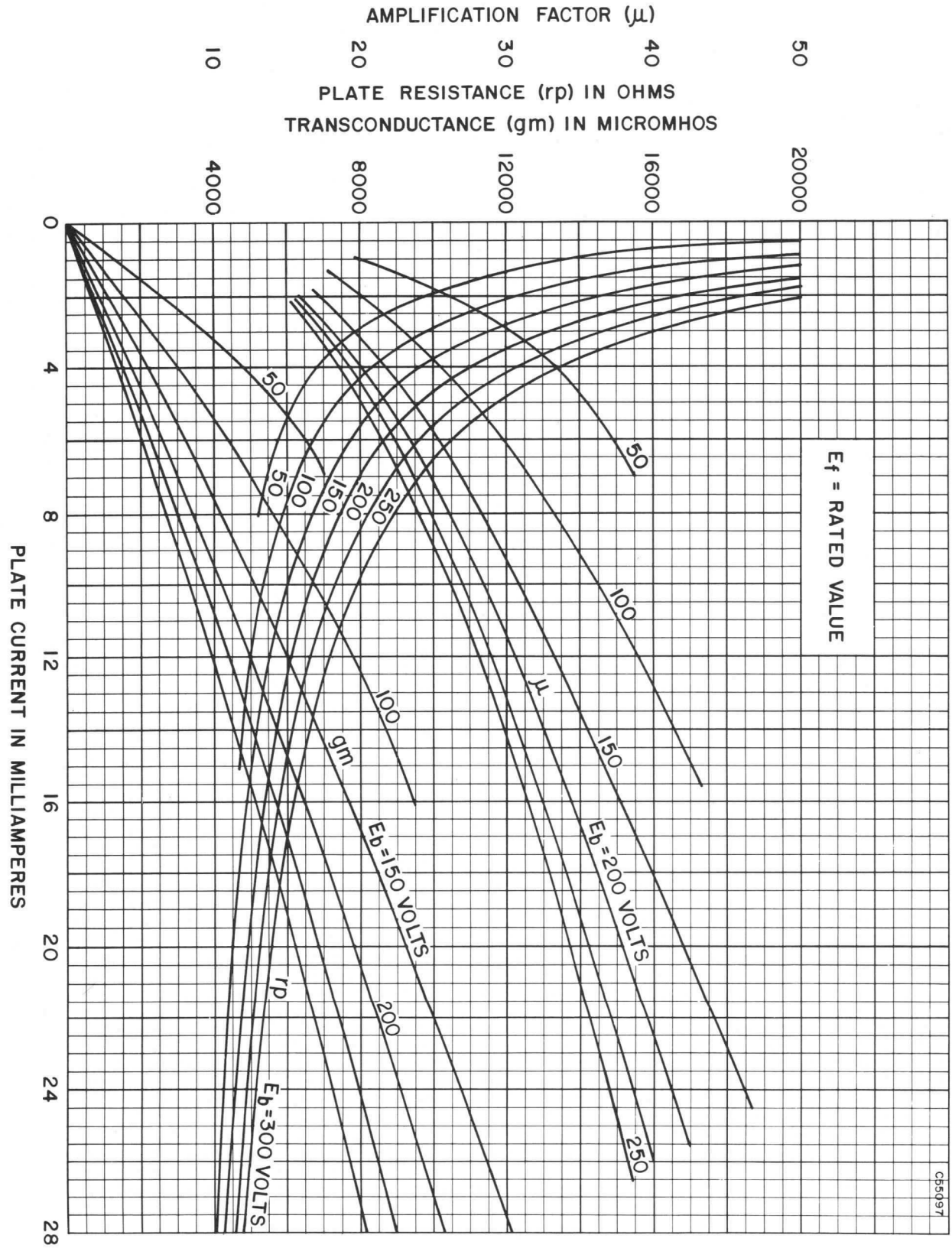

AVERAGE PLATE CHARACTERISTICS
(Pentode Section)

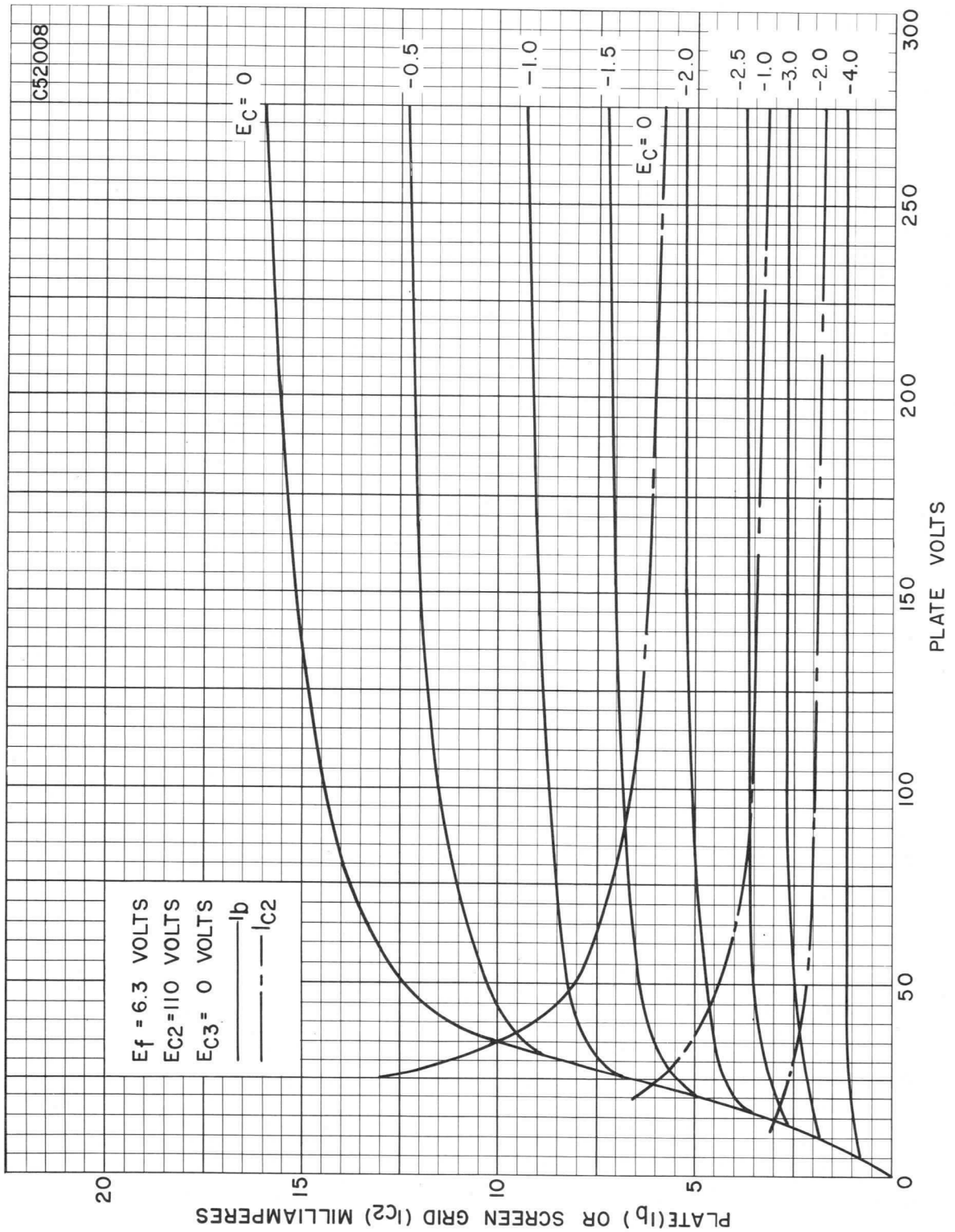

AVERAGE TRANSFER CHARACTERISTICS
(Pentode Section)

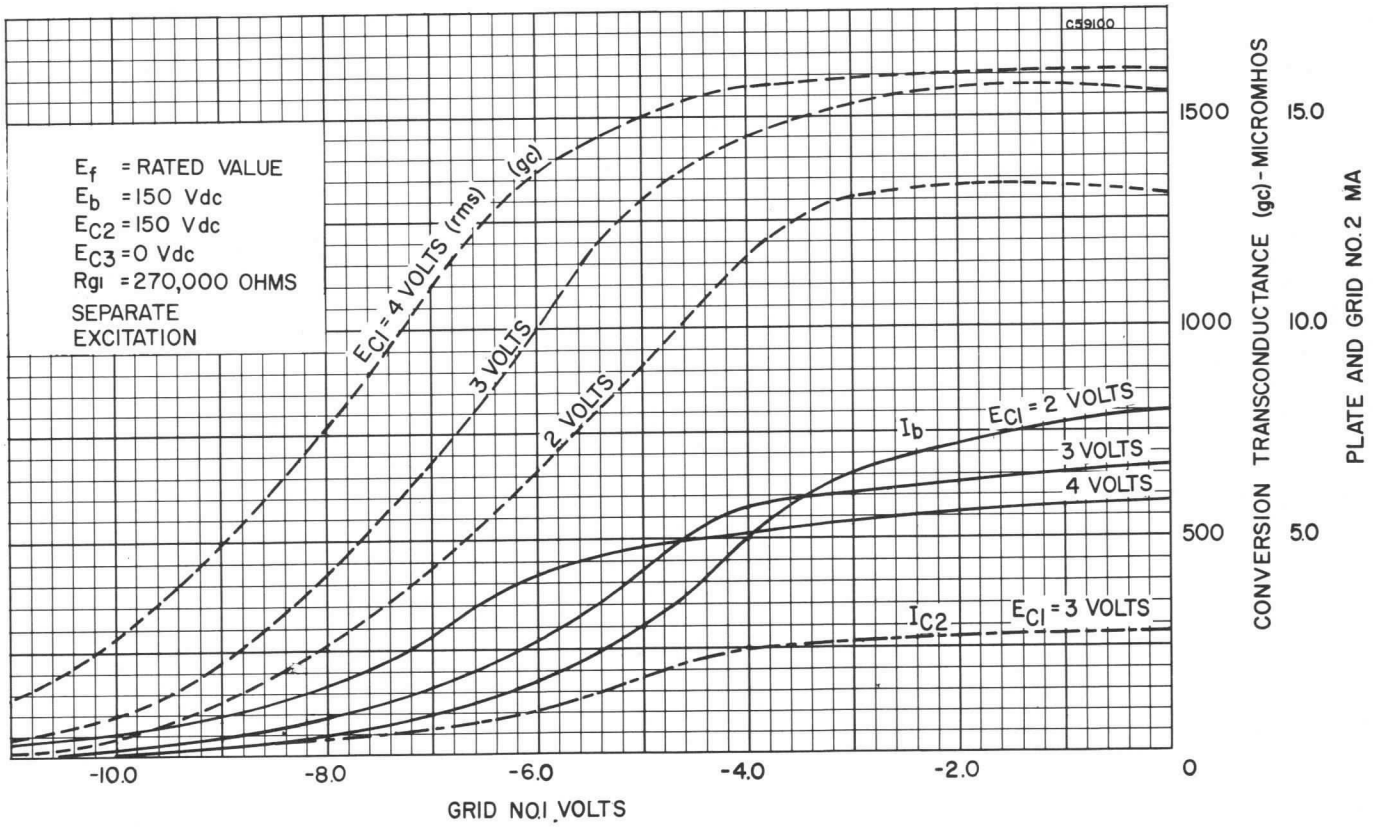

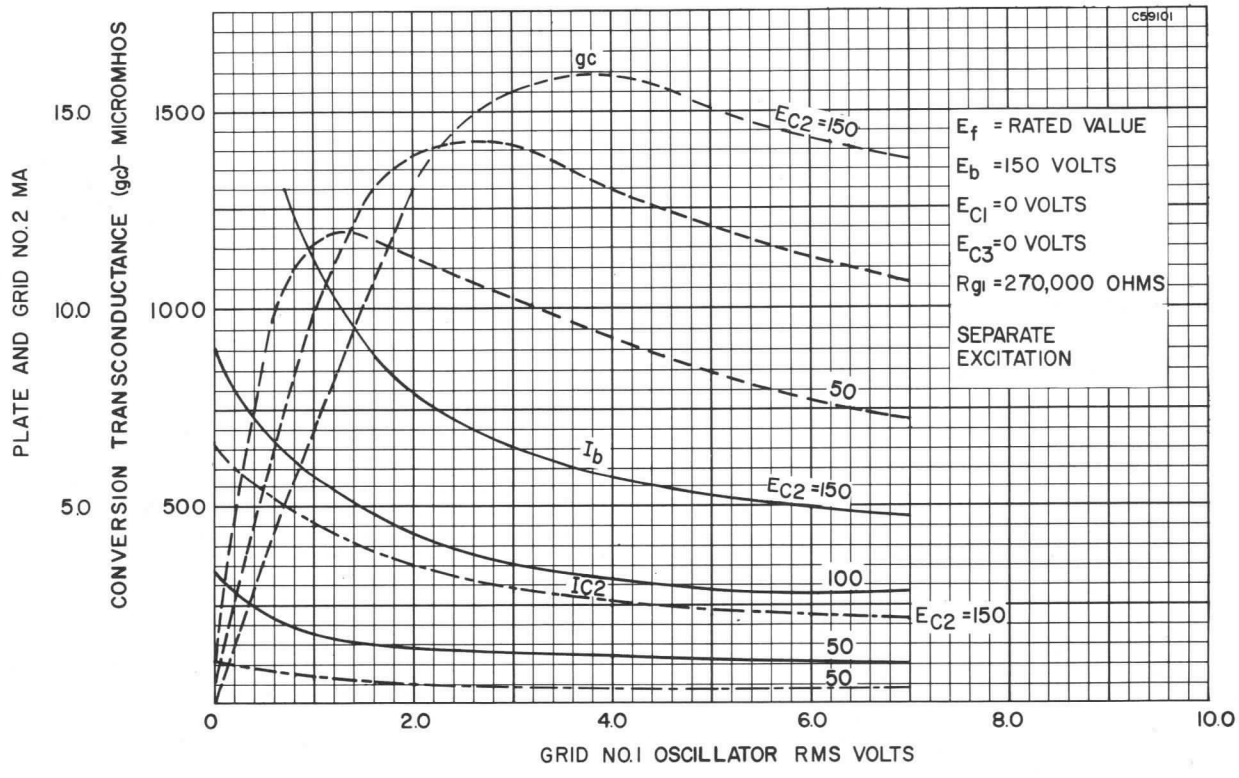

Type 6679/12AT7 is designed specifically for use in mobile communications equipment. The 6679/12AT7 may be operated without serious degradation under normal variations in supply voltage as encountered with automotive electrical systems. Also consistent with the requirements of the equipment, the tube is capable of withstanding appreciable on-off cycling.

MECHANICAL DATA

Bulb	T-6½
Base	E9-1, Small Button 9-Pin
Outline	6-2
Basing	9A
Cathode	Coated Unipotential
Mounting Position	Any

ELECTRICAL DATA

HEATER CHARACTERISTICS

	Series/Parallel	
Heater Voltage[1]	12.6/6.3 Volts	
Heater Current	150/300 Ma	
Heater-Cathode Voltage (Design Maximum Values)		
Heater Positive with Respect to Cathode	100 Volts	Max.
Heater Negative with Respect to Cathode	100 Volts	Max.

DIRECT INTERELECTRODE CAPACITANCES (Unshielded)

	Section 1[2]		Section 2[2]	
Grid to Plate	1.5		1.5 μμf	
Input	2.2		2.2 μμf	
Output	0.5		0.4 μμf	
Grid to Grid		.005	μμf	Max.
Plate to Plate		0.4	μμf	Max.
Heater to Cathode	2.4		2.4 μμf	

Grounded Grid Operation

Plate to Cathode	0.2	0.2 μμf	
Input	4.6	4.6 μμf	
Output	1.8	1.8 μμf	

RATINGS (Design Maximum Values) Each Section

Plate Voltage	330 Volts	Max.
Positive Grid Voltage	0 Volts	Max.
Negative Grid Voltage	55 Volts	Max.
Plate Dissipation	2.8 Watts	Max.

CHARACTERISTICS AND TYPICAL OPERATION

Class A1 Amplifier — Each Section

Plate Voltage	100	250 Volts
Cathode Bias Resistor	270	200 Ohms
Plate Current	3.7	10.0 Ma
Plate Resistance	15,000	10,900 Ohms
Transconductance	4000	5500 μmhos
Amplification Factor	60	60
Ec for Ib = 10 μa (Approx.)	−5	−12 Volts

QUICK REFERENCE DATA

Sylvania Type 6679/12AT7 is designed specifically for mobile operation. It is a T-6½ high mu duo triode intended for use as a grounded grid amplifier or a frequency converter at frequencies below 300 Mc.

Type 6679/12AT7 possesses electrical characteristics essentially equivalent to Type 12AT7.

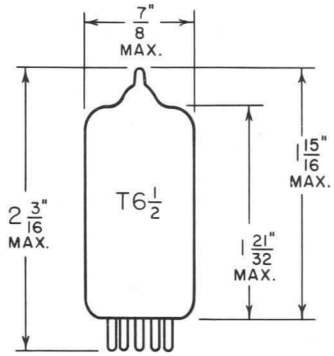

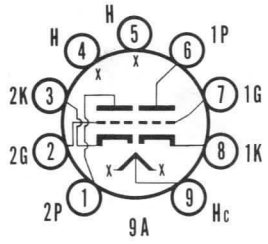

SYLVANIA
ELECTRONIC TUBES
A Division of
Sylvania Electric Products Inc.
RECEIVING TUBE
OPERATIONS
EMPORIUM, PA.

Prepared and Released By The
TECHNICAL PUBLICATIONS SECTION
EMPORIUM, PENNSYLVANIA

MAY, 1961

File Under
RECEIVING TUBES

SPECIAL TESTS AND RATINGS

Heater-Cycling Life Test

Statistical sample operated for 2000 cycles minimum to evaluate and control heater-cathode defects. Conditions of test include Ef = 15 volts (series-heater connection) cycled for one minute on and one minute off. Eb + Ec = 0 volts and Ehk = 135 volts with heater positive with respect to cathode.

Average Transconductance at Reduced Heater Voltage, Each Section . . . . . 4400 μmhos

Ef = 10.0 volts, Eb = 250 volts, Rk = 200 ohms (bypassed).

NOTES:

1. *When operated from automotive electrical systems, the heater may be subjected to voltage variations as great as ±20 percent. Although such extremes in heater voltage may be tolerated for short periods, increased equipment reliability can be achieved with improved supply-voltage regulation.*
2. *Section No. 1 connects to Pins 6, 7 and 8. Section No. 2 connects to Pins 1, 2 and 3.*

AVERAGE PLATE CHARACTERISTICS

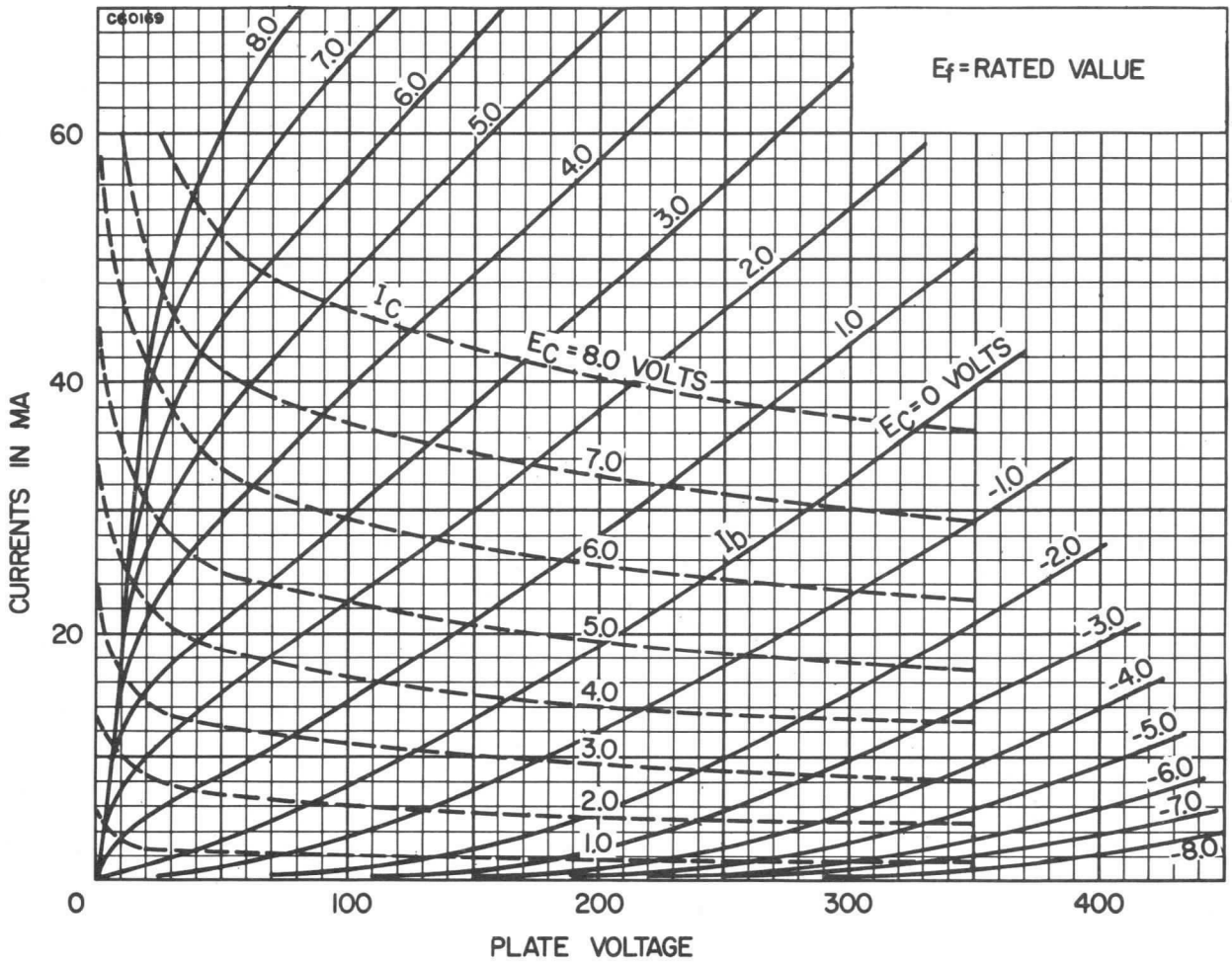

AVERAGE TRANSFER CHARACTERISTICS

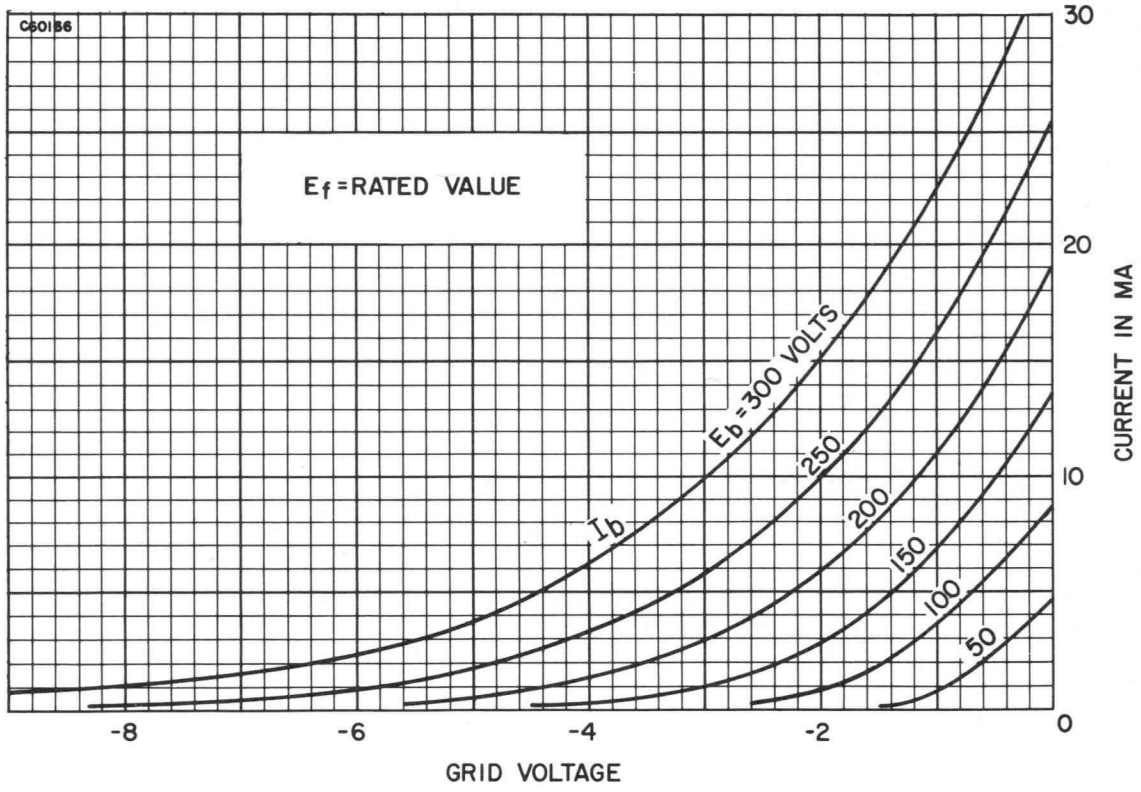

AVERAGE TRANSFER CHARACTERISTICS

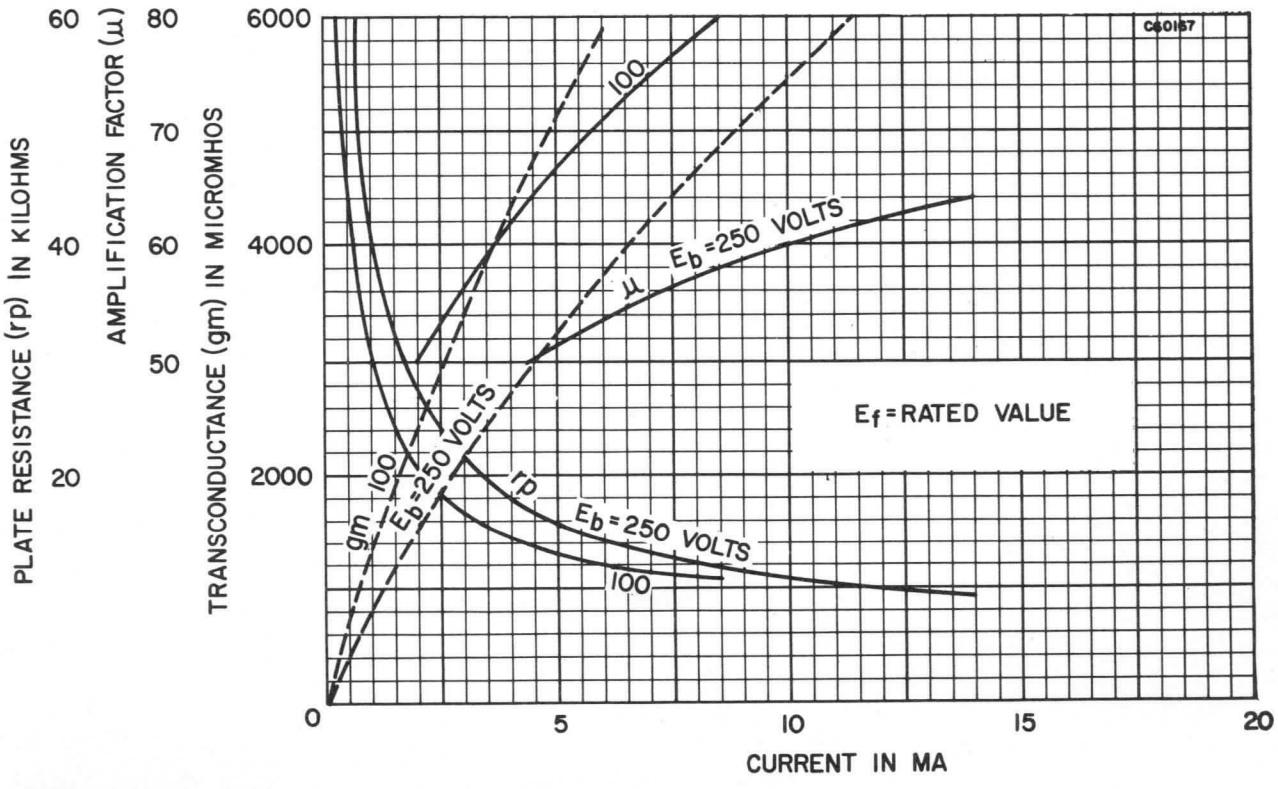

Type 6680/12AU7 is designed specifically for use in mobile communications equipment. The 6680/12AU7 may be operated without serious degradation under normal variations in supply voltage as encountered with automotive electrical systems. Also consistent with the requirements of the equipment, the tube is capable of withstanding appreciable on-off cycling.

MECHANICAL DATA

Bulb	T-6½
Base	E9-1, Miniature Button, 9-Pin
Outline	6-2
Basing	9A
Cathode	Coated Unipotential
Mounting Position	Any

ELECTRICAL DATA

HEATER CHARACTERISTICS

	Series/Parallel	
Heater Voltage[1]	12.6/6.3	Volts
Heater Current	150/300	Ma
Heater-Cathode Voltage (Design Maximum Values)		
Heater Negative with Respect to Cathode		
Total DC and Peak	200 Volts	Max.
Heater Positive with Respect to Cathode		
DC	100 Volts	Max.
Total DC and Peak	200 Volts	Max.

DIRECT INTERELECTRODE CAPACITANCES (Unshielded)

	Section 1[2]	Section 2[2]
Grid to Plate	1.5	1.5 μμf
Input: (g to h+k)	1.6	1.6 μμf
Output: (p to h+k)	0.4	0.32 μμf

RATINGS (Design Maximum Values) Each Section

Class A1 Amplifier

Plate Voltage	330 Volts	Max.
Plate Dissipation	3 Watts	Max.
Grid Circuit Resistance		
Fixed Bias	0.25 Megohm	Max.
Cathode Bias	1.0 Megohm	Max.

CHARACTERISTICS AND TYPICAL OPERATION

Class A1 Amplifier (Each Section)

Plate Voltage	100	250 Volts
Grid Voltage	0	−8.5 Volts
Plate Current	11.8	10.5 Ma
Transconductance	3100	2200 μmhos
Amplification Factor	20	17
Plate Resistance (Approx.)	6500	7700 Ohms
Grid Voltage for Ib = 10 μa (Approx.)		−24 Volts

SPECIAL TESTS AND RATINGS

Heater-Cycling Life Test

Statistical sample operated for 2000 cycles minimum to evaluate and control heater-cathode defects. Condition of test include Ef = 15.0 volts (series heater connection) cycle for one minute on and one minute off, Eb + Ec = 0 volts and Ehk = 135 volts with heater positive with respect to cathode.

Average Transconductance at Reduced Heater Voltage,
Each Section . . . . . 1750 μmhos
Ef = 10.0 volts, Eb = 250 volts and Ec = −8.5 volts

QUICK REFERENCE DATA

Sylvania Type 6680/12AU7 is designed specifically for mobile operation. It is a T-6½ medium mu triode intended for use as a general purpose amplifier, phase inverter or oscillator.

Type 6680/12AU7 possesses electrical characteristics essentially equivalent to Type 12AU7.

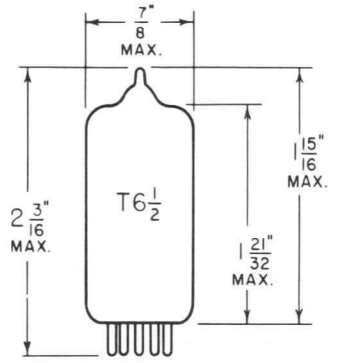

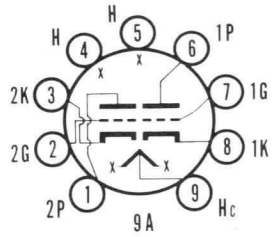

SYLVANIA
ELECTRONIC TUBES
A Division of
Sylvania Electric Products Inc.
RECEIVING TUBE
OPERATIONS
EMPORIUM, PA.

Prepared and Released By The
TECHNICAL PUBLICATIONS SECTION
EMPORIUM, PENNSYLVANIA

AUGUST, 1960

File Under
RECEIVING TUBES

NOTES:

1. *When operated from automotive electrical systems the heater may be subjected to voltage variations as great as ± 20 percent. Although such extremes in heater voltage may be tolerated for short periods, increased equipment reliability can be achieved with improved supply-voltage regulation.*
2. *Section No. 1 connects to Pins 6, 7 and 8. Section No. 2 connects to Pins No. 1, 2 and 3.*

AVERAGE TRANSFER CHARACTERISTICS

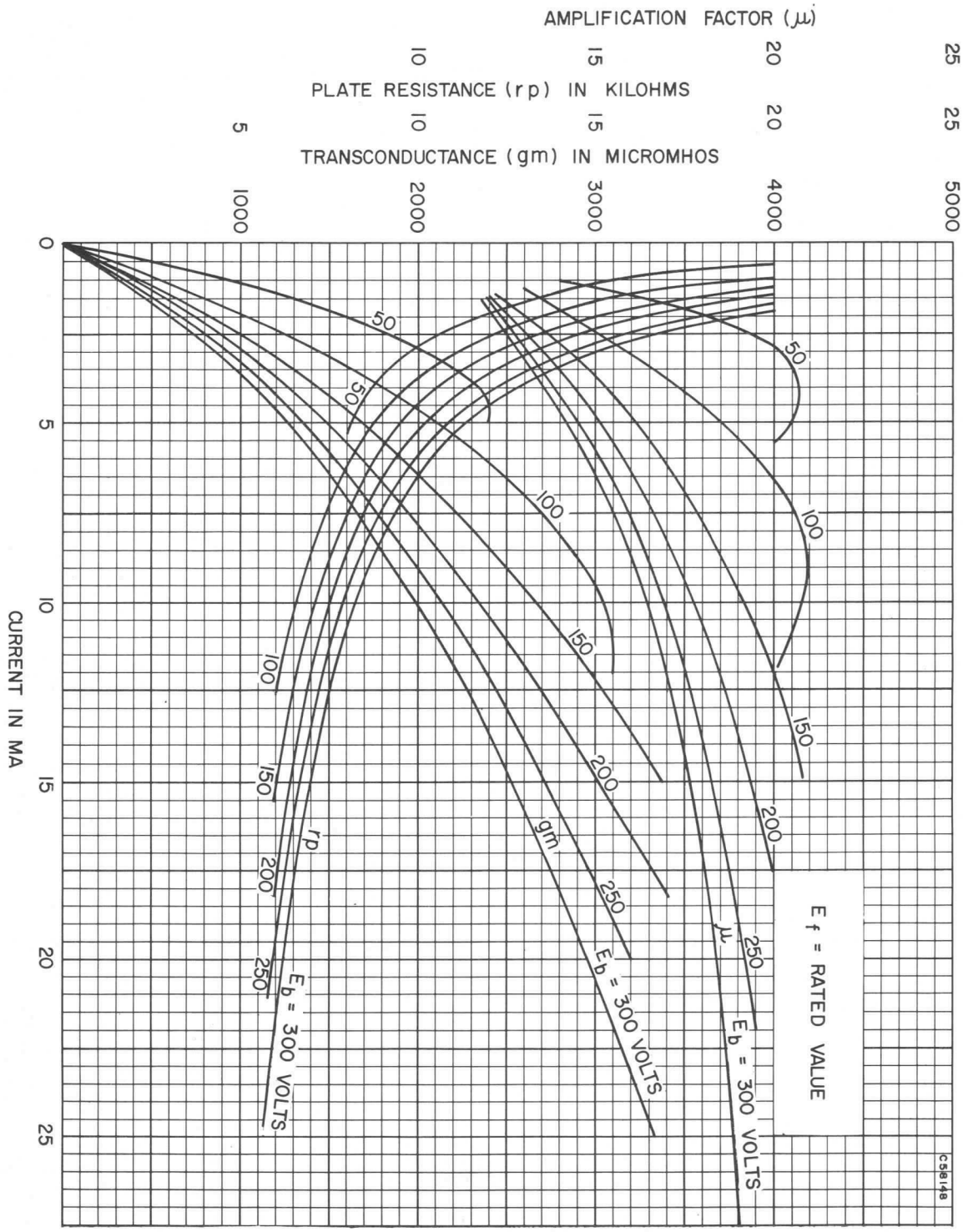

AVERAGE PLATE CHARACTERISTICS

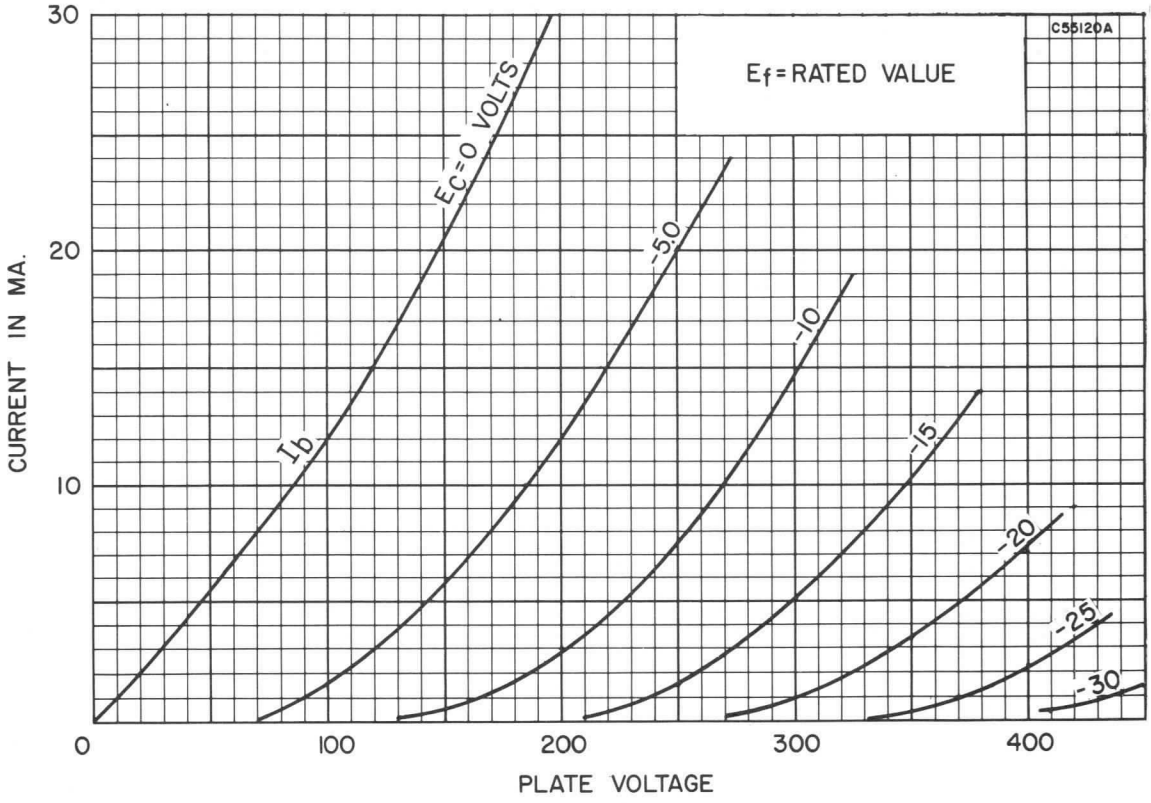

AVERAGE TRANSFER CHARACTERISTICS

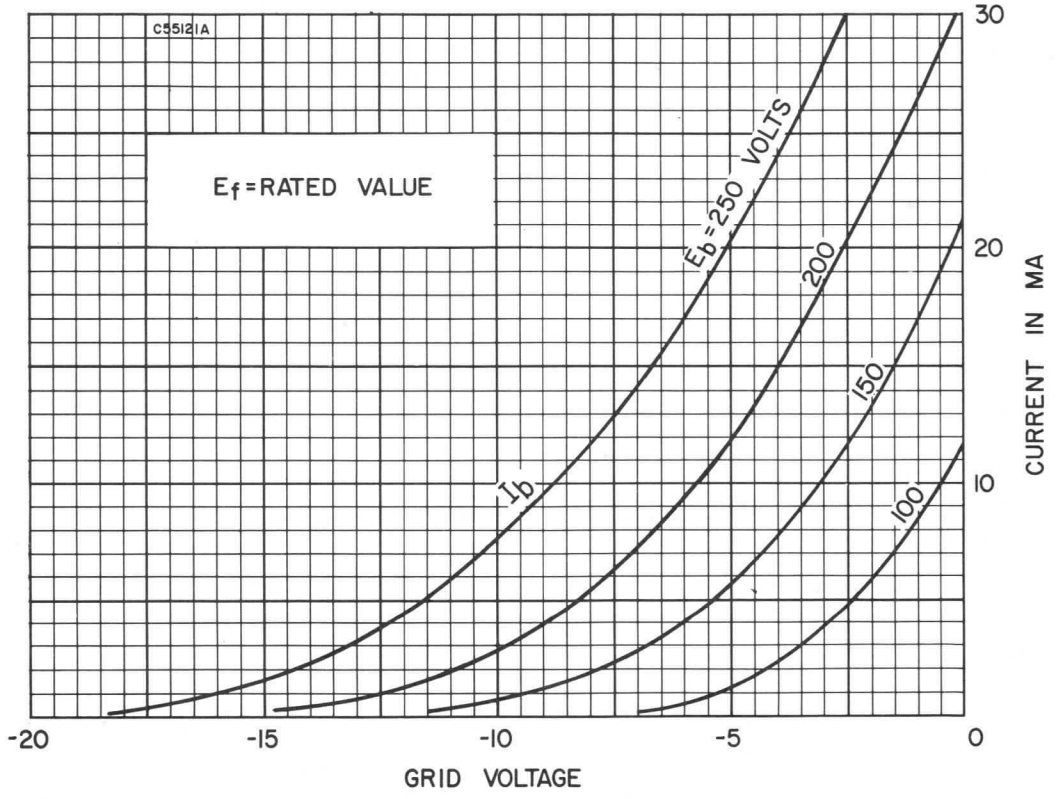

Type 6681/12AX7 is designed specifically for use in mobile communications equipment. The 6681/12AX7 may be operated without serious degradation under normal variations in supply voltage as encountered with automotive electrical systems. Also consistent with the requirements of the equipment the tube is capable of withstanding appreciable on-off cycling.

MECHANICAL DATA

Bulb	T-6½
Base	E9-1, Small Button 9-Pin
Outline	6-2
Basing	9A
Cathode	Coated Unipotential
Mounting Position	Any

ELECTRICAL DATA

HEATER CHARACTERISTICS

	Series/Parallel		
Heater Voltage[1]	12.6/6.3	Volts	
Heater Current	150/300	Ma	
Heater-Cathode Voltage (Design Maximum Values)			
Heater Negative with Respect to Cathode			
Total DC and Peak	200	Volts	Max.
Heater Positive with Respect to Cathode			
DC	100	Volts	Max.
Total DC and Peak	200	Volts	Max.

DIRECT INTERELECTRODE CAPACITANCES (Unshielded)

	Section 1[2]	Section 2[2]	
Grid to Plate	1.7	1.7	μμf
Input (g to h+k)	1.6	1.6	μμf
Output (p to h+k)	0.46	0.34	μμf

RATINGS (Design Maximum Values) Each Section

Plate Voltage	330	Volts	Max.
Plate Dissipation	1.1	Watt	Max.
Positive Grid Voltage	0	Volts	Max.
Negative Grid Voltage	55	Volts	Max.

CHARACTERISTICS AND TYPICAL OPERATION

Class A1 Amplifier — Each Section

Plate Voltage	100	250	Volts
Grid Voltage	−1	−2	Volts
Plate Current	0.5	1.2	Ma
Plate Resistance	80,000	62,500	Ohms
Transconductance	1250	1600	μmhos
Amplification Factor	100	100	

SPECIAL TESTS AND RATINGS

Heater-Cycling Life Test

Statistical sample operated for 2000 cycles minimum to evaluate and control heater-cathode defects. Conditions of test include Ef = 15.0 volts (series-heater connection) cycled for one minute on and one minute off, Eb + Ec = 0 volts and Ehk = 135 volts with heater positive with respect to cathode.

NOTES:

1. *When operated from automotive electrical systems the heater may be subjected to voltage variations as great as ± 20 percent. Although such extremes in heater voltage may be tolerated for short periods, increased equipment reliability can be achieved with improved supply-voltage regulation.*
2. *Section No. 1 connects to Pins 6, 7 and 8. Section No. 2 connects to Pins 1, 2 and 3.*

QUICK REFERENCE DATA

Sylvania Type 6681/12AX7 is designed specifically for mobile operation. It is a T-6½ high mu duo triode intended primarily for use as an audio amplifier or phase inverter.

Type 6681/12AX7 possesses electrical characteristics essentially equivalent to Type 12AX7.

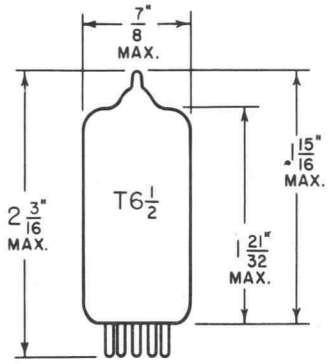

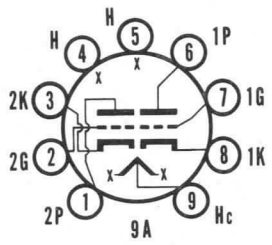

SYLVANIA
ELECTRONIC TUBES
A Division of
Sylvania Electric Products Inc.
RECEIVING TUBE
OPERATIONS
EMPORIUM, PA.

Prepared and Released By The
TECHNICAL PUBLICATIONS SECTION
EMPORIUM, PENNSYLVANIA

AUGUST, 1960

File Under
RECEIVING TUBES

AVERAGE PLATE CHARACTERISTICS

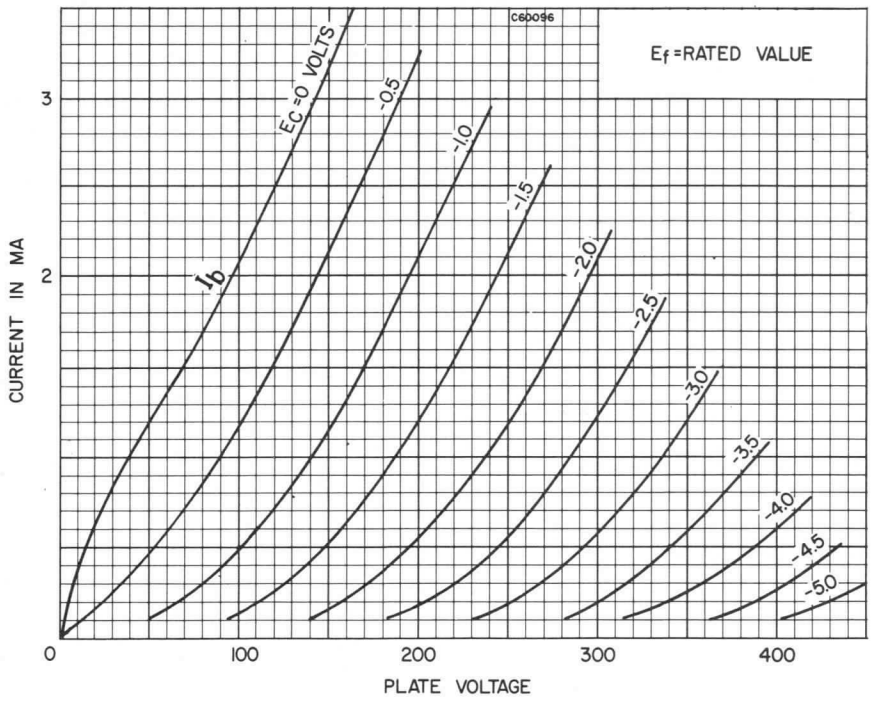

AVERAGE TRANSFER CHARACTERISTICS

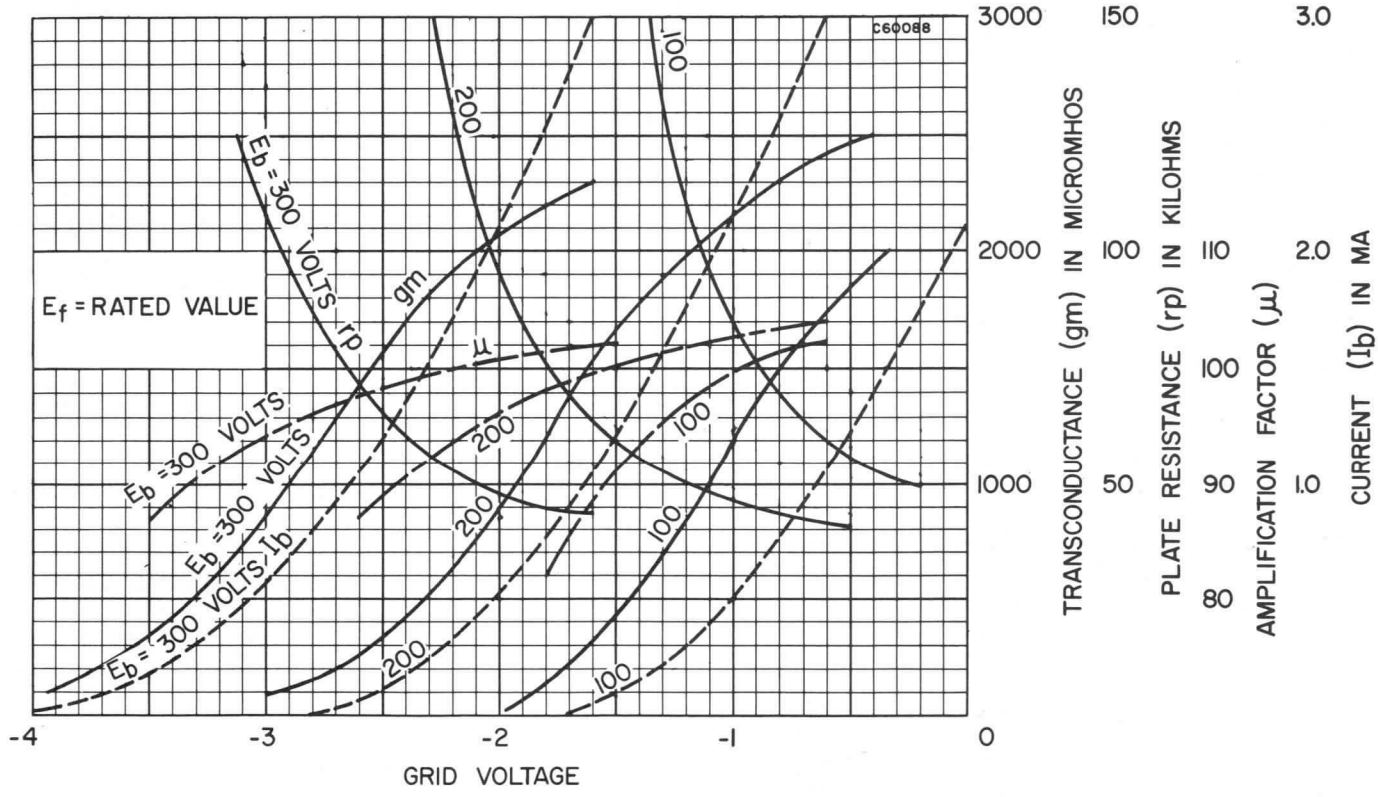

MECHANICAL DATA

Bulb	T-1
Base	Subminiature Button Flexible Leads
Outline	See Diagram
Basing	See Diagram
Cathode	Coated Filament
Mounting Position	Note 1

ELECTRICAL DATA

FILAMENT CHARACTERISTICS

Filament Voltage AC or DC	1.0 ± 5 % V
Filament Current	30 Ma

RATINGS (Absolute Maximum)

Plate Voltage	65 Vdc
Plate Current	750 μA
Grid Resistance	1.0 Megohm

CHARACTERISTICS AND TYPICAL OPERATION

Filament Voltage[2] AC	1.0 Volt
DC Plate Voltage	50 Volts
Grid Resistance	100,000 Ohms
Grid Supply Voltage (Max. Light Output)	0 Volt
Plate Current (Max. Light Output)	585 μA
Grid Supply Voltage (Zero Light Output)	−3 Volts
Plate Current (Zero Light Output)	5 μA

NOTES:

1. *Type 6977 tubes are designed to be soldered-in and mounted flat and parallel to each other on printed circuit boards such that the light output sides of the tubes face the front.*
2. *Center tap of filament transformer grounded.*
3. *The 6977 is well suited for use in transistorized circuits where its high input impedance and small signal requirements do not load the transistor circuit. The 6977 is optimized for side view mounting and will produce a bright blue-green light area approximately 0.4 x .187 inches.*

QUICK REFERENCE DATA

The Sylvania Type 6977 is a filamentary, high vacuum, subminiature indicator triode with a fluorescent anode, capable of operating from DC plate and grid supplies. It is designed for applications in electronic computers and business machines where it can replace neon lamps.[3]

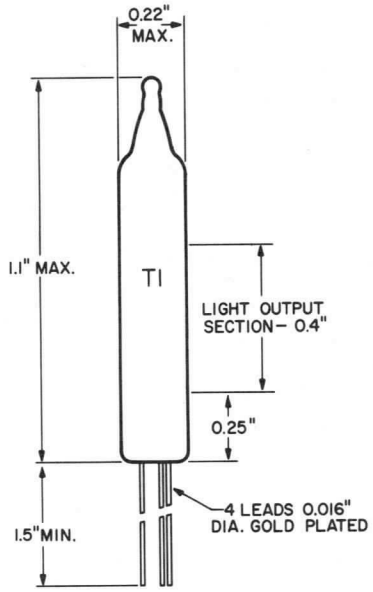

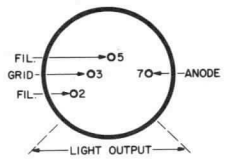

SYLVANIA
ELECTRONIC TUBES
A Division of
Sylvania Electric Products Inc.
RECEIVING TUBE
OPERATIONS
EMPORIUM, PA.
Prepared and Released By The
TECHNICAL PUBLICATIONS SECTION
EMPORIUM, PENNSYLVANIA
OCTOBER, 1963

File Under
RECEIVING TUBES

AVERAGE ANODE CHARACTERISTICS

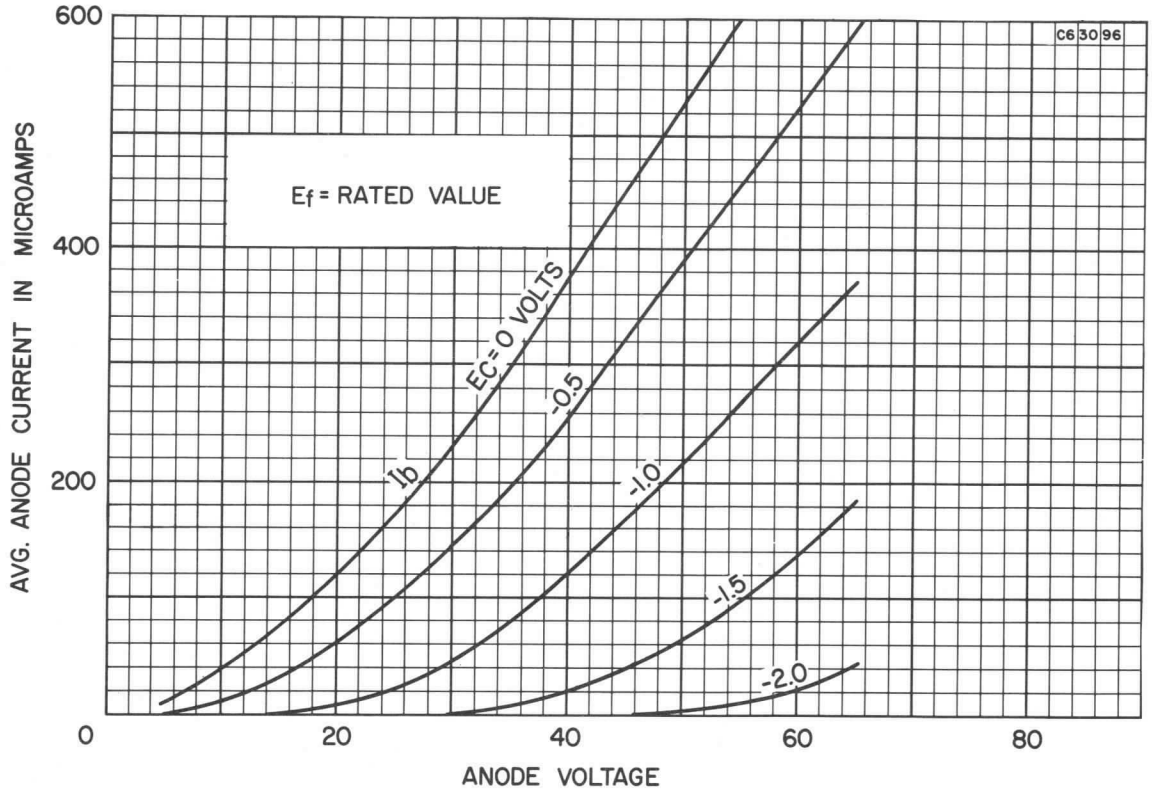

SYLVANIA

engineering data service

SYLVANIA
7025

MECHANICAL DATA

Bulb	T-6½
Base	E9-1, Miniature Button 9-Pin
Outline	6-2
Basing	9A
Cathode	Coated Unipotential
Mounting Position	Any

ELECTRICAL DATA

HEATER CHARACTERISTICS

Heater Voltage Series/Parallel	12.6/6.3 Volts	
Heater Current Series/Parallel	150/300 Ma	
Heater-Cathode Voltage (Design Center Values)		
Heater Negative with Respect to Cathode		
Total DC and Peak	200 Volts	Max.
Heater Positive with Respect to Cathode		
DC	100 Volts	Max.
Total DC and Peak	200 Volts	Max.

DIRECT INTERELECTRODE CAPACITANCES

	Section 1[1]		Section 2[1]		
	Shielded[2]	Unshielded	Shielded[2]	Unshielded	
Grid to Plate	1.7	1.7	1.7	1.7	μμf
Input g to (h+k)	1.8	1.6	1.8	1.6	μμf
Output p to (h+k)	1.9	0.46	1.9	0.34	μμf

RATINGS (Design Center Values) Each Section

Plate Voltage	300 Volts	Max.
Plate Dissipation	1.0 Watt	Max.
Positive Grid Voltage	0 Volts	Max.
Negative Grid Voltage	−50 Volts	Max.

CHARACTERISTICS AND TYPICAL OPERATION

Class A_1 Amplifier — Each Section			
Plate Voltage	100	250	Volts
Grid Voltage	−1	−2	Volts
Plate Current	0.5	1.2	Ma
Transconductance	1250	1600	μmhos
Amplification Factor	100	100	
Plate Resistance	80,000	62,500	Ohms

EQUIVALENT NOISE AND HUM VOLTAGE

(Referenced to Grid — Each Unit)		
Average Value[3] (RMS)	1.8	μVolts
Maximum Value[4] (RMS)	7	μVolts

QUICK REFERENCE DATA

The Sylvania Type 7025 is a miniature high-mu twin triode having separate cathodes. It is designed for service as an audio voltage amplifier or phase inverter. The center tapped heater permits operation on 12.6 or 6.3 volts. The Type 7025 is identical to the 12AX7 except for improved noise and hum characteristics.

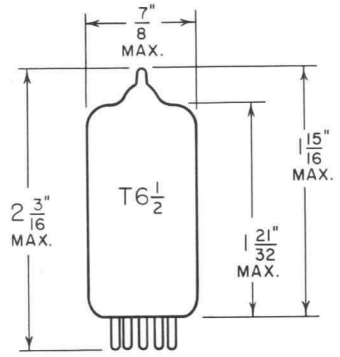

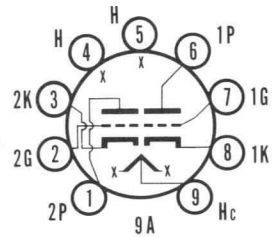

SYLVANIA ELECTRONIC TUBES
A Division of
SYLVANIA ELECTRIC PRODUCTS, Inc.
RECEIVING TUBE
OPERATIONS
EMPORIUM, PENNSYLVANIA

Prepared and Released By The
TECHNICAL PUBLICATIONS SECTION
EMPORIUM, PENNSYLVANIA

DECEMBER 1958

NOTES:

1. *Section No. 1 connects to Pins 6, 7, and 8.*
   Section No. 2 connects to Pins 1, 2, and 3.
2. *External shield No. 315 connected to cathode of section under test.*
3. *Measured under the following conditions: Ef = 6.3 Vac, parallel connection; center-tap of heater transformer grounded; Ef = 250 Vdc; Rg = 0.1 Megohm; Rk = 2700 Ohms; Ck = 100 μf; Rg = O; F = 25 to 10,000 cps.*
4. *Measured under same conditions as "Average Value" except that Rk is unbypassed and Rg = 50,000 Ohms.*

AVERAGE PLATE CHARACTERISTICS

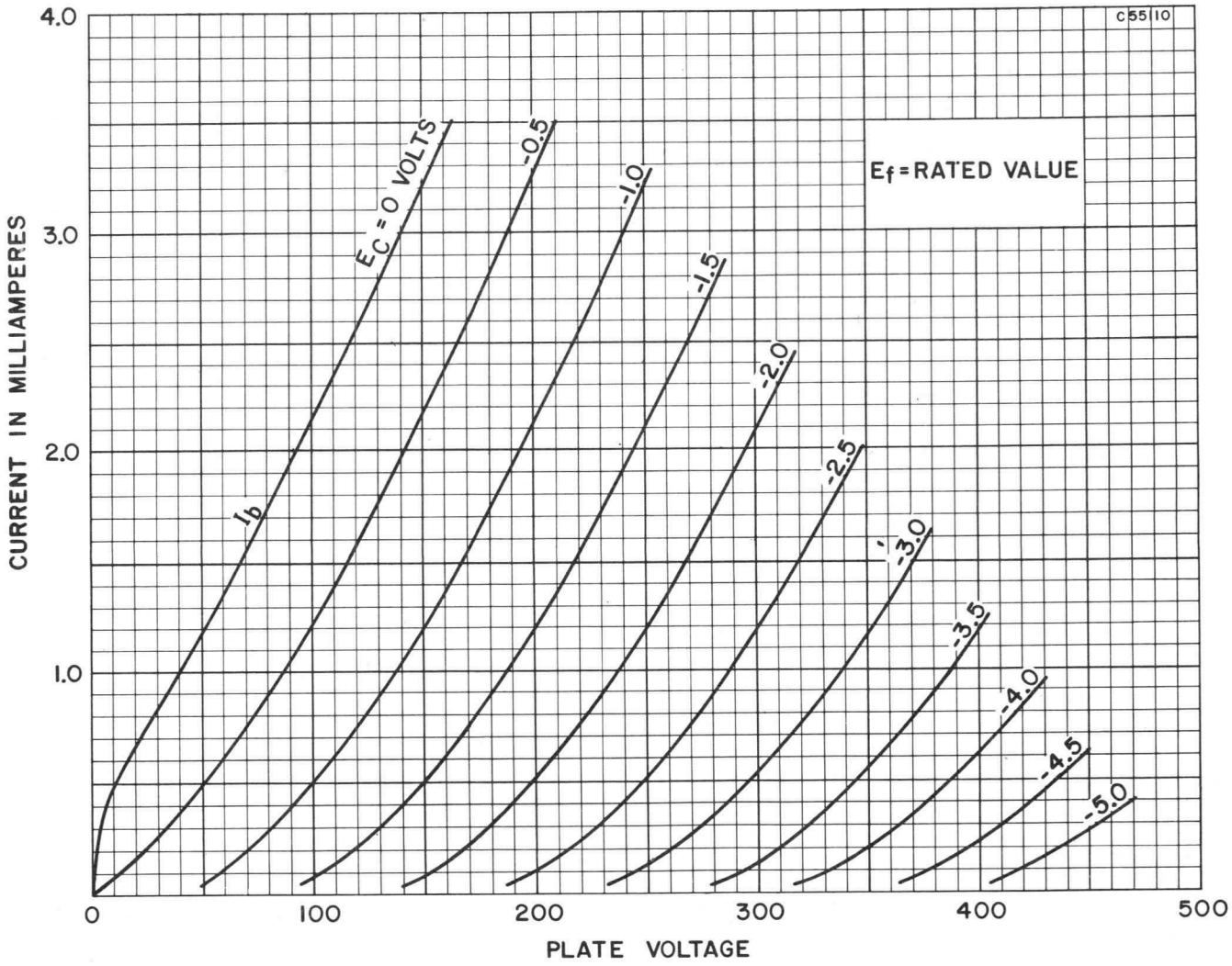

AVERAGE TRANSFER CHARACTERISTICS

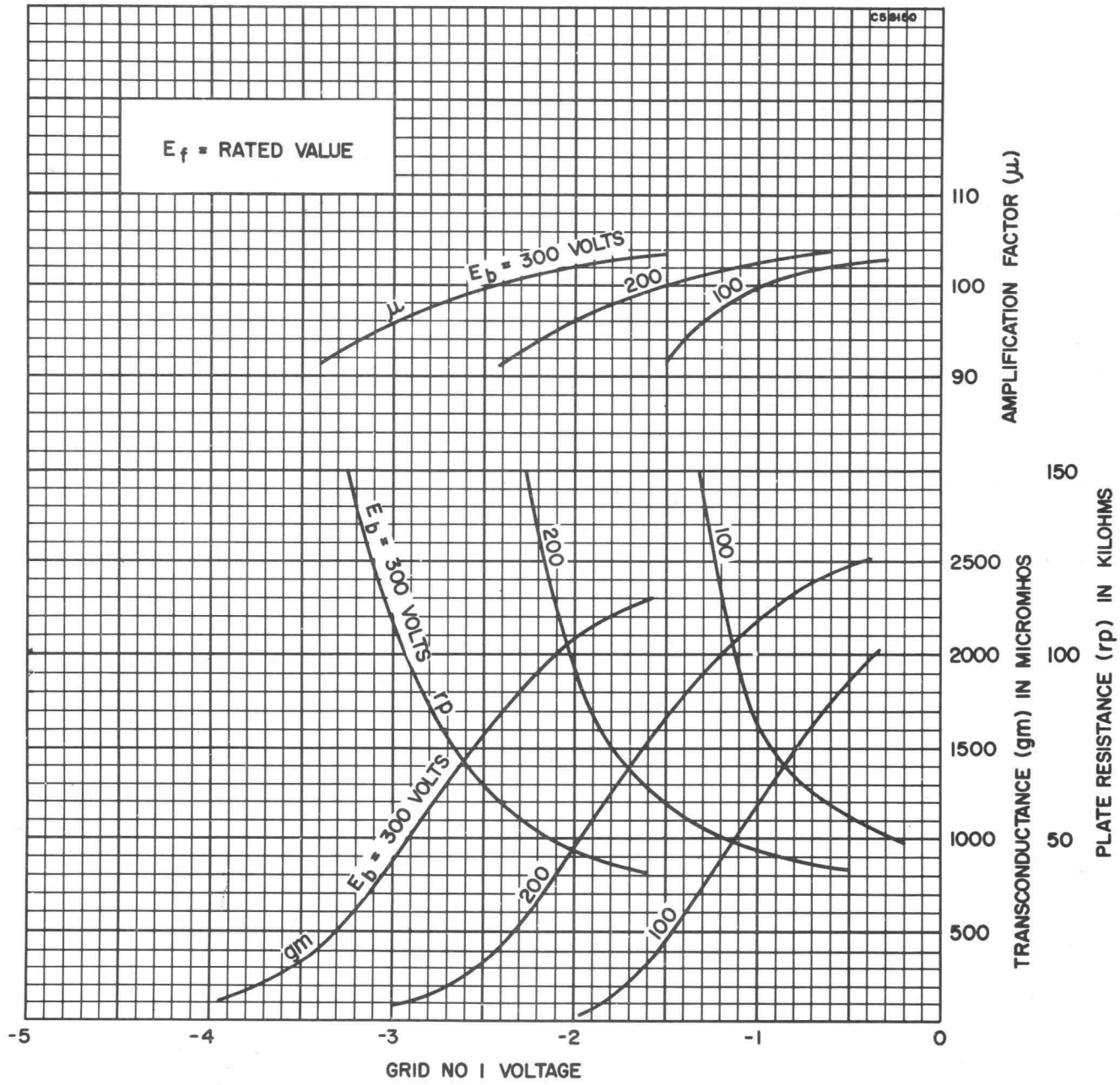

MECHANICAL DATA

Bulb	T-6½
Base	E9-1, Small Button 9-Pin
Outline	6-3
Basing	9H
Cathode	Coated Unipotential
Mounting Position	
Preferred	Upright or with Plate Majors in a Vertical Position
Permissible	Any

ELECTRICAL DATA

DIRECT INTERELECTRODE CAPACITANCES (Unshielded)

	Section 1		Section 2
Grid to Plate	6.0		6.0 μμf
Input: g to (h+k)	4.8		4.8 μμf
Output: p to (h+k)	0.65		0.55 μμf
Heater to Cathode	6.0		6.0 μμf
Grid No. 1 to Grid No. 2		0.10	μμf
Plate No. 1 to Plate No. 2		1.4	μμf

HEATER CHARACTERISTICS

	Series	Parallel
Heater Voltage	12.6 ± 5%	6.3 ± 5% Volts
Heater Current	450	900 Ma
Heater Power	5.7	5.7 Watts
Maximum Heater-Cathode Voltage		
Heater Negative with Respect to Cathode		
Total DC and Peak		200 Volts
Heater Positive with Respect to Cathode[1]		
DC		100 Volts
Total DC and Peak		200 Volts

RATINGS (Absolute Maximum Values—Each Section)[2]

Average Plate Voltage[3]	300 Volts	Max.
Peak Plate Voltage (Measured Between Plate and Cathode)[4]	600 Volts	Max.
Grid Voltage		
Negative Bias Value DC	100 Volts	Max.
Positive Bias Value DC	1.0 Volt	Max.
Peak Negative Value[4]	300 Volts	Max.
Peak Positive Value[4]	30 Volts	Max.
Average Positive Grid Current[3]	5.0 Ma	Max.
Peak Positive Grid Current[4]	200 Ma	Max.
Average Plate Dissipation[3]	4.5 Watts	Max.
Average Total Plate Dissipation (Both Sections)[3]	8.0 Watts	Max.
Average Cathode Current[3]	50 Ma	Max.
Peak Cathode Current[4]	400 Ma	Max.
Grid Circuit Resistance		
Fixed Bias	0.1 Megohm	Max.
Cathode Bias	0.47 Megohm	Max.
Bulb Temperature (At hottest point on bulb)	160° C	Max.

QUICK REFERENCE DATA

The Sylvania Type 7044 is a high-perveance, medium-mu, double triode designed primarily for computer applications. The tube is characterized by high zero-bias plate current and exceptional freedom from the development of cathode interface.

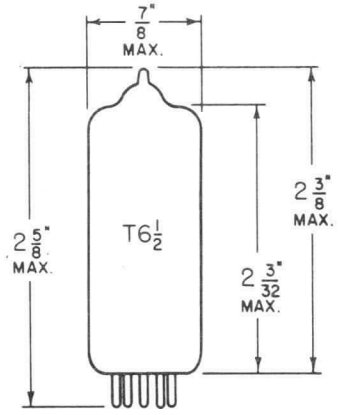

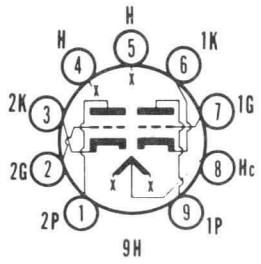

SYLVANIA ELECTRIC PRODUCTS INC.

RADIO TUBE DIVISION

EMPORIUM, PA.

Prepared and Released By The TECHNICAL PUBLICATIONS SECTION EMPORIUM, PENNSYLVANIA

NOVEMBER, 1957

INITIAL CHARACTERISTICS (Each Section)[5]

Plate Voltage	120 Volts
Grid Voltage	−2 Volts
Plate Current	36 Ma
Transconductance	10,000 μmhos
Amplification Factor	19
Plate Resistance	1900 Ohms
Grid Voltage for Ib = 200 μa (approx.) at Eb = 150V	−12 Volts
Plate Current (Instantaneous Value) at Eb = 90 Vdc; Ec adjusted for Ic = +250 μa	50 Ma

INITIAL CHARACTERISTICS LIMITS (Range Values for Equipment Design)[5]

	Min.	Max.
Heater Current Ef = 12.6 Volts	410	490 Ma
Plate Current Ef = 12.6 Volts; Eb = 90 Volts; Ec Adjusted for Ic = 250 μa	41	62 Ma
Plate Current Ef = 12.6 Volts; Eb = 120 Volts; Ec = −2 Volts	26	45 Ma
Cutoff Plate Current Ef = 12.6 Volts; Eb = 150 Volts; Ec = −14 Volts	—	200 μa
Reverse Grid Current Ef = 12.6 Volts; Eb = 120 Volts; Ec = −2 Volts	—	1.5 μa
Heater-Cathode Leakage Ef = 12.6 Volts and Ehk = ± 100 Volts	—	30 μa
Minimum Interelectrode Resistance (Except Heater-Cathode)		
Grid to All: Measured with 300 Volts, Grid Negative	50	— Megohms
Plate to All: Measured with 500 Volts, Plate Negative	50	— Megohms
Intermittent Leakage[6]		

TIME DEPENDENT CHARACTERISTIC LIMITS[5]

	Min.	Max.
Cathode Interface Ef = 12.6 Volts; Eb = 85 Volts; Ec Adjusted for Ib = 2.0 Ma	—	25 Ohms
Number of Heater Cycles[7]	2000	— Cycles

NOTES:

1. *Heater positive not recommended for reliable operation.*
2. *Pulse terms in accordance with IRE Standards on Pulses: Definitions of Terms, Parts I and II, 1951, 1952.*
3. *Averaging time 1 millisecond unless otherwise specified.*
4. *A rectangular pulse is used of 10 μsec width, 1% duty factor (±0.1%) and 1 kc repetition rate. The rise time shall be less than 1 μsec and the fall time shall be less than 2 μsec. Overshoot shall be less than 5% and droop shall be less than 10%.*
5. *Elements of the section not under test shall be grounded.*
6. *Intermittent leakage shall be measured with equipment capable of detecting resistances as follows:*
   less than 1,000 ohms for 2 microseconds.
   less than 100,000 ohms for 15 microseconds.
   less than 2.5 megohms for 1 millisecond.
   The acceleration applied to the tube should be an approximate half sinusoid of 50 to 100 G for a base duration of approximately 500 Microseconds.
7. *One cycle consists of operating the heater on for one minute, with Ef = 15.0 Volts, and off for four minutes. Ehk = 140 Vac, is applied continuously. The no load to steady state full load regulation of the heater voltage supply shall be no more than 3.0 percent.*

AVERAGE PLATE CHARACTERISTICS

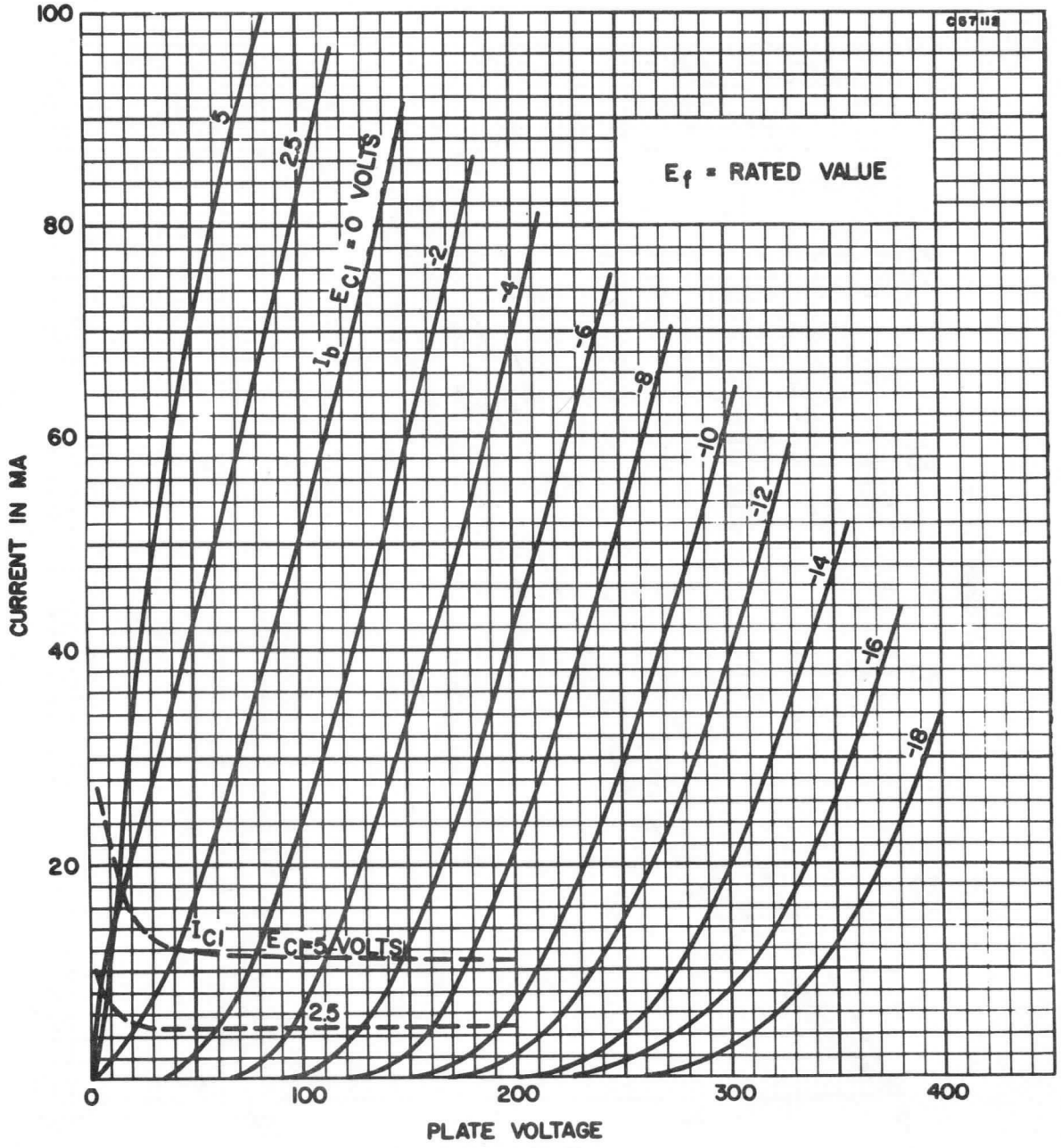

AVERAGE PLATE CHARACTERISTICS

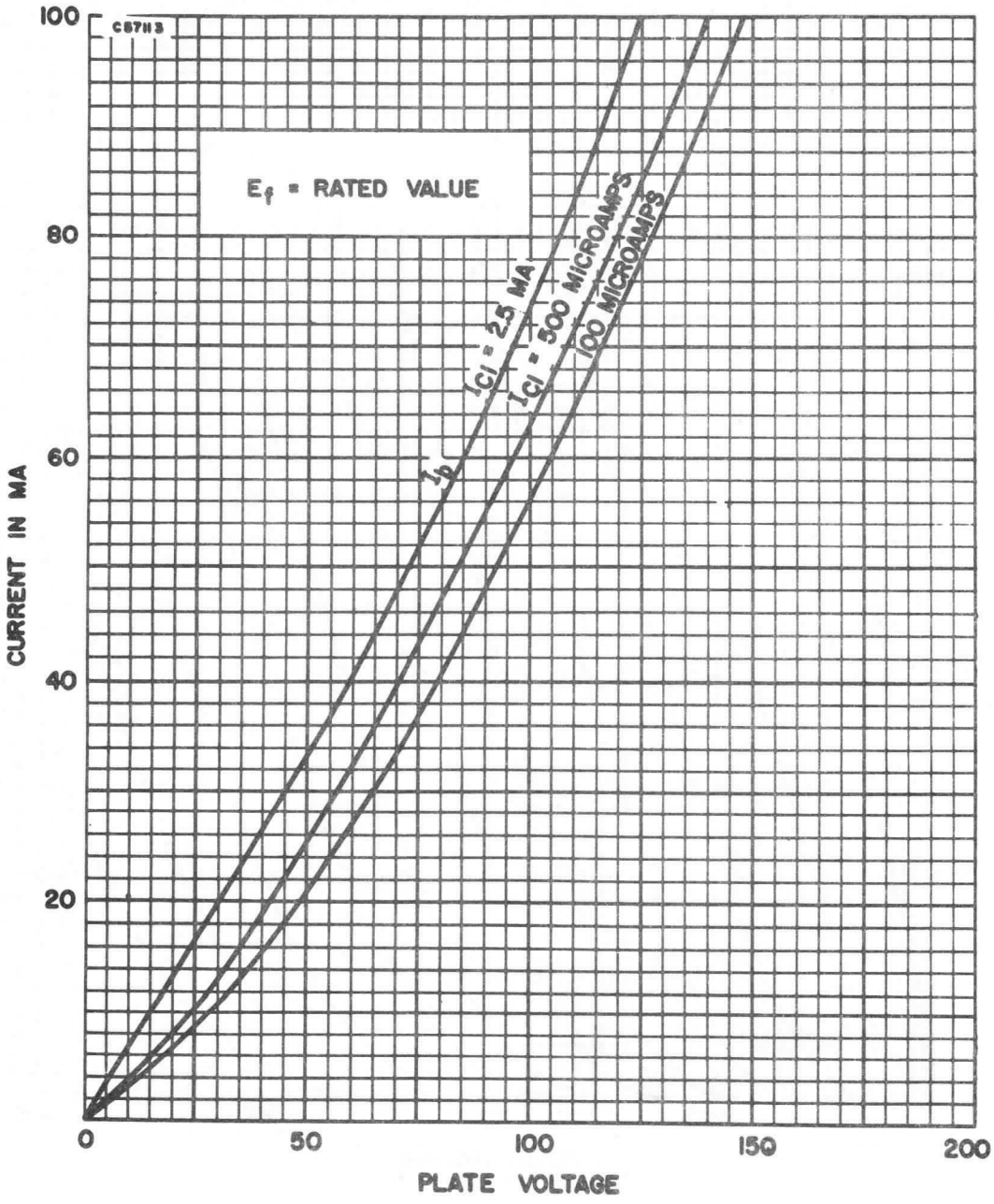

AVERAGE TRANSFER CHARACTERISTICS

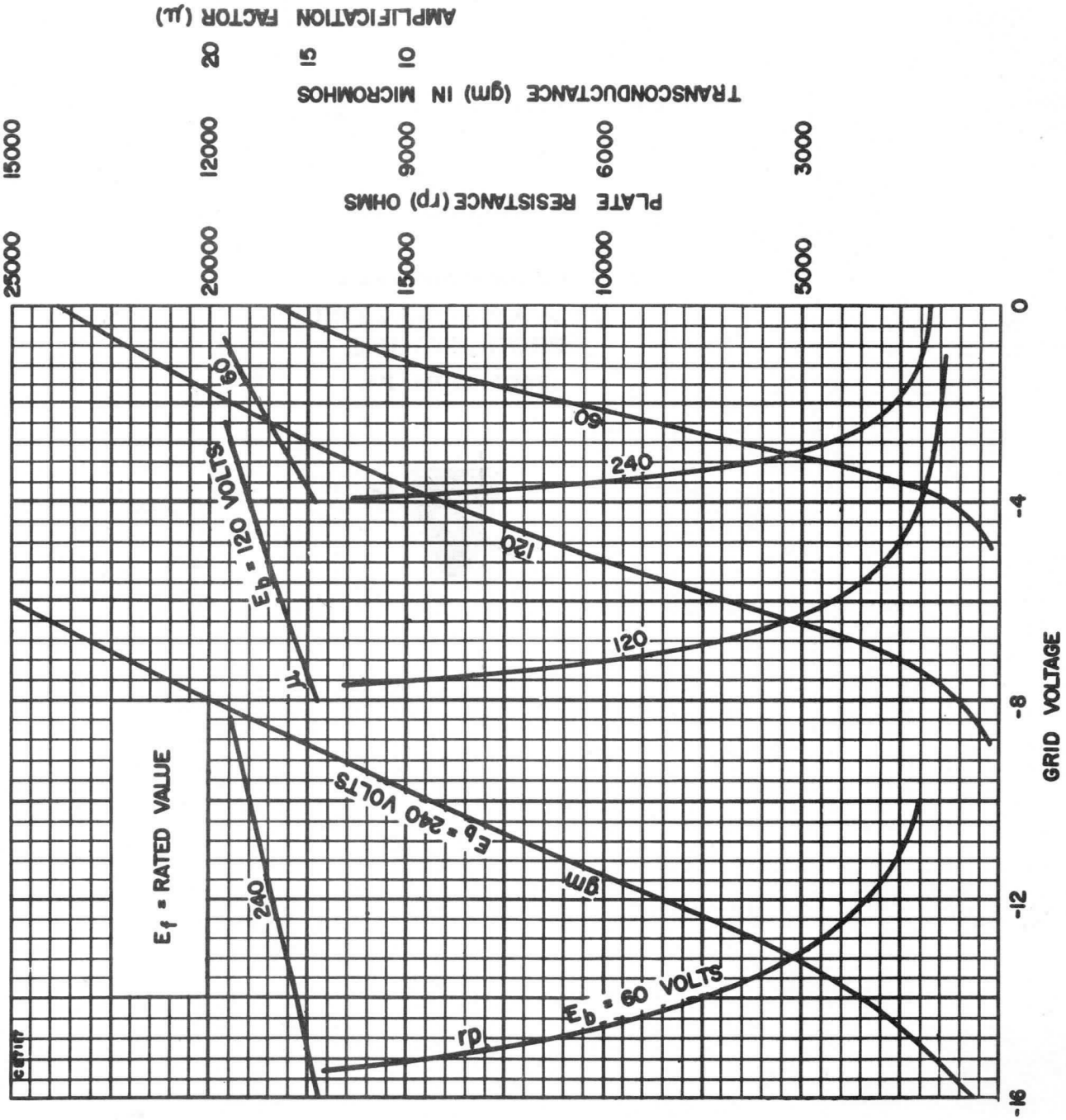

A Technical Publication of

SYLVANIA ELECTRIC
PRODUCTS INC.

EMPORIUM, PA.

MECHANICAL DATA

Bulb	T-5½
Base	E7-1, Miniature Button 7-Pin
Outline	5-1
Basing	6BT
Cathode	Coated Unipotential
Mounting Position	Any

ELECTRICAL DATA

HEATER CHARACTERISTICS

Heater Voltage Range	12-15	Volts
Heater Current at Ef = 13.5 volts	155	Ma
Heater-Cathode Voltage (Absolute Maximum Values)		
Heater Negative with Respect to Cathode	120	Volts Max.
Heater Positive with Respect to Cathode	120	Volts Max.

DIRECT INTERELECTRODE CAPACITANCES (Shielded)[1]

Plate Input (Each Section)	3.2	μμf
Plate to Plate	.026	μμf
Cathode Input (Each Section)	3.6	μμf

RATINGS (Absolute Maximum Values)

Peak Inverse Plate Voltage	350	Volts Max.
AC Plate Supply Voltage Per Plate, RMS	117	Volts Max.
Peak Plate Current Per Plate	60	Ma Max.
DC Output Current Per Plate	10.0	Ma Max.

CHARACTERISTICS

Voltage Drop at I_b = 60 Ma Per Plate	10	Volts

TYPICAL OPERATION

AC Plate Voltage Per Plate	117	Volts
Effective Plate Supply Impedance Per Plate	300	Ohms Min.
DC Output Current Per Plate	9.0	Ma

QUICK REFERENCE DATA

The Sylvania Type 7055 is a miniature, high perveance twin diode, intended for use in mobile communications equipment. Featuring a 13.5 volt heater, the 7055 is designed for dependable operation over the wide range of heater voltage encountered in this service.

Except for heater characteristics, the Type 7055 is similar to the 6AL5.

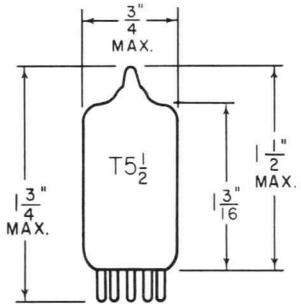

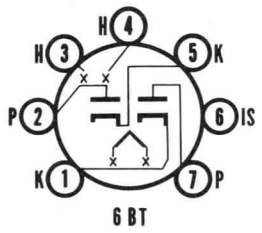

6 BT

SYLVANIA
ELECTRONIC TUBES
A Division of
Sylvania Electric Products Inc.
RECEIVING TUBE
OPERATIONS
EMPORIUM, PA.

Prepared and Released By The
TECHNICAL PUBLICATIONS SECTION
EMPORIUM, PENNSYLVANIA

NOVEMBER, 1959

File Under
RECEIVING TUBES

SPECIAL TESTS

Heater Cycling Life Test
Ef = 17.0 V; 1 min. on, 4 min. off;
Ehk = –150 Vdc . . . . . 2000 Cycles Min.

NOTE:

1. *Shield No. 316 connected to cathode of section under test.*

AVERAGE PLATE CHARACTERISTICS
(EACH SECTION)

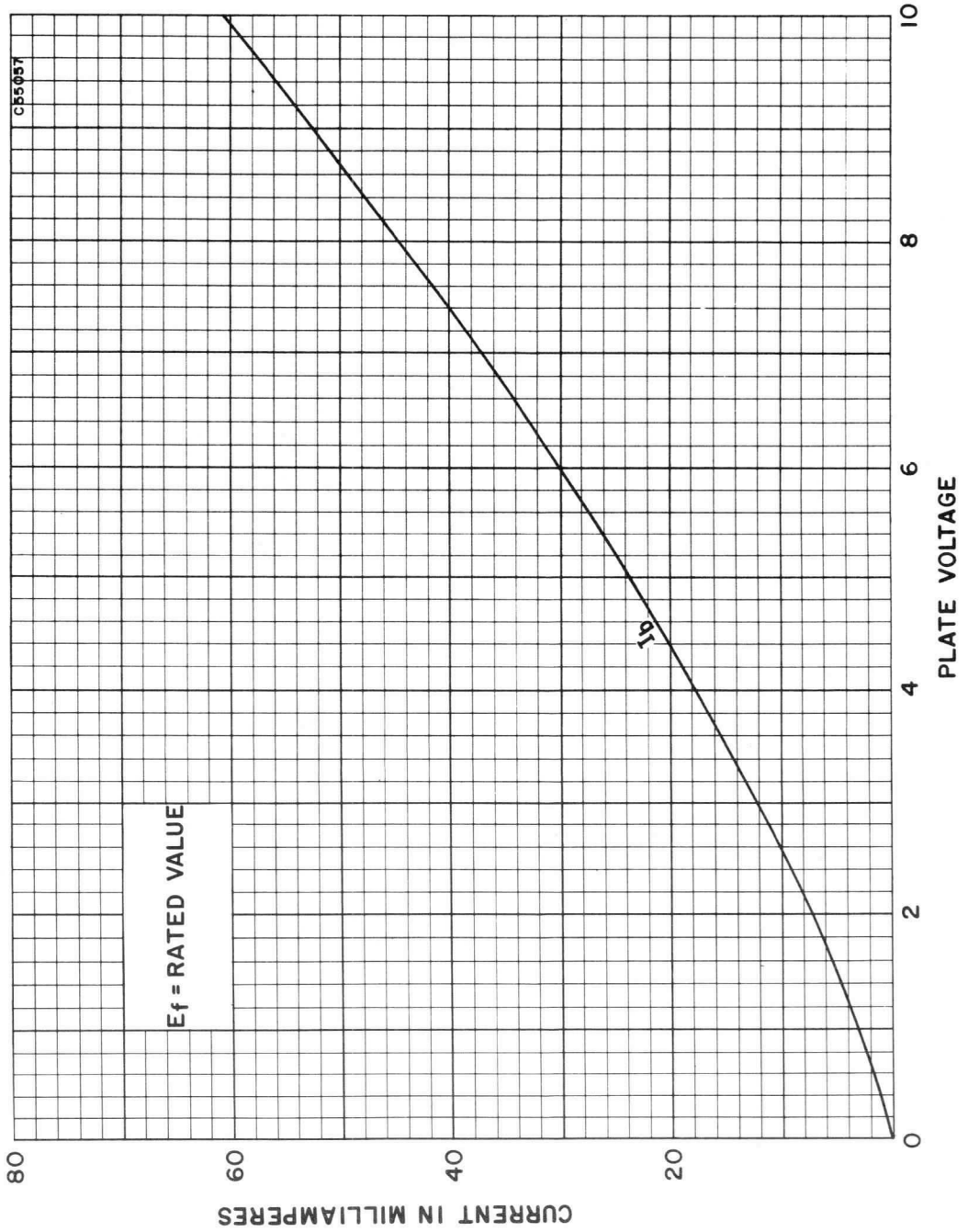

AVERAGE OPERATING CHARACTERISTICS
(HALF WAVE RECTIFICATION — SINGLE DIODE)

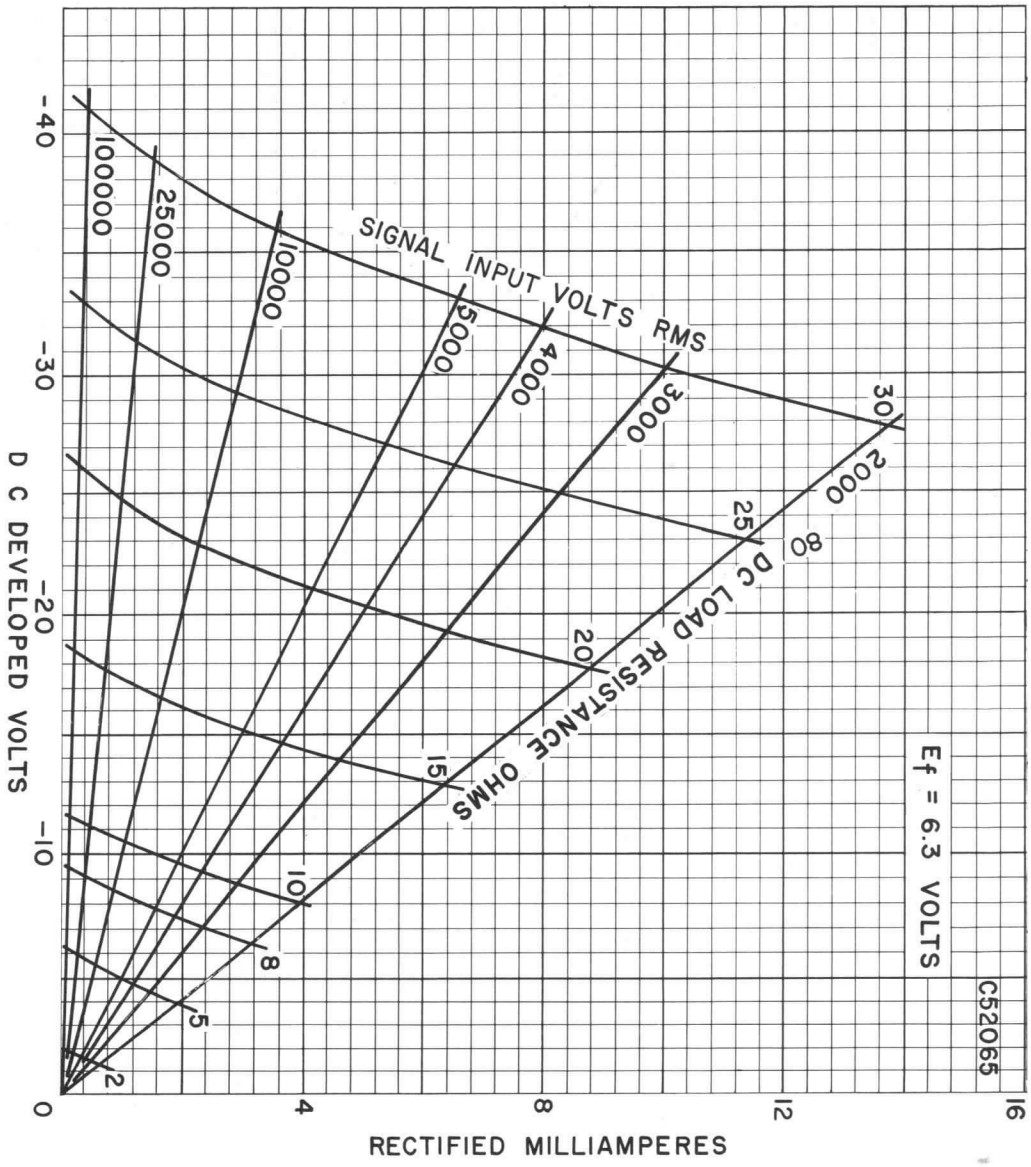

MECHANICAL DATA

Bulb	T-5½
Base	E7-1, Miniature Button 7-Pin
Outline	5-2
Basing	7CM
Cathode	Coated Unipotential
Mounting Position	Any

ELECTRICAL DATA

HEATER CHARACTERISTICS

Heater Voltage Range	12-15	Volts
Heater Current at Ef = 13.5 volts	150	Ma
Heater-Cathode Voltage (Absolute Maximum Values)		
Heater Negative with Respect to Cathode	120	Volts Max.
Heater Positive with Respect to Cathode	120	Volts Max.

DIRECT INTERELECTRODE CAPACITANCES

	(Shielded)[1]	(Unshielded)	
Grid No. 1 to Plate	.01	.02 μμf	Max.
Input: g1 to (h+k+g2+g3+I.S.)	6.5	6.5 μμf	
Output: p to (h+k+g2+g3+I.S.)	3.0	2.0 μμf	

RATINGS (Absolute Maximum Values)

Plate Voltage	330	Volts Max.
Grid No. 2 Supply Voltage	330	Volts Max.
Grid No. 2 Voltage	See Rating Chart	
Plate Dissipation	2.0	Watts Max.
Grid No. 2 Input:		
For Grid No. 2 Voltages up to 165 Volts	0.5	Watt Max.
For Grid No. 2 Voltages between 165-330 Volts	See Rating Chart	

CHARACTERISTICS

Class A1 Amplifier

Plate Voltage	200	Volts
Grid No. 3 Voltage	Connected to Cathode	
Grid No. 2 Voltage	150	Volts
Cathode Bias Resistor	180	Ohms
Plate Current	9.5	Ma
Grid No. 2 Current	2.8	Ma
Transconductance	6200	μmhos
Plate Resistance (Approx.)	0.6	Megohm
Ec1 for I_b = 100 μa (Approx.)	−7	Volts

QUICK REFERENCE DATA

The Sylvania Type 7056 is a miniature, high transconductance, sharp-cutoff pentode intended for use in mobile communications equipment. Featuring a 13.5 volt heater, the 7056 is designed for dependable operation over the wide range of heater voltages encountered in this service.

Except for heater characteristics, the Type 7056 is similar to the 6CB6.

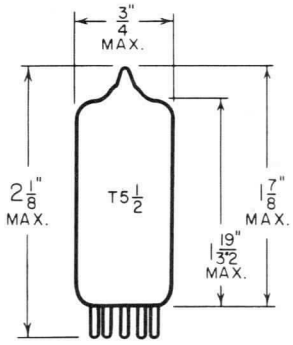

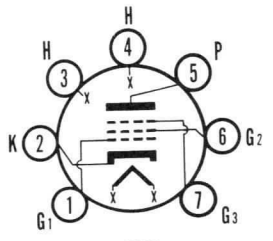

7CM

SYLVANIA
ELECTRONIC TUBES
A Division of
Sylvania Electric Products Inc.
RECEIVING TUBE
OPERATIONS
EMPORIUM, PA.

Prepared and Released By The
TECHNICAL PUBLICATIONS SECTION
EMPORIUM, PENNSYLVANIA

NOVEMBER, 1959

File Under
RECEIVING TUBES

SPECIAL TESTS

Heater Cycling Life Test
Ef = 17.0 V; 1 min. on, 4 min. off;
Ehk = –150 Vdc . . . . . 2000 Cycles Min.

Low-Frequency Vibration: Ep
G = 2.5 @ 25 cps . . . . . 250 mVac Max.

NOTE:

1. Shield No. 315 tied to cathode.

AVERAGE PLATE CHARACTERISTICS

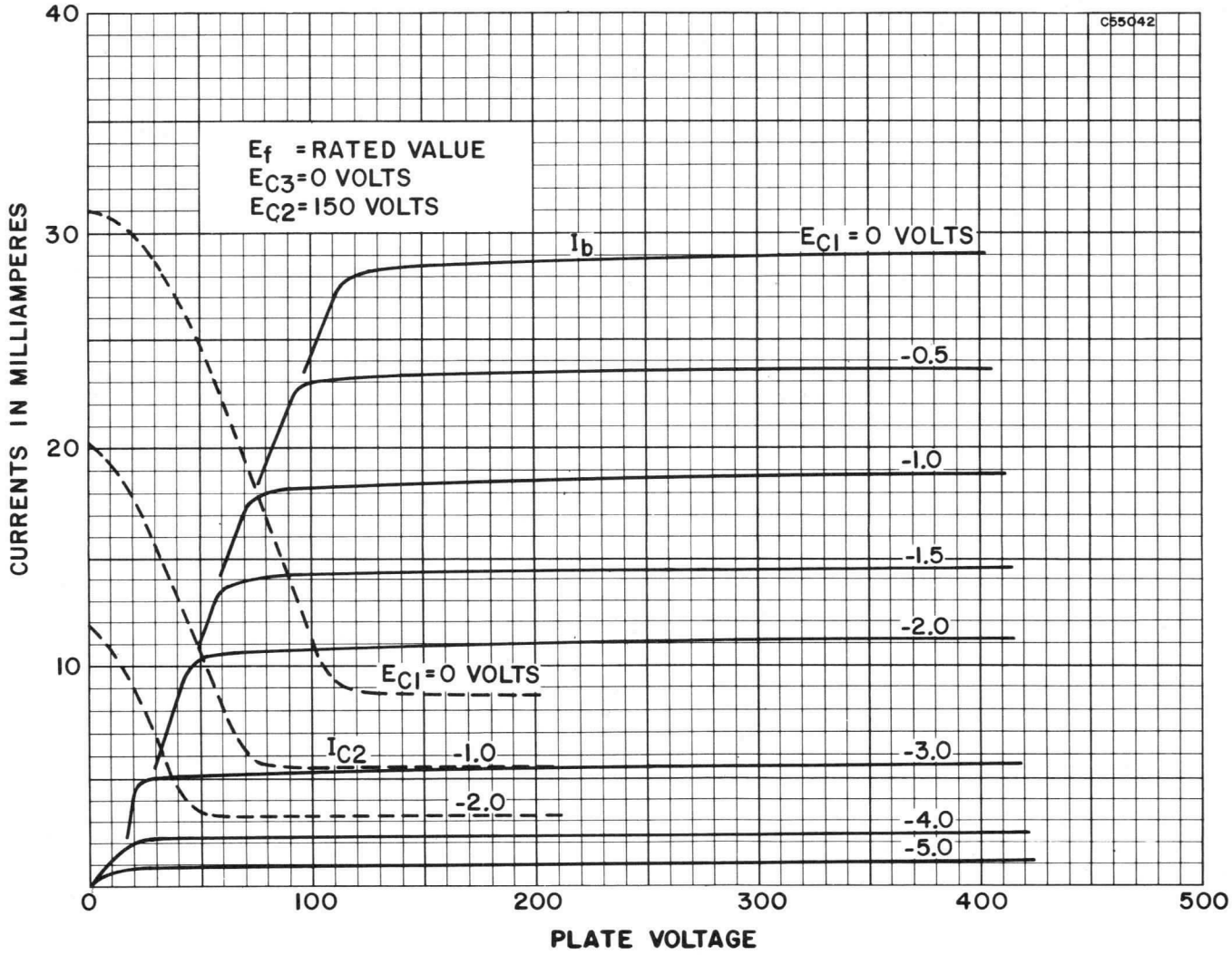

AVERAGE PLATE CHARACTERISTICS

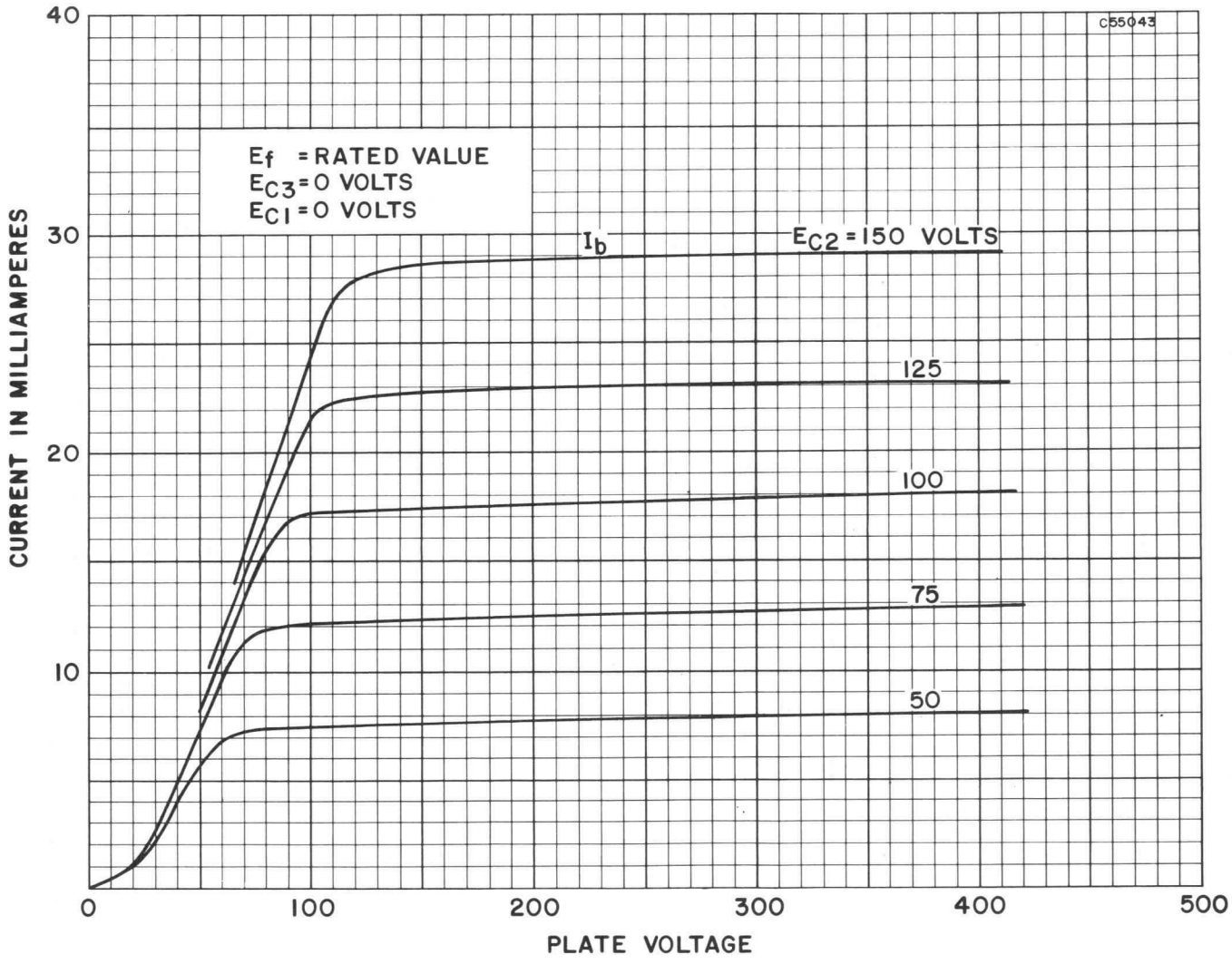

AVERAGE TRANSFER CHARACTERISTICS

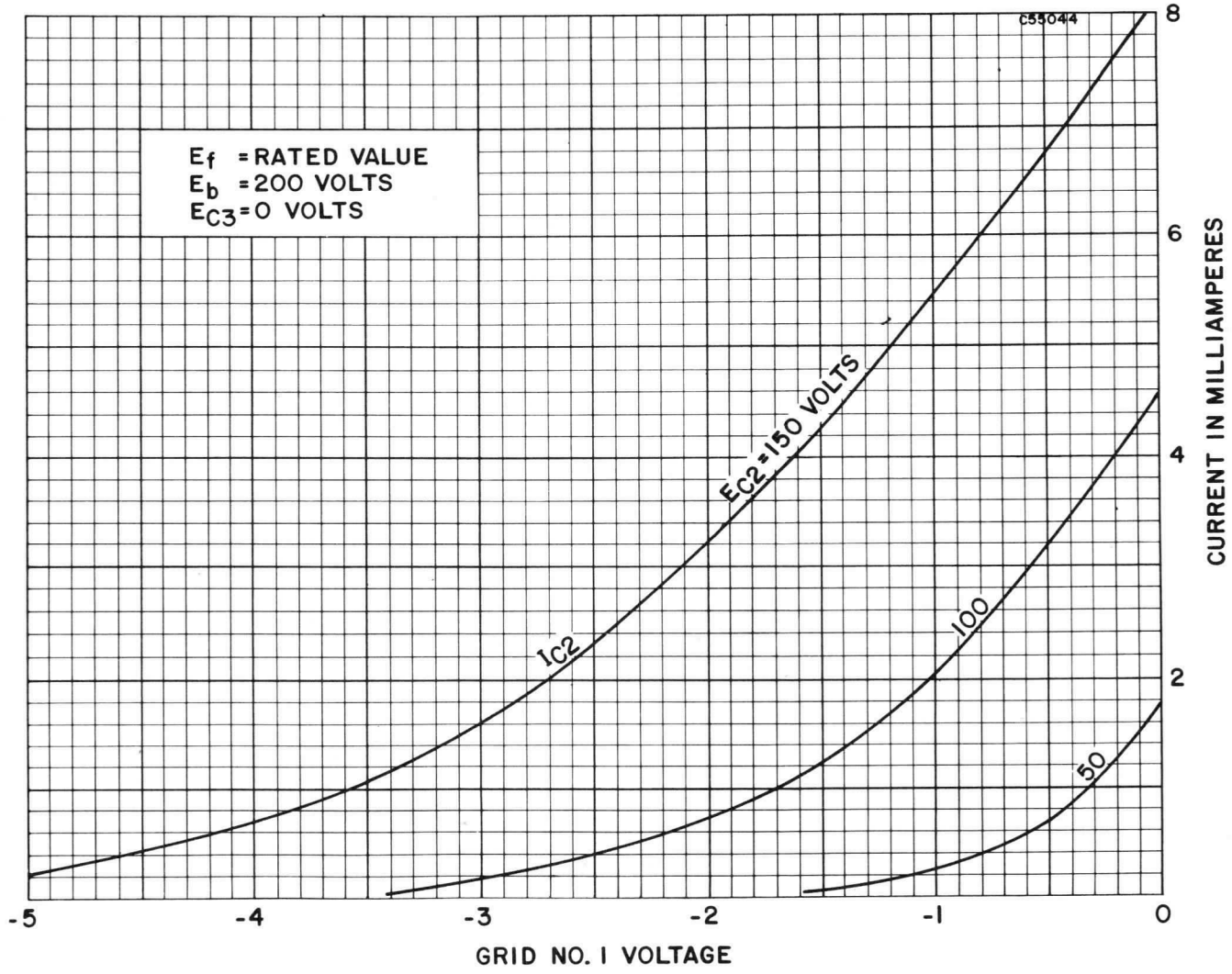

AVERAGE TRANSFER CHARACTERISTICS

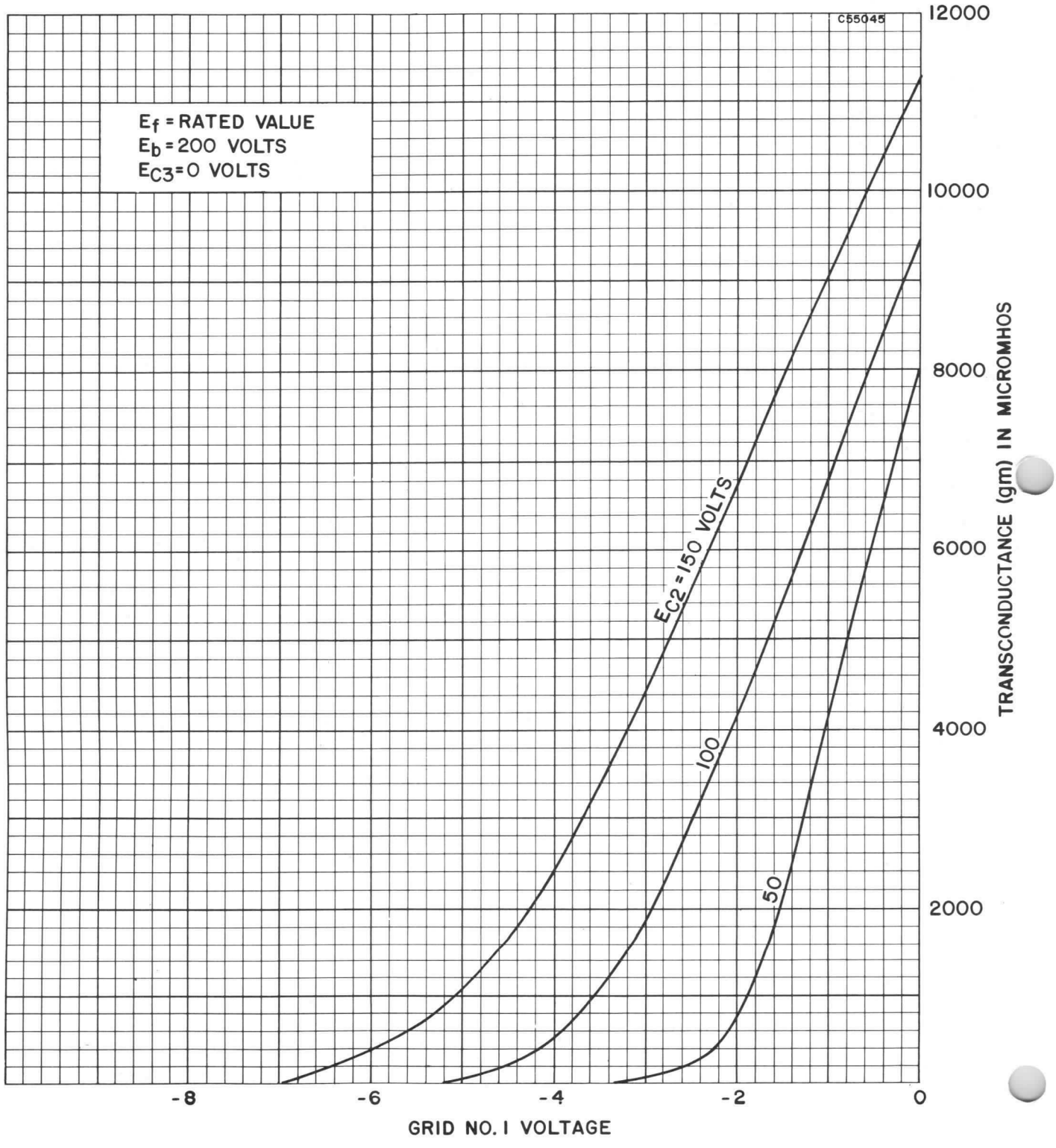

AVERAGE TRANSFER CHARACTERISTICS

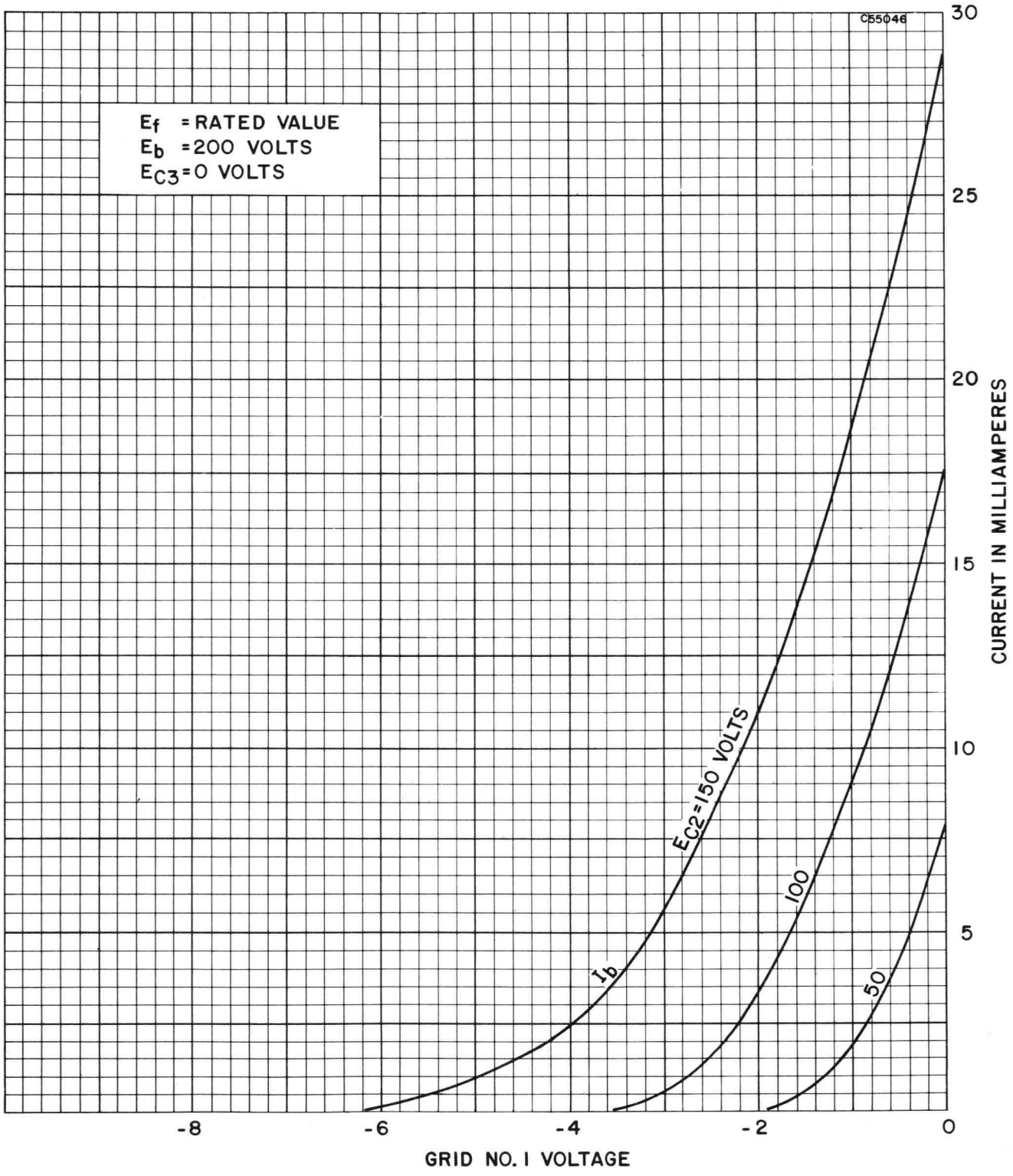

RATING CHART

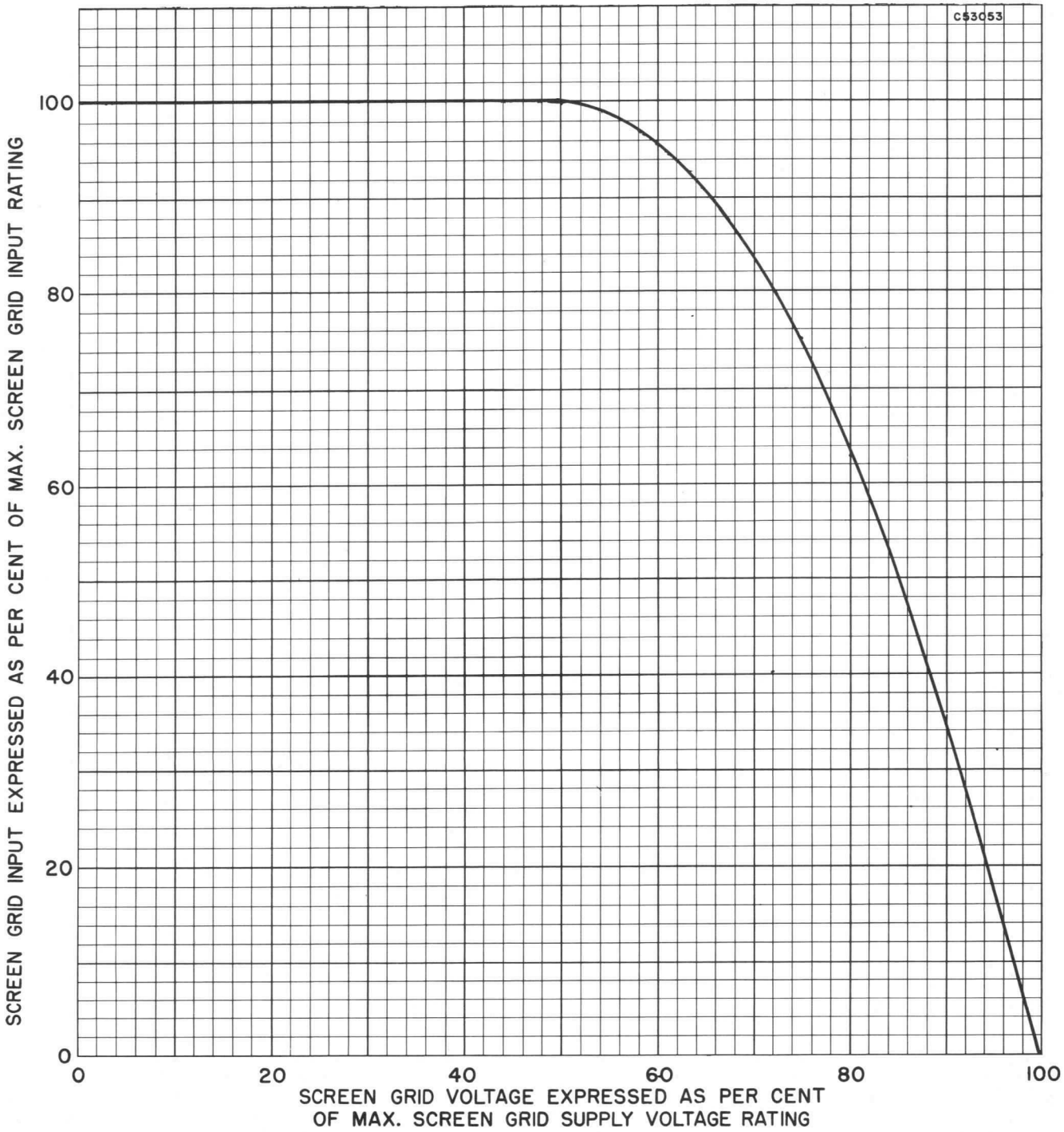

MECHANICAL DATA

Bulb	T-6½
Base	E9-1, Miniature Button 9-Pin
Outline	6-2
Basing	Per Diagram
Cathode	Coated Unipotential
Mounting Position	Any

ELECTRICAL DATA

HEATER CHARACTERISTICS

Heater Voltage Range	12-15 Volts	
Heater Current for Ef = 13.5 Volts	155 Ma	
Heater-Cathode Voltage (Absolute Maximum Values)		
Heater Negative with Respect to Cathode	120 Volts	Max.
Heater Positive with Respect to Cathode	120 Volts	Max.

DIRECT INTERELECTRODE CAPACITANCES (Unshielded)

	Section 1[1]	Section 2[1]
Grid to Plate	1.7	1.7 μμf
Input g to (h + k)	1.6	1.6 μμf
Output p to (h + k)	0.46	0.34 μμf

RATINGS (Absolute Maximum Values—Each Section)

Plate Voltage	330 Volts	Max.
Plate Dissipation	1.0 Watt	Max.
Positive Grid Voltage	0 Volts	Max.
Negative Grid Voltage	−55 Volts	Max.
Grid Resistance:		
Fixed Bias	0.5 Megohm	Max.
Cathode Bias	1.0 Megohm	Max.

CHARACTERISTICS AND TYPICAL OPERATION

Class A_1 Amplifier (Each Section)

Plate Voltage	250 Volts
Grid Voltage	−2 Volts
Plate Current	1.25 Ma
Plate Resistance	61,000 Ohms
Transconductance	1650 μmhos
Amplification Factor	100
Ec for I_b = 10 μa (Approx.)	−5 Volts

QUICK REFERENCE DATA

The Sylvania Type 7058 is a miniature high mu twin triode having separate cathodes. It is intended for use in mobile communications equipment. Featuring a 13.5 volt heater, the 7058 is designed for dependable operation over the wide range of heater voltage encountered in this service.

Except for heater characteristics, the Type 7058 is similar to the 12AX7.

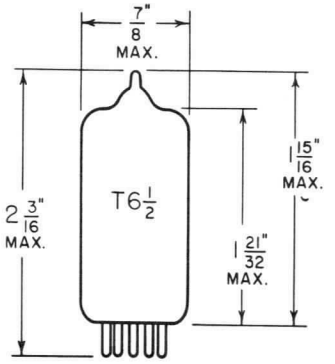

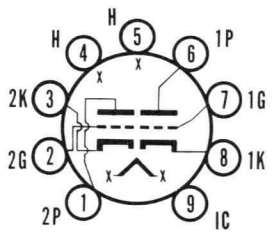

SYLVANIA
ELECTRONIC TUBES
A Division of
Sylvania Electric Products Inc.
RECEIVING TUBE
OPERATIONS
EMPORIUM, PA.

Prepared and Released By The
TECHNICAL PUBLICATIONS SECTION
EMPORIUM, PENNSYLVANIA

NOVEMBER, 1959

File Under
RECEIVING TUBES

SPECIAL TESTS

Heater Cycling Life Test
Ef = 17.0 V; 1 min. on, 4 min. off;
Ehk = 150 Vdc . . . . . 2000 Cycles Min.

Low-Frequency Vibration[2]: Ep
G = 2.5 @ 25 cps . . . . . 150 mVac Max.

NOTES:

1. *Section No. 1 connects to Pins 6, 7 and 8.*
   Section No. 2 connects to Pins 1, 2 and 3.
2. *Sections connected in parallel.*

AVERAGE PLATE CHARACTERISTICS
(EACH SECTION)

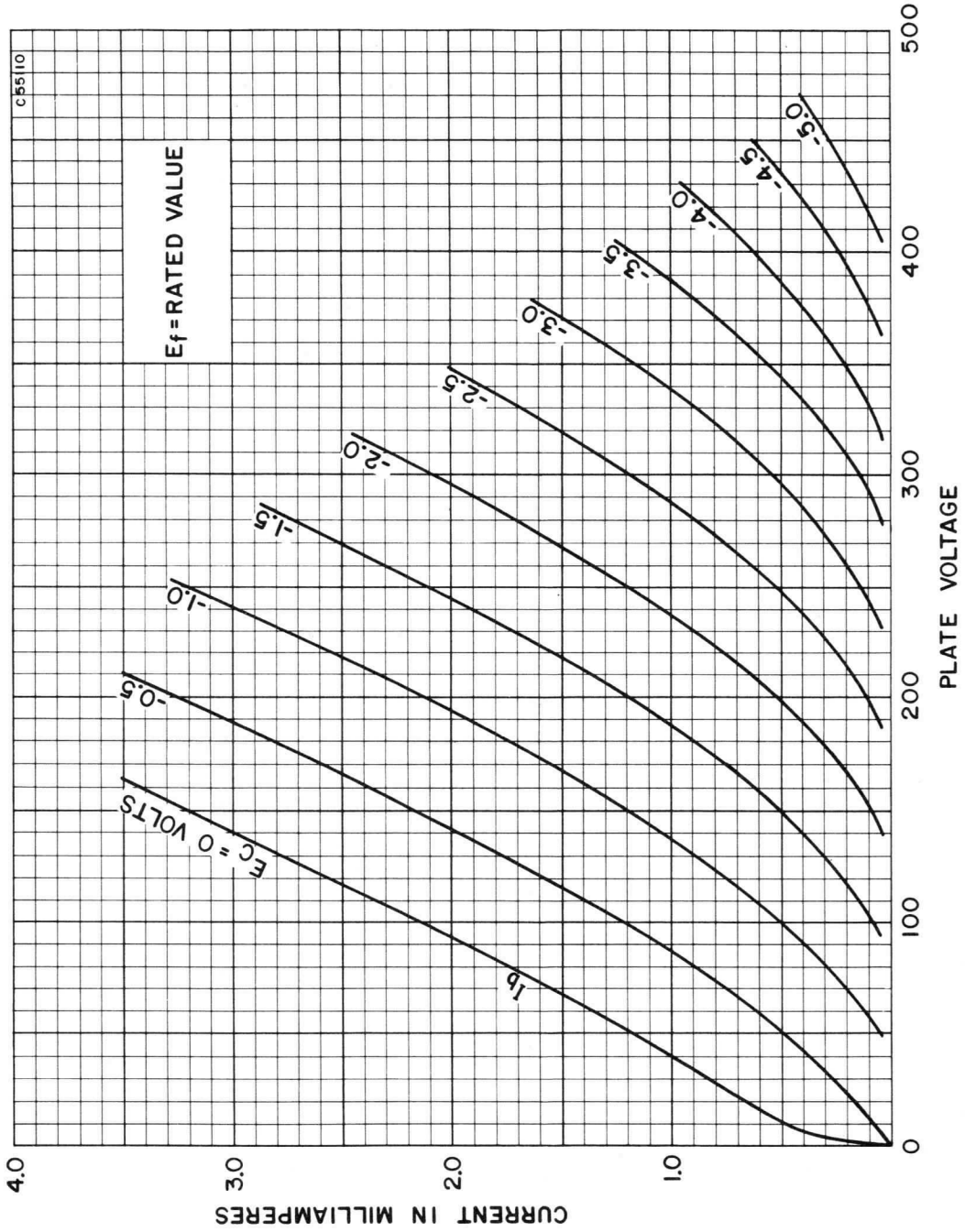

AVERAGE TRANSFER CHARACTERISTICS
(EACH SECTION)

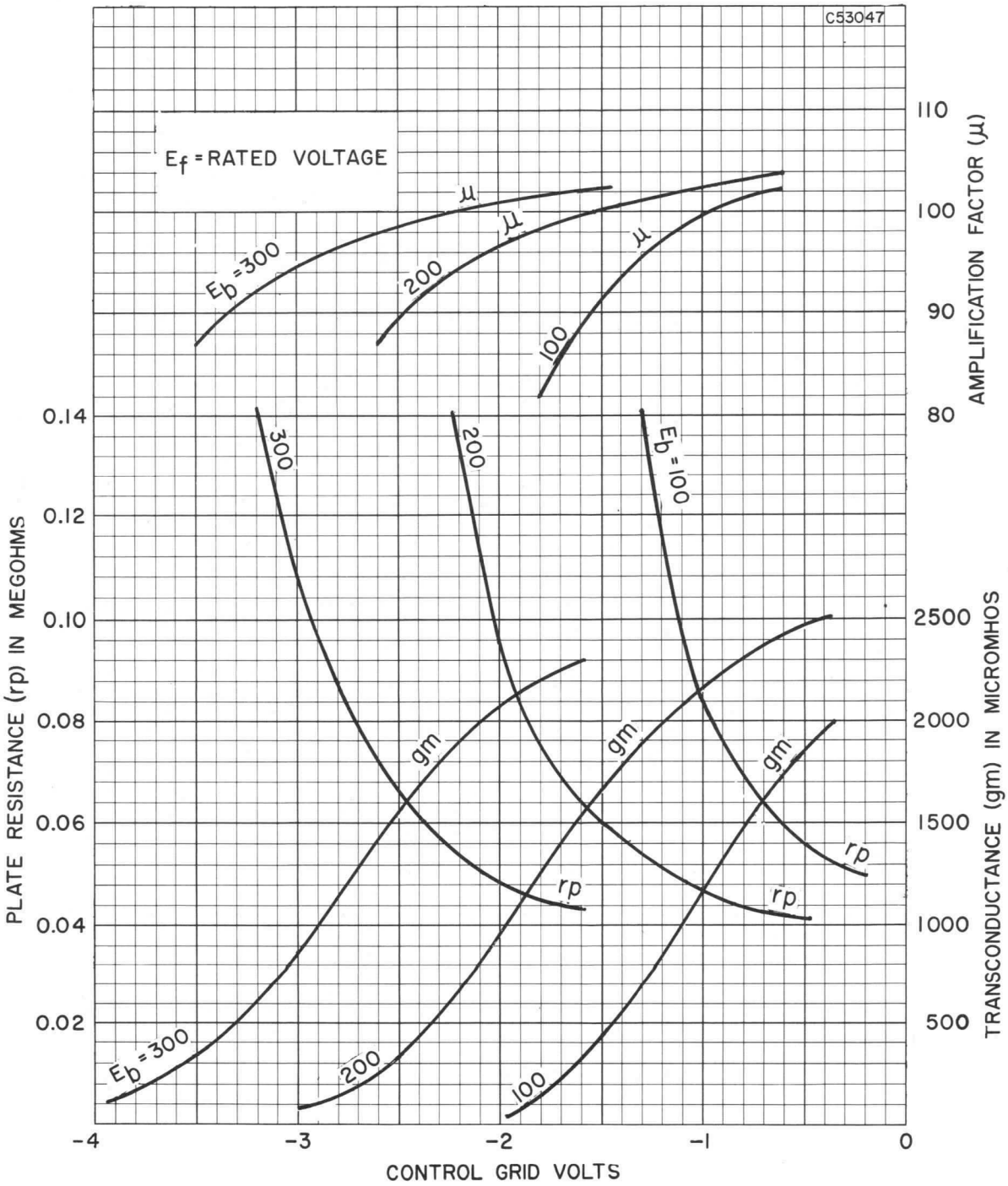

MECHANICAL DATA

Bulb	T-6½
Base	E9-1, Miniature Button 9-Pin
Outline	6-2
Basing	Per Diagram
Cathode	Coated Unipotential
Mounting Position	Any

ELECTRICAL DATA

HEATER CHARACTERISTICS

Heater Voltage Range	12-15 Volts	
Heater Current at Ef = 13.5 Volts	280 Ma	
Heater-Cathode Voltage (Absolute Maximum Values)		
Heater Negative with Respect to Cathode	120 Volts	Max.
Heater Positive with Respect to Cathode	120 Volts	Max.

DIRECT INTERELECTRODE CAPACITANCES (Unshielded)

Triode		
Grid to Plate	2.2 μμf	
Input	2.4 μμf	
Output	0.22 μμf	
Pentode		
Grid to Plate	0.044 μμf	
Input	7.1 μμf	
Output	2.5 μμf	
Coupling: Pentode Grid No. 1 to Triode Plate	0.015 μμf	Max.
Coupling: Triode Grid to Pentode Plate	0.022 μμf	Max.
Coupling: Pentode Plate to Triode Plate	0.16 μμf	Max.

RATINGS (Absolute Maximum Values)

Class A1 Amplifier	Triode Section	Pentode Section	
Plate Voltage	300	300 Volts	Max.
Grid No. 2 Supply Voltage	.....	300 Volts	Max.
Grid No. 2 Voltage	See Rating Chart		
Plate Dissipation	2.5	3.0 Watts	Max.
Grid No. 2 Dissipation	.....	1.0 Watts	Max.
Positive Grid No. 1 Voltage	0	0 Volts	Max.
Grid No. 1 Circuit Resistance			
Fixed Bias	0.5	0.25 Megohm	Max.
Self Bias	1.0	1.0 Megohm	Max.

QUICK REFERENCE DATA

The Sylvania Type 7060 is a miniature medium mu triode sharp cutoff pentode intended for use in mobile communications equipment. Featuring a 13.5 volt heater, the 7060 is designed for dependable operation over the wide range of heater voltage encountered in this service.

Except for heater characteristics, the Type 7060 is similar to the 6AU8.

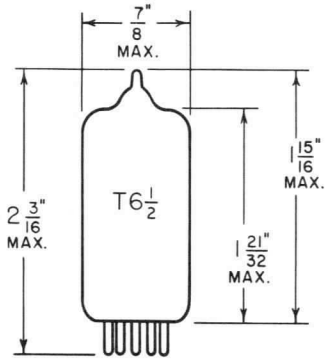

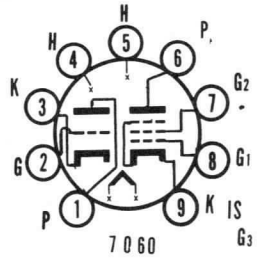

SYLVANIA
ELECTRONIC TUBES
A Division of
Sylvania Electric Products Inc.
RECEIVING TUBE
OPERATIONS
EMPORIUM, PA.

Prepared and Released By The
TECHNICAL PUBLICATIONS SECTION
EMPORIUM, PENNSYLVANIA

NOVEMBER, 1959

File Under
RECEIVING TUBES

(Class C Amplifier)	(CCS) RF Power Amp. & Osc.[1] and FM RF Power Amp.		
Plate Voltage	300	Volts	Max.
Grid No. 3 Voltage	0	Volts	Max.
Grid No. 2 Voltage	150	Volts	Max.
Negative Grid No. 1 Voltage	50	Volts	Max.
Positive Grid No. 1 Voltage	0	Volts	Max.
Plate Current	20	Ma	Max.
Grid No. 2 Current	7	Ma	Max.
Grid No. 1 Current	3	Ma	Max.
Plate Dissipation	2.75	Watts	Max.
Grid No. 2 Dissipation	0.8	Watt	Max.
Grid No. 1 Circuit Resistance	0.1	Megohm	Max.

CHARACTERISTICS AND TYPICAL OPERATION

(Class A1 Amplifier)	Triode Section	Pentode Section	
Plate Voltage	150	200	Volts
Grid No. 2 Voltage	.....	125	Volts
Cathode Bias Resistor	150	82	Ohms
Amplification Factor	40	.....	
Plate Resistance (Approx.)	0.0082	0.15	Megohm
Transconductance	4900	7000	μmhos
Plate Current	9.0	15	Ma
Grid No. 2 Current		3.4	Ma
EC1 for I_b = 100 μa (Approx.)	–6.5	–8.0	Volts

(Class C Amplifier)	RF Power Amp. & Osc.[1] and FM RF Power Amp.			
Plate Voltage	200	250	300	Volts
Grid No. 3	Connected to Cathode			
Grid No. 2 Voltage	85	105	125	Volts
Grid No. 1 Voltage	–7	–9	–11	Volts
Plate Current	11	15	20	Ma
Grid No. 2 Current	3.2	4.5	6	Ma
Grid No. 1 Current (Approx.)	0.9	1.2	1.6	Ma
Driving Power (Approx.)	9	15	25	Mw
Power Output	1.3	2.1	3.5	Watts

SPECIAL TESTS

Heater Cycling Life Test
Ef = 17.0 V; 1 min. on, 4 min. off;
Ehk = –150 Vdc . . . . . 2000 Cycles Min.

Low Frequency Vibration: Ep
G = 2.5 @ 25 cps
Triode Section . . . . . 150 mVac Max.
Pentode Section . . . . . 250 mVac Max.

NOTE:

1. *Key-down conditions per tube without amplitude modulation. Amplitude modulation essentially negative may be used if the positive peak of the audio-frequency envelope does not exceed 115% of the carrier conditions.*

AVERAGE PLATE CHARACTERISTICS
(TRIODE SECTION)

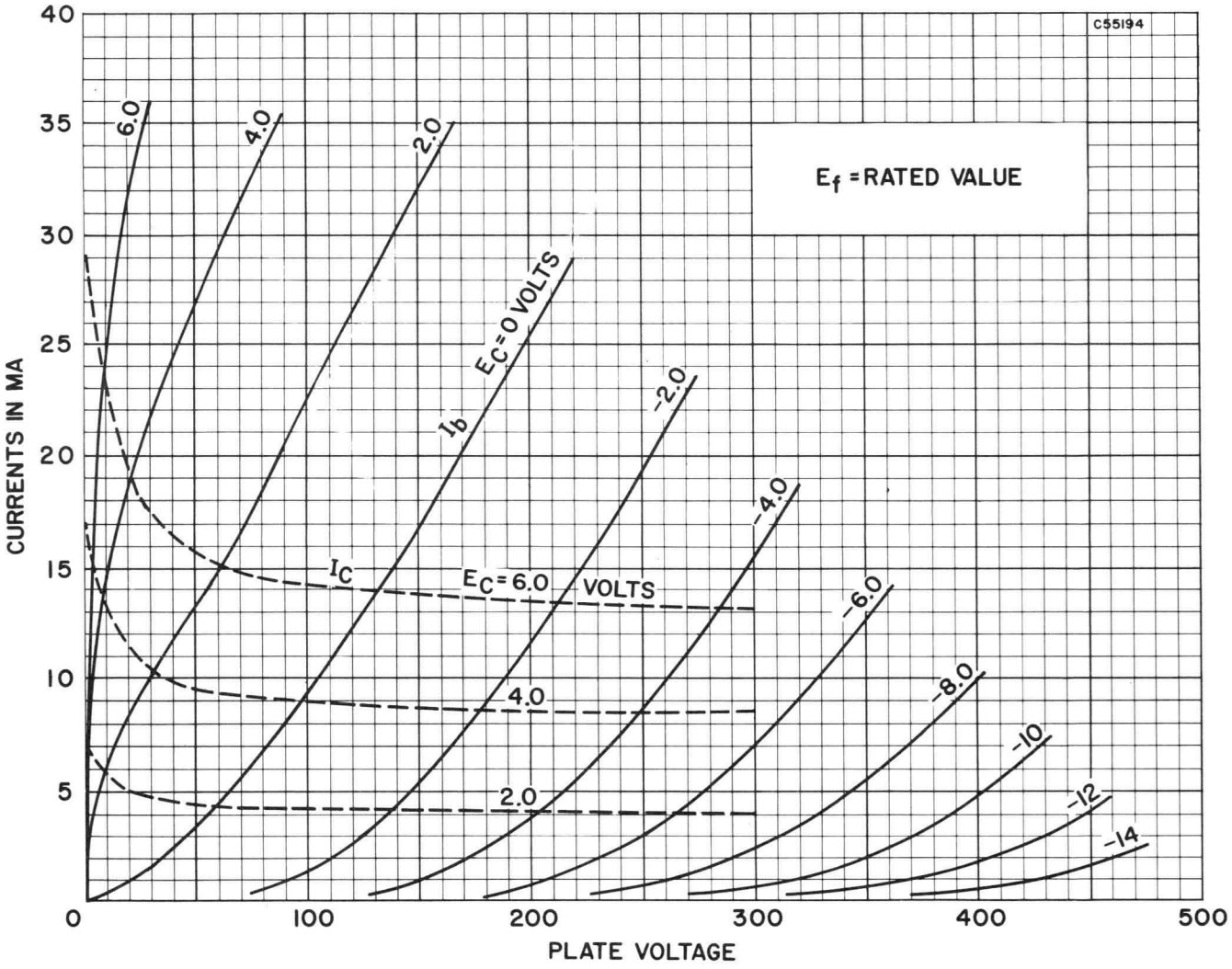

AVERAGE TRANSFER CHARACTERISTICS
(TRIODE SECTION)

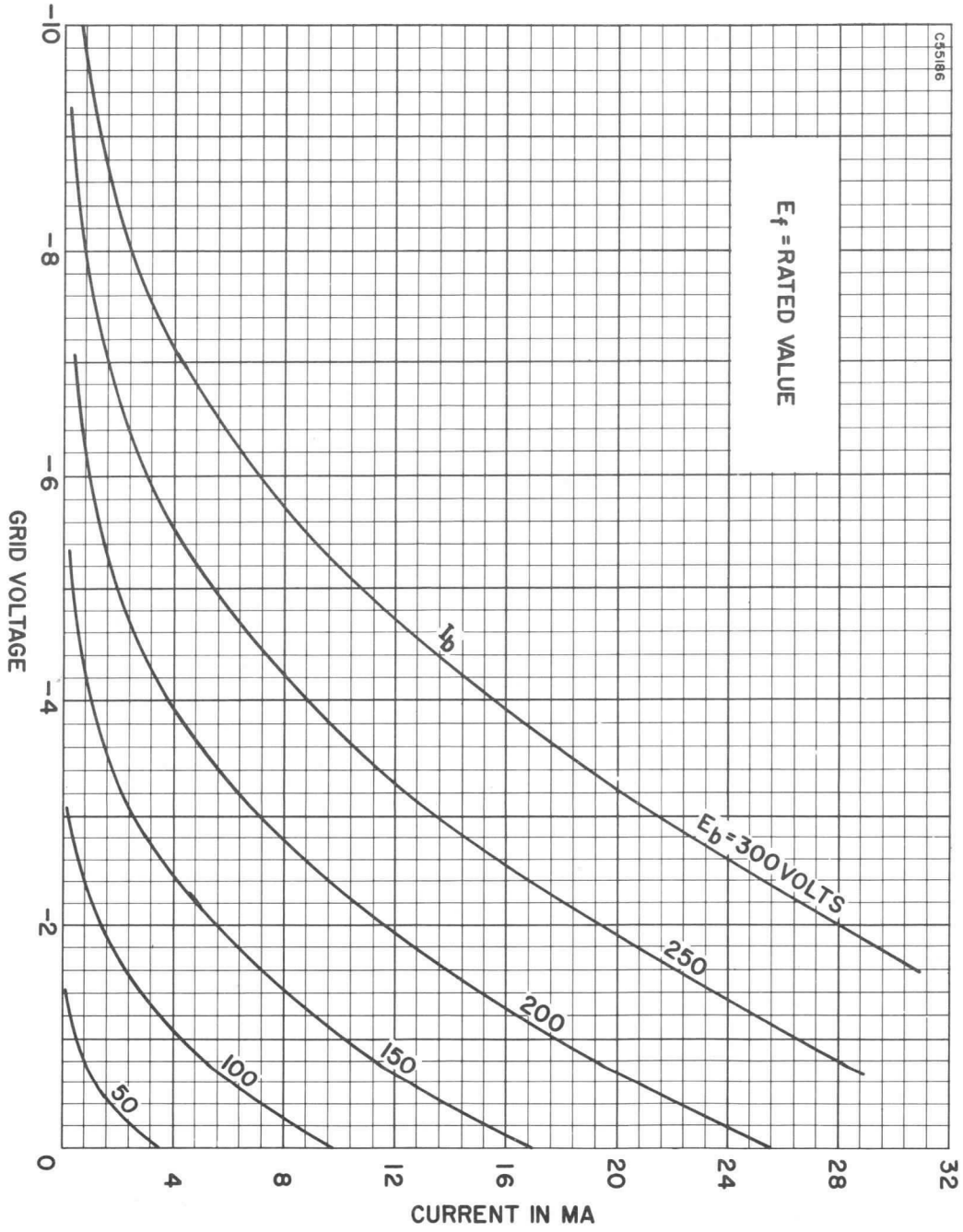

AVERAGE TRANSFER CHARACTERISTICS
(TRIODE SECTION)

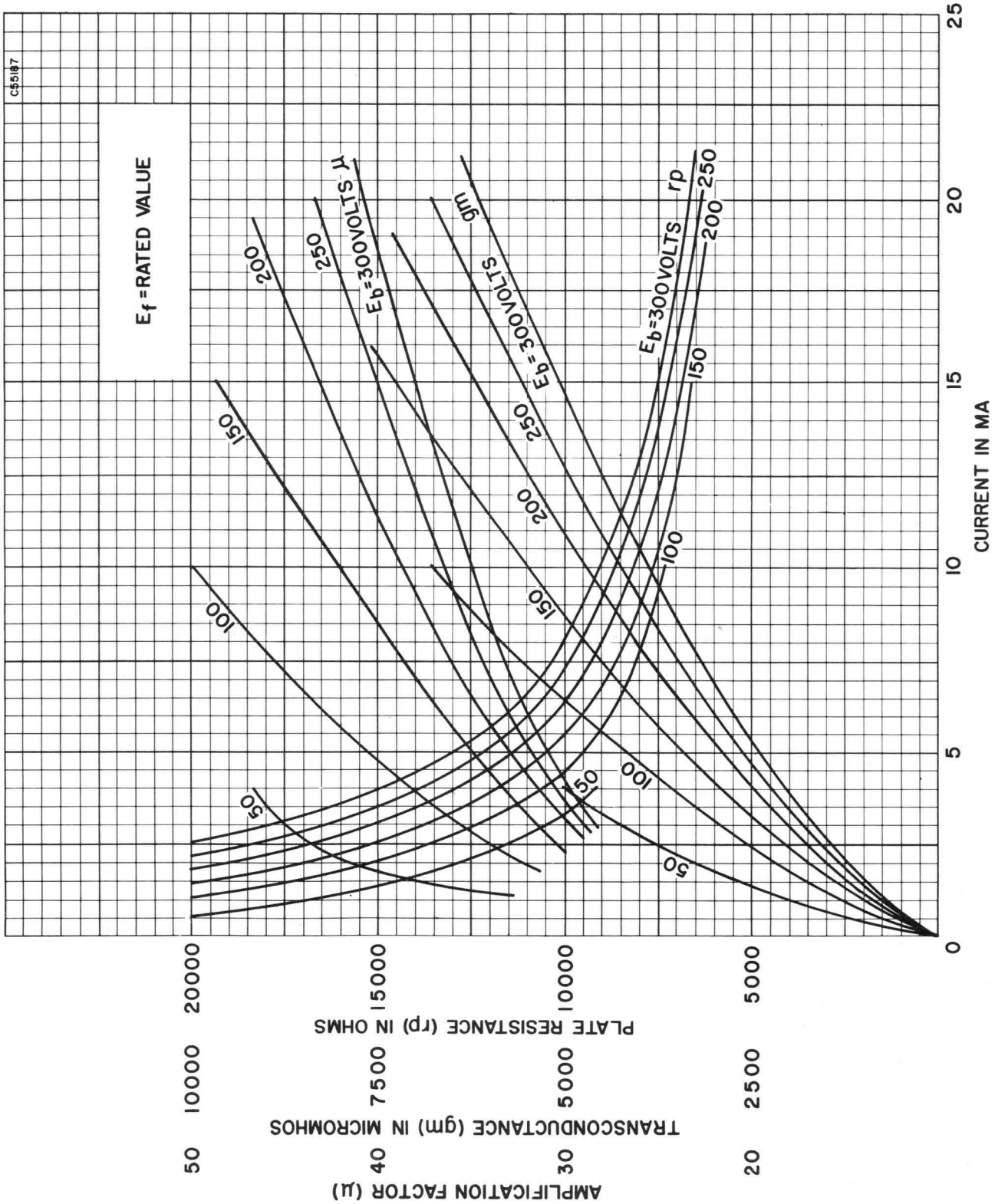

AVERAGE PLATE CHARACTERISTICS
(PENTODE SECTION)

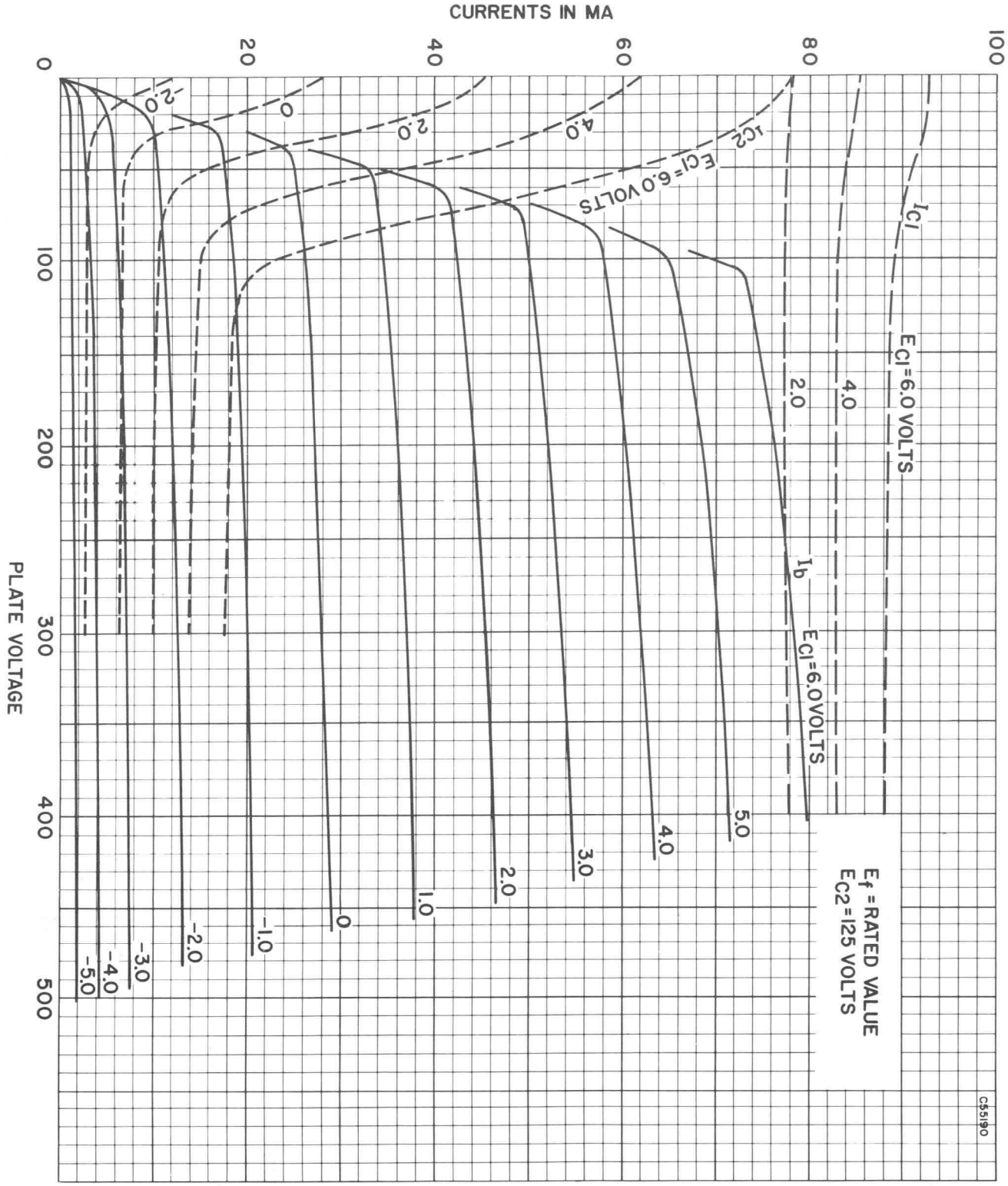

AVERAGE PLATE CHARACTERISTICS
(PENTODE SECTION)

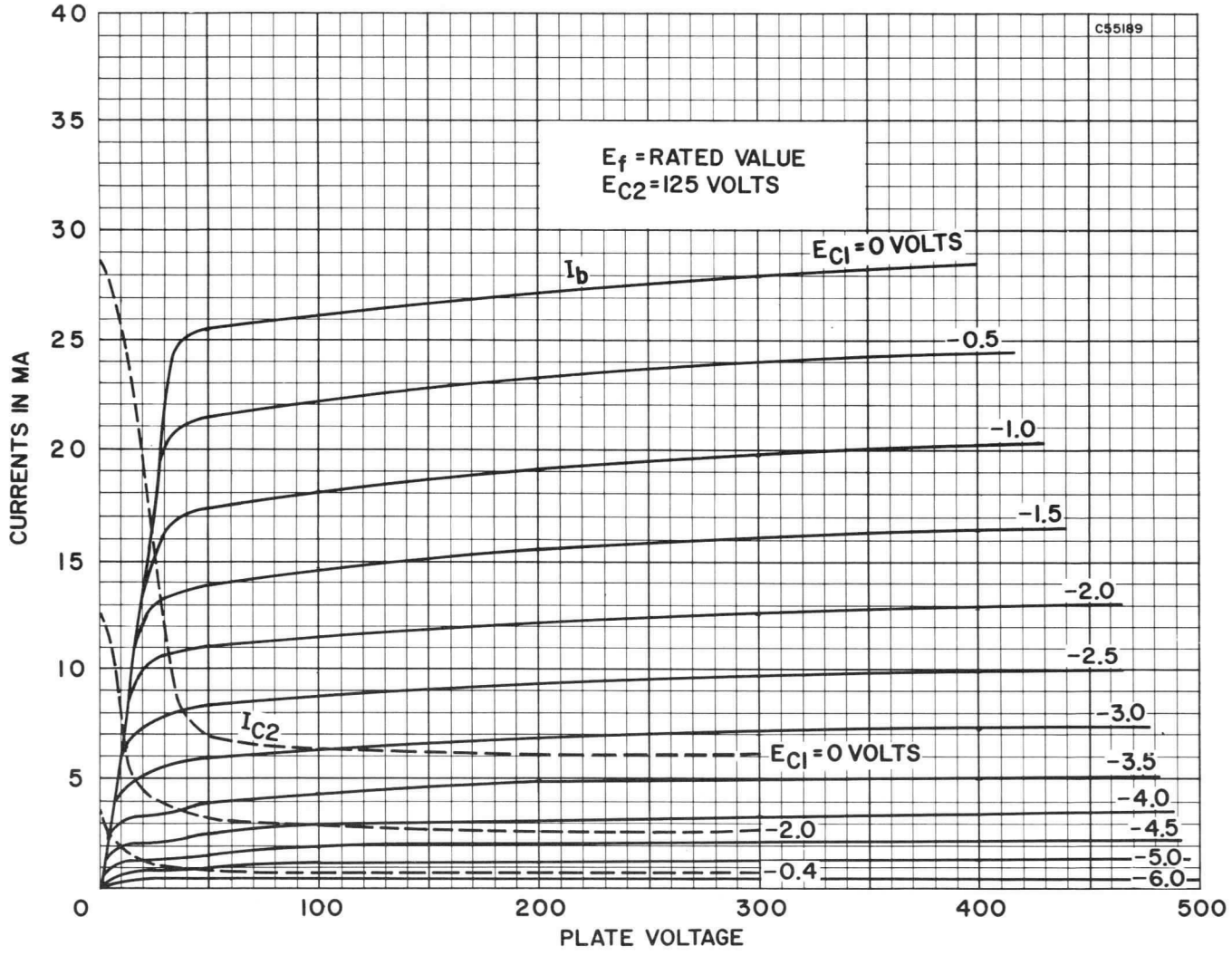

AVERAGE PLATE CHARACTERISTICS
(PENTODE SECTION)

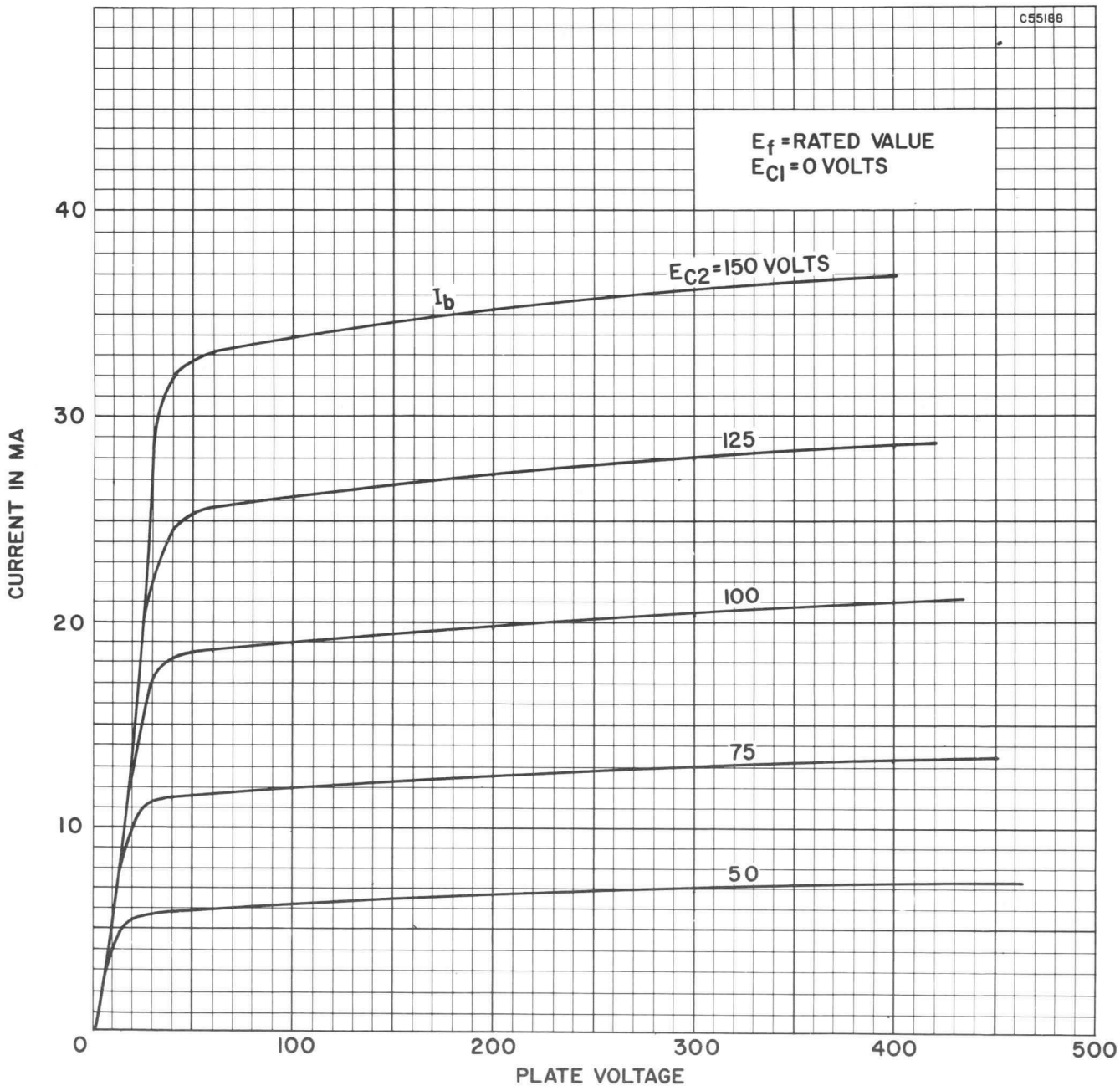

AVERAGE TRANSFER CHARACTERISTICS
(PENTODE SECTION)

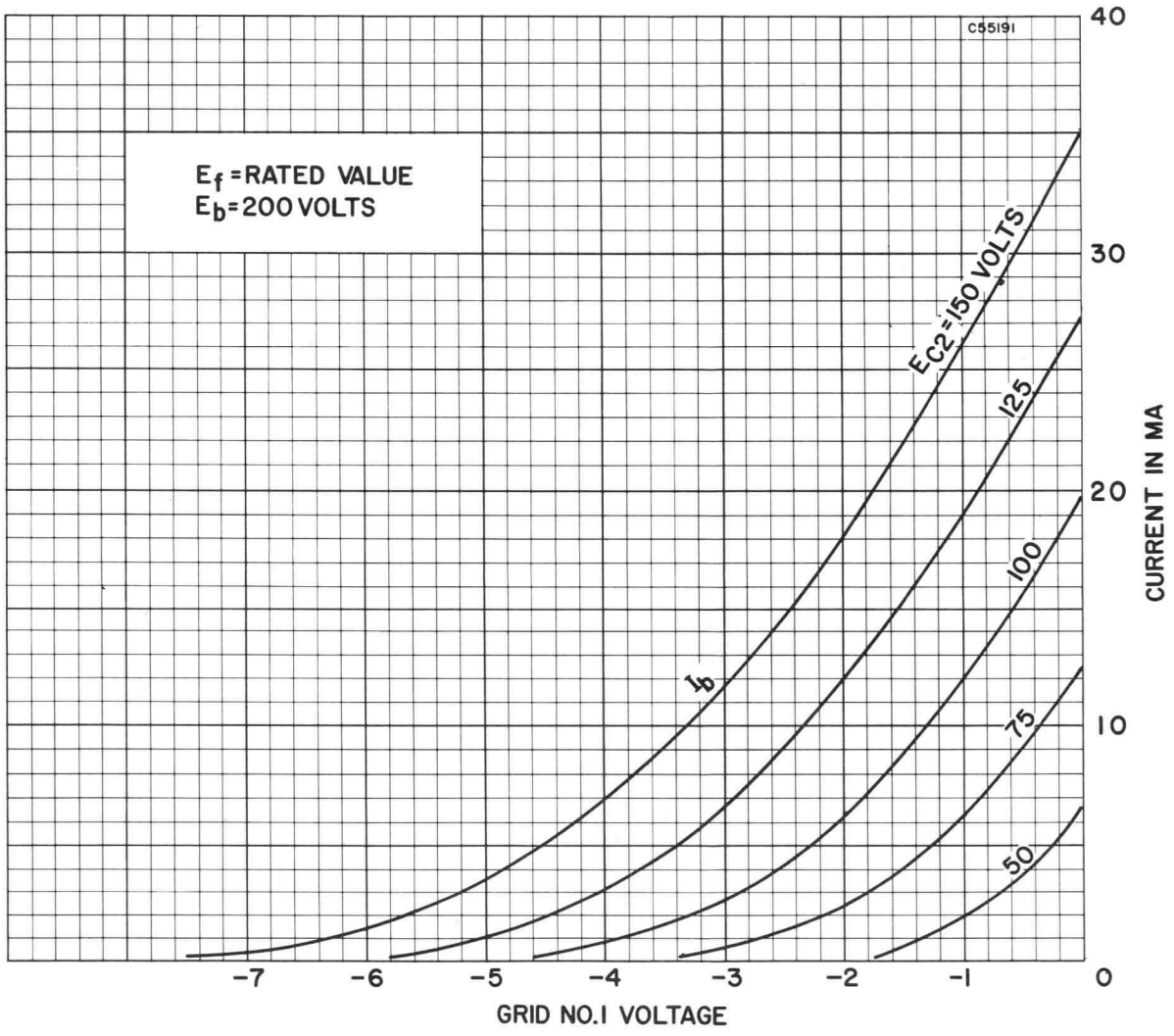

AVERAGE TRANSFER CHARACTERISTICS
(PENTODE SECTION)

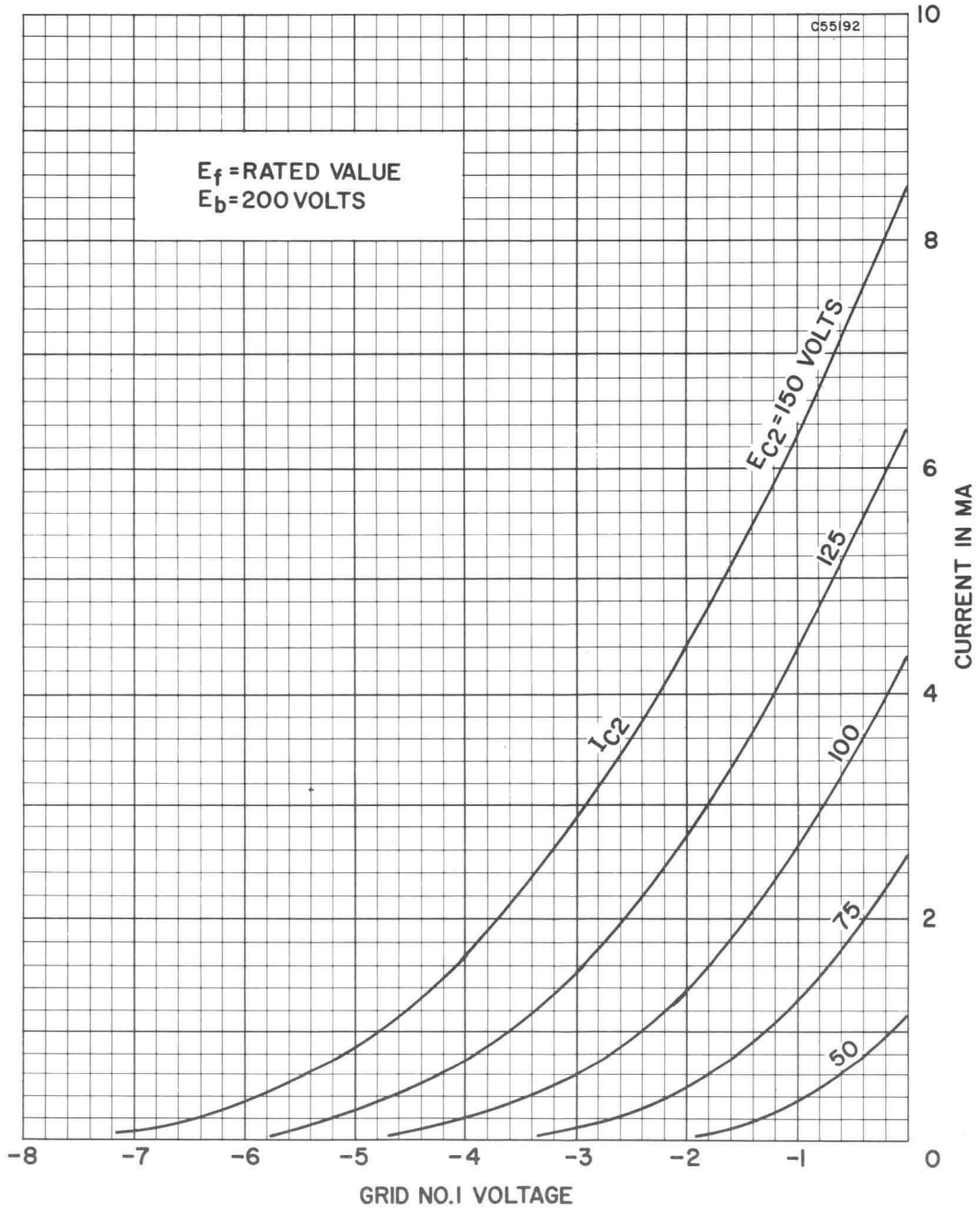

AVERAGE TRANSFER CHARACTERISTICS
(PENTODE SECTION)

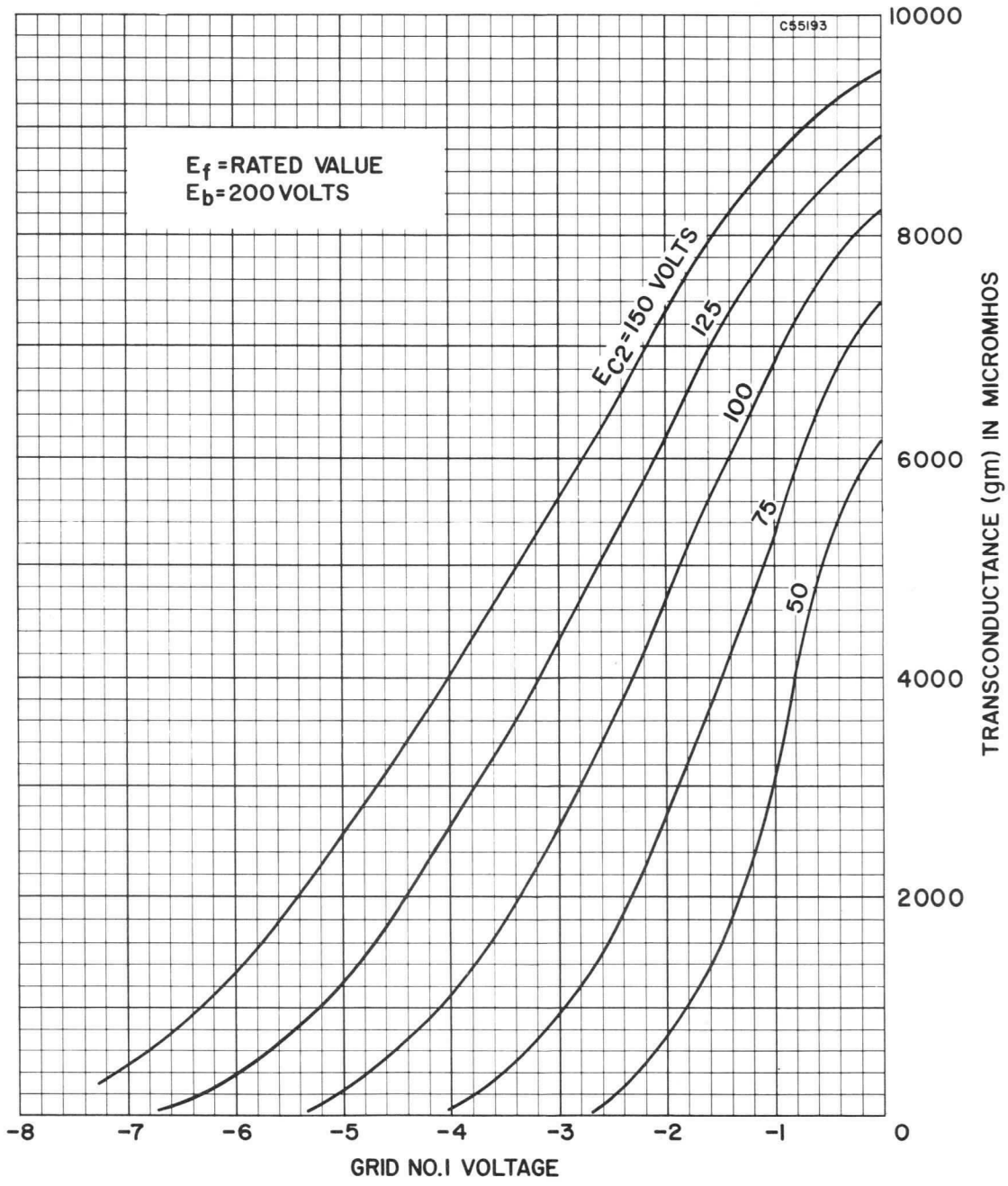

GRID NO. 2 RATING CHART

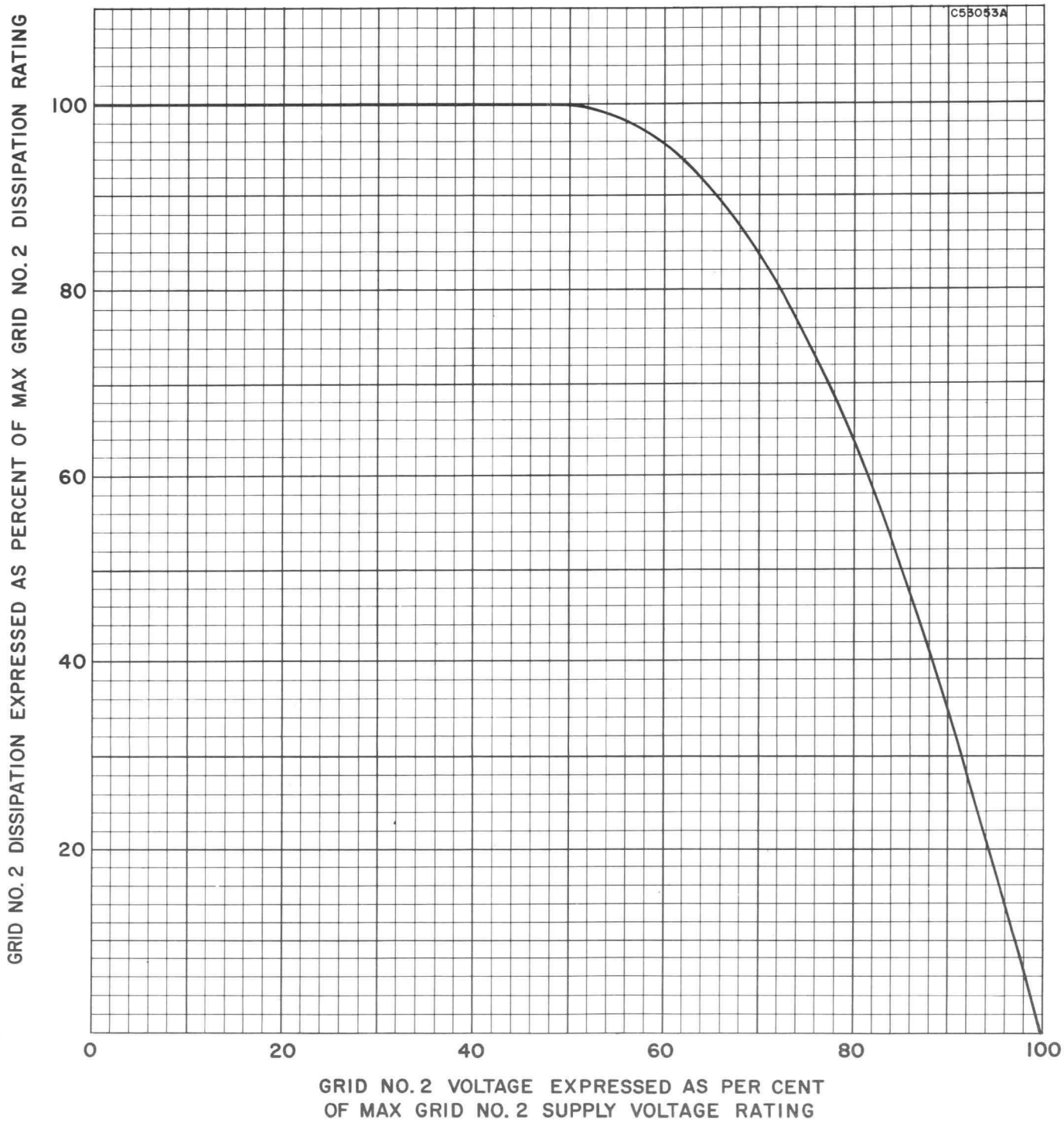

AVERAGE CONSTANT CURRENT CHARACTERISTICS

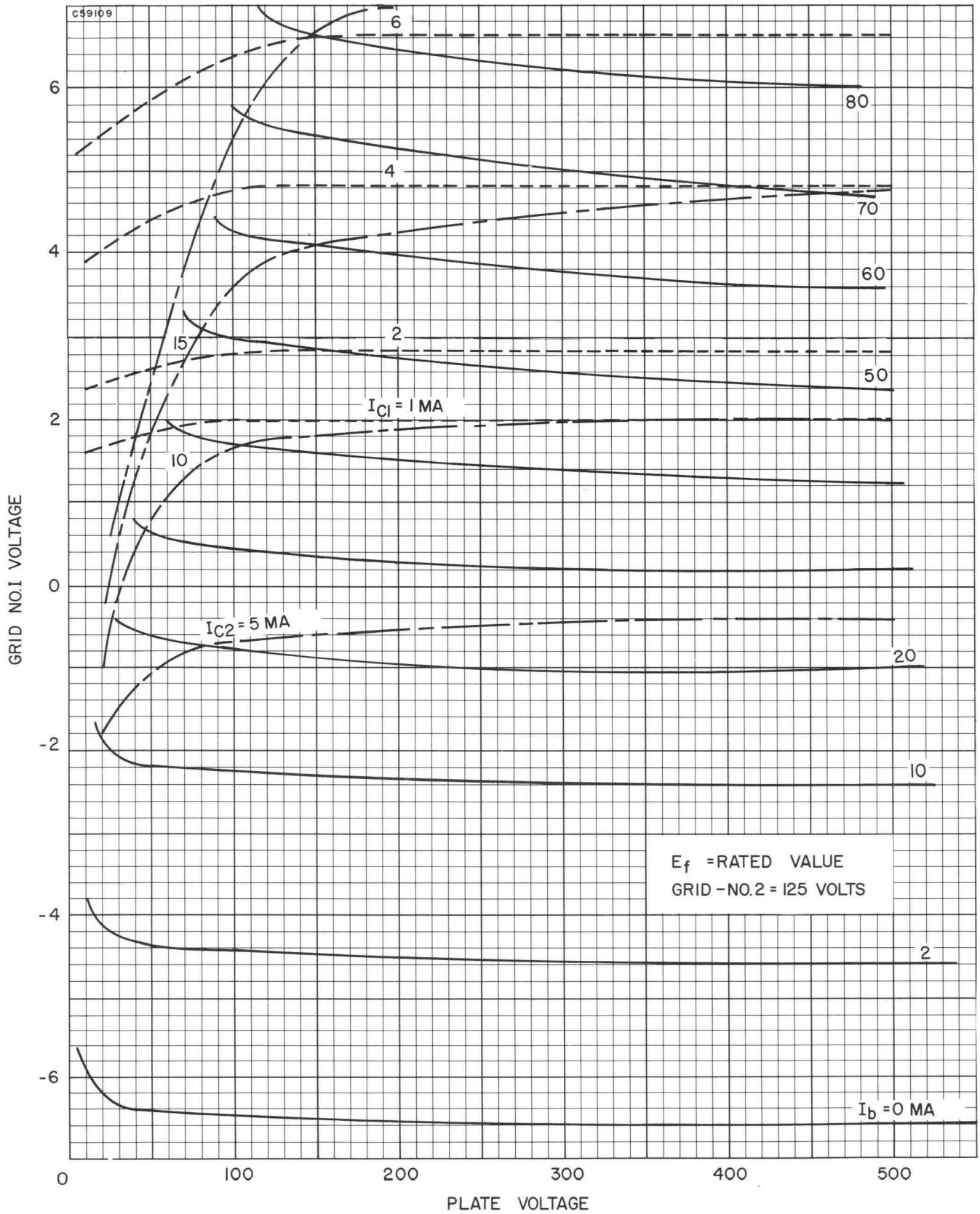

A Technical Publication of
SYLVANIA ELECTRIC
PRODUCTS INC.
EMPORIUM, PA.

MECHANICAL DATA

Bulb	T-5½
Base	E7-1, Miniature Button 7-Pin
Outline	5-2
Basing	7EW
Cathode	Coated Unipotential
Mounting Position	Any

ELECTRICAL DATA

HEATER CHARACTERISTICS

Heater Voltage Range	12-15 Volts	
Heater Current at Ef = 13.5 Volts	90 Ma	
Heater-Cathode Voltage (Design Maximum Values)		
Heater Negative with Respect to Cathode		
Total DC and Peak	100 Volts	Max.
Heater Positive with Respect to Cathode		
DC	50 Volts	Max.
Total DC and Peak	100 Volts	Max.

DIRECT INTERELECTRODE CAPACITANCES (Shielded)[1]

Grid No. 1 to Plate	0.03 μμf	Max.
Input	4.4 μμf	
Output	2.74 μμf	

RATINGS (Design Maximum Values)

Plate Voltage	180 Volts	Max.
Grid No. 2 Supply Voltage	180 Volts	Max.
Grid No. 2 Voltage	See Rating Chart	
Plate Dissipation	2.0 Watts	Max.
Grid No. 2 Dissipation	0.5 Watts	Max.
Positive Grid No. 1 Voltage	0 Volts	Max.
Cathode Current	20 Ma	Max.
Grid No. 1 Circuit Resistance	0.5 Megohm	Max.

CHARACTERISTICS AND TYPICAL OPERATION

Plate Voltage	125 Volts
Grid No. 2 Voltage	80 Volts
Grid No. 1 Voltage	−1.0 Volt
Plate Current	10 Ma
Grid No. 2 Current	1.4 Ma
Transconductance	8000 μmhos
Plate Resistance	0.125 Megohm
EC[1] for Gm = 100 μmhos (approx.)	−5 Volts

QUICK REFERENCE DATA

The Sylvania Type 7167 is a miniature, sharp cutoff tetrode intended for use in mobile communications equipment. Featuring a 13.5 volt heater, the 7167 is designed for dependable operation over the wide range of heater voltage encountered in this service.

Except for heater characteristics, the Type 7167 is similar to the 6CY5.

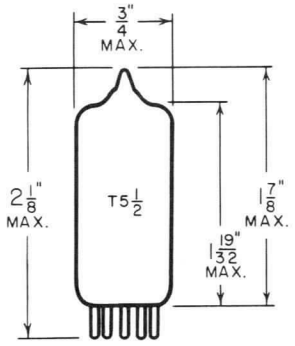

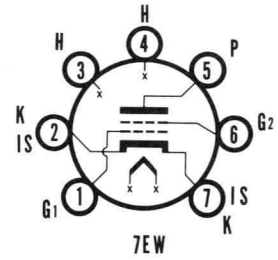

SYLVANIA
ELECTRONIC TUBES
A Division of
Sylvania Electric Products Inc.
RECEIVING TUBE
OPERATIONS
EMPORIUM, PA.

Prepared and Released By The
TECHNICAL PUBLICATIONS SECTION
EMPORIUM, PENNSYLVANIA

NOVEMBER, 1959

File Under
RECEIVING TUBES

SPECIAL TESTS

Heater Cycling Life Test
Ef = 17.0 V; 1 min. on, 4 min. off;
Ehk = –150 Vdc . . . . . 2000 Cycles Min.

NOTE:

1. Shield No. 316 connected to cathode.

AVERAGE PLATE CHARACTERISTICS

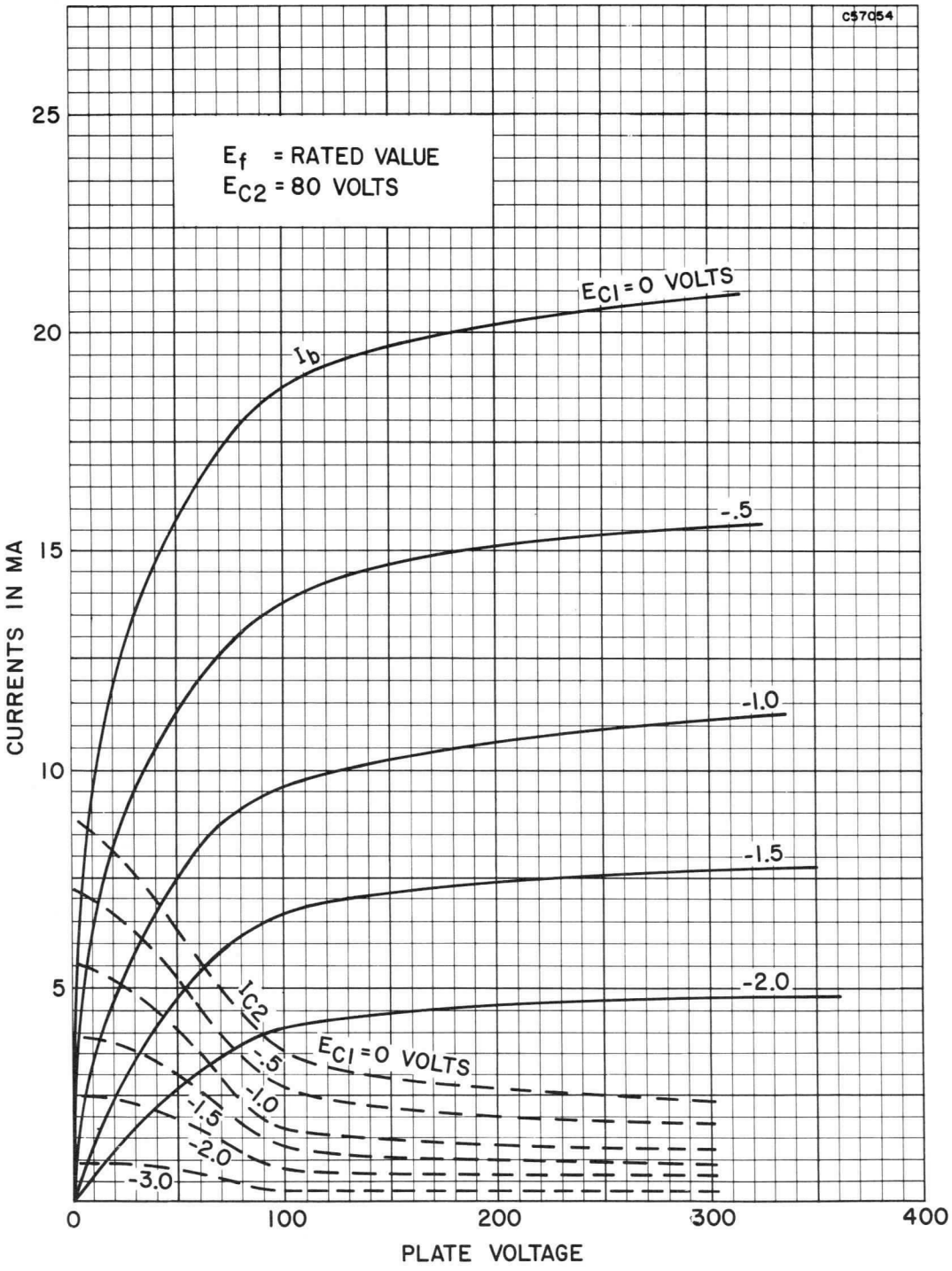

AVERAGE TRANSFER CHARACTERISTICS

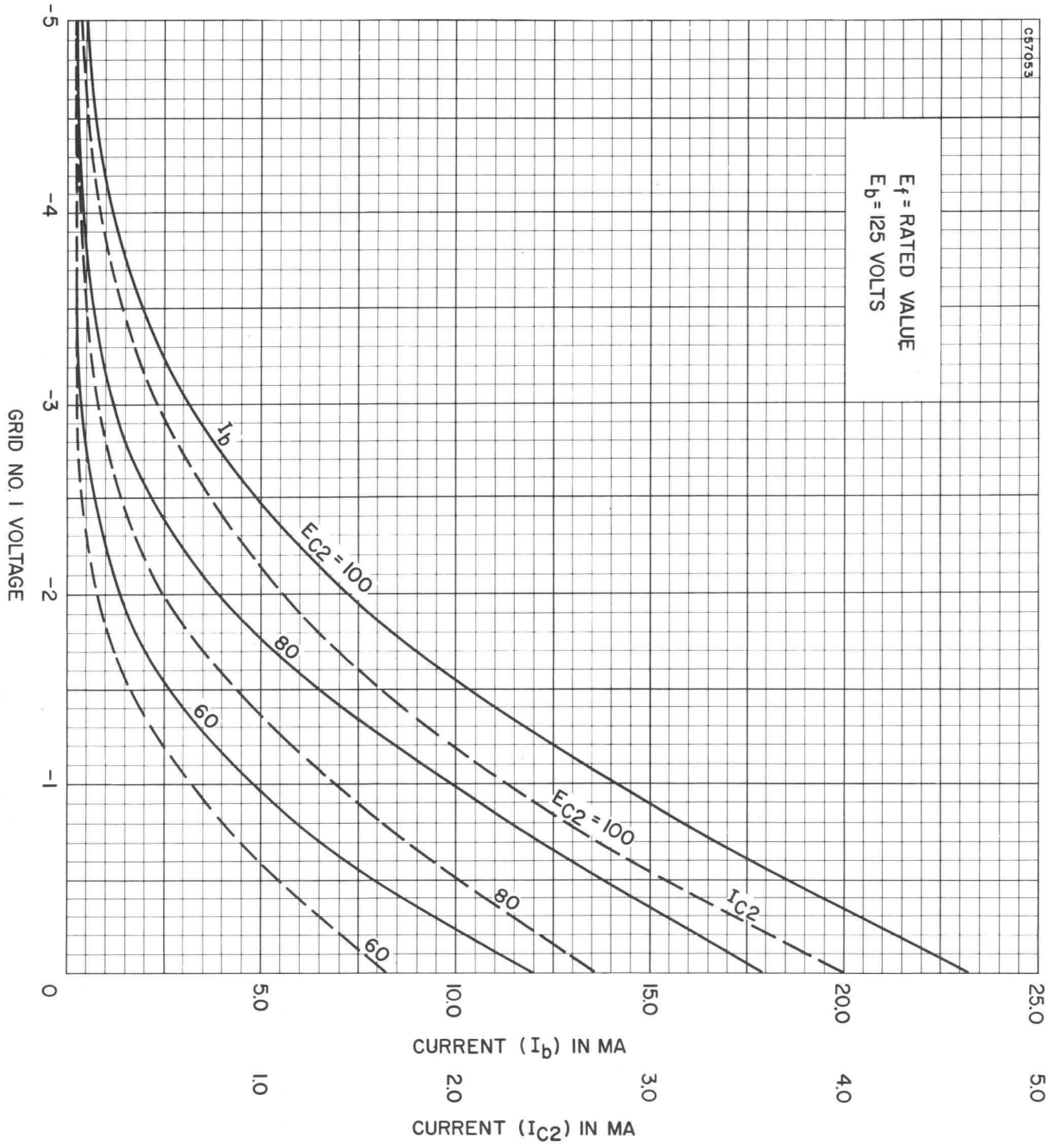

AVERAGE TRANSFER CHARACTERISTICS

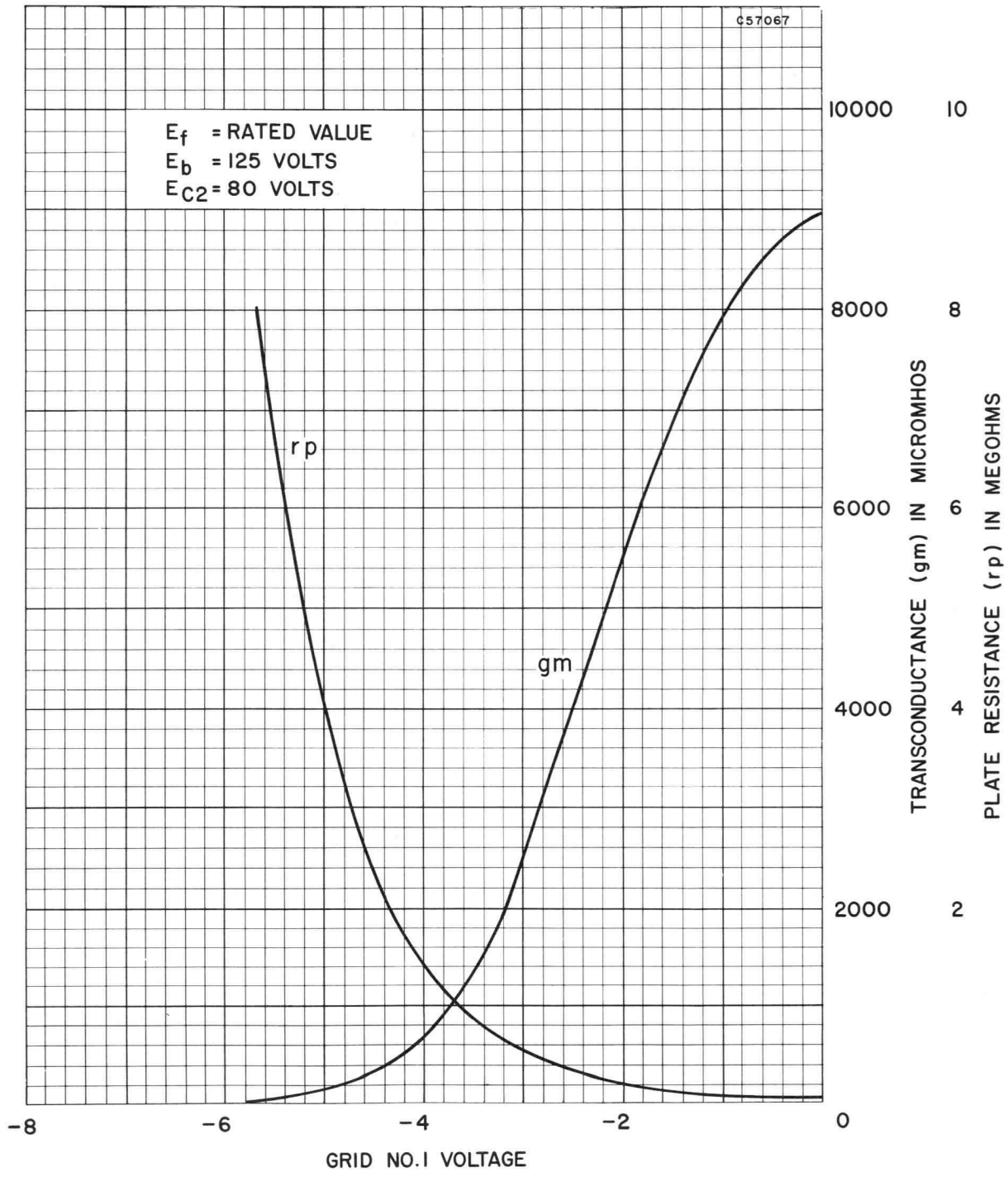

RATING CHART

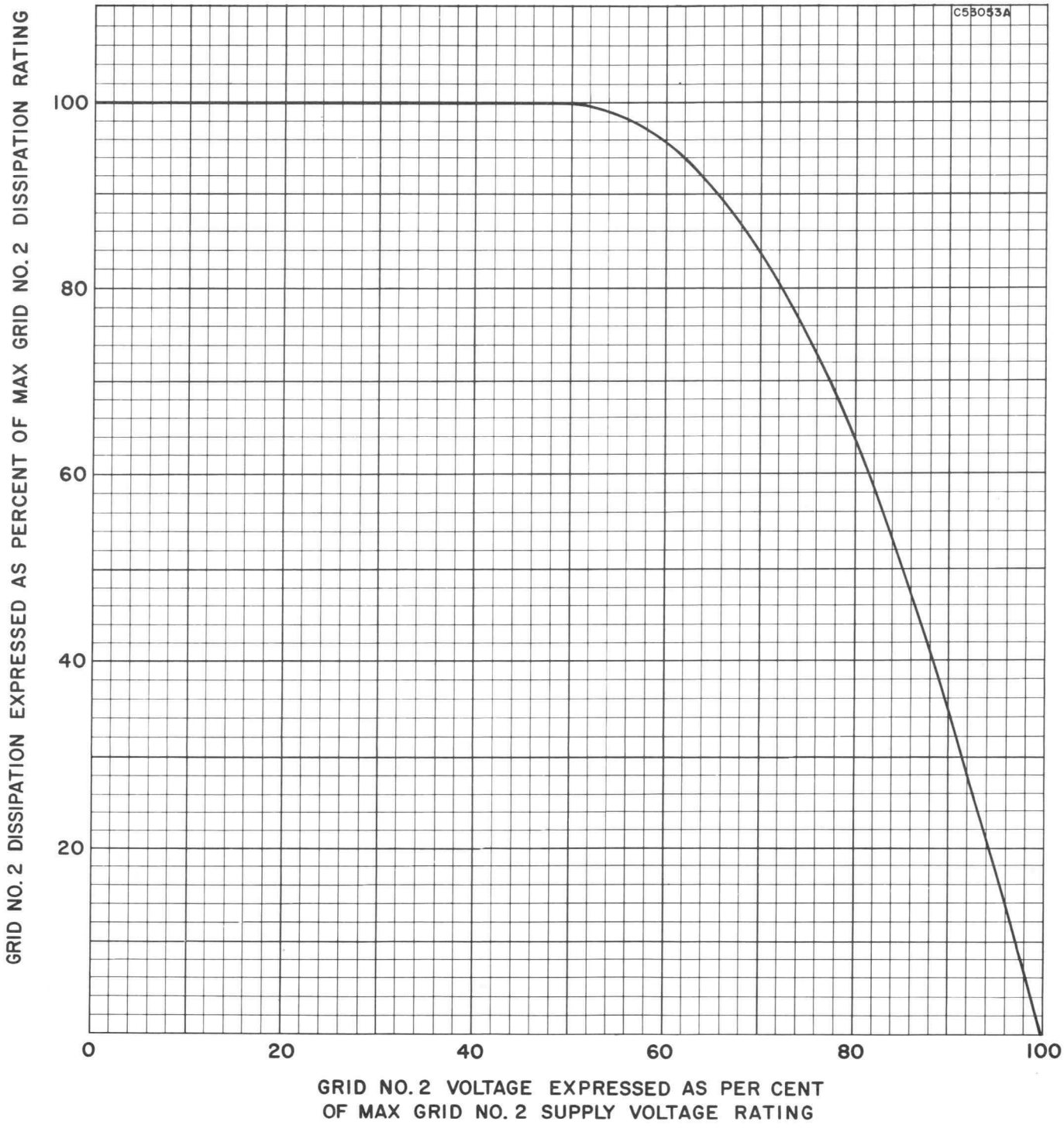

MECHANICAL DATA

Bulb	T-6½
Base	E9-1, Miniature Button 9-Pin
Outline	6-2
Basing	9JT
Cathode	Coated Unipotential
Mounting Position	Any

ELECTRICAL DATA

HEATER CHARACTERISTICS

Heater Voltage	6.3 Volts	
Heater Current	450 Ma	
Heater-Cathode Voltage (Design Maximum Values)[1]		
Heater Negative with Respect to Cathode		
Total DC and Peak	200 Volts	Max.
Heater Positive with Respect to Cathode		
DC	100 Volts	Max.
Total DC and Peak	200 Volts	Max.

DIRECT INTERELECTRODE CAPACITANCES (Unshielded)

Triode Section		
Grid to Plate	2.0 μμf	
Input: g to (h + k)	2.3 μμf	
Output: p to (h + k)	0.3 μμf	
Pentode Section		
Grid No. 1 to Plate	.06 μμf	Max.
Input: g1 to (h+k+g2+g3+Is)	5.0 μμf	
Output: p to (h+k+g2+g3+Is)	2.0 μμf	

RATINGS (Design Maximum Values)[1]

	Triode Section	Pentode Section	
Plate Voltage	330	330 Volts	Max.
Grid No. 2 Supply Voltage	—	330 Volts	Max.
Grid No. 2 Voltage	See Rating Chart		
Positive Grid No. 1 Voltage	0	0 Volts	Max.
Plate Dissipation	2.4	3.0 Watts	Max.
Grid No. 2 Dissipation	—	0.6 Watt	Max.
Grid Circuit Resistance			
Fixed Bias	0.5	0.25 Megohm	Max.
Cathode Bias	1.0	1.0 Megohm	Max.

CHARACTERISTICS AND TYPICAL OPERATION

	Triode Section	Pentode Section	
Plate Voltage	215	100	220 Volts
Grid No. 2 Voltage	—	50	130 Volts
Grid No. 1 Voltage	-8.5	—	— Volts
Cathode Bias Resistor	—	1000	62 Ohms

QUICK REFERENCE DATA

The Sylvania Type 7199 is a triode-pentode designed primarily for High Fidelity audio applications. The pentode section is particularly suited to preamplifier service while the triode section is intended for use as a phase inverter.

Type 7199 features exceptionally low hum and noise output.

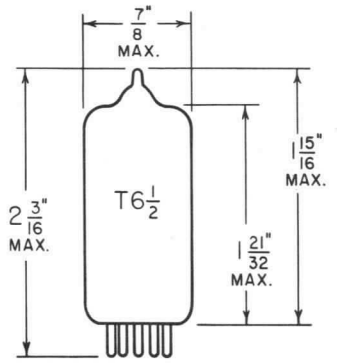

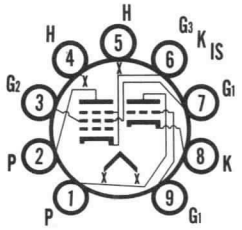

9JT

SYLVANIA
ELECTRONIC TUBES
A Division of
Sylvania Electric Products, Inc.
RECEIVING TUBE
OPERATIONS
EMPORIUM, PENNSYLVANIA

Prepared and Released By The
TECHNICAL PUBLICATIONS SECTION
EMPORIUM, PENNSYLVANIA

AUGUST, 1959

CHARACTERISTICS AND TYPICAL OPERATION (Cont'd)

	Triode Section	Pentode Section		
Plate Current	9.0	1.1	12.5	Ma
Grid No. 2 Current	—	0.35	3.5	Ma
Transconductance	2100	1500	7000	μmhos
Amplification Factor	17	—	—	
Plate Resistance	.0081	1.0	0.4	Megohms
Ec1 for Ib = 10 μa (Approx.)	–40	–4	—	Volts

EQUIVALENT NOISE AND HUM VOLTAGE (Referenced to Grid)

	Triode Section[2]	Pentode Section[3]	
Average Value	10	35	μVolts rms
Maximum Value	150	100	μVolts rms

NOTES:

1. *Design-Maximum Ratings are limiting values of operating and environmental conditions applicable to a bogey electron device of a specified type as defined by its published data, and should not be exceeded under the worst probable conditions.*

   The device manufacturer chooses these values to provide acceptable serviceability of the device, taking responsibility for the effects of changes in operating conditions due to variations in device characteristics.

   The equipment manufacturer should design so that initially and throughout life no design-maximum value for the intended service is exceeded with a bogey device under the worst probable operating conditions with respect to supply-voltage variation, equipment component variation, equipment control adjustment, load variation, signal variation, and environmental conditions.

2. *Measured under the following conditions: Ef = 6.3 Vac; center-tap of heater transformer grounded; Ebb = 250 Vdc; R_L = 0.1 Megohm; R_k = 1500 ohms; R_g = 50,000 ohms; F = 25 to 10,000 cps.*

3. *Measured under the following conditions: Ef = 6.3 Vac; Center-tap of heater transformer grounded; Ebb = 250 Vdc; R_L = 0.1 Megohm; Ecc2 = 250 Vdc; Rg2 = 330,000 ohms; Cg2 = 0.22 μf; Rk = 1200 ohms; Rg1 = 50,000 ohms; F = 25 to 10,000 cps.*

AVERAGE PLATE CHARACTERISTICS
(Triode Section)

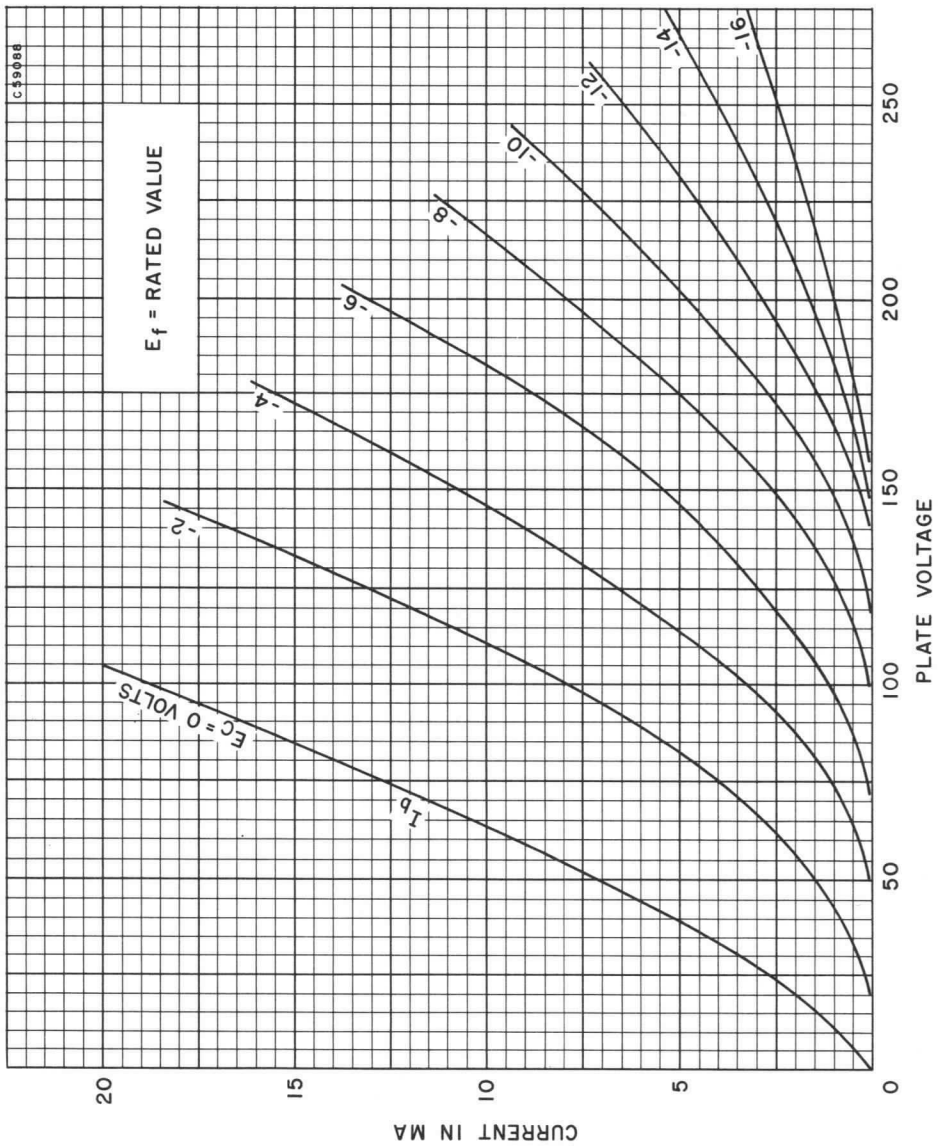

AVERAGE TRANSFER CHARACTERISTICS
(Triode Section)

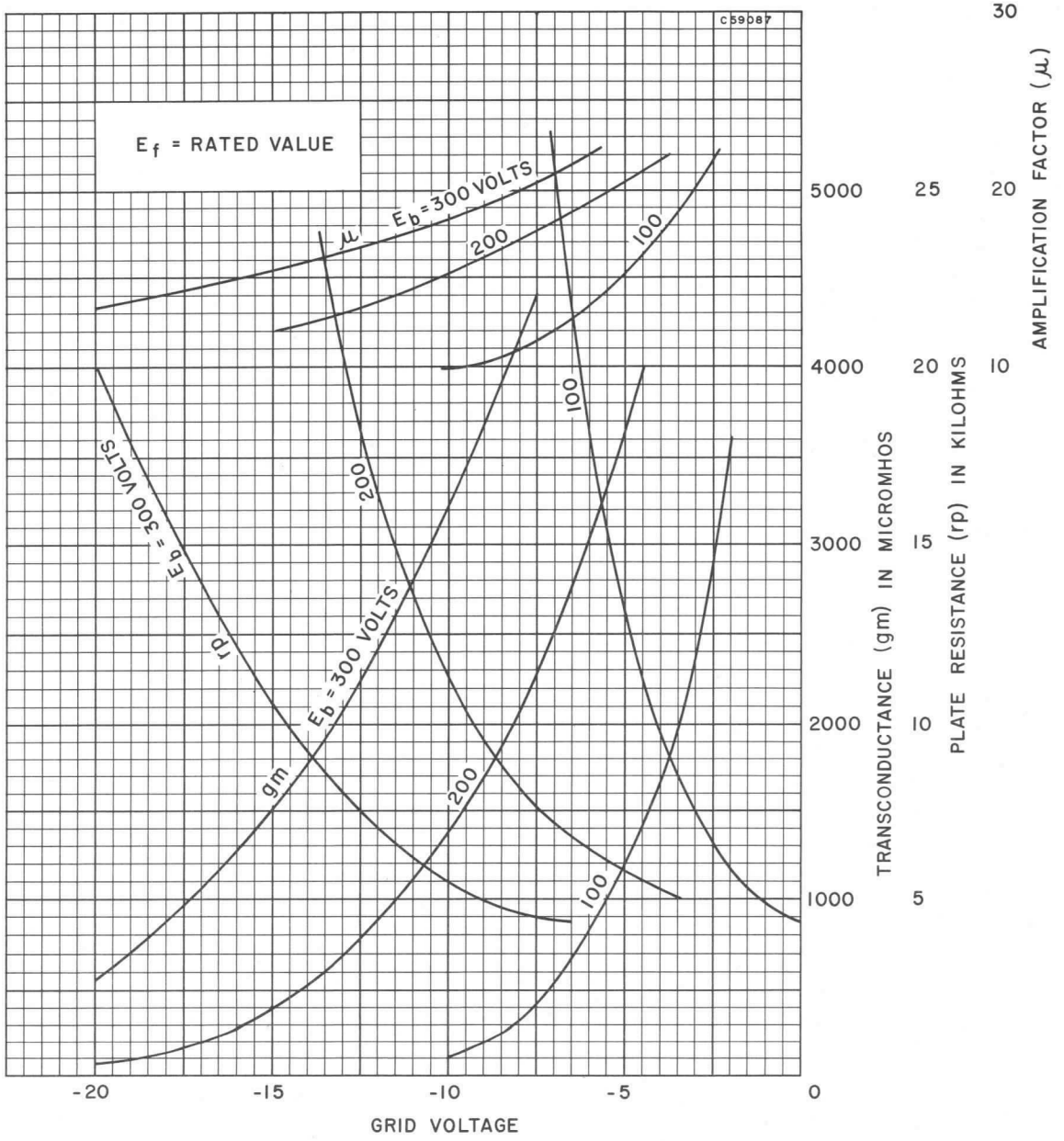

AVERAGE PLATE CHARACTERISTICS
(Pentode Section)

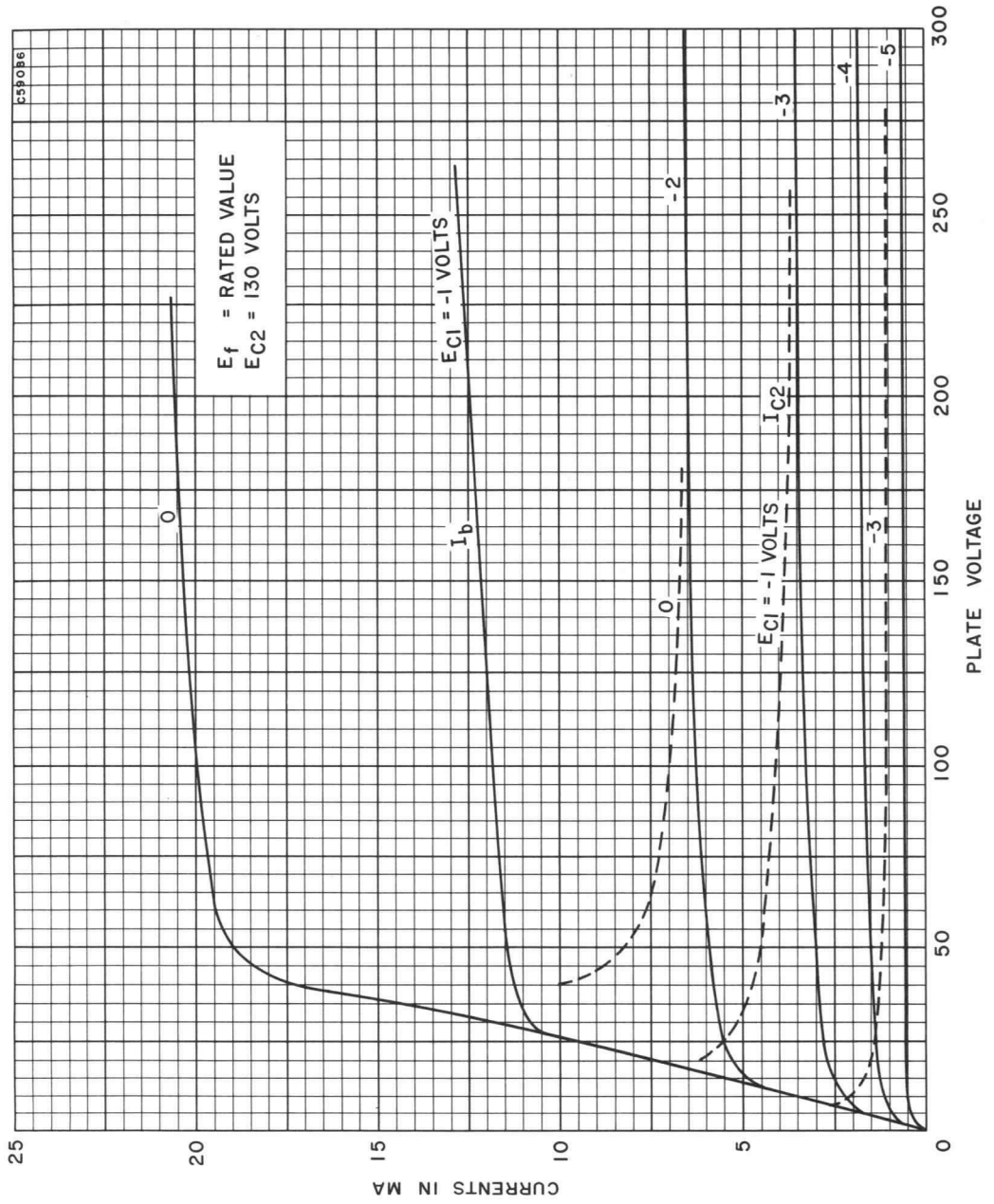

AVERAGE TRANSFER CHARACTERISTICS
(Pentode Section)

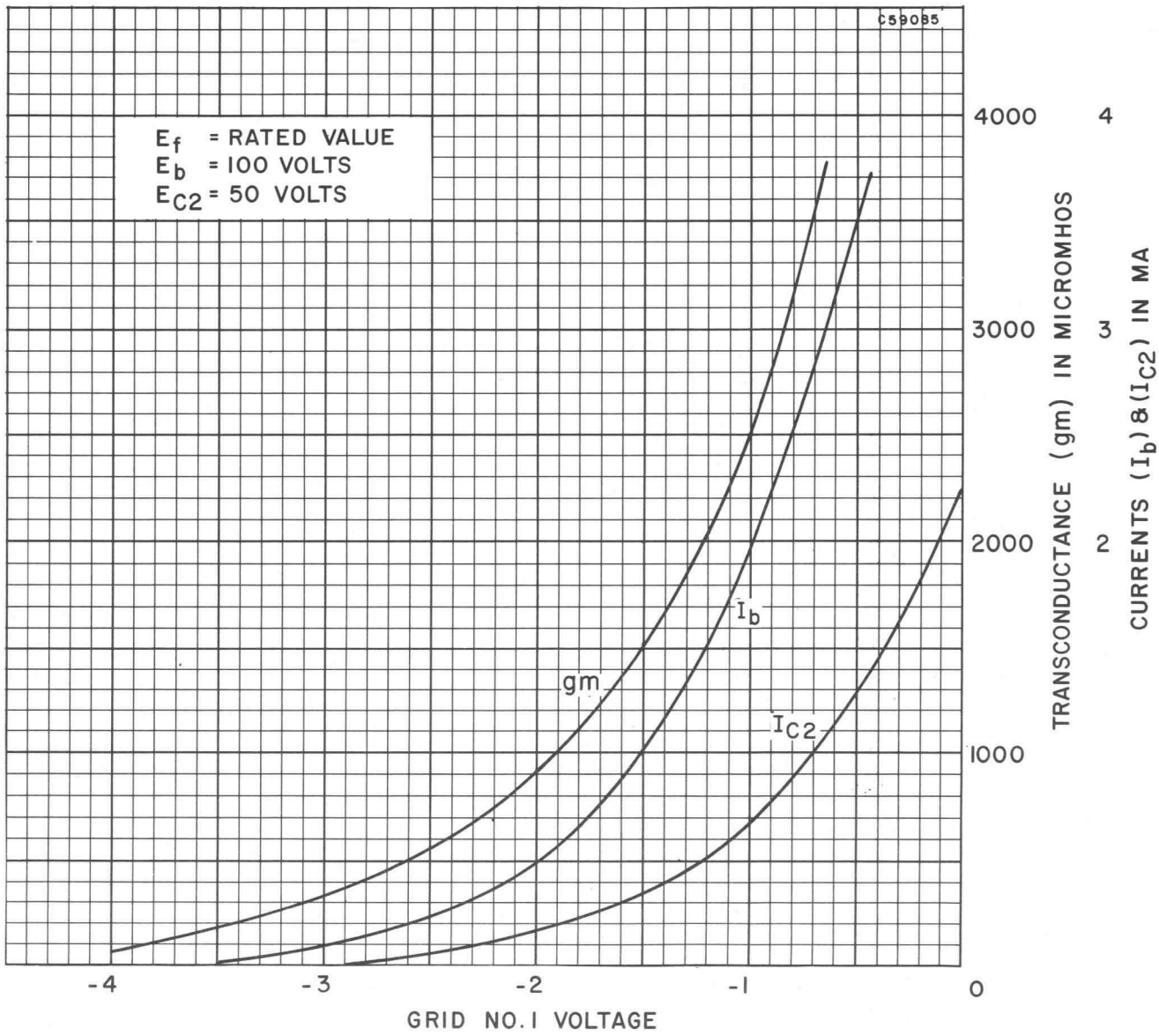

AVERAGE TRANSFER CHARACTERISTICS
(Pentode Section)

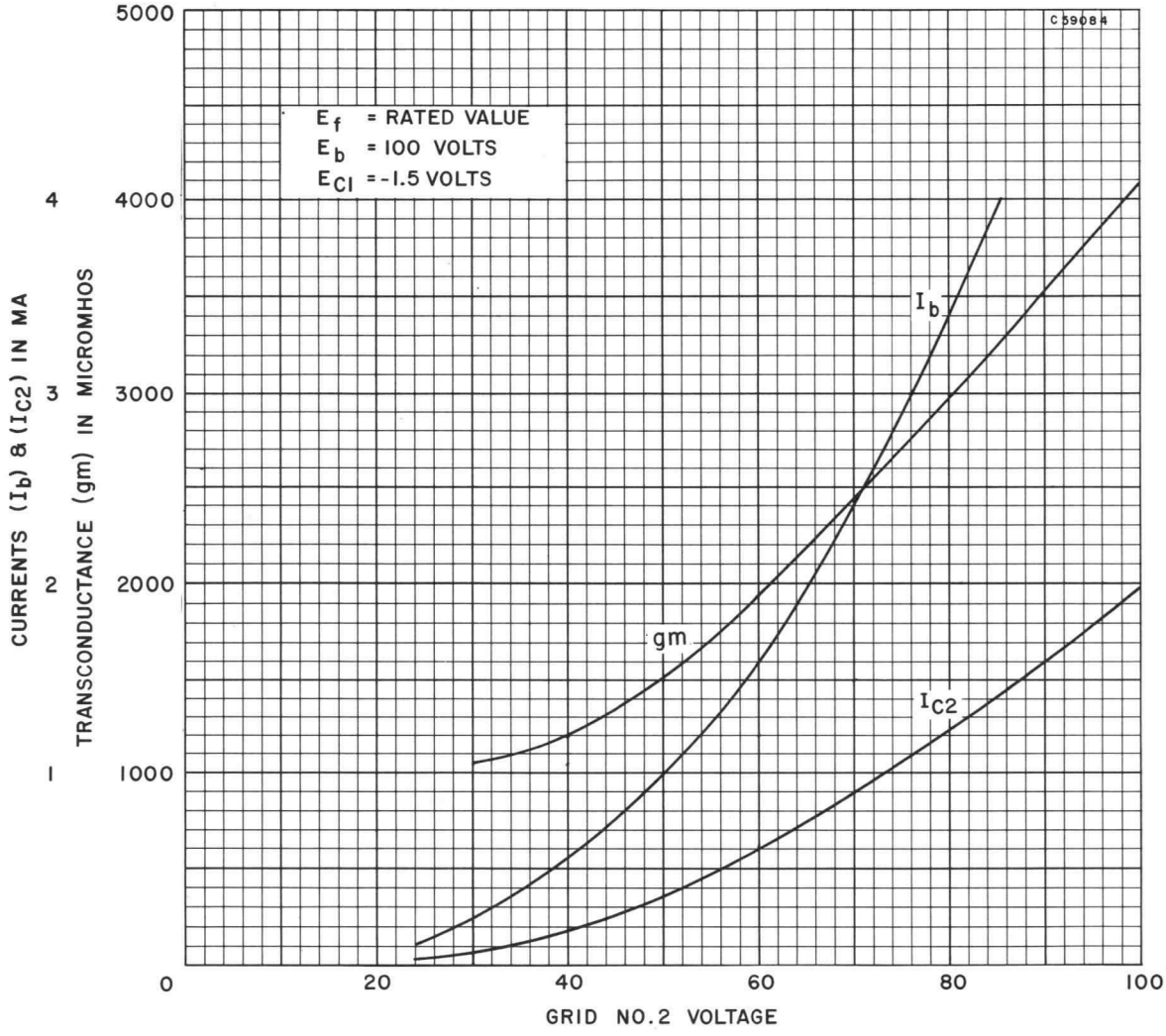

RATING CHART

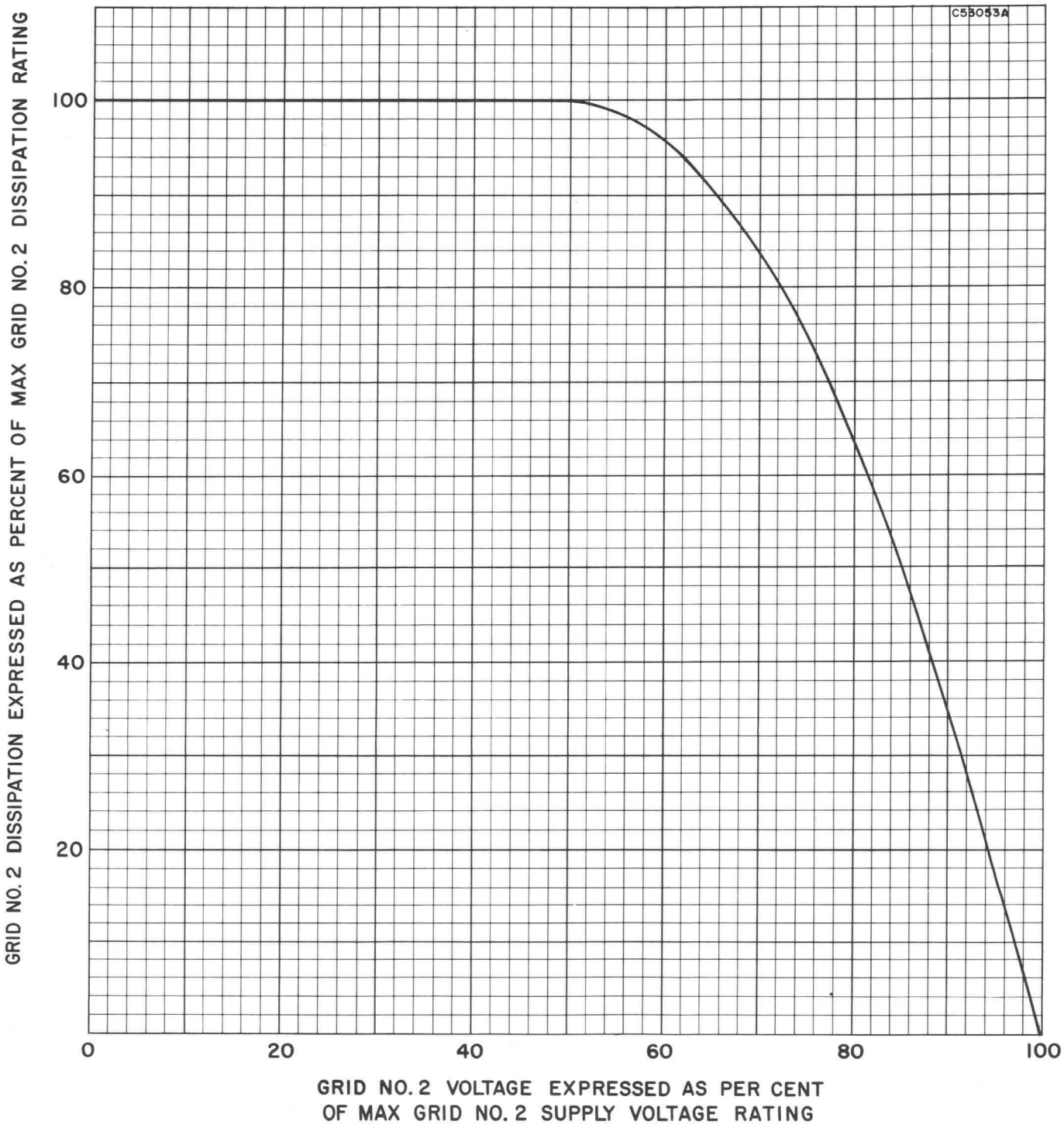

SYLVANIA

engineering data service

SYLVANIA
7258

MECHANICAL DATA

Bulb	T-6½
Base	E9-1, Miniature Button 9-Pin
Outline	6-2
Basing	9DA
Cathode	Coated Unipotential
Mounting Position	Any

ELECTRICAL DATA

HEATER CHARACTERISTICS

Heater Voltage Range	12-15 Volts
Heater Current at EF = 13.5 Volts	210 Ma
Heater-Cathode Voltage (Design Maximum Values)	
Heater Negative with Respect to Cathode	
Total DC and Peak	200 Volts Max.
Heater Positive with Respect to Cathode	
DC	100 Volts Max.
Total DC and Peak	200 Volts Max.

DIRECT INTERELECTRODE CAPACITANCES (Unshielded)

	Pentode Section	Triode Section
Grid No. 1 to Plate	0.4 Max.	1.5 μμf
Input	7.0	2.0 μμf
Output	2.4	0.26 μμf
Coupling:		
Triode Grid to Pentode Plate	.02	μμf Max.
Pentode Grid No. 1 to Triode Plate	.02	μμf Max.
Pentode Plate to Triode Plate	0.15	μμf Max.

RATINGS (Design Maximum Values)[1]

	Triode Section	Pentode Section	
Plate Voltage	330	330 Volts	Max.
Grid No. 2 Supply Voltage		330 Volts	Max.
Grid No. 2 Voltage	See Rating Chart		
Positive Grid No. 1 Voltage	0	0 Volts	Max.
Plate Dissipation	2.8	2.3 Watts	Max.
Grid No. 2 Dissipation		0.55 Watts	Max.
Grid No. 1 Circuit Resistance			
Fixed Bias	0.5	0.25 Meg.	Max.
Cathode Bias	1.0	1.0 Meg.	Max.

QUICK REFERENCE DATA

The Sylvania Type 7258 has a sharp cutoff pentode and medium mu triode contained in a miniature envelope. It is designed to operate over the wide range of heater voltages normally encountered in mobile applications. The pentode section may be used as an RF, IF or reactance tube. The triode section may be used as a low frequency oscillator or general purpose amplifier. Type 7258 is similar to Type 6AN8.

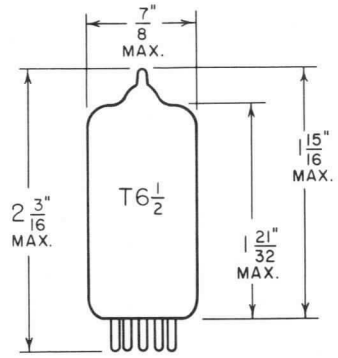

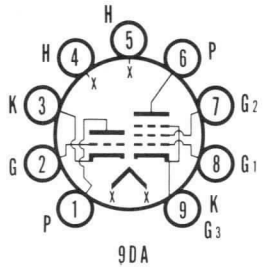

SYLVANIA ELECTRONIC TUBES
A Division of
SYLVANIA ELECTRIC PRODUCTS, Inc.
RECEIVING TUBE
OPERATIONS
EMPORIUM, PENNSYLVANIA

Prepared and Released By The
TECHNICAL PUBLICATIONS SECTION
EMPORIUM, PENNSYLVANIA

DECEMBER 1958

CHARACTERISTICS AND TYPICAL OPERATION

NOTES:

	Triode Section	Pentode Section
Plate Voltage	150	125 Volts
Grid No. 2 Voltage		125 Volts
Grid No. 1 Voltage	−3	Volts
Cathode Bias Resistor		56 Ohms
Plate Current	15	12 Ma
Grid No. 2 Current		3.8 Ma
Transconductance	4500	7800 μmhos
Amplification Factor	21	
Plate Resistance (Approx.)	4700	170,000 Ohms
Grid No. 1 Voltage for Ib = 20 μa (approx.)	−17	−6 Volts
Plate Current at Ec1 = −3 Vdc, RK = 0		1.6 Ma

1. *Design-Maximum Ratings are limiting values of operating and environmental conditions applicable to a bogey electron device of a specified type as defined by its published data, and should not be exceeded under the worst probable conditions.*

   The device manufacturer chooses these values to provide acceptable serviceability of the device, taking responsibility for the effects of changes in operating conditions due to variations in device characteristics.

   The equipment manufacturer should design so that initially and throughout life no design-maximum value for the intended service is exceeded with a bogey device under the worst probable operating conditions with respect to supply-voltage variation, equipment component variation, equipment control adjustment, load variation, signal variation, and environmental conditions.

AVERAGE PLATE CHARACTERISTICS
(TRIODE SECTION)

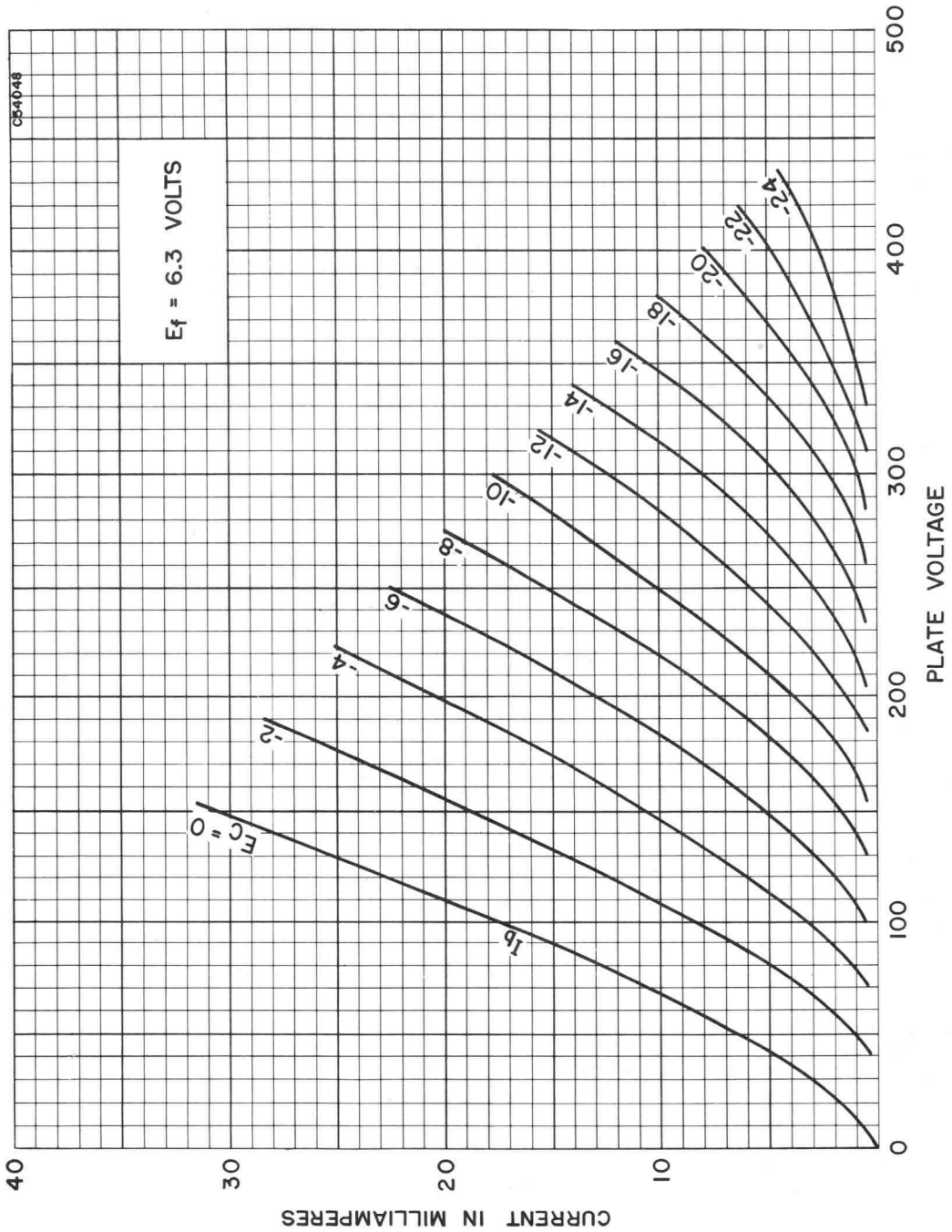

AVERAGE TRANSFER CHARACTERISTICS
(TRIODE SECTION)

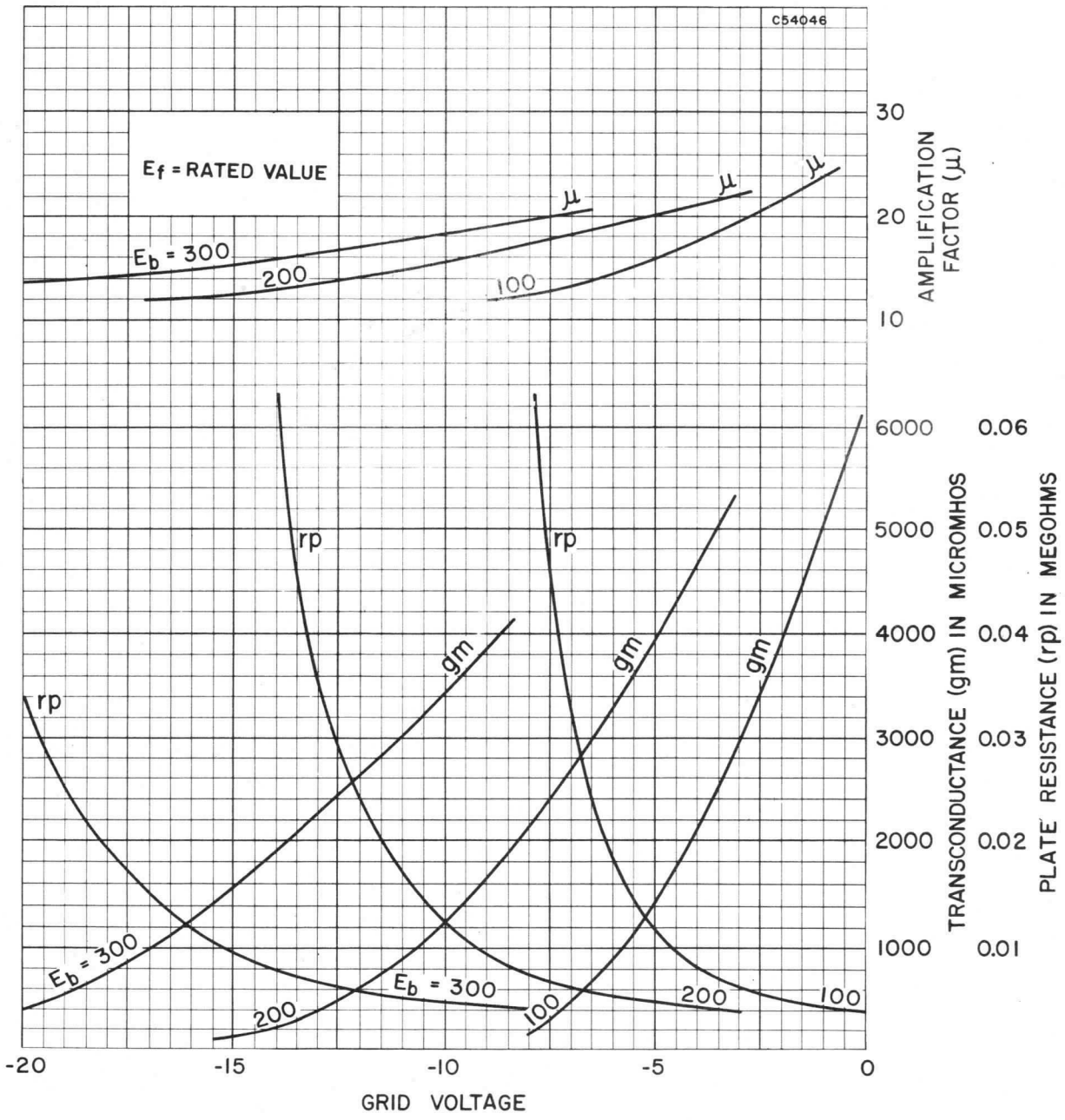

AVERAGE PLATE CHARACTERISTICS
(PENTODE SECTION)

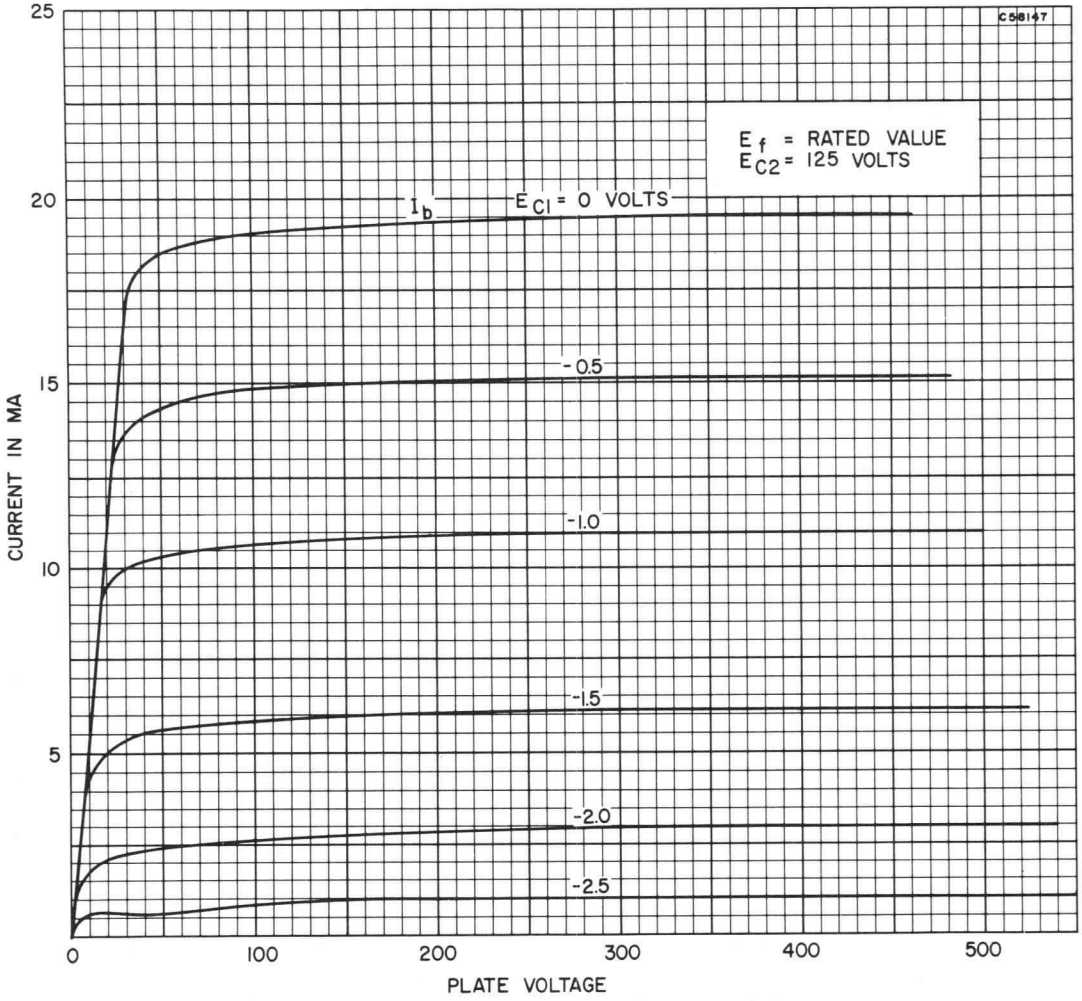

AVERAGE TRANSFER CHARACTERISTICS
(PENTODE SECTION)

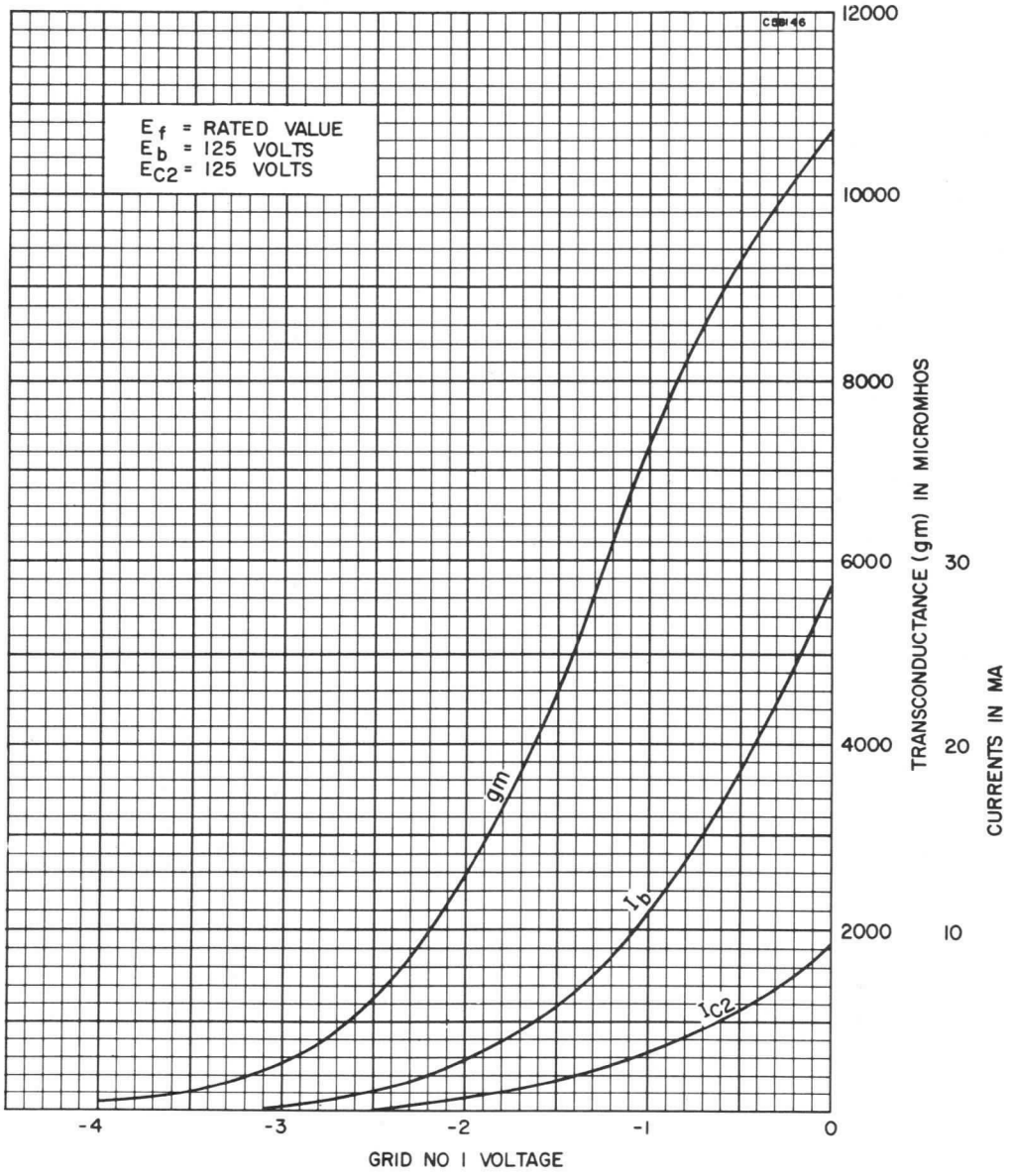

RATING CHART

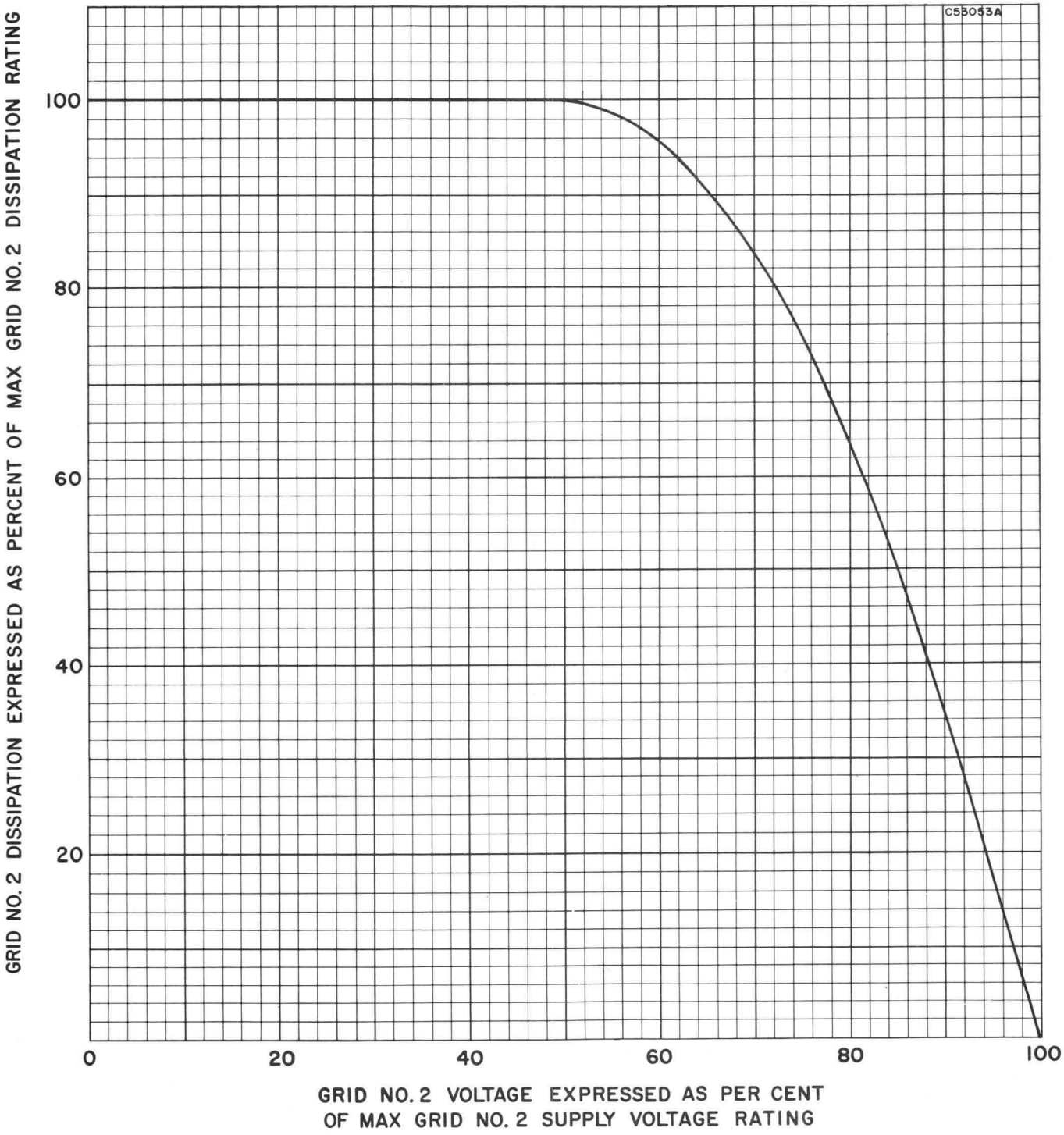

A Technical Publication of

SYLVANIA ELECTRIC
PRODUCTS INC.

EMPORIUM, PA.

MECHANICAL DATA

Bulb	T-6½
Base	E9-1, Miniature Button 9-Pin
Outline	6-2
Basing	9DE
Cathode	Coated Unipotential
Mounting Position	Any
Shock and Vibration	Note 1

ELECTRICAL DATA

HEATER CHARACTERISTICS

Heater Voltage	6.3 Volts
Heater Current	335 Ma
Maximum Heater-Cathode Voltage (Absolute Maximum Values)	
Heater Negative with Respect to Cathode	
Total DC and Peak	120 Volts
Heater Positive with Respect to Cathode	
Total DC and Peak	60 Volts

DIRECT INTERELECTRODE CAPACITANCES (Unshielded)

	Section 1	Section 2
Grid to Cathode + Heater	3.1	3.1 pf
Plate to Cathode + Heater	0.5	0.4 pf
Grid to Cathode + Heater + Shield	3.1	3.1 pf
Plate to Cathode + Heater + Shield	1.75	1.65 pf
Plate to Grid	1.4	1.4 pf
Plate to Cathode	0.18	0.18 pf
Plate to Shield	1.3	1.3 pf
Cathode to Heater	2.6	2.7 pf

	Between Sections
Plate to Plate	.045 pf
Grid to Grid	.005 pf
Plate to Grid (Either Section)	.005 pf
Grid to Cathode (Either Section)	.005 pf

Grounded Grid Operation

	Section 1	Section 2
Plate to Grid + Heater + Shield	3.0	2.9 pf
Cathode to Grid + Heater + Shield	6.0	6.0 pf

RATINGS (Absolute Maximum Values—Each Section)

Plate Voltage (Cold Cathode)	550 Volts
Plate Voltage (Ib = 0 Ma)	400 Volts
Plate Voltage	250 Volts
Plate Dissipation (Both Plates) Maximum	2.2 Watts
Plate Dissipation (Both Plates)	2.0 Watts
Plate Dissipation	1.65 Watts
Grid Dissipation	.03 Watts
Cathode Current	22 Ma
Peak Cathode Current[2]	110 Ma
Negative Grid Voltage	110 Volts
Peak Negative Grid Voltage[2]	200 Volts
Bulb Temperature	165 °C
Grid Circuit Resistance	
Fixed Bias	0.5 Megohm
Self Bias	1.0 Megohm

QUICK REFERENCE DATA

The Sylvania Type 7308 is a T-6½ duo triode designed for use as a multivibrator, cathode follower, VHF amplifier and VHF cascode amplifier.
Special features of the tube are: long life, ruggedized construction, high transconductance, and low noise and microphonics.
The Sylvania 7308 is a special quality twin triode similar to the Sylvania Type 6922.

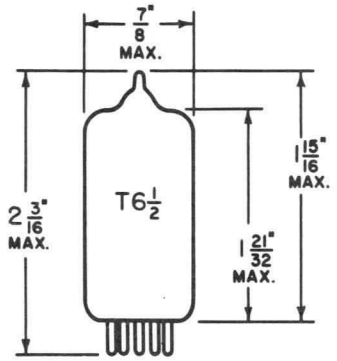

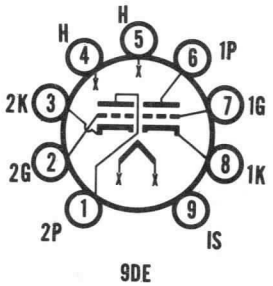

SYLVANIA
ELECTRONIC TUBES
A Division of
Sylvania Electric Products Inc.
RECEIVING TUBE
OPERATIONS
EMPORIUM, PA.
Prepared and Released By The
TECHNICAL PUBLICATIONS SECTION
EMPORIUM, PENNSYLVANIA
JUNE, 1963

File Under
RECEIVING TUBES

CHARACTERISTICS AND TYPICAL OPERATION

Plate Voltage	100[3]	90 Volts
Grid Voltage	+9	0 Volts
Plate Current	15	12 Ma
Cathode Resistor	680	120 Ohms
Transconductance	12,500	11,500 μmhos
Amplification Factor	33	—
Equivalent Noise Resistance[4]	250	— Ohms
Noise Factor[5]	4.6	— db
Input Damping (F = 100 mc/s)	3000	— Ohms

NOTES:

1. *A shock rating of about 500 g was obtained by using the NRL impact machine to deliver 5 blows to the tube at an angle of 30° in each of four different directions.*
   A fatigue rating of 2.5 g was obtained by applying vibrational forces for 32 hours in each of three directions at a frequency of 50 cps. These conditions are given for evaluation of mechanical ruggedness. They are not to be interpreted as suitable operating conditions.
2. *Pulse Duration, 200 μ sec. Max.; duty cycle 10 %.*
3. *Operation under conditions listed in this column is recommended because of the small spread in characteristics.*
4. *Measured at frequency = 45 mc/s.*
5. *Measured in a cascode circuit at frequency = 200 mc/s and matched for minimum noise.*

AVERAGE PLATE CHARACTERISTICS

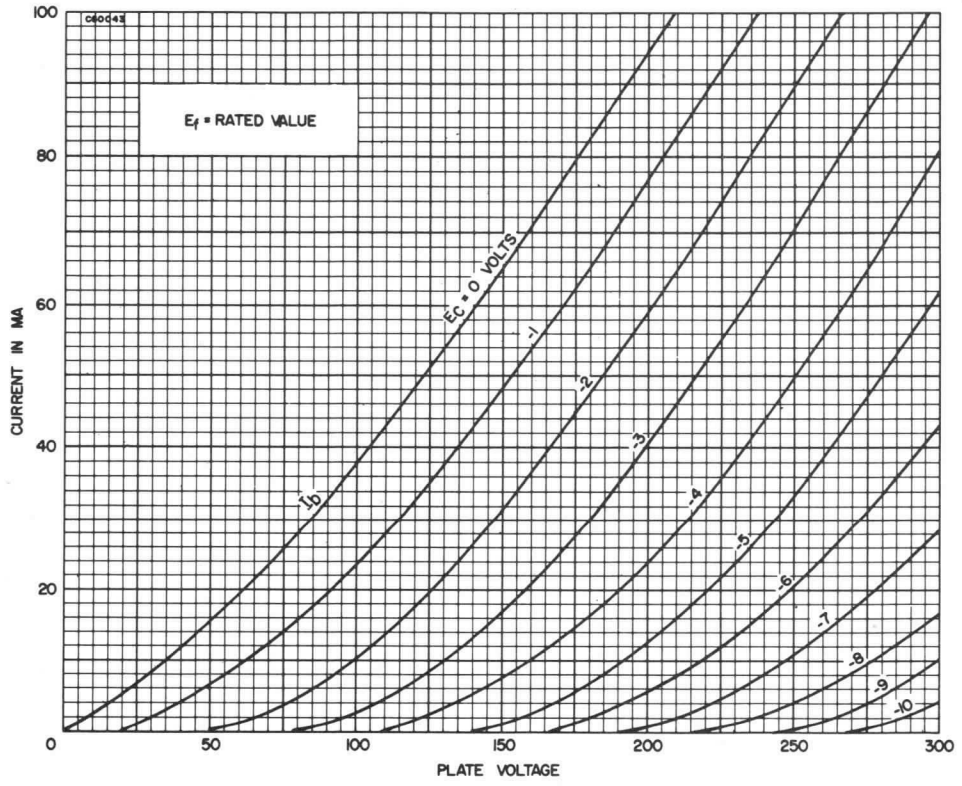

AVERAGE PLATE CHARACTERISTICS

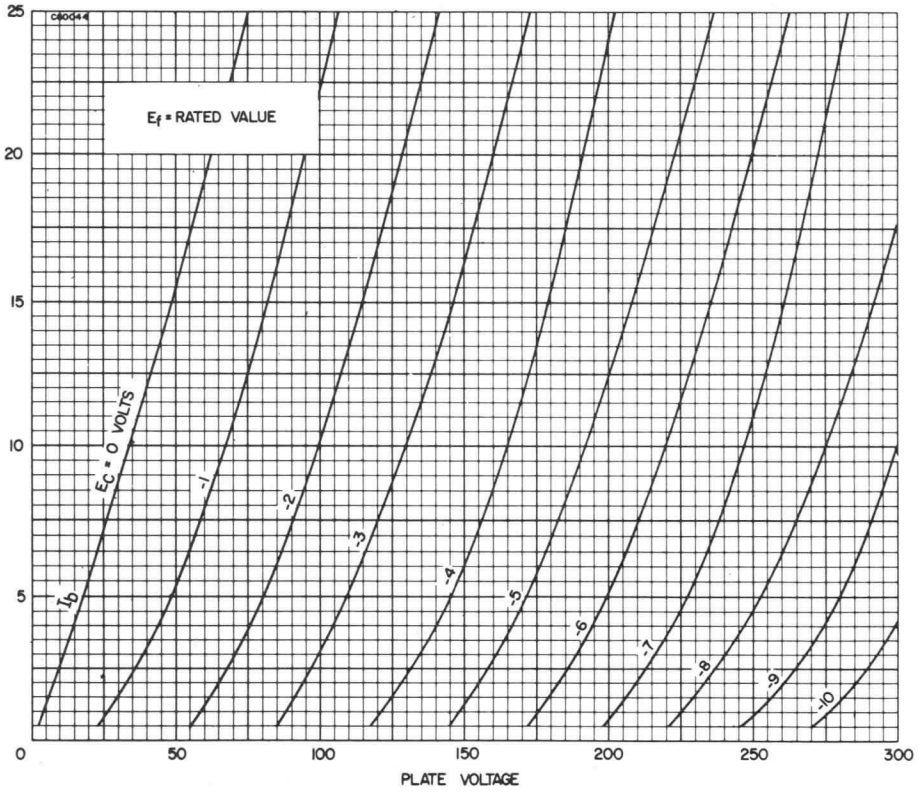

AVERAGE TRANSFER CHARACTERISTICS

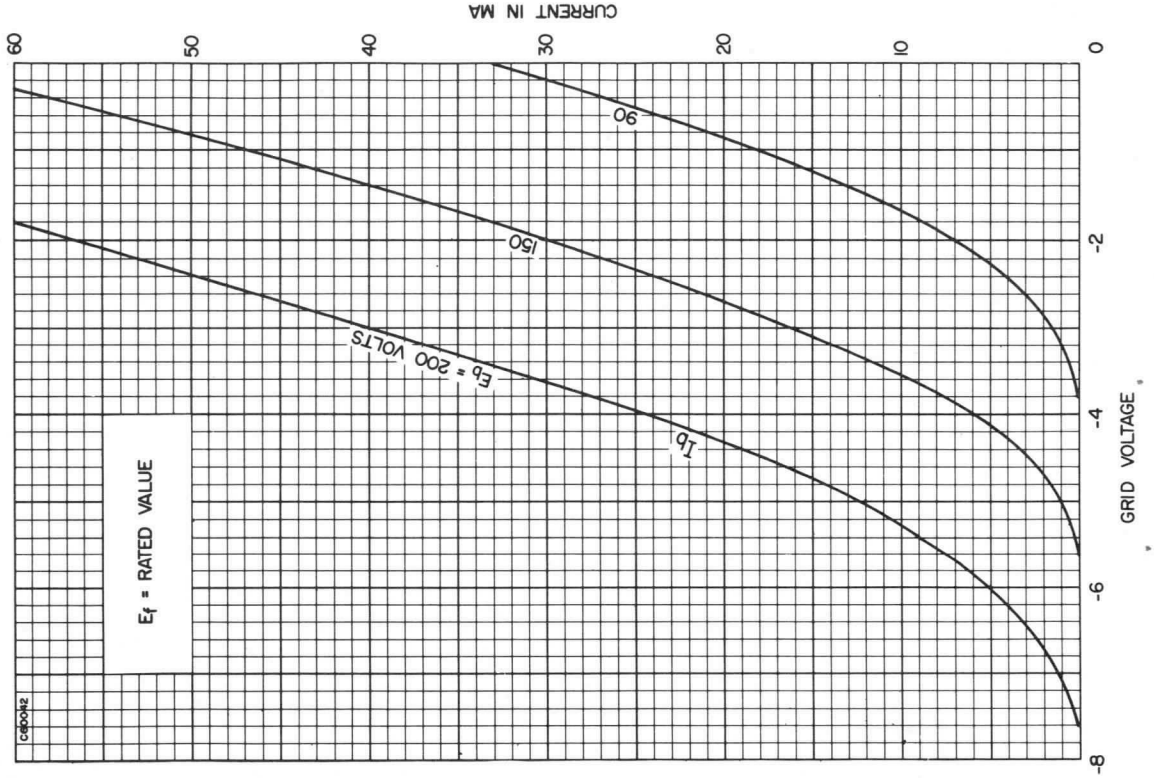

AVERAGE TRANSFER CHARACTERISTICS

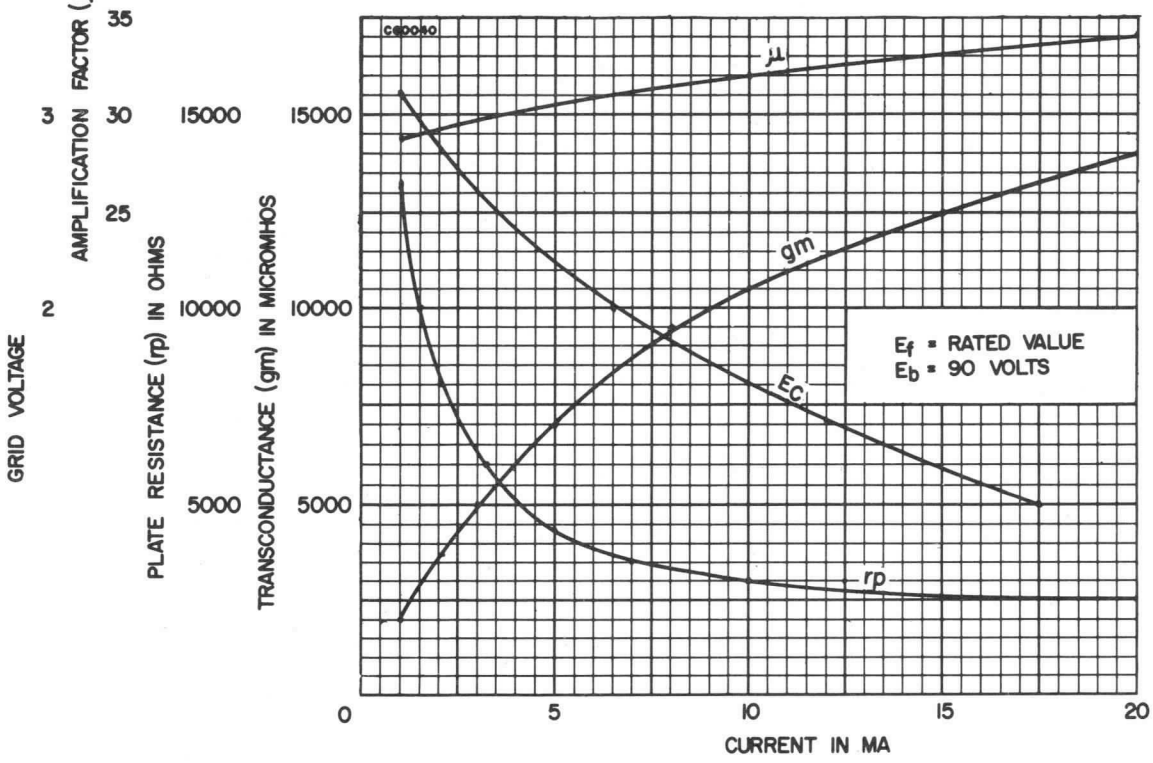

AVERAGE TRANSFER CHARACTERISTICS

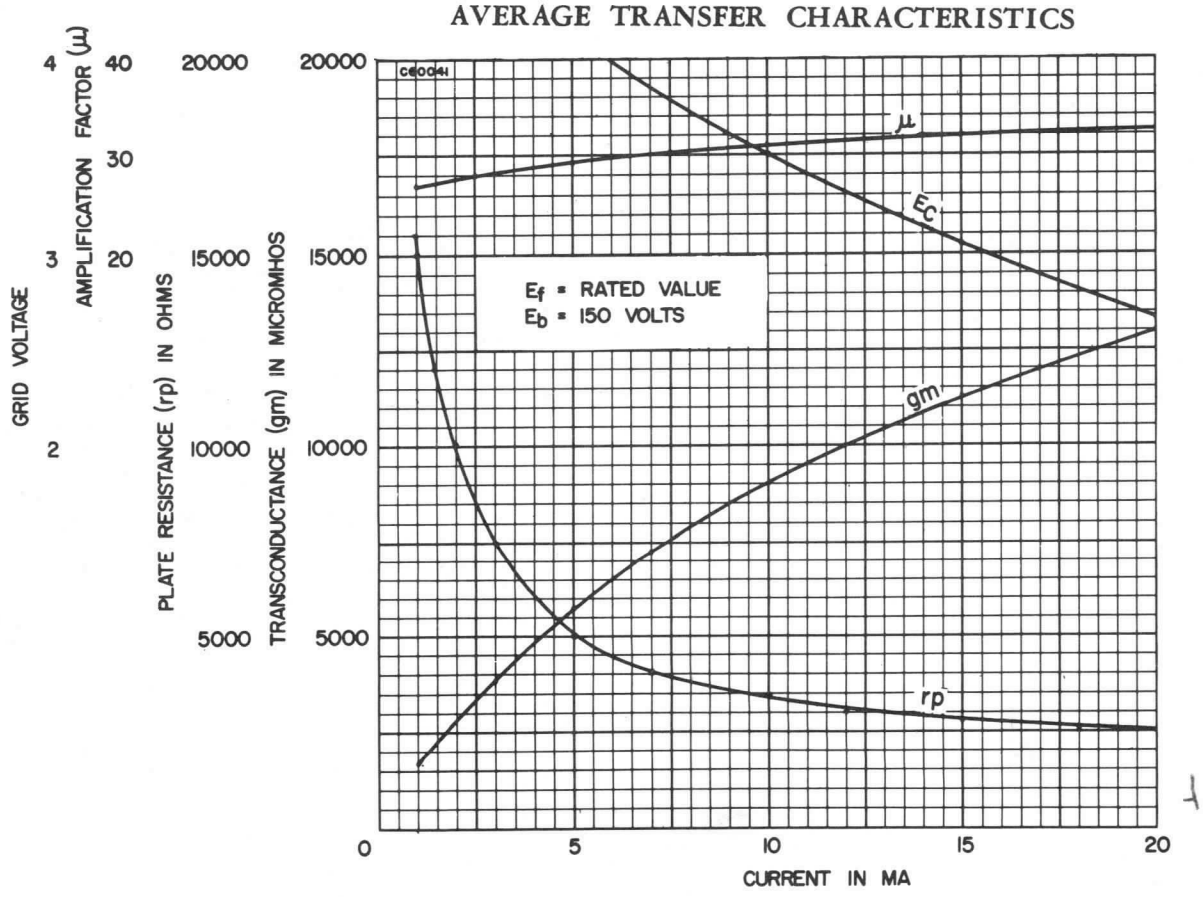

HUM CRITERIA

The hum level at the plate averages 1.2 millivolts when used as a normal voltage amplifier with a stage gain of 340 and the 6.3 Vac heater supply balanced to ground for minimum hum.

The stage gain of 340 is obtained with a supply voltage of 250 volts, a plate resistor of 270,000 ohms, a grid No. 2 resistor of 680,000, a grid No. 1 resistor of 100,000 ohms, a cathode resistor (bypassed) of 1,000 ohms and a following stage loading resistor of 10 megohms. (Loading resistance of VTVM.)

By utilizing the R-C data specified, removal of the cathode bypass condenser will reduce the hum level at the plate to 0.9 millivolts and the stage gain to 110.

MECHANICAL DATA

Bulb	T-5½
Base	E7-1, Miniature Button 7-Pin
Outline	5-2
Basing	7BK
Cathode	Coated Unipotential
Mounting Position	Any

ELECTRICAL DATA

HEATER CHARACTERISTICS

Heater Voltage	6.3 Volts	
Heater Current	300 Ma	
Heater-Cathode Voltage (Design-Center Values)		
Heater Negative with Respect to Cathode		
Total DC and Peak	200 Volts	Max.
Heater Positive with Respect to Cathode		
DC	100 Volts	Max.
Total DC and Peak	200 Volts	Max.

DIRECT INTERELECTRODE CAPACITANCES

	Shielded[1]	Unshielded	
Pentode Connection			
Grid No. 1 to Plate	.0035	.0035 μμf	Max.
Input: gl to (h+k+g²+g³+I.S.)	5.5	5.5 μμf	
Output: p to (h+k+g²+g³+I.S.)	5.0	50. μμf	
Triode Connection[2]			
Grid to Plate: gl to (p+g²+g³+I.S.)	2.6	2.6 μμf	
Input: gl to (h+k)	3.2	3.2 μμf	
Output: p+g²+g³+I.S. to (h+k)	8.5	1.2 μμf	

RATINGS (Design-Center Values)

	Triode Conn.[2]	Pentode Conn.	
Plate Voltage	250	300 Volts	Max.
Grid No. 2 Supply Voltage		300 Volts	Max.
Grid No. 2 Voltage		See Rating Chart	
Plate Dissipation	3.2	3.0 Watts	Max.
Grid No. 2 Dissipation		0.65 Watts	Max.
Positive Grid No. 1 Voltage	0	0 Volts	Max.

QUICK REFERENCE DATA

The Sylvania Type 7543 is designed to provide low hum, non-microphonic operation through the incorporation of a helical wound heater and rigid mounting of the internal components.

The 7543 is otherwise similar to, and a replacement for, the Type 6AU6.

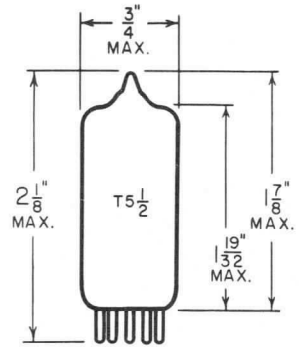

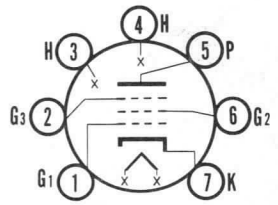

7BK

SYLVANIA
ELECTRONIC TUBES
A Division of
Sylvania Electric Products Inc.
RECEIVING TUBE
OPERATIONS
EMPORIUM, PA.

Prepared and Released By The
TECHNICAL PUBLICATIONS SECTION
EMPORIUM, PENNSYLVANIA

APRIL, 1960

File Under
RECEIVING TUBES

CHARACTERISTICS AND TYPICAL OPERATION

	Triode Connected[2]	Pentode Connected		
Plate Voltage	250	100	250	250 Volts
Grid No. 3 Voltage		Connected to Cathode at Socket		
Grid No. 2 Voltage		100	125	150 Volts
Cathode Bias Resistor	330	150	100	68 Ohms
Plate Current	12.2	5.0	7.6	10.6 Ma
Grid No. 2 Current		2.1	3.0	4.3 Ma
Transconductance	4800	3900	4500	5200 μmhos
Amplification Factor	36			
Plate Resistance (Approx.)		0.5	1.5	1.0 Megohms
Ecl for Ib = 10 μa (Approx.)		–4.2	–5.5	–6.5 Volts

NOTES:

1. *Shield No. 316 connected to Cathode Pin No. 7.*
2. *When operated as a triode Grid No. 2 and Grid No. 3 should be tied to the plate.*

AVERAGE PLATE CHARACTERISTICS
(Triode Connected)

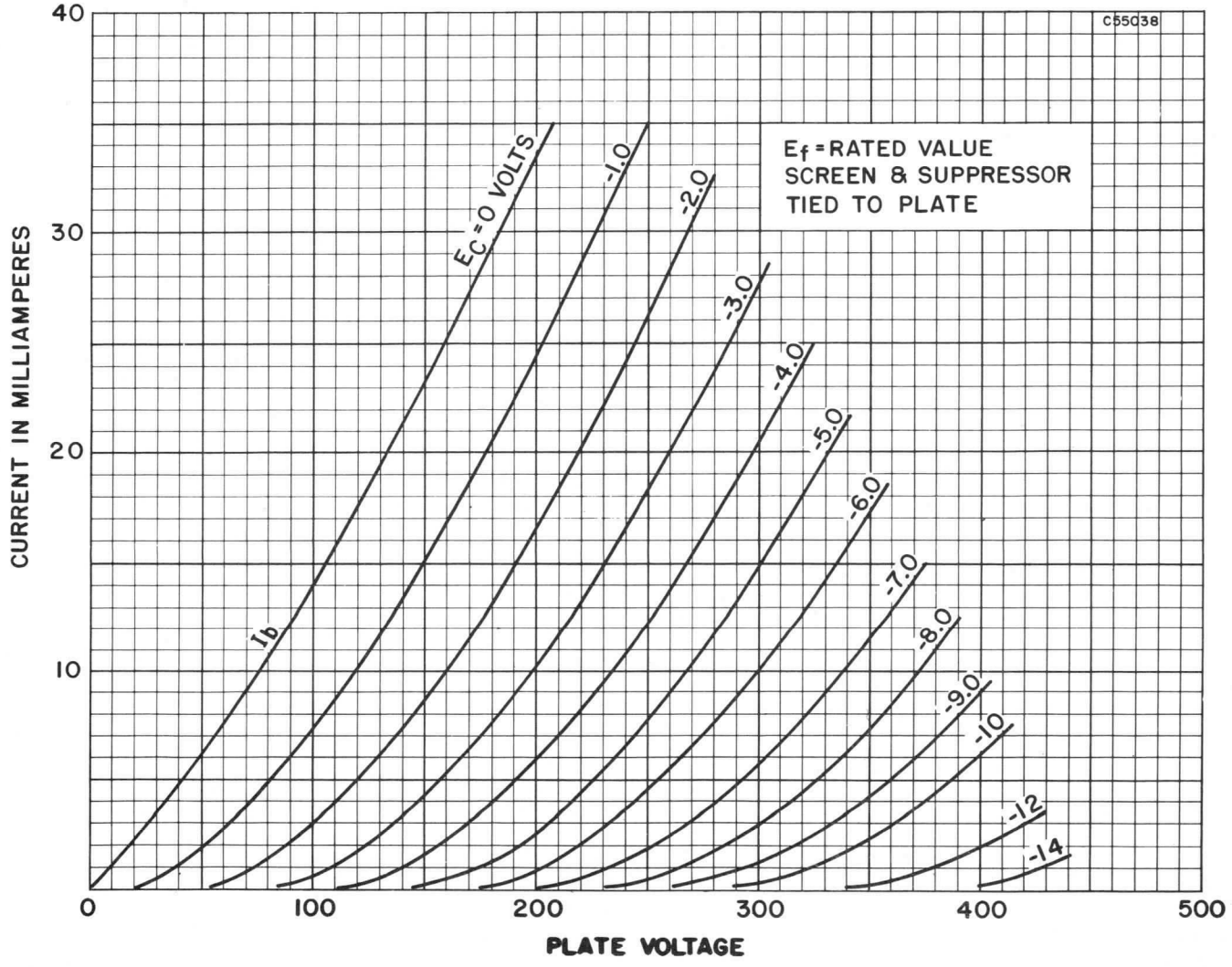

AVERAGE PLATE CHARACTERISTICS

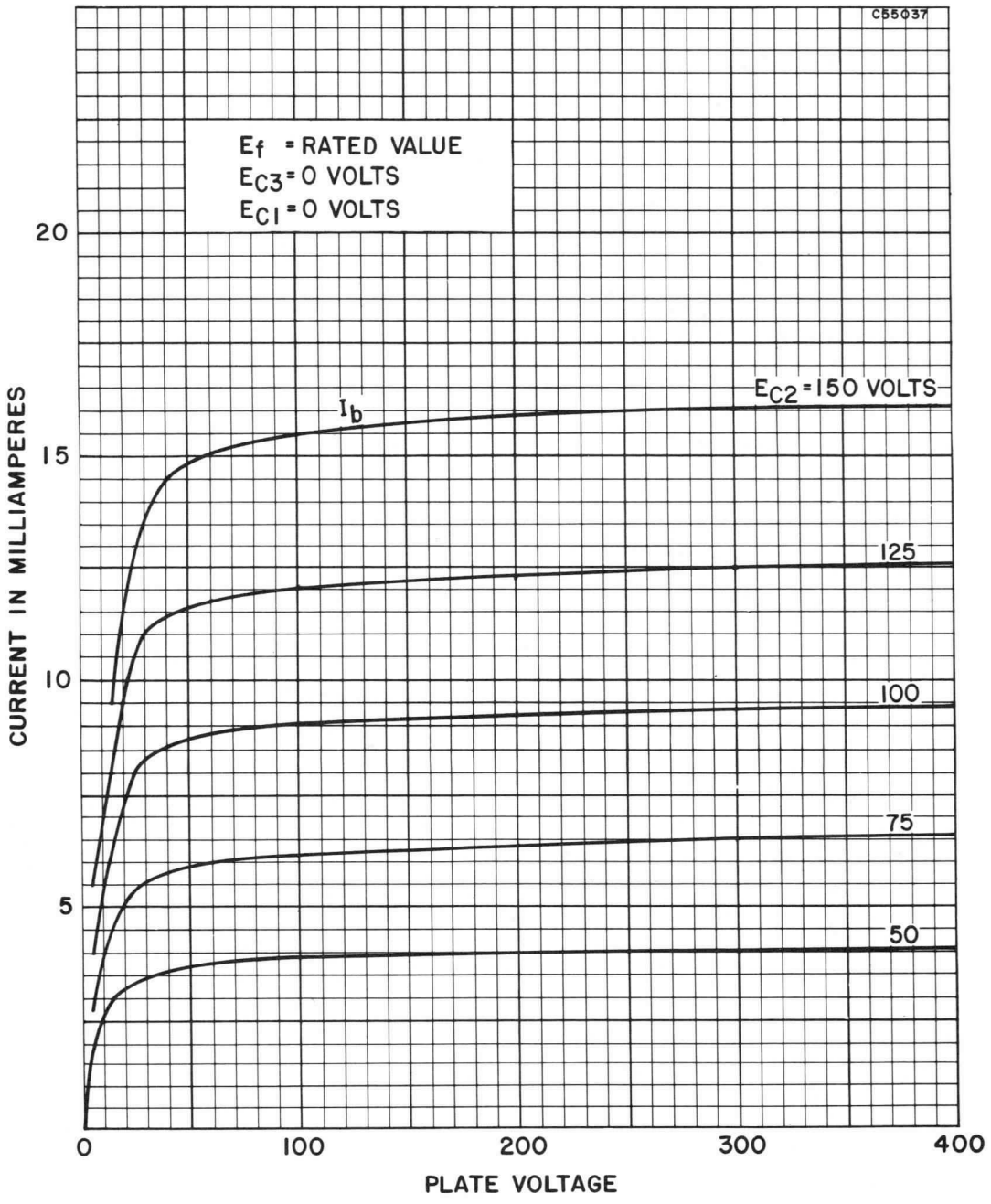

AVERAGE PLATE CHARACTERISTICS

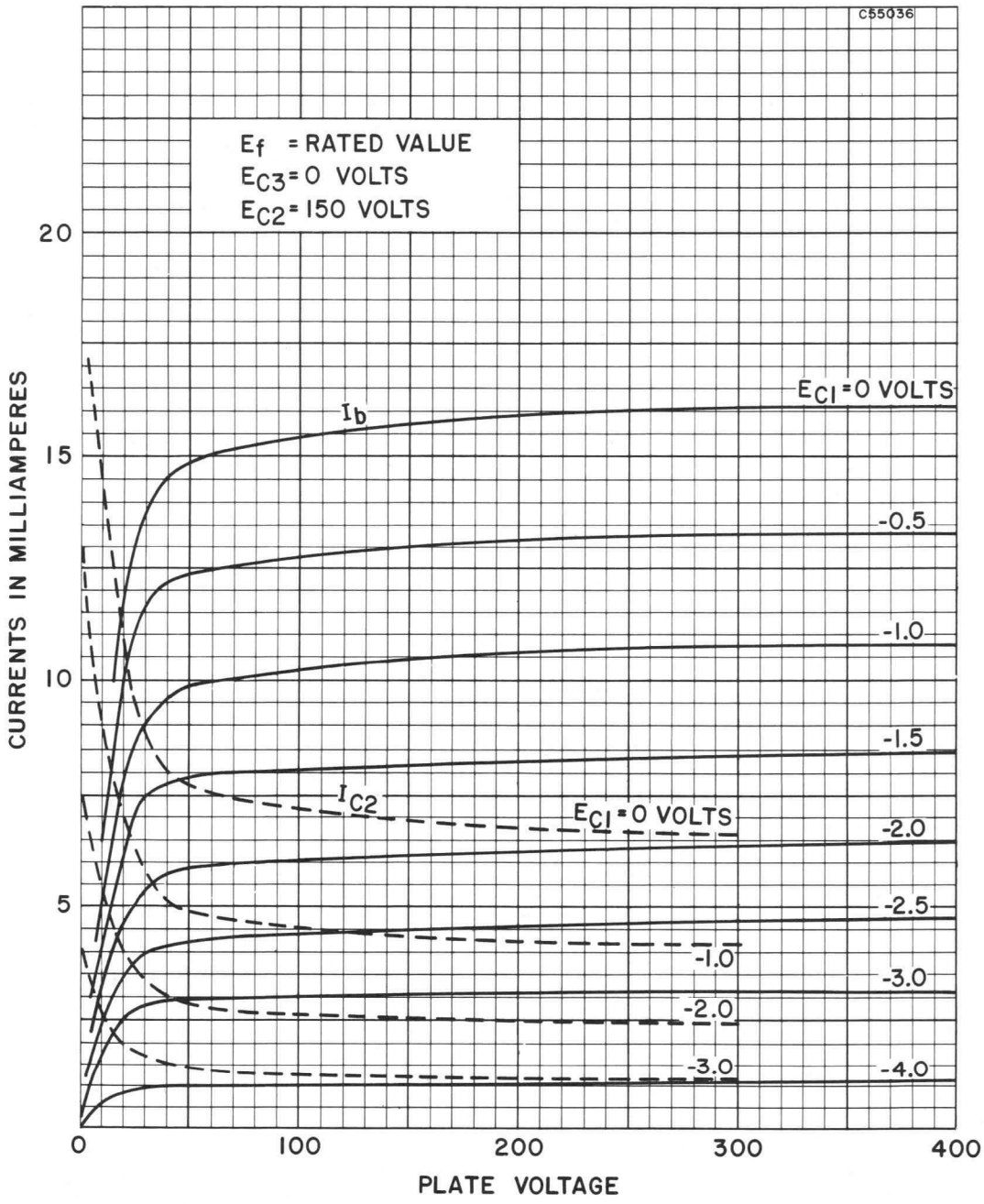

AVERAGE TRANSFER CHARACTERISTICS

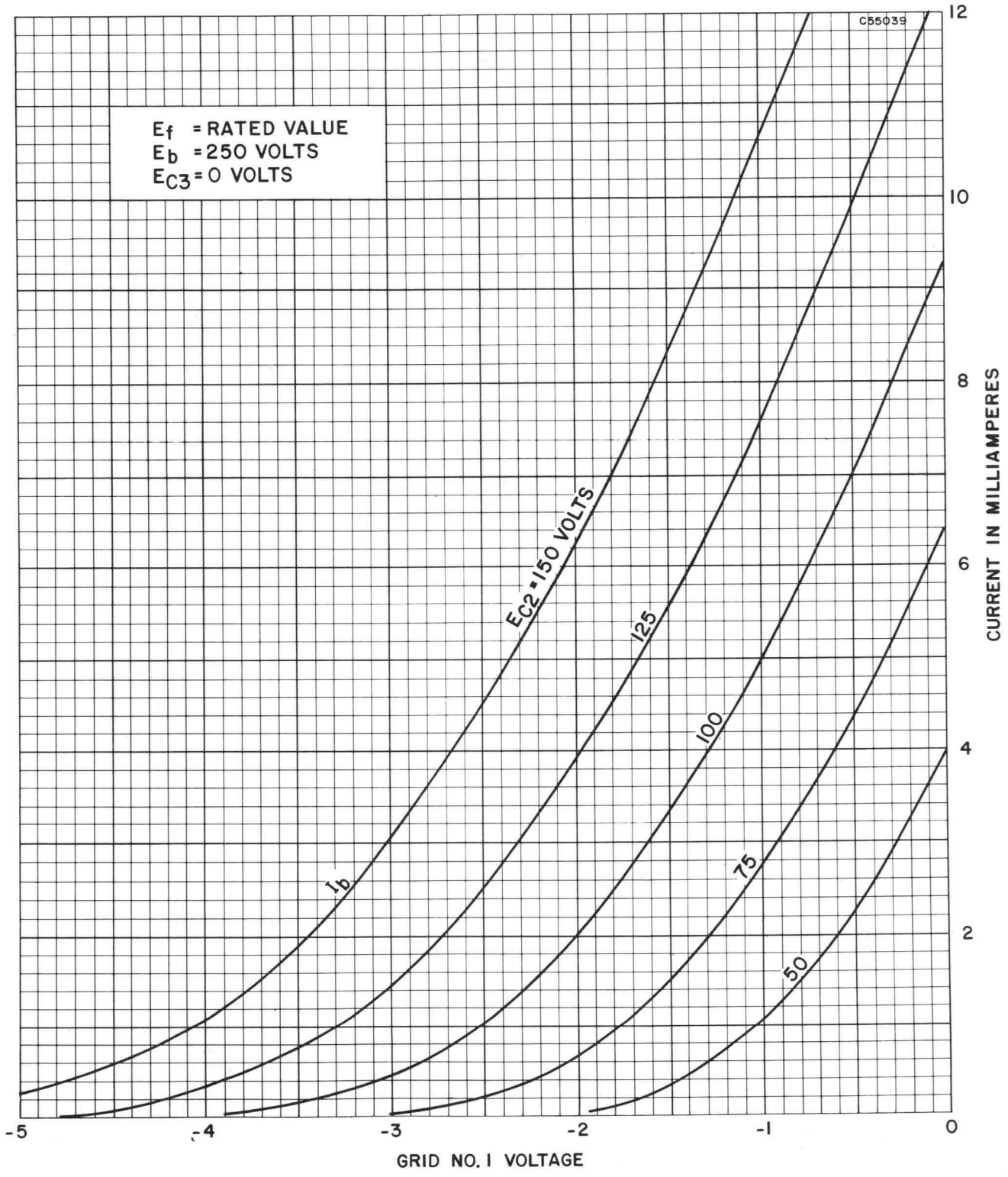

AVERAGE TRANSFER CHARACTERISTICS

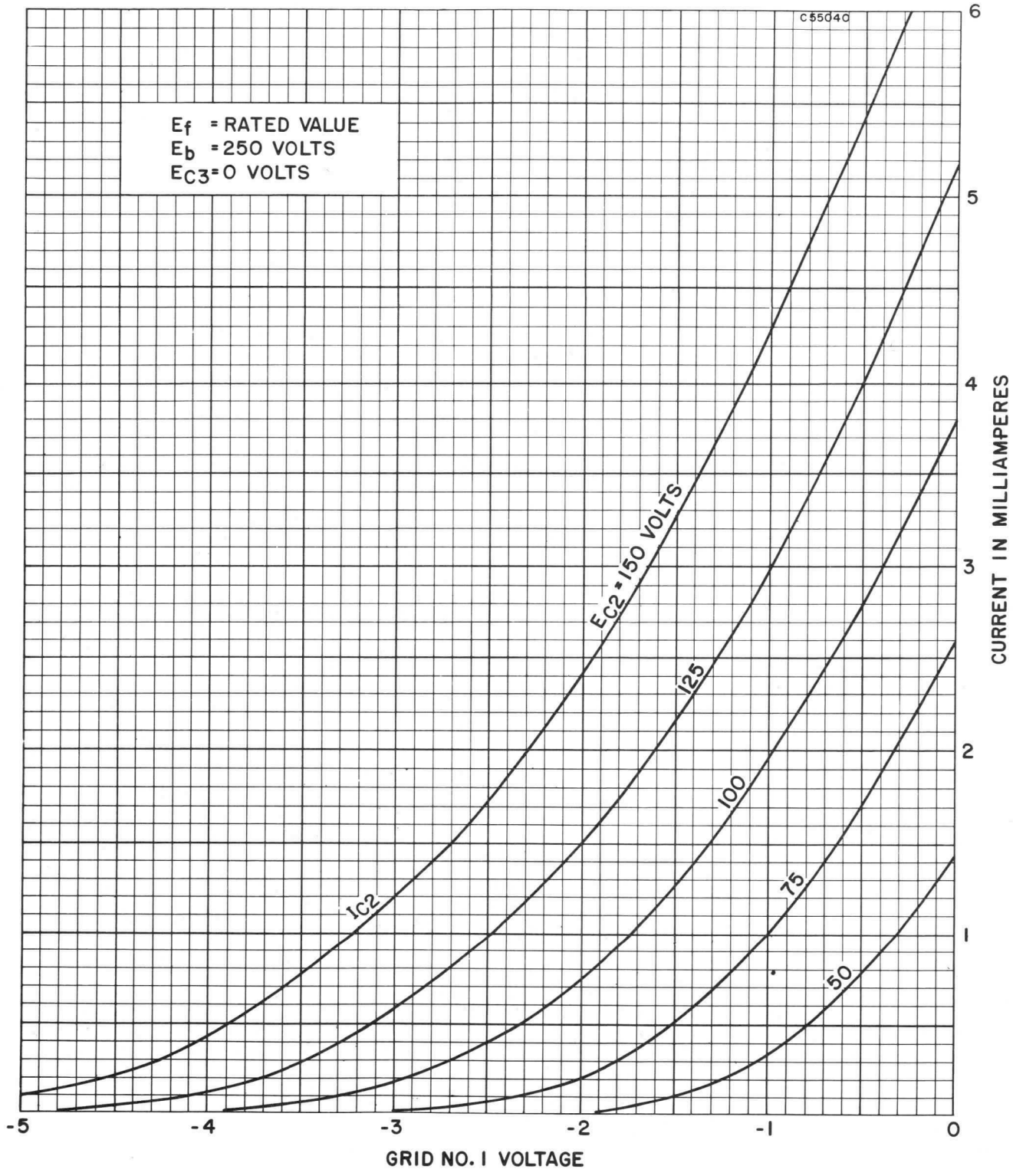

AVERAGE TRANSFER CHARACTERISTICS

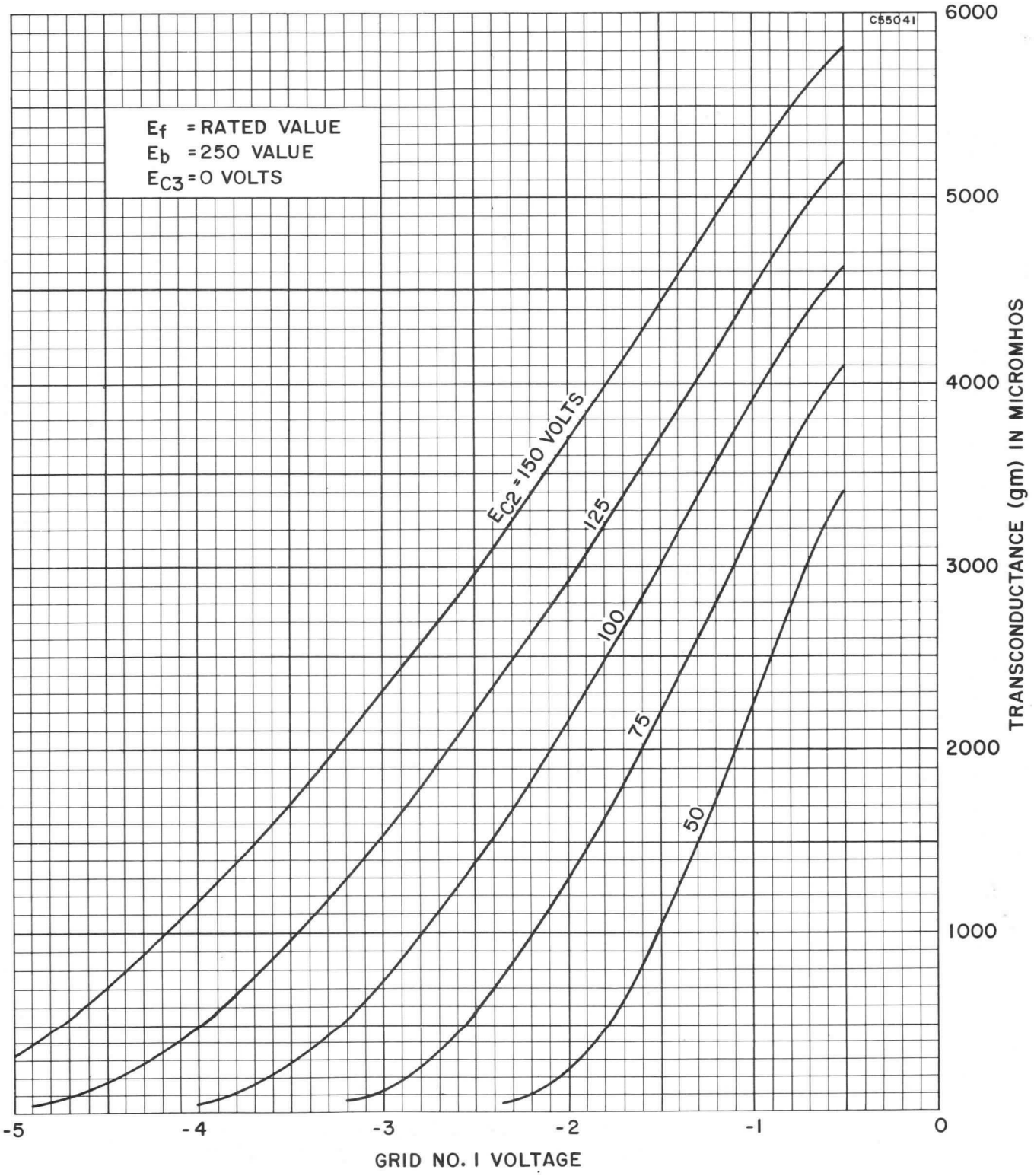

RATING CHART

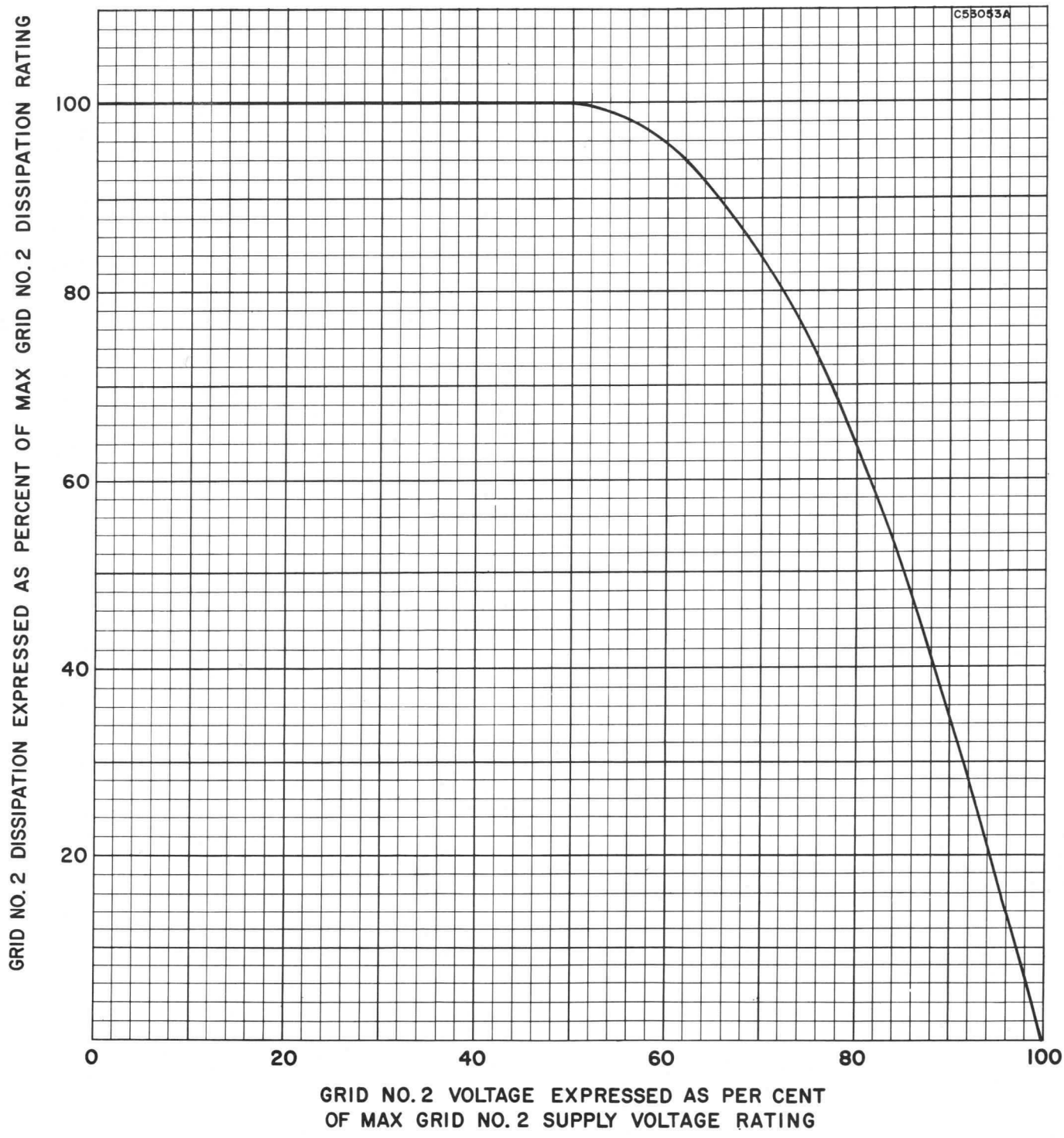

MECHANICAL DATA

Bulb	T-6½
Base	E9-1, Miniature Button 9-Pin
Outline	6-3
Basing	9LK
Cathode	Coated Unipotential
Mounting Position	Any

ELECTRICAL DATA

HEATER CHARACTERISTICS

	7551	7558	
Heater Voltage	12 to 15	6.3 ± 5 %	Volts
Heater Current	—	800	Ma
Heater Current at 13.5 Volts	360	—	Ma
Peak Heater-Cathode Voltage			
Heater Negative with Respect to Cathode		100	Volts
Heater Positive with Respect to Cathode		100	Volts

DIRECT INTERELECTRODE CAPACITANCES (Unshielded)

Grid No. 1 to Plate	0.15 pf	Max.
Input: g1 to (k+g3+g2+h)	10 pf	
Output: p to (k+g3+g2+h)	5.5 pf	

MAXIMUM RATINGS (Absolute Maximum Values)

RF Power Amplifier Service—Class "C"

	Telephony[1]		Telegraphy F.M. Telephony		
	CCS	ICAS	CCS	ICAS	
Plate Voltage	250	250	300	300	Volts
Grid No. 3 Voltage	0	0	Tied to Cathode		
Grid No. 2 Voltage	250	250	250	250	Volts
Grid No. 1 Voltage	−125	−125	−125	−125	Volts
Plate Current	60	70	70	80	Ma
Grid No. 2 Current	10	10	15	15	Ma
Grid No. 1 Current	5	5	5	5	Ma
Plate Input	15	17.5	21	24	Watts
Plate Dissipation	7	8	10	12	Watts
Grid No. 2 Input	1.4	1.4	2	2	Watts
Grid No. 1 Circuit Resistance	0.1	0.1	0.1	0.1	Megohm
Bulb Temperature (at Hottest Point)	225	225	225	225	Cent.

RF FREQUENCY MULTIPLIER AND AF AB1 AMPLIFIER SERVICE

	Class AB1 AF Amplifier	Class "C" Freq. Multiplier		
	CCS	CCS	ICAS	
Plate Voltage	300	300	300	Volts
Grid No. 3 Voltage	0	0	0	Volts
Grid No. 2 Voltage	250	250	250	Volts
Grid No. 1 Voltage	—	−125	−125	Volts
Plate Current	70	50	60	Ma
Grid No. 2 Current	—	15	15	Ma
Grid No. 1 Current	—	5	5	Ma
Plate Input	21	13	15	Watts
Plate Dissipation	10	10	12	Watts
Grid No. 2 Input	2	2	2	Watts
Grid No. 1 Circuit Resistance	0.1	0.1	0.1	Megohm
Bulb Temperature (at Hottest Point)	225	225	225	° Cent.

QUICK REFERENCE DATA

The Sylvania Types 7551 and 7558 are T-6½ beam pentodes designed for use as a Class "C" RF amplifier, oscillator, or frequency multiplier up to 175 Mc. They can also be used as a modulator or AF amplifier.
Type 7551 is designed for mobile equipment and Type 7558 is designed for fixed station equipment.

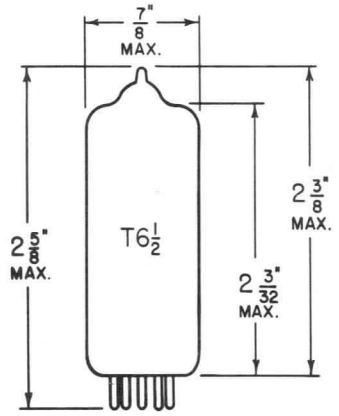

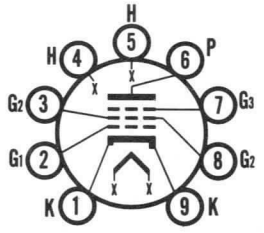

9LK

SYLVANIA
ELECTRONIC TUBES
A Division of
Sylvania Electric Products Inc.
RECEIVING TUBE
OPERATIONS
EMPORIUM, PA.

Prepared and Released By The
TECHNICAL PUBLICATIONS SECTION
EMPORIUM, PENNSYLVANIA

JUNE, 1963

File Under
RECEIVING TUBES

CHARACTERISTICS

Plate Voltage	250 Volts
Grid No. 3	Tied to Cathode
Grid No. 2 Voltage	250 Volts
Grid No. 1 Voltage	−18 Volts
Plate Current	40 Ma
Grid No. 2 Current	3 Ma
Transconductance	5300 μmhos
Amplification Factor (G2 to G1)	8.7

TYPICAL OPERATION (Class "C")

RF Power Amplifier—Up to 175 Mc.

	Telephony[1]		Telegraphy or F.M. Telephony		
	CCS	ICAS	CCS	CCS	ICAS
Plate Voltage	250	250	250	300	300 Volts
Grid No. 3 Voltage	Tied to Cathode				
Grid No. 2 Voltage	250[2]	250[2]	200	200	250 Volts
For Grid No. 1 Voltage[3]	−70	−75	−40	−42	−55 Volts
Use Grid No. 1 Resistor[3]	33K	33K	—	—	— Ohms
Peak RF Grid No. 1 Voltage	75	80	47	52	62 Volts
Grid No. 1 Current (Approx.)	2.1	2.3	1.5	2.1	1.6 Ma
Plate Current	60	70	60	70	80 Ma
Grid No. 2 Current	2.5	3.0	3.7	3.7	5.1 Ma
Driving Power (Approx.)	1.0	1.0	1.0	1.0	1.5 Watt
Power Output (Approx.)[4]	6.5	7.5	6.5	8.5	10 Watts

RF Frequency Multiplier—Up to 175 Mc.

	Doubler to 175 Mc		Tripler to 175 Mc	
Plate Voltage	250	300	200	250 Volts
Grid No. 3 Voltage	Tied to Cathode			
Grid No. 2 Voltage	200	250	200	250 Volts
For Grid No. 1 Voltage	−53	−66	−90	−120 Volts
Use Grid No. 1 Resistor[3]	53K	44K	50K	70K Ohms
Peak RF Grid No. 1 Voltage	60	74	105	130 Volts
Grid No. 1 Current (Approx.)	1.0	1.5	1.85	1.7 Ma
Plate Current	50	60	50	60 Ma
Grid No. 2 Current	2.6	3.5	3.0	3.9 Ma
Driving Power (Approx.)	0.4	0.6	0.4	0.6 Watts
Power Output (Approx.)[4]	3.0	4.5	1.4	2.3 Watts

AF POWER AMPLIFIER (Class "AB1"—Push Pull)

Plate Voltage	300 Volts
Grid No. 3	Tied to Cathode
Grid No. 2 Voltage[5]	250 Volts
Grid No. 1 Voltage[5]	−21 Volts
Peak AF Grid No. 1 Voltage	20 Volts
Zero Signal Plate Current	40 Ma
Maximum Signal Plate Current	125 Ma
Zero Signal Grid No. 2 Current	2 Ma
Maximum Signal Grid No. 2 Current	14 Ma
Plate to Plate Load Resistance	5000 Ohms
Power Output (Approx.)	20.5 Watts
Total Harmonic Distortion	5 Percent

NOTES:

1. *Carrier conditions for use with a maximum modulation factor of 1.0.*
2. *Obtained preferably from a separate source-modulated with the plate supply or from the modulated plate supply through a series resistance.*
3. *Value of grid resistor needed to develop the recommended grid bias voltage. Grid No. 1 bias voltage can also be obtained from a combination of Grid No. 1 resistor with either fixed supply or cathode resistor.*
4. *This value of useful power is measured at load of output circuit.*
5. *Obtained preferably from a separate source.*

AVERAGE PLATE CHARACTERISTICS

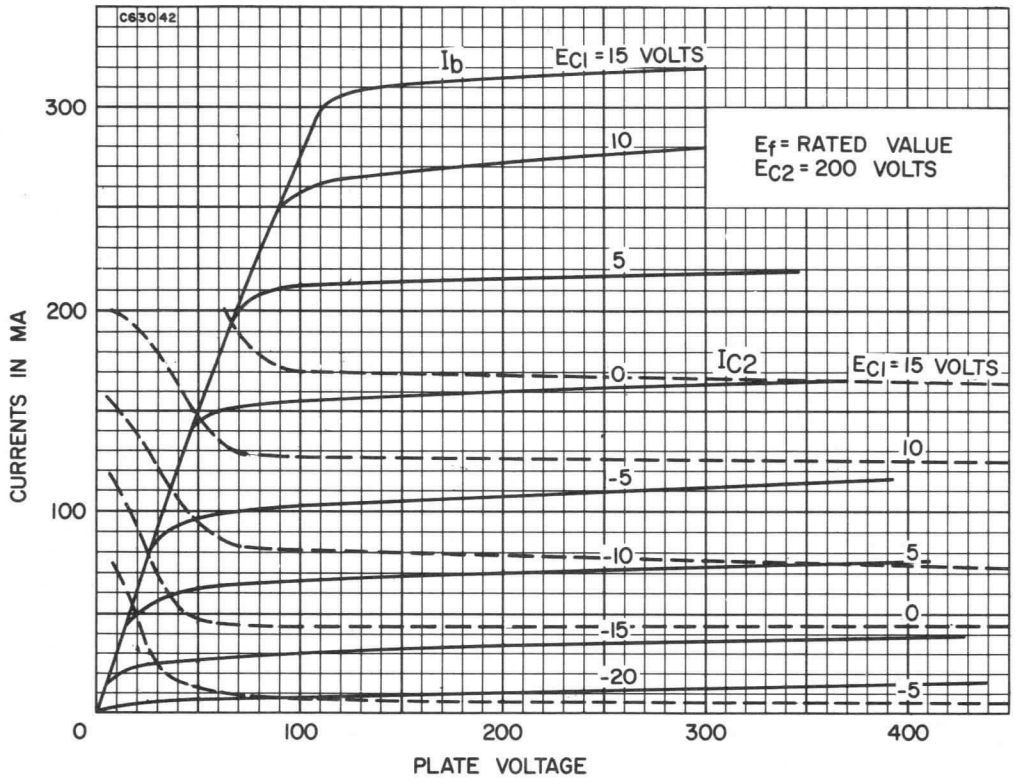

AVERAGE GRID CURRENT

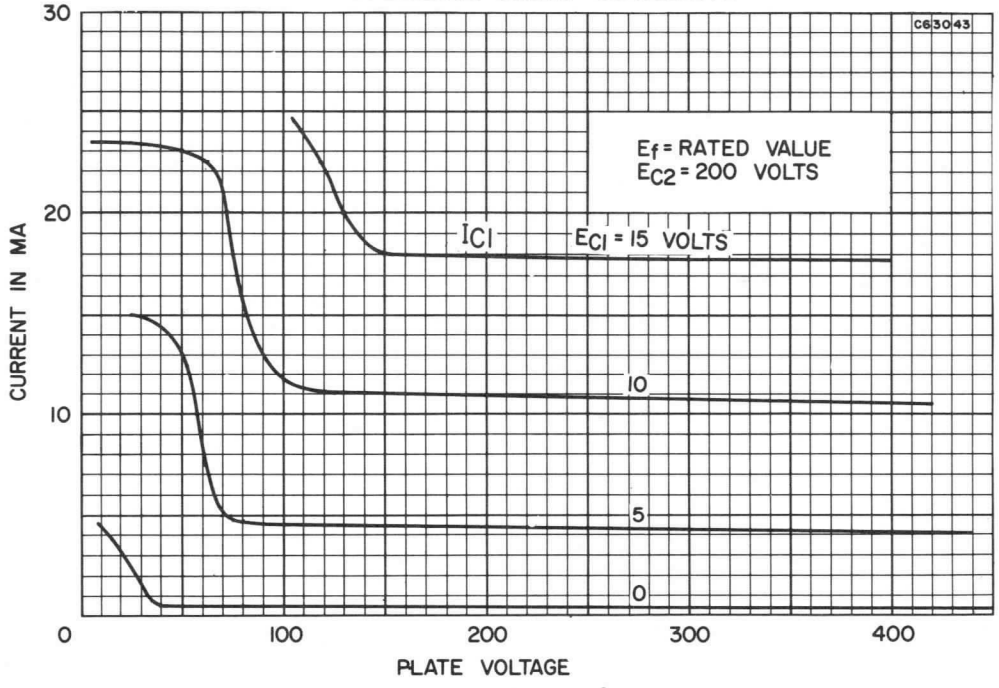

AVERAGE PLATE CHARACTERISTICS

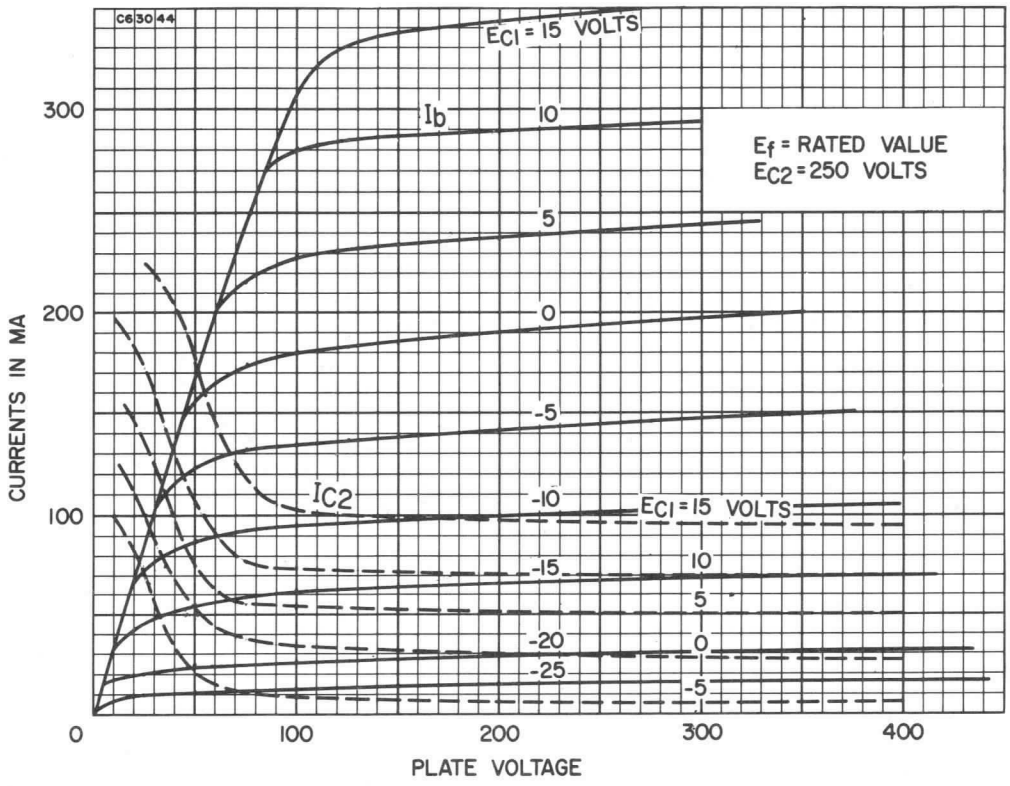

AVERAGE GRID CURRENT

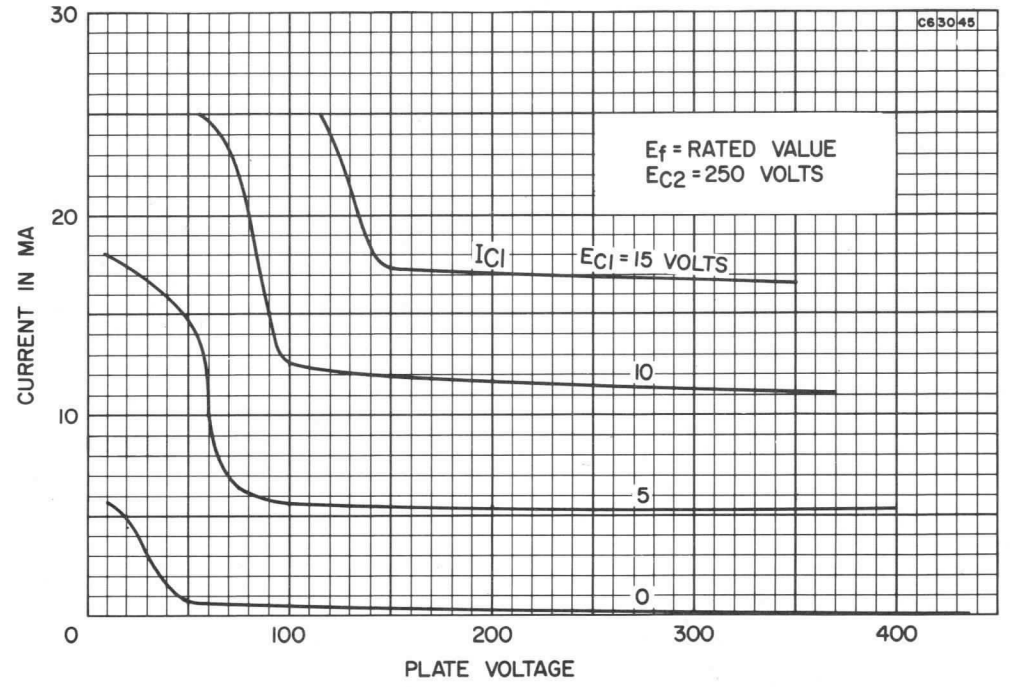

MECHANICAL DATA

Bulb	T-9
Base	Intermediate Shell Octal 7-Pin (B7-233 or B8-142)
Outline	9-11
Basing	8KG
Cathode	Coated Unipotential
Mounting Position	Any

ELECTRICAL DATA

HEATER CHARACTERISTICS

Heater Voltage	6.3 Volts
Heater Current	0.8 Amperes
Maximum Heater-Cathode Voltage	
Heater Negative with Respect to Cathode	
Total DC and Peak	200 Volts
Heater Positive with Respect to Cathode	
DC	100 Volts
Total DC and Peak	200 Volts

DIRECT INTERELECTRODE CAPACITANCES (Unshielded)

Grid No. 1 to Plate	0.25 $\mu\mu$f
Input	10 $\mu\mu$f
Output	5.0 $\mu\mu$f

RATINGS (Design Maximum Values)

Plate Voltage	550 Volts
Grid No. 2 Voltage	440 Volts
Plate Dissipation	19 Watts
Grid No. 2 Dissipation[1]	3.3 Watts
Cathode Current	85 Ma
Grid No. 1 Circuit Resistance	
Fixed Bias	0.3 Megohms
Self Bias	1.0 Megohms

CHARACTERISTICS AND TYPICAL OPERATION

	Pentode Operation S.T. — Class A1 Amp	Ultra-Linear Operation[2] Class AB1 — Push-Pull	
Plate Voltage	300	400	425 Volts
Grid No. 2 Voltage	300	Note 2	Note 2 Volts
Grid No. 1 Voltage	−10	−20.5	— Volts
Cathode Resistor	—	—	185 Ohms
Peak AF Grid Voltage	10	20.5	21 Volts
Zero Signal Plate Current	60	80	88 Ma
Max. Signal Plate Current	75	138	104 Ma
Zero Signal Grid No. 2 Current	8	11.5	13 Ma
Max. Signal Grid No. 2 Current	15	26.4	17.5 Ma
Transconductance	10.2K	—	— μmhos
Plate Resistance (Approx.)	29K	—	— Ohms
Load Resistance	3K	—	— Ohms
Load Resistance (PL to PL)	—	6600	6600 Ohms
Power Output	11	32	26 Watts
Total Harmonic Distortion	13	1.0	2 Percent

QUICK REFERENCE DATA

Sylvania Type 7591 is a power output tube, contained in a T-9 envelope, capable of furnishing 43 watts of power output at very low distortion when operated as a Push-Pull Class AB1 Amplifier.

In ultra-linear operation a power output of 32 watts is available with a 400 volt plate voltage.

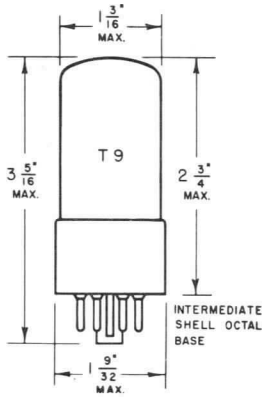

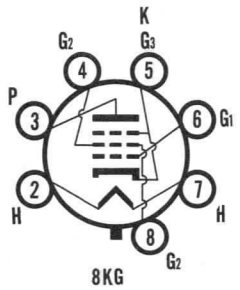

SYLVANIA ELECTRONIC TUBES

A Division of Sylvania Electric Products Inc.

RECEIVING TUBE OPERATIONS

EMPORIUM, PA.

Prepared and Released By The TECHNICAL PUBLICATIONS SECTION EMPORIUM, PENNSYLVANIA

OCTOBER, 1961

File Under
RECEIVING TUBES

CHARACTERISTICS AND TYPICAL OPERATION (Con't.)

Pentode Operation (Class AB1 Push-Pull Amp.)

Plate Voltage	300	350	400	450	450	450 Volts
Grid No. 2 Voltage	300	350	350	350	400	400 Volts
Grid No. 1 Voltage	−12.5	−15.5	−16	−16.5	−21	— Volts
Cathode Resistor	—	—	—	—	—	200 Ohms
Peak AF Grid to Grid Voltage	25	31	32	33	42	28 Volts
Zero Signal Plate Current	86	92	85	77	66	82 Ma
Max. Signal Plate Current	116	130	143	153	144	94 Ma
Zero Signal Grid No. 2 Current	12.6	13	11	9.6	9.4	11.5 Ma
Max. Signal Grid No. 2 Current	26	28.6	27	27	30	22 Ma
Load Resistance (PL to PL)	6600	6600	6600	6600	6600	9000 Ohms
Power Output	23	30	37	43	45	28 Watts
Total Harmonic Distortion	2.5	2	1.5	1.5	1.5	2 Percent

NOTES

1. *Grid No. 2 Dissipation may be permitted to reach 6 watts during the periods of maximum input of speech and music signals. For efficient operation of Grid No. 2, the two Grid No. 2 connections, Pins 4 and 8, should be externally tied together.*
2. *Grid No. 2 tapped at 40% of the primary winding.*

AVERAGE PLATE CHARACTERISTICS

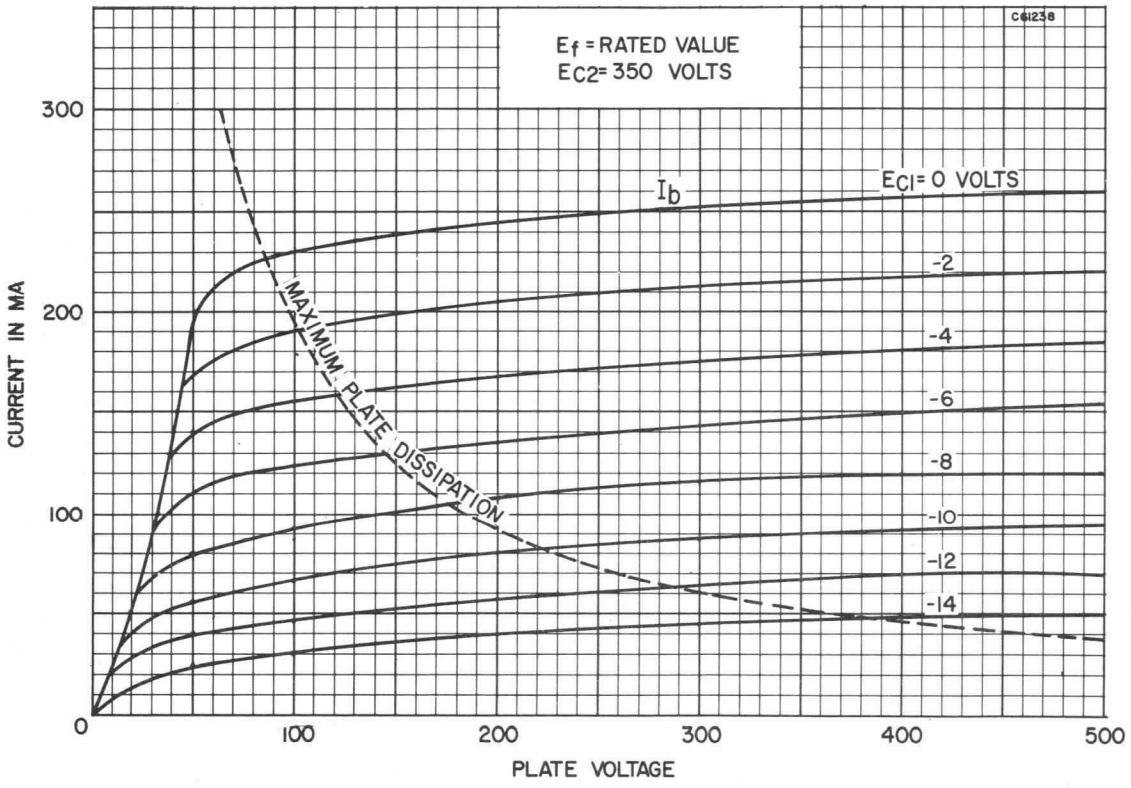

AVERAGE PLATE CHARACTERISTICS

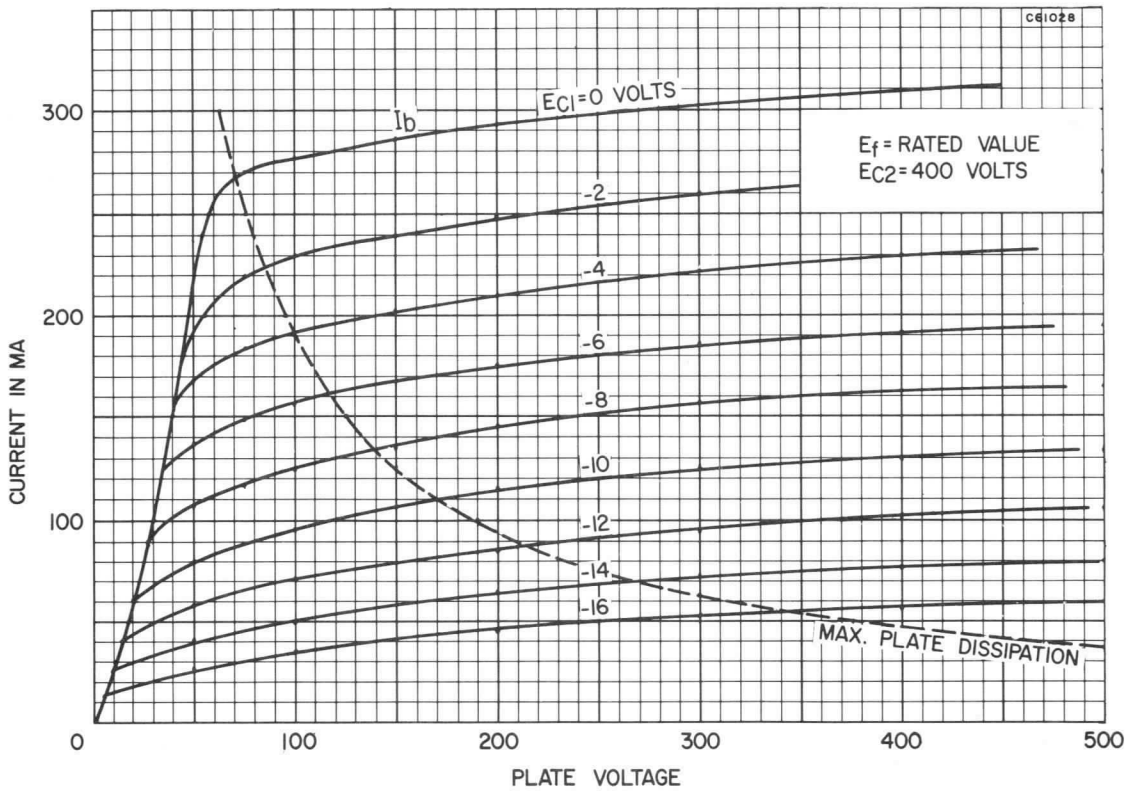

AVERAGE PLATE CHARACTERISTICS

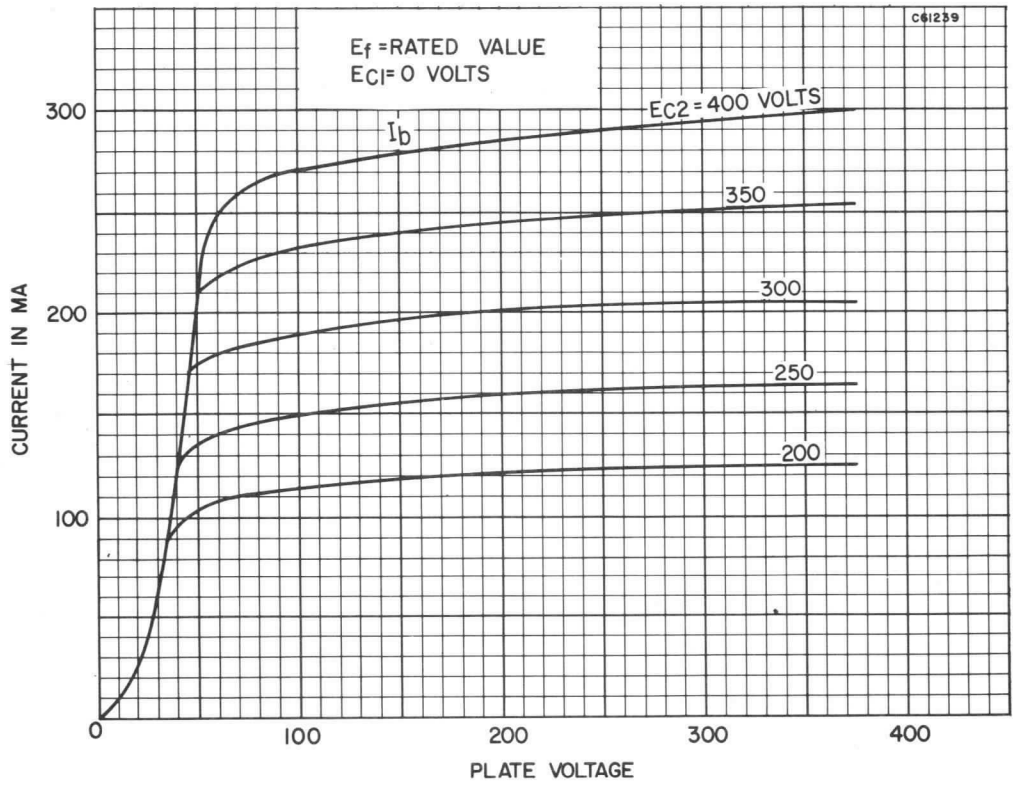

AVERAGE PLATE CHARACTERISTICS
(Triode Connected)

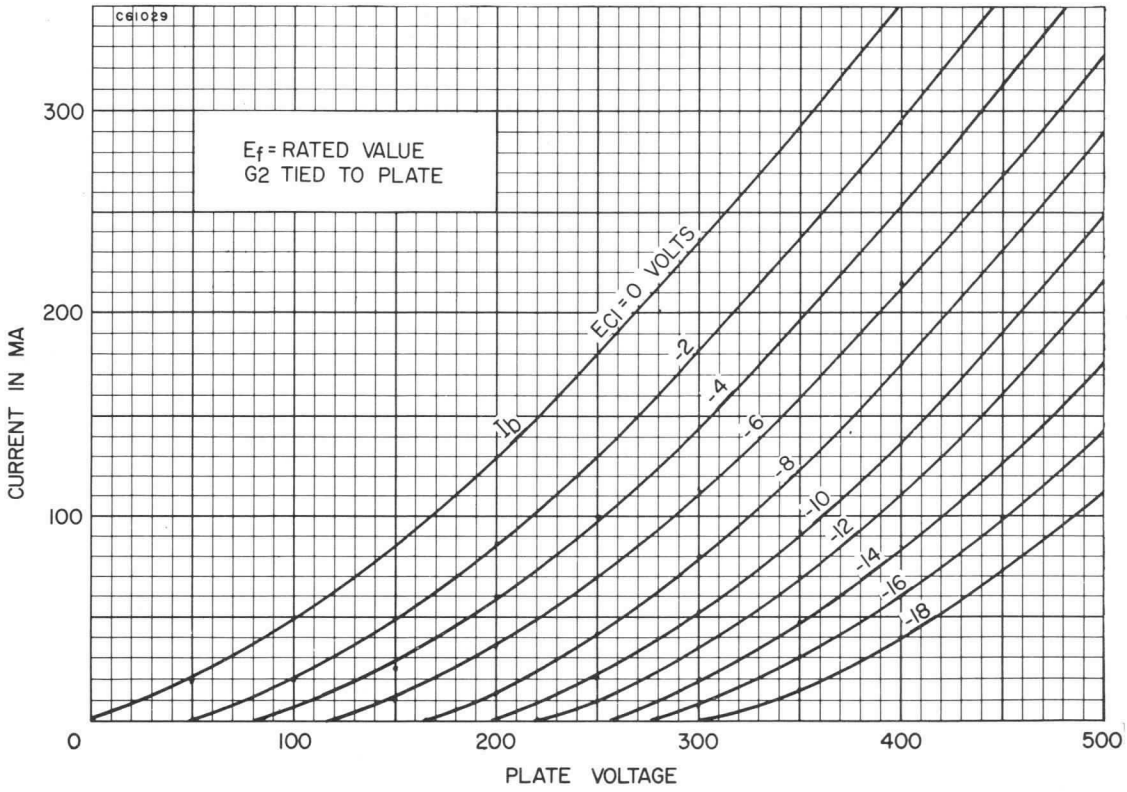

AVERAGE TRANSFER CHARACTERISTICS

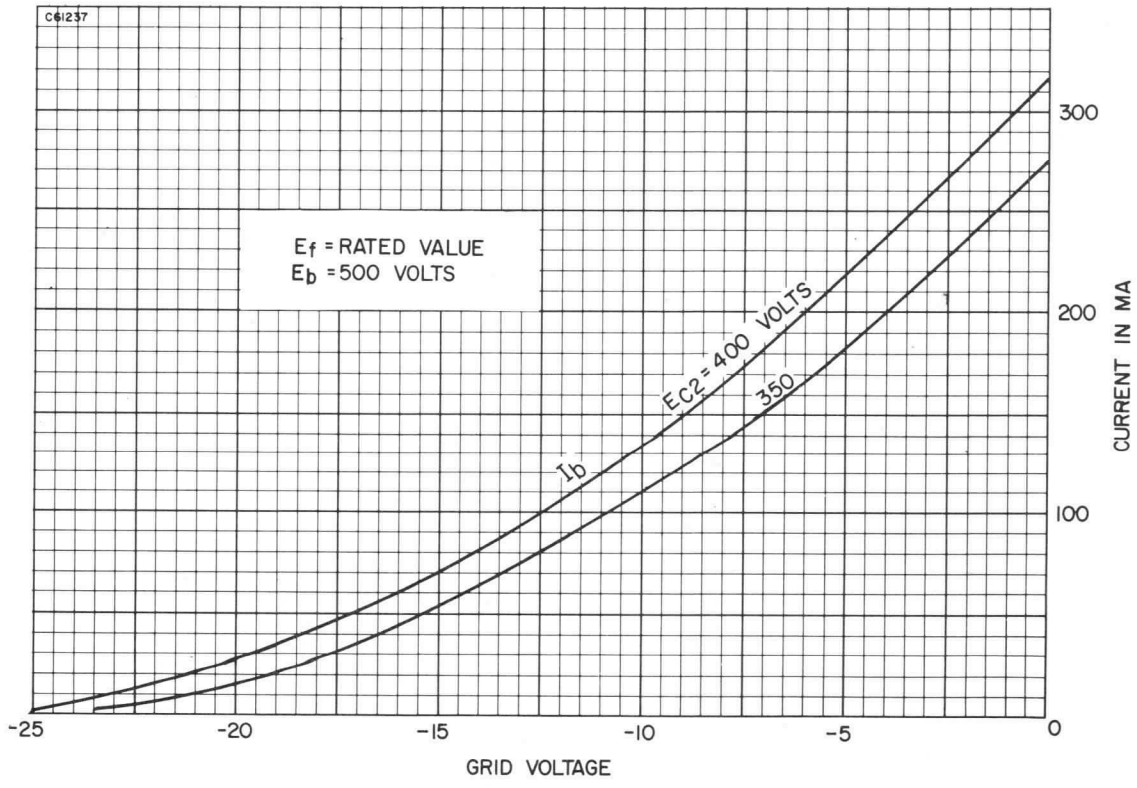

OPERATIONAL CHARACTERISTICS

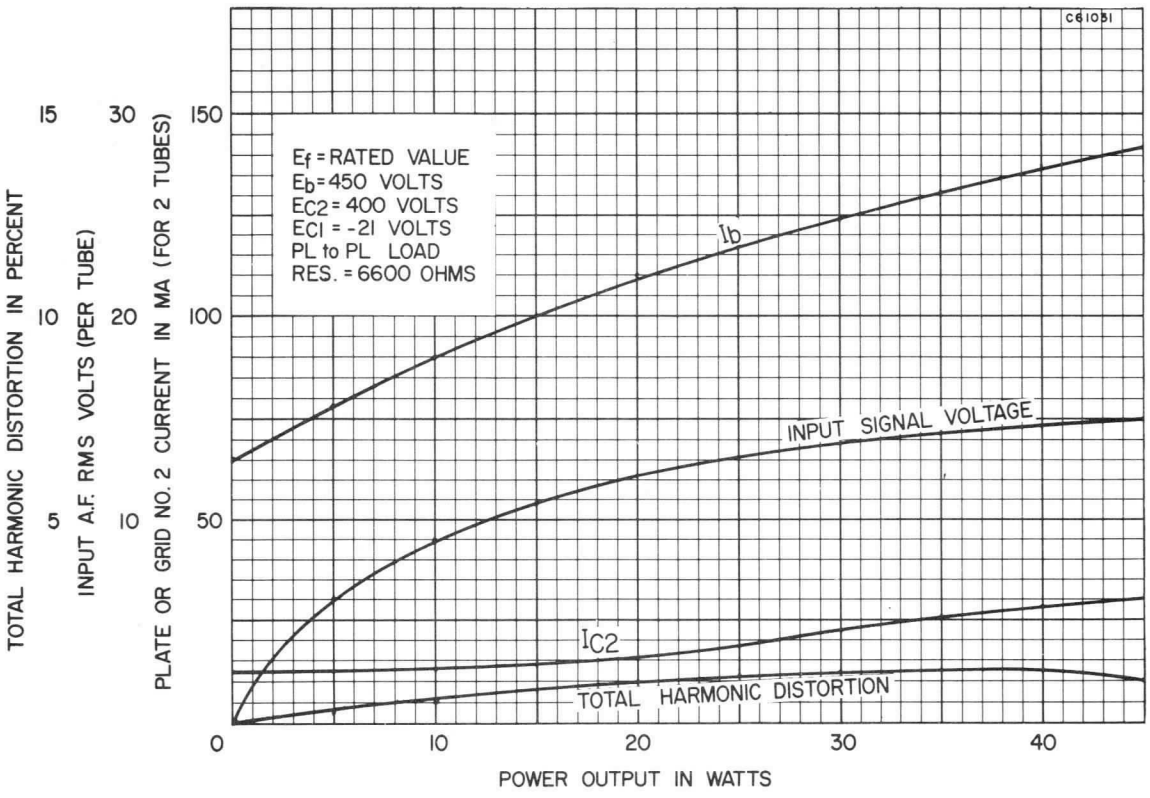

OPERATIONAL CHARACTERISTICS
(Ultra-Linear Operation)

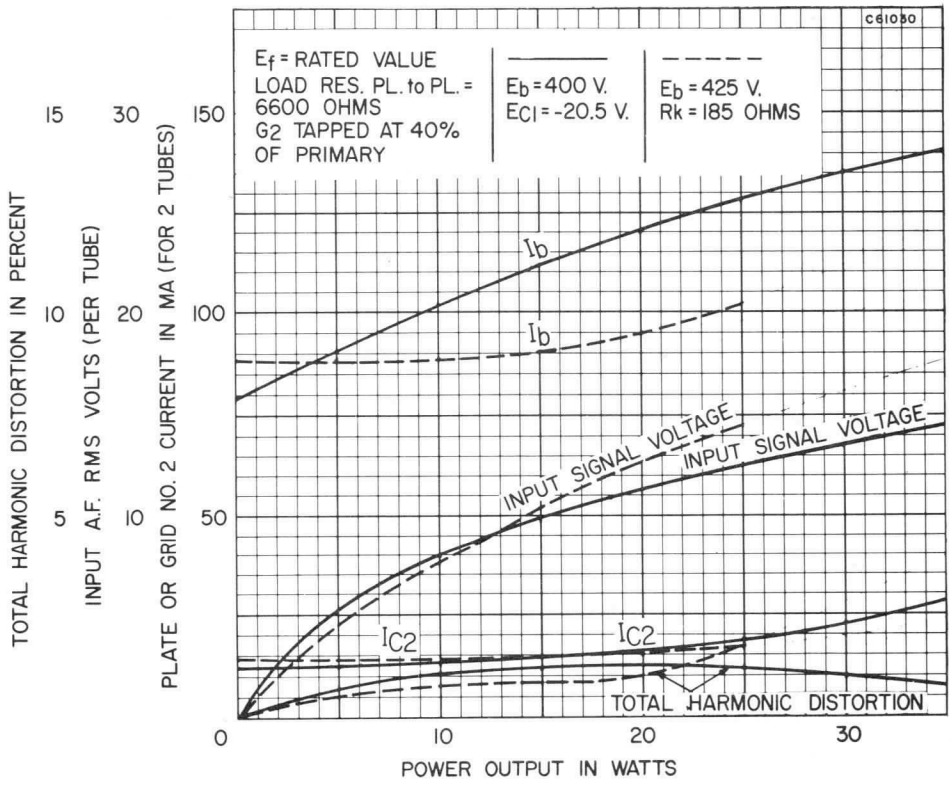

MECHANICAL DATA

Bulb	T 6½
Base	E9-1, Miniature Button 9-Pin
Outline	6-3
Basing	9AE
Cathode	Coated Unipotential
Mounting Position	Any

ELECTRICAL DATA

HEATER CHARACTERISTICS

Heater Voltage[1]	6.3 Volts	
Heater Current	500 Ma	
Maximum Heater Voltage Range	5.7-6.9 Volts	
Heater-Cathode Voltage (Design Maximum Values)		
Heater Negative with Respect to Cathode		
Total DC and Peak	200 Volts	Max.
Heater Positive with Respect to Cathode		
DC	100 Volts	Max.
Total DC and Peak	200 Volts	Max.

DIRECT INTERELECTRODE CAPACITANCES (Unshielded)

Triode Section		
Grid to Plate	2.4 $\mu\mu$f	
Input: g to (h+Tk+Pk, G3, I.S.)	2.2 $\mu\mu$f	
Output: p to (h+Tk+Pk, G3, I.S.)	0.3 $\mu\mu$f	
Pentode Section		
Grid No. 1 to Plate	0.15 $\mu\mu$f	Max.
Input: g1 to (h+k+g2+g3+I.S.)	7.0 $\mu\mu$f	
Output: p to (h+k+g2+g3+I.S.)	2.8 $\mu\mu$f	

RATINGS (Design Maximum Values)

	Triode Section	Pentode Section		
Plate Voltage	330	330	Volts	Max.
Grid No. 2 Supply Voltage	—	330	Volts	Max.
Grid No. 2 Voltage	See Rating Chart			
Positive Grid No. 1 Voltage	0	0	Volts	Max.
Plate Dissipation	2.4	3.0	Watts	Max.
Grid No. 2 Dissipation	—	0.6	Watt	Max.
Grid Circuit Resistance				
Fixed Bias	0.5	0.25	Megohm	Max.
Cathode Bias	1.0	1.0	Megohm	Max.

CHARACTERISTICS AND TYPICAL OPERATION

Plate Voltage	215	220	Volts
Grid No. 2 Voltage	—	130	Volts
Grid No. 1 Voltage	-8.5	—	Volts
Cathode Bias Resistor	—	62	Ohms
Plate Current	7.5	10	Ma
Grid No. 2 Current	—	3.4	Ma
Transconductance	2500	5800	μmhos
Amplification Factor	18	—	
Plate Resistance	.0072	0.5	Megohms
Ec1 for Ib = 10 μa (Approx.)	-21	—	Volts

QUICK REFERENCE DATA

The Sylvania Type 7687 is a triode-pentode designed primarily for High Fidelity audio applications. The pentode section is particularly suited to preamplifier service while the triode section is intended for use as a phase splitter.

Type 7687 features exceptionally low hum and noise output. Although basings differ, Type 7687 is similar to Type 7199. Type 7687 is an improved low noise version of Type 7199.

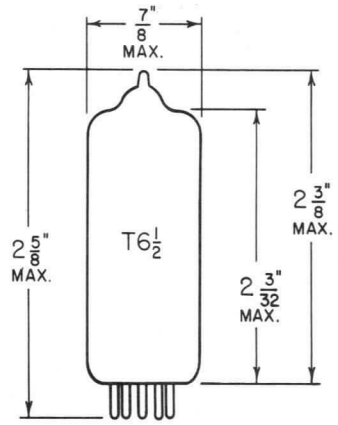

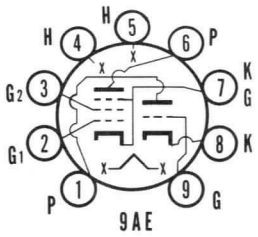

SYLVANIA
ELECTRONIC TUBES
A Division of
Sylvania Electric Products Inc.
RECEIVING TUBE
OPERATIONS
EMPORIUM, PA.

Prepared and Released By The
TECHNICAL PUBLICATIONS SECTION
EMPORIUM, PENNSYLVANIA

AUGUST, 1960

File Under
RECEIVING TUBES

EQUIVALENT NOISE AND HUM VOLTAGE
(Referenced to Grid — Average Values)

	Triode Section	Pentode Section	
Cathode Resistor (Bypassed 50 μ fd)	7.5[2]	10.5[3]	μ volts rms
Cathode Resistor (Unbypassed)	8[2]	20[3]	μ volts rms

NOTES:

1. *For parallel heater operation, equipment should be designed so that at normal supply voltage tubes will operate at this value of heater voltage.*
2. *Measured under the following conditions: Ef = 6.3 Vac; center-tap of heater transformer grounded; Ebb = 250 Vdc; R1 = 0.1 Megohm; Rk = 1500 ohms; Rg = 47,000 ohms; F = 25 to 10,000 cps.*
3. *Measured under the following conditions: Ef = 6.3 Vac; Center-tap of heater transformer grounded. Ebb = 250 Vdc; R1 = 0.22 Megohm; Ecc2 = 250 Vdc; Rg2 = 1.0 megohms; Cg2 = 0.1 μf; Rk = 1000 ohms; Rg1 = 100,000 ohms; F = 25 to 10,000 cps.*

AVERAGE PLATE CHARACTERISTICS
(Pentode Section)

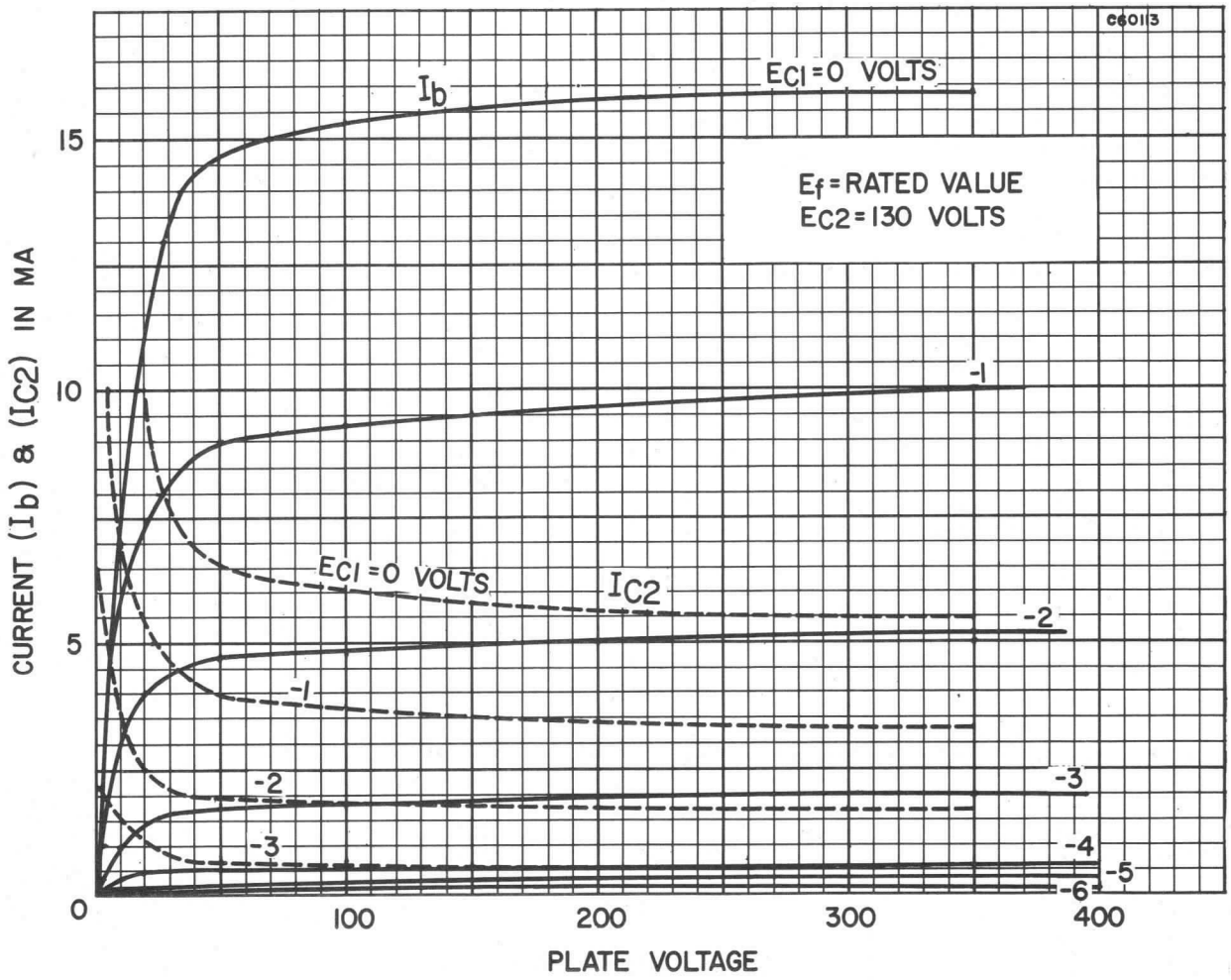

AVERAGE TRANSFER CHARACTERISTICS
(Pentode Section)

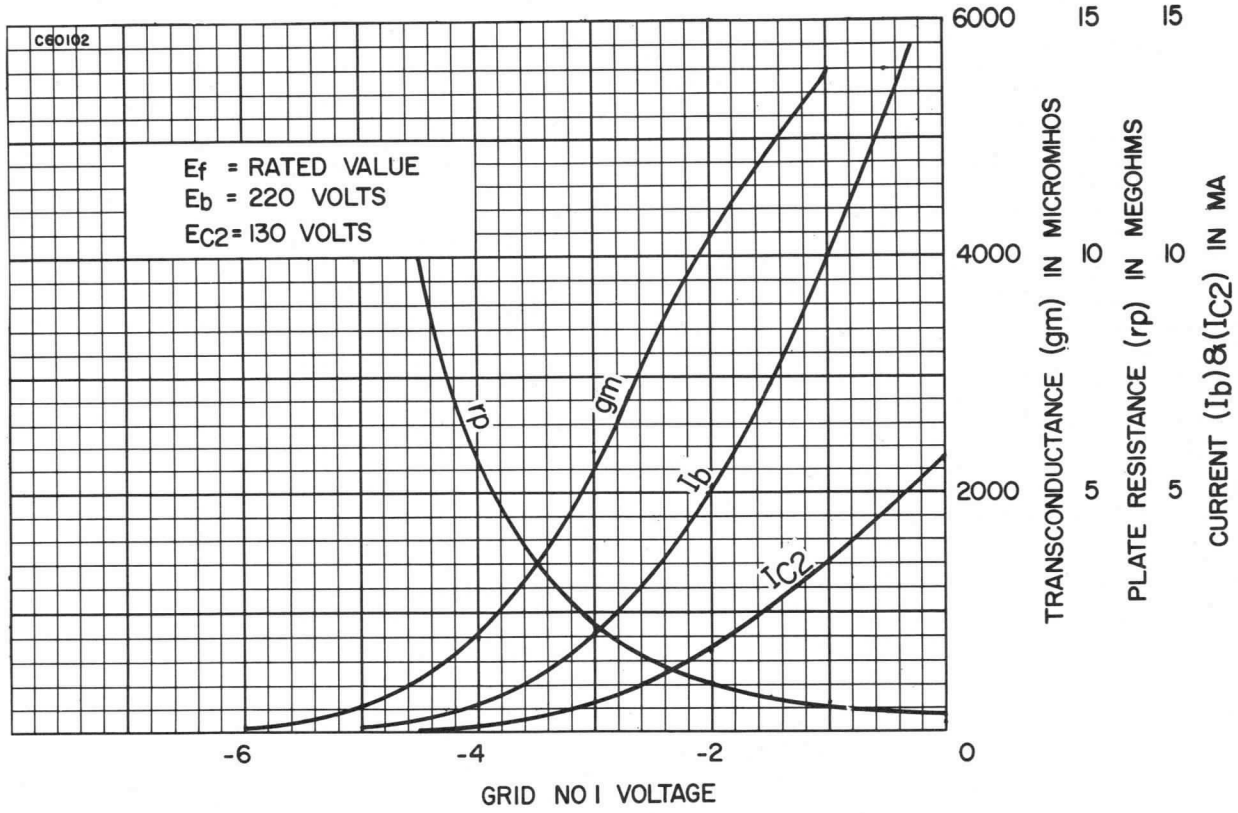

AVERAGE PLATE CHARACTERISTICS
(Triode Section)

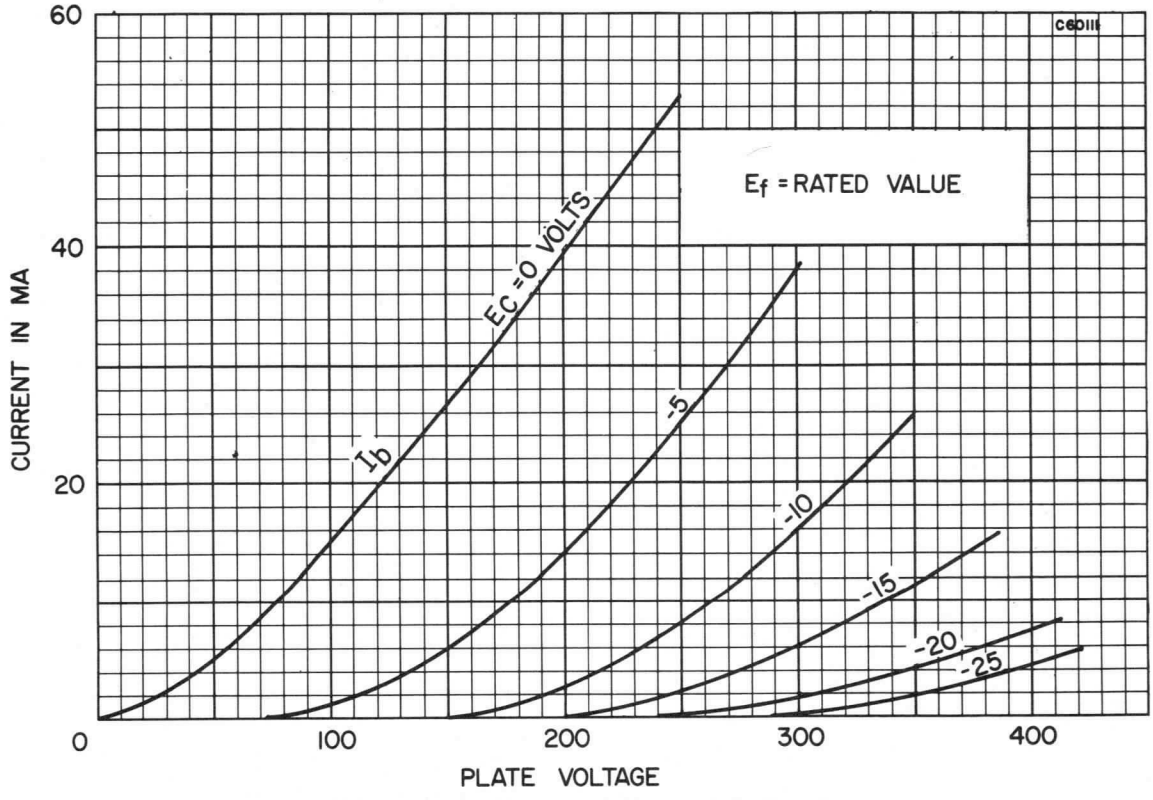

AVERAGE TRANSFER CHARACTERISTICS
(Triode Section)

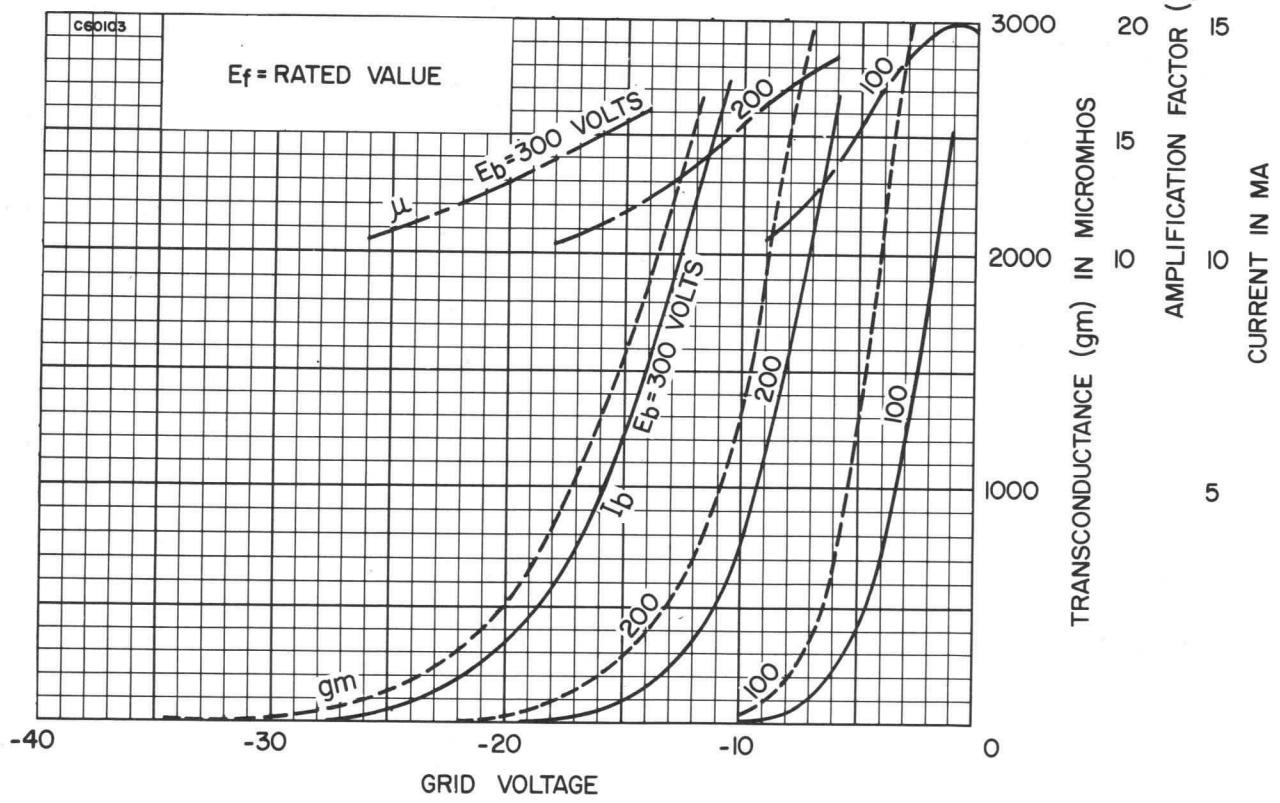

RATING CHART

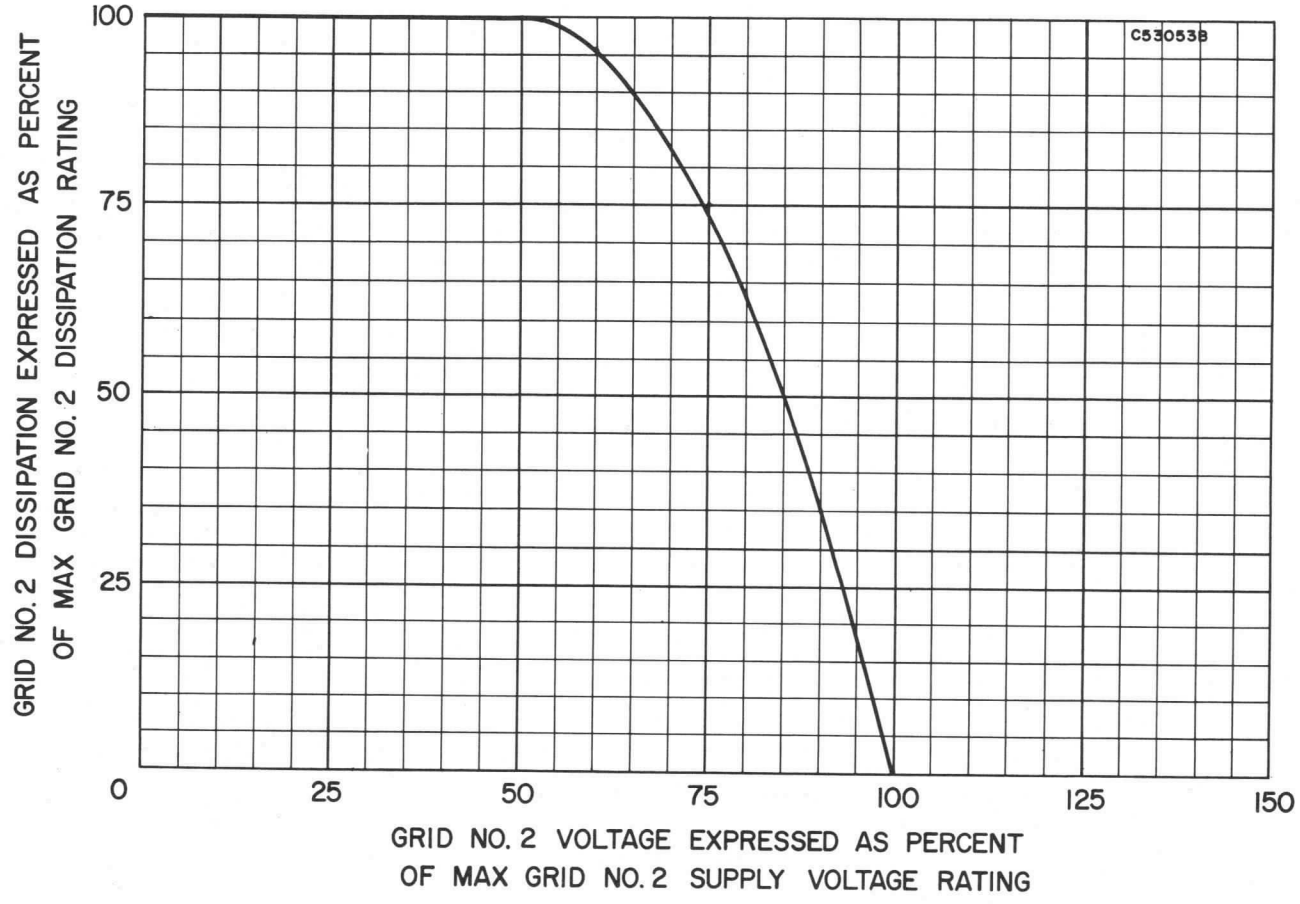

The 9T9 design utilizes a T-9 (1⅛" Dia.) bulb based to fit a standard 9-pin miniature socket. Advantages of the 9T9 include an increase in the heat dissipation safety margin, as compared to 9-pin miniature tubes employing T-6½ (13/16" Dia.) bulbs.

MECHANICAL DATA

Bulb	Special, T-9
Base	9-Pin, Same as E9-1, except Bulb Diameter
Outline	See Drawing
Basing	9MQ
Cathode	Coated Unipotential
Mounting Position	Any

ELECTRICAL DATA

HEATER CHARACTERISTICS	7754	7695		
Heater Voltage	6.3	50	Volts	
Heater Current[1]	1200	150	Ma	
Heater-Cathode Voltage (Design Maximum Values)				
Heater Negative with Respect to Cathode				
Total DC and Peak	200	200	Volts	Max.
Heater Positive with Respect to Cathode				
DC	100	100	Volts	Max.
Total DC and Peak	200	200	Volts	Max.

DIRECT INTERELECTRODE CAPACITANCES (Approx.)		
Grid No. 1 to Plate	0.75	μμf
Input: g1 to (h+k, g3+g2)	14	μμf
Output: p to (h+k, g3+g2)	9	μμf

RATINGS (Design Maximum Values)			
Plate Voltage	150	Volts	Max.
Grid No. 2 Voltage	150	Volts	Max.
Plate Dissipation	16	Watts	Max.
Grid No. 2 Dissipation	2.5	Watts	Max.
Grid No. 1 Circuit Resistance			
Fixed Bias	0.1	Megohm	Max.
Cathode Bias	0.5	Megohm	Max.

CHARACTERISTICS AND TYPICAL OPERATIONS			
Class A1 Amplifier (Single Tube)			
Plate Voltage	130	140	Volts
Grid No. 2 Voltage	130	140	Volts
Grid No. 1 Voltage	−11	—	Volts
Cathode Resistor	—	100	Ohms
Peak AF Grid No. 1 Voltage	11	11.3	Volts
Zero Signal Plate Current	100	100	Ma
Max. Signal Plate Current	108	100	Ma
Zero Signal Grid No. 2 Current	5	5	Ma
Max. Signal Grid No. 2 Current	15	14	Ma
Transconductance	11,000	—	μmhos
Plate Resistance (Approx.)	7,000	—	Ohms
Load Resistance	1,100	1,100	Ohms
Max. Signal Power Output	4.5	4.5	Watts
Total Harmonic Distortion (Approx.)	11	11	Percent
Class AB1 Push-Pull Amplifier (Values are for two tubes)			
Plate Voltage	130	140	Volts
Grid No. 2 Voltage	130	140	Volts
Grid No. 1 Voltage	−12	—	Volts
Cathode Resistor	—	50	Ohms
Peak AF Grid No. 1 to Grid No. 1 Voltage	22.6	22.6	Volts
Zero Signal Plate Current	195	210	Ma
Max. Signal Plate Current	220	220	Ma
Zero Signal Grid No. 2 Current	9	9	Ma
Max. Signal Grid No. 2 Current	24	20	Ma
Load Resistance (P1 to P1)	1,800	1,500	Ohms
Maximum Signal Power Output	10	10	Watts
Total Harmonic Distortion (Approx.)	6.0	4.0	Percent

QUICK REFERENCE DATA

The Sylvania Types 7695 and 7754 are beam power pentodes featuring remarkably high power sensitivity as audio power amplifiers. In Class A1 operation, they can deliver 4.5 watts of power with a B+ voltage of only 130 volts. As a result, the 7695 and 7754 make possible economies in power supply requirements.

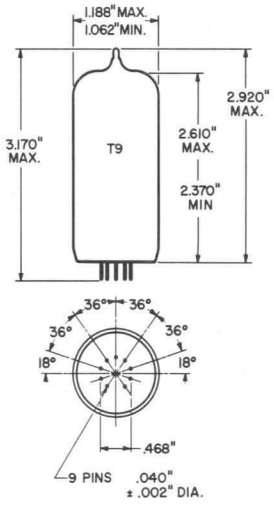

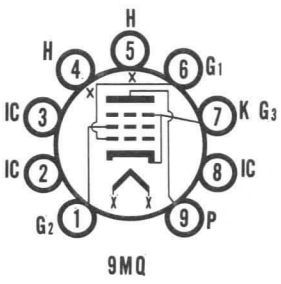

9MQ

SYLVANIA
ELECTRONIC TUBES
A Division of
Sylvania Electric Products Inc.
RECEIVING TUBE
OPERATIONS
EMPORIUM, PA.

Prepared and Released By The
TECHNICAL PUBLICATIONS SECTION
EMPORIUM, PENNSYLVANIA

AUGUST, 1960

File Under
RECEIVING TUBES

SINGLE ENDED PUSH-PULL, CLASS A

Transformerless Operation (See Circuit and Curve)

Supply Voltage	280 Volts
Plate Load Resistance	500 Ohms
Grid No. 2 Resistors (Rc2)	4000 Ohms
Peak AF Grid No. 1 Voltage	10.5 Volts
Power Output	5 Watts
Distortion	10 Percent

AVERAGE PLATE CHARACTERISTICS

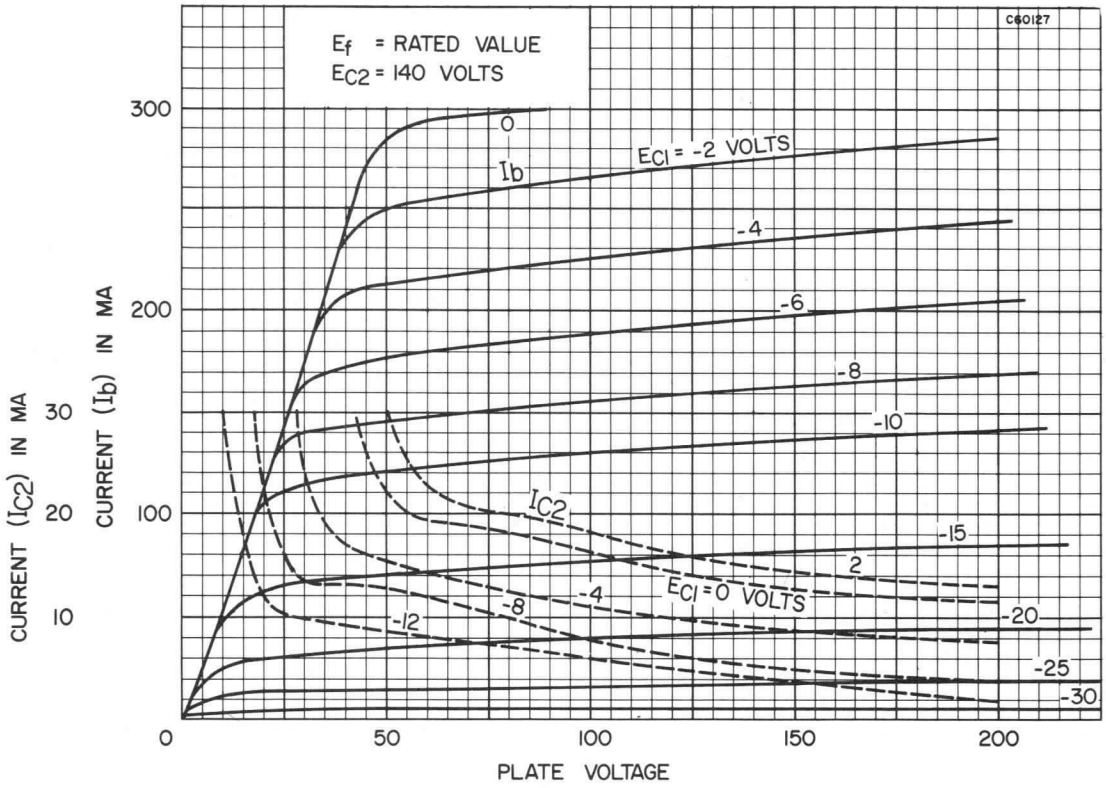

AVERAGE TRANSFER CHARACTERISTICS

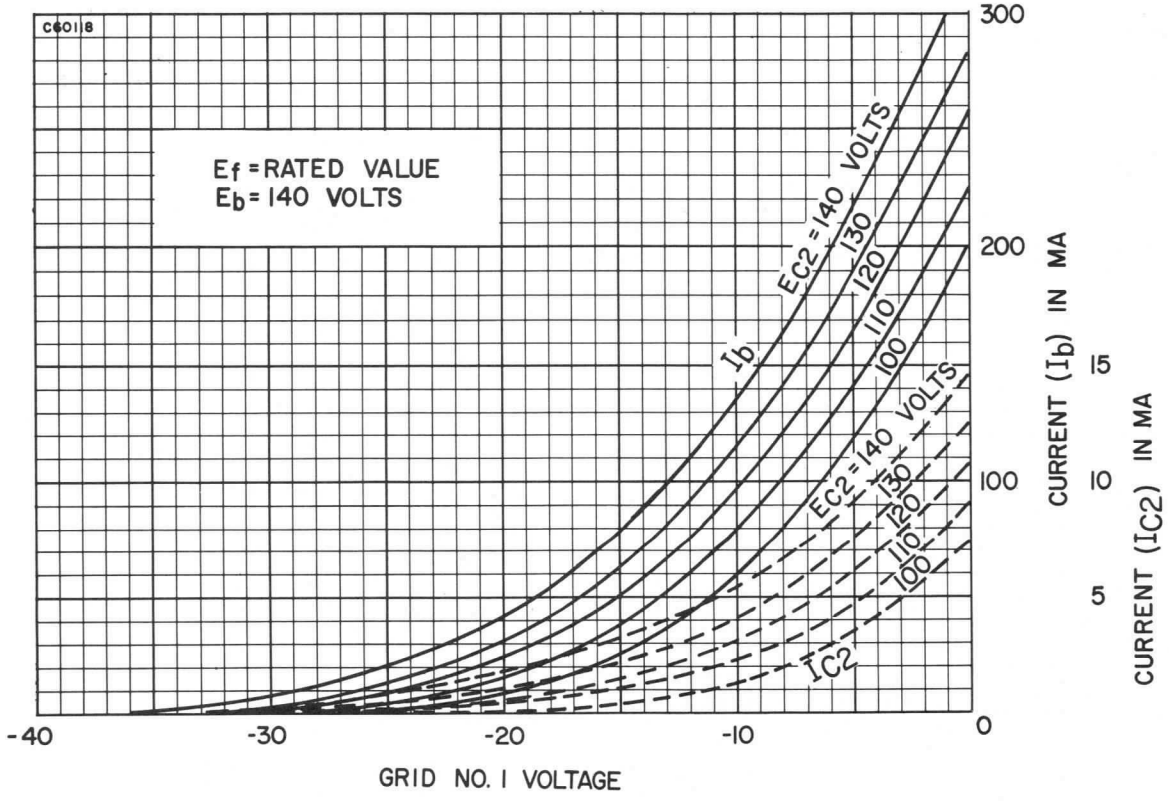

AVERAGE PLATE CHARACTERISTICS

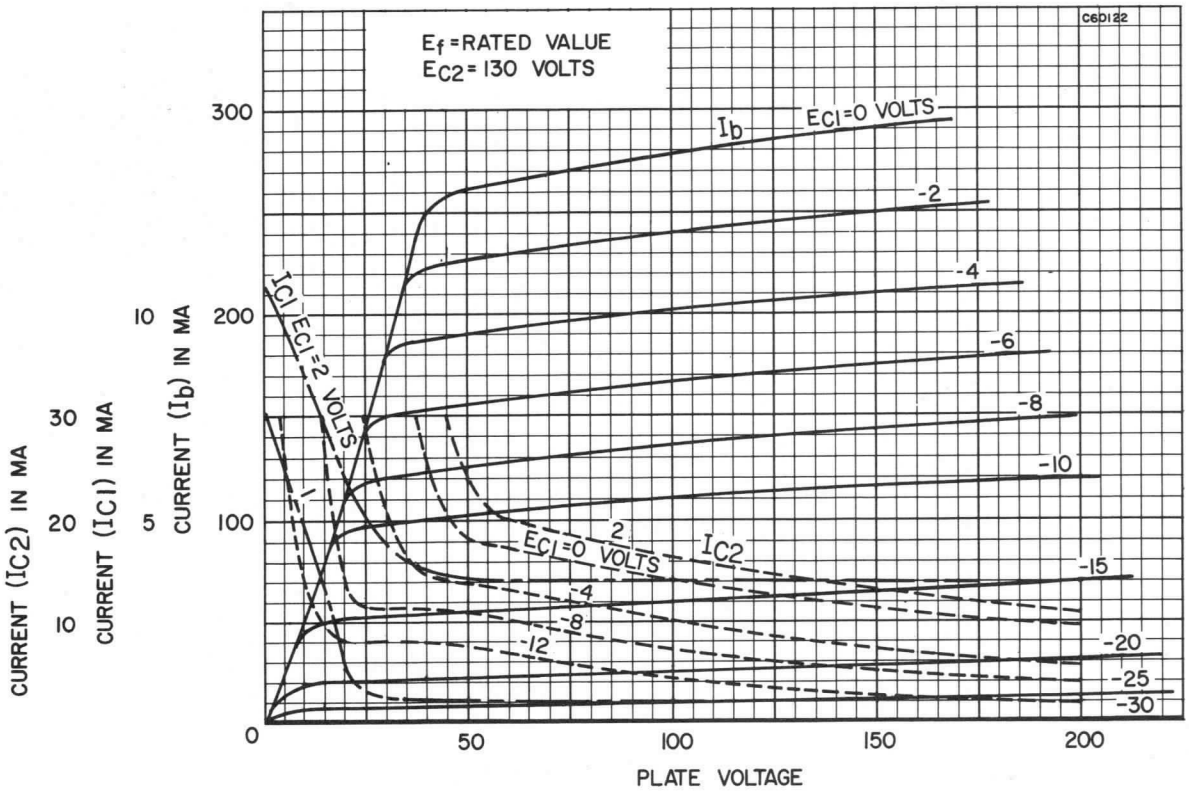

AVERAGE TRANSFER CHARACTERISTICS

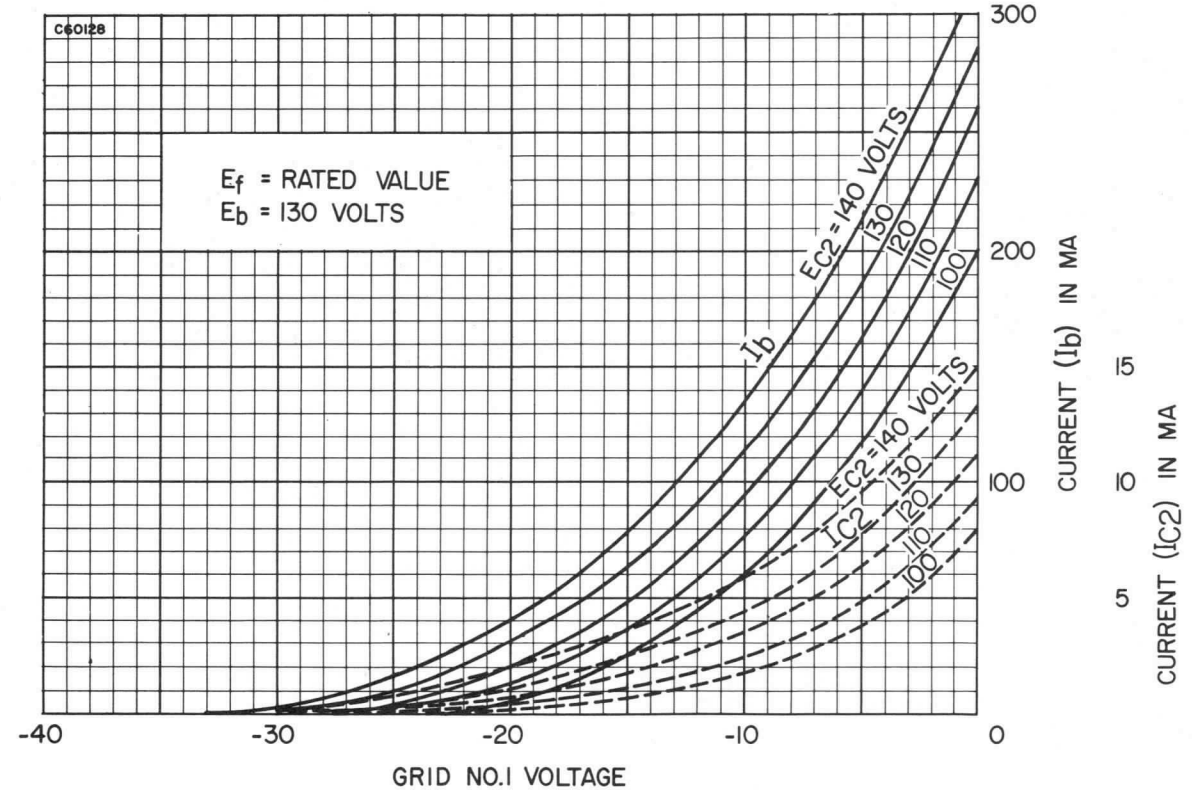

AVERAGE TRANSFER CHARACTERISTICS

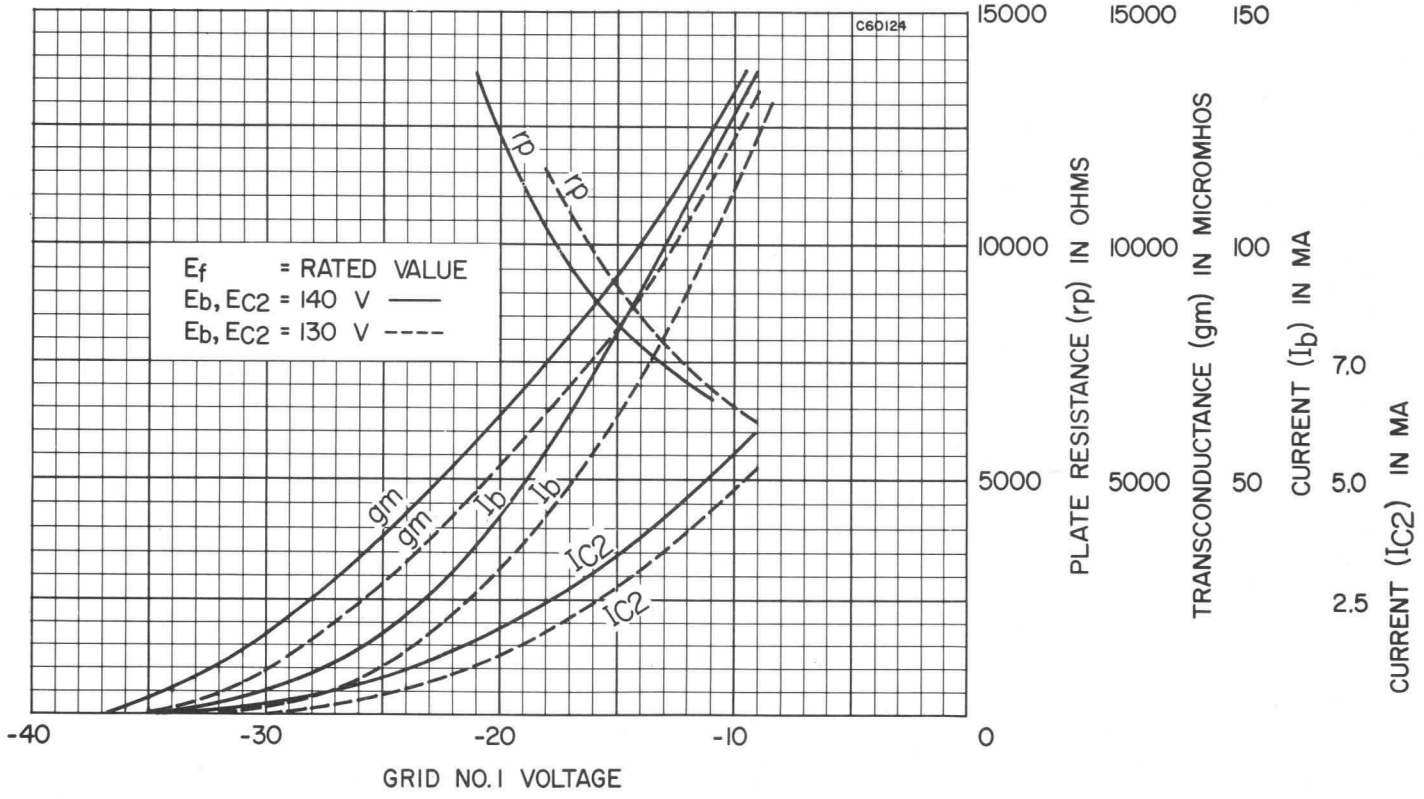

AVERAGE OPERATION CHARACTERISTICS
(Class A1 Amplifier)

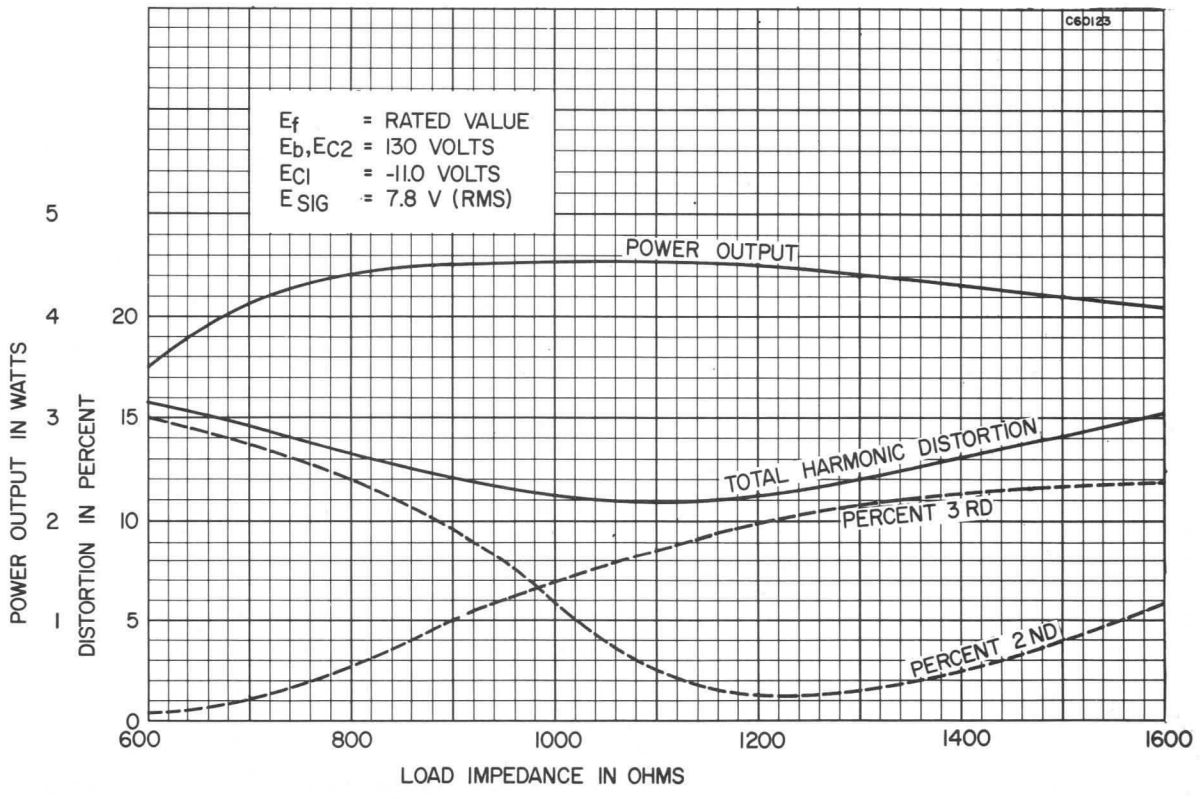

SINGLE ENDED PUSH-PULL CIRCUIT
(Transformerless)

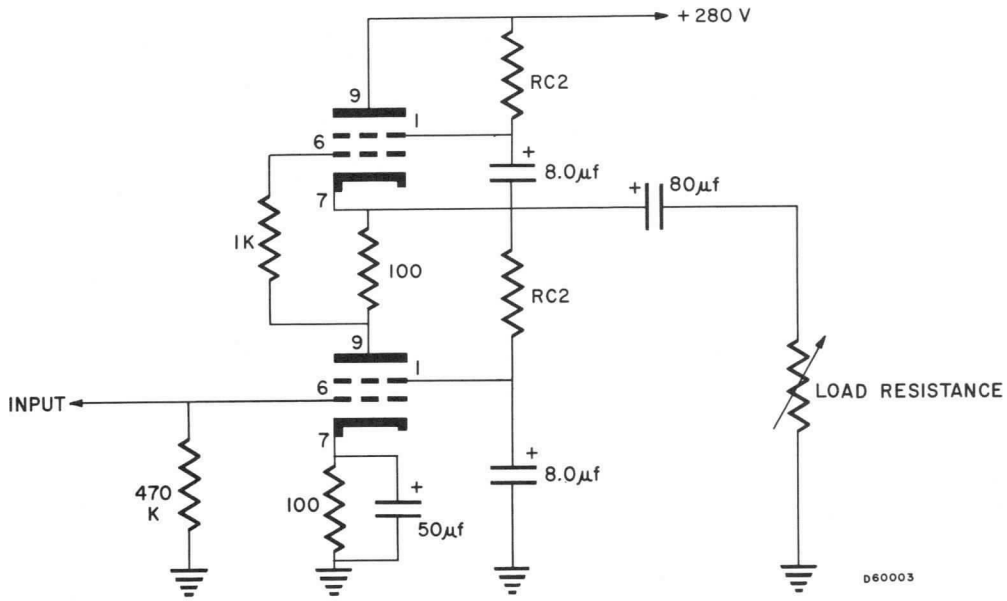

SINGLE ENDED PUSH-PULL
(Transformerless Operation (See Circuit))

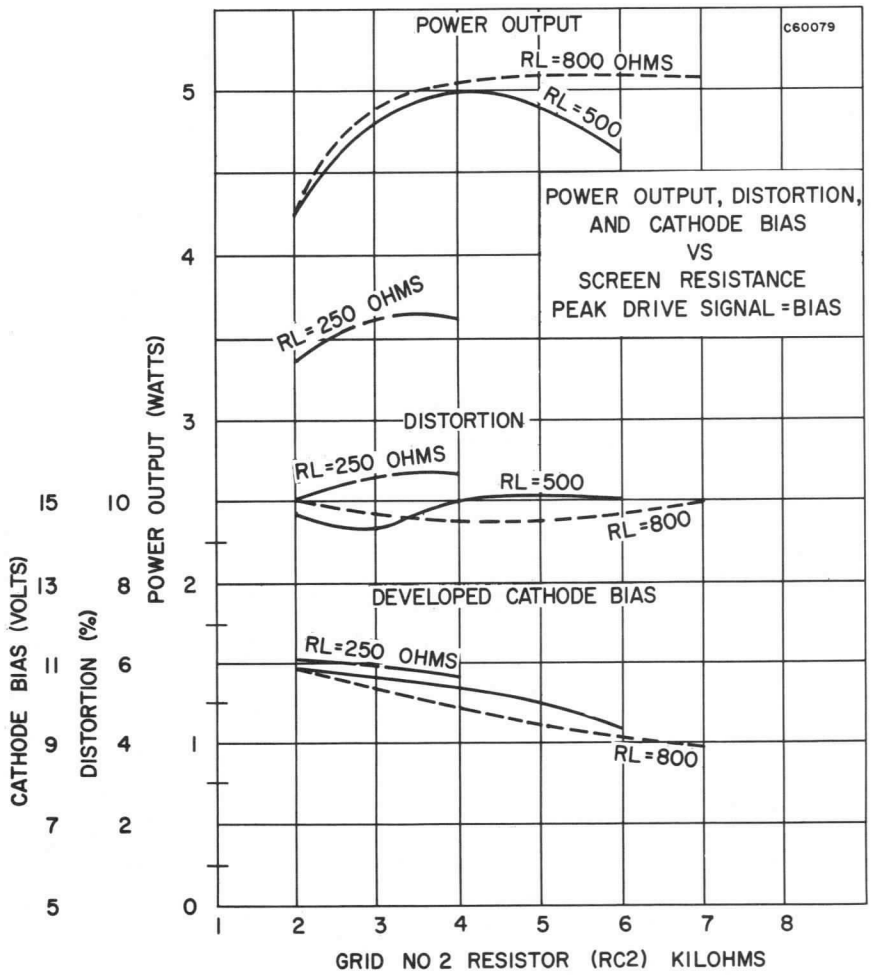

MECHANICAL DATA

Bulb	T-5½
Base	E7-1, Miniature Button 7-Pin
Outline	5-1
Basing	7DK
Cathode	Coated Unipotential
Mounting Position	Any

ELECTRICAL DATA

HEATER CHARACTERISTICS AND RATINGS

Characteristics

Heater Voltage[1]	6.3 Volts	
Heater Current[2]	225 Ma	
Ratings (Design Maximum Values)		
Heater Voltage[3]	6.3 ± 0.6 Volts	
Maximum Heater-Cathode Voltage		
Heater Negative with Respect to Cathode		
Total DC and Peak	200 Volts	Max.
Heater Positive with Respect to Cathode		
DC	100 Volts	Max.
Total DC and Peak	200 Volts	Max.

DIRECT INTERELECTRODE CAPACITANCES (Shielded)[4]

Grid to Plate	1.7 μμf
Input: g to (h+k)	3.0 μμf
Output: p to (h+k)	1.8 μμf
Heater to Cathode	3.0 μμf

RATINGS (Design Maximum Values)

Continuous Class C Service at 175 mc.

Plate Voltage	330 Volts	Max.
Plate Dissipation	5.0 Watts	Max.
Plate Input	7.5 Watts	Max.
Cathode Current[5]	40 mAdc	Max.
Grid Current[5]	10 mAdc	Max.
Negative Grid Voltage	50 Volts	Max.
Grid Circuit Resistance		
Fixed Bias	0.1 Megohm	Max.
Cathode Bias	0.5 Megohm	Max.

CHARACTERISTICS AND TYPICAL OPERATION

Plate Voltage	200 Volts
Grid Voltage	0 Volts
Cathode Bias Resistor	100 Ohms
Plate Current	12 Ma
Transconductance	9500 μmhos
Amplification Factor	80
Ec for Ib = 20 μAdc (Approx.)	−6.5 Volts

NOTES:

1. *For parallel operation of heaters, equipment should be designed that at normal supply voltage bogey tubes will operate at this value of heater voltage.*
2. *The bogey value of current is obtained when operating the heater at the specified 6.3 volts.*
3. *Heater voltage supply variations shall be restricted to maintain heater voltage within the specified tolerance.*
4. *Shield No. 316.*
5. *In Sonobouy or other battery applications where considerations of long life are secondary to those of power output, the maximum ratings for cathode current and grid current may be taken as 50 mAdc and 15 mAdc respectively.*

QUICK REFERENCE DATA

The Sylvania Type 7738 is a miniature high mu triode designed for Continuous Class C Amplifier Service in the 200 megacycle range.

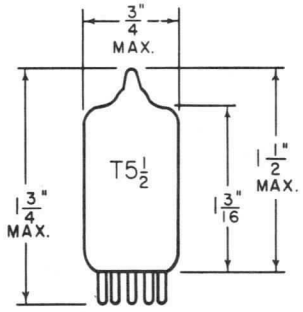

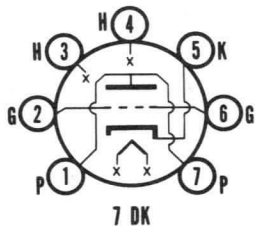

SYLVANIA
ELECTRONIC TUBES
A Division of
Sylvania Electric Products Inc.
RECEIVING TUBE
OPERATIONS
EMPORIUM, PA.

Prepared and Released By The
TECHNICAL PUBLICATIONS SECTION
EMPORIUM, PENNSYLVANIA

AUGUST, 1960

File Under
RECEIVING TUBES

AVERAGE PLATE CHARACTERISTICS

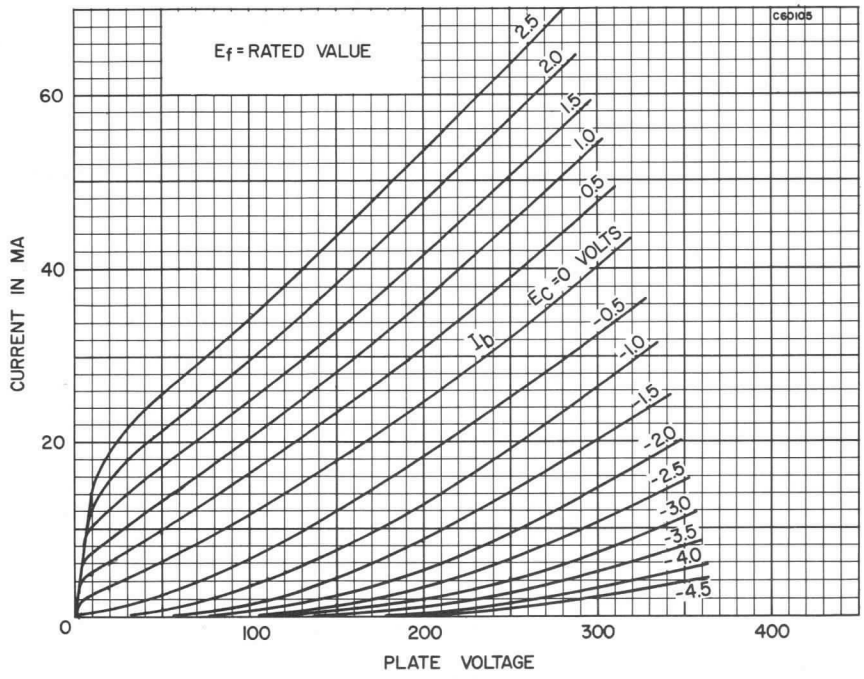

AVERAGE TRANSFER CHARACTERISTICS

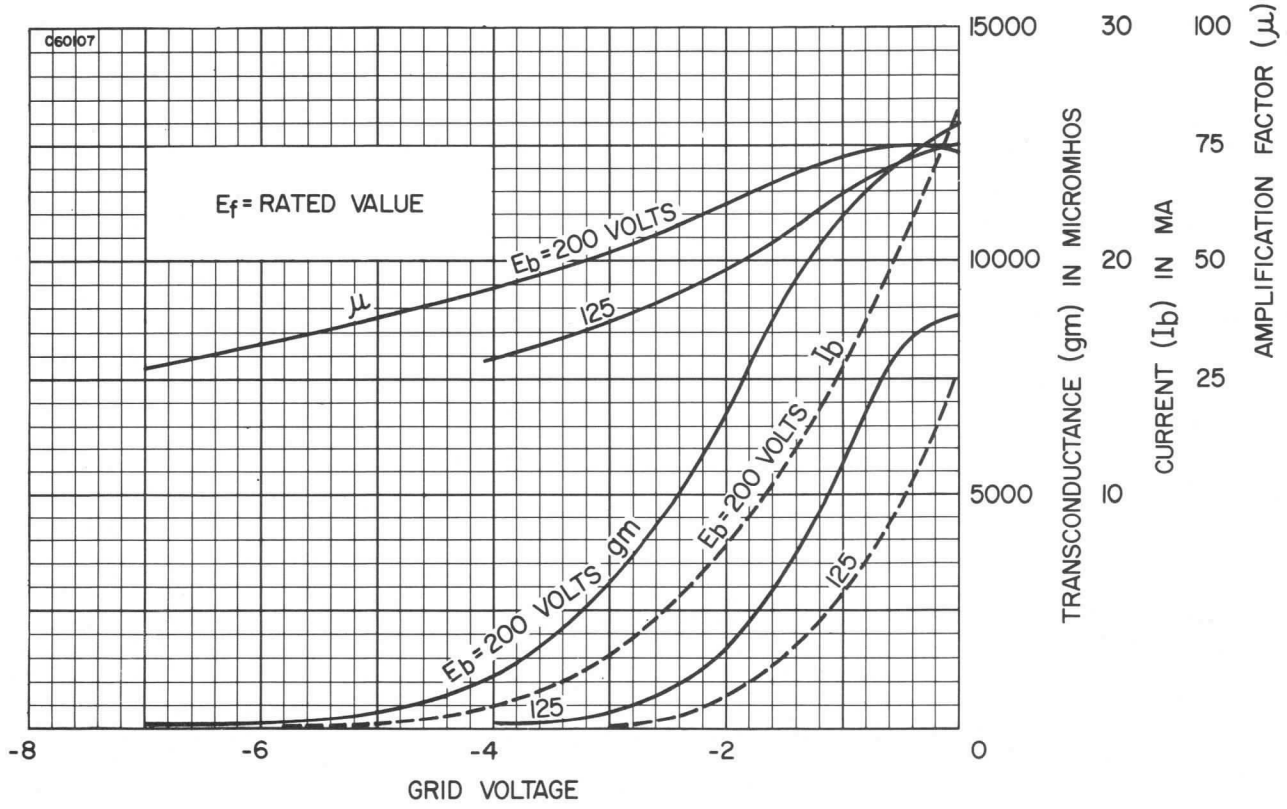

AVERAGE GRID CHARACTERISTICS

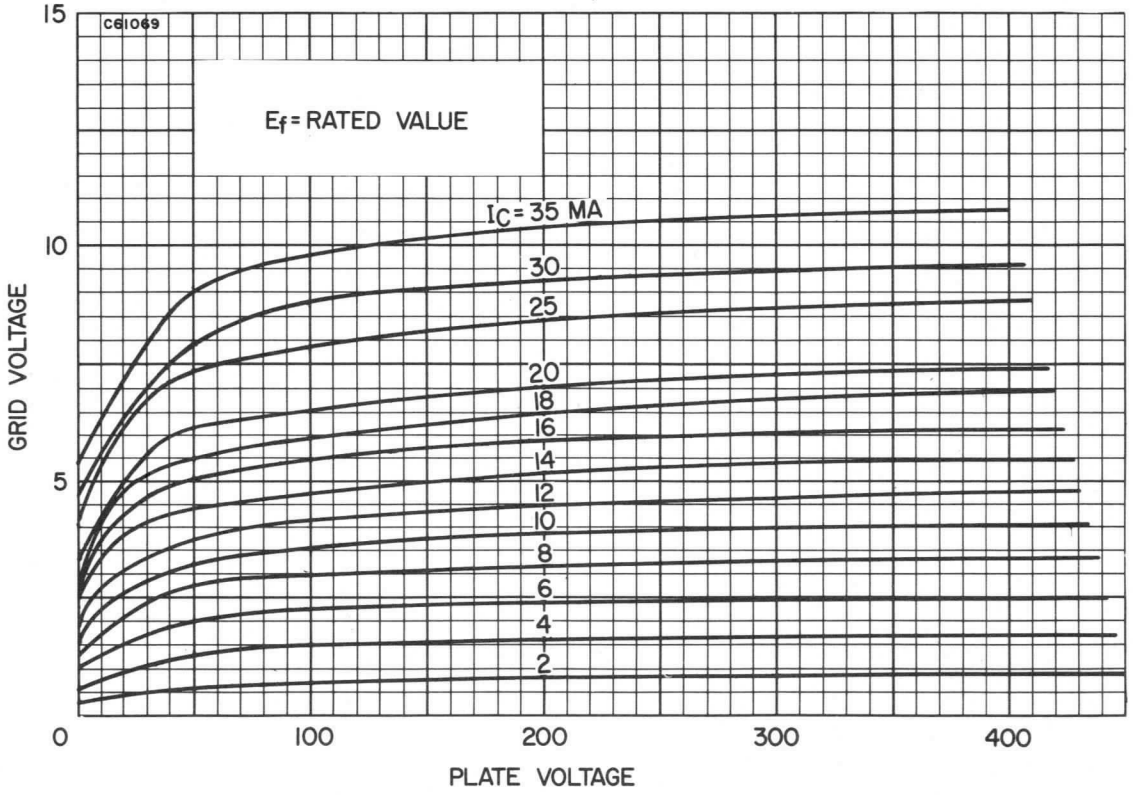

CONSTANT CURRENT CHARACTERISTICS

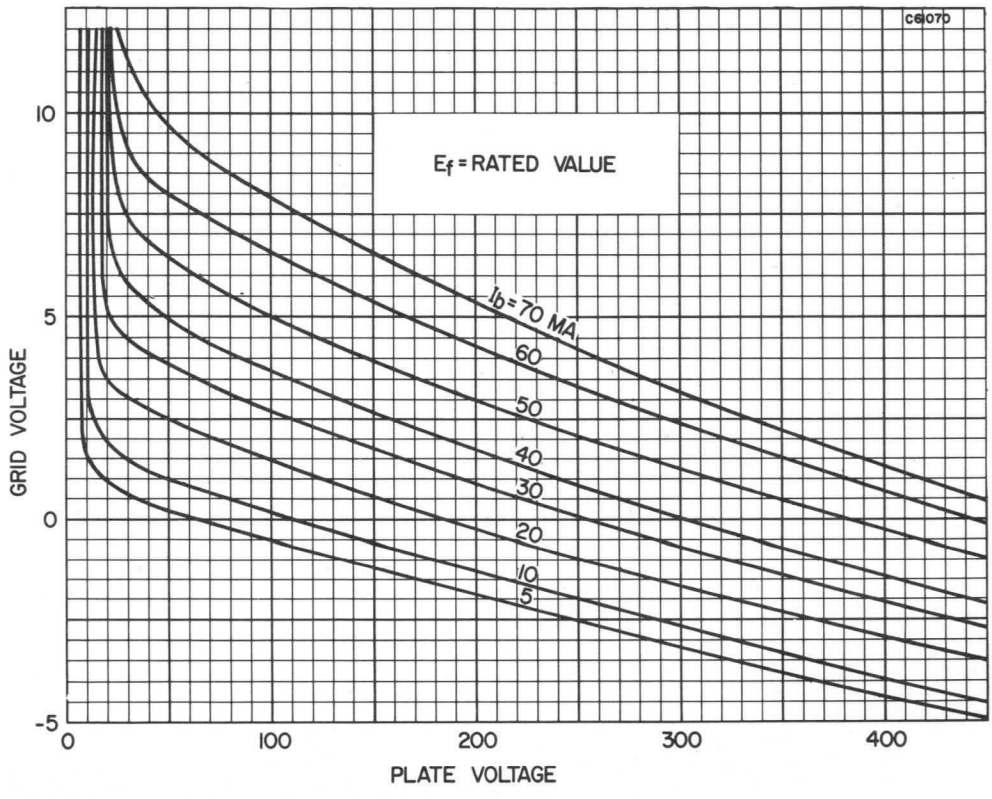

MECHANICAL DATA

Bulb	T-6½
Base	E9-1, Miniature Button 9-Pin
Outline	6-2
Basing	9AJ
Cathode	Coated Unipotential
Mounting Position	Any

ELECTRICAL DATA

HEATER CHARACTERISTICS AND RATINGS

Average Characteristics

Heater Operation	Parallel
Heater Voltage[1]	6.3 Volts
Heater Current	365 Ma

Ratings (Design Maximum Values)

	Min-Max
Heater Voltage[2]	5.7 - 6.9 Volts
Maximum Heater-Cathode Voltage	
Heater Negative with Respect to Cathode	
Total DC and Peak	200 Volts
Heater Positive with Respect to Cathode	
DC	100 Volts
Total DC and Peak	200 Volts

DIRECT INTERELECTRODE CAPACITANCES (Each Section)

	Shielded	Unshielded
Grid to Plate	1.4	1.4 pf
Input: g to (h + k)	3.3	3.3 pf
Output: p to (h + k)	2.5	1.8 pf
Grid to Grid (Max.)	.005	.005 pf
Plate to Plate (Max.)	.015	.045 pf

RATINGS (Design Maximum Values)

Continuous Class C Service at 175 mc[4]

Plate Voltage	200 Volts	Max.
Plate Dissipation (Each Plate)	3.5 Watts	Max.
Plate Dissipation (Both Plates)	7.0 Watts	Max.
Plate Input (Each Plate)	5.5 Watts	Max.
Cathode Current (Each Cathode)	30 mAdc	Max.
Grid Current (Each Grid)	2.5 mAdc	Max.
Negative Grid Voltage	75 Volts	Max.
Grid Circuit Resistance		
Fixed Bias	0.1 Megohm	Max.
Cathode Bias	0.5 Megohm	Max.

CHARACTERISTICS AND TYPICAL OPERATION

Class A1 Amplifier

Plate Voltage	90 Volts
Grid Voltage	−1.3 Volts
Plate Current	15 Ma
Transconductance	12,500 μmhos
Amplification Factor	33

Class-C RF Frequency Multiplier	Doubler to 175 Mc
Plate Voltage	160 Volts
For Grid Voltage	−70 Volts
Use Grid Resistor	33,000 Ohms
Peak RF Grid Voltage	77 Volts
Grid Current	2.5 Ma
Plate Current	26 Ma
Power Output[5] (Approx.)	1.0 Watt

QUICK REFERENCE DATA

The Sylvania Type 7803 is a T-6½ medium mu double triode designed for Continuous Class C Amplifier Service in the 200 megacycle range.

The rating values apply specifically to Sonobouy and other battery applications where considerations of power output are paramount, and considerations of long life are of lesser importance.

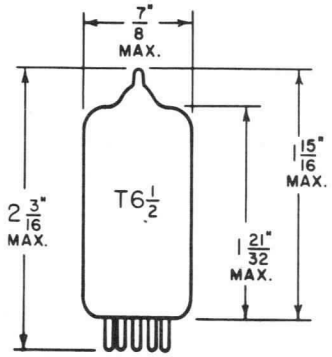

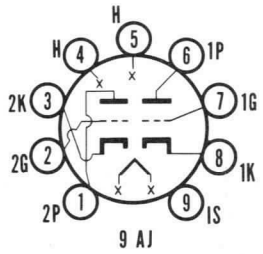

SYLVANIA
ELECTRONIC TUBES
A Division of
Sylvania Electric Products Inc.
RECEIVING TUBE
OPERATIONS
EMPORIUM, PA.
Prepared and Released By The
TECHNICAL PUBLICATIONS SECTION
EMPORIUM, PENNSYLVANIA
JUNE, 1963

File Under
RECEIVING TUBES

NOTES:

1. *For parallel operation of heaters, equipment should be designed that at normal supply voltage bogey tubes will operate at this value of heater voltage.*
2. *Heater voltage supply variations shall be restricted to maintain heater voltage within the specified values.*
3. *Shield No. 315.*
4. *The rating values apply specifically to Sonobouy and other battery applications where considerations of power output are paramount, and considerations of long life are of lesser importance.*
5. *These values are for useful power and are measured at the load of the output circuit.*
6. *To insure satisfactory operation in sonobouy applications Type 7803 is subjected to and must successfully pass an impact acceleration test at an acceleration level of 500 G.*

AVERAGE PLATE CHARACTERISTICS

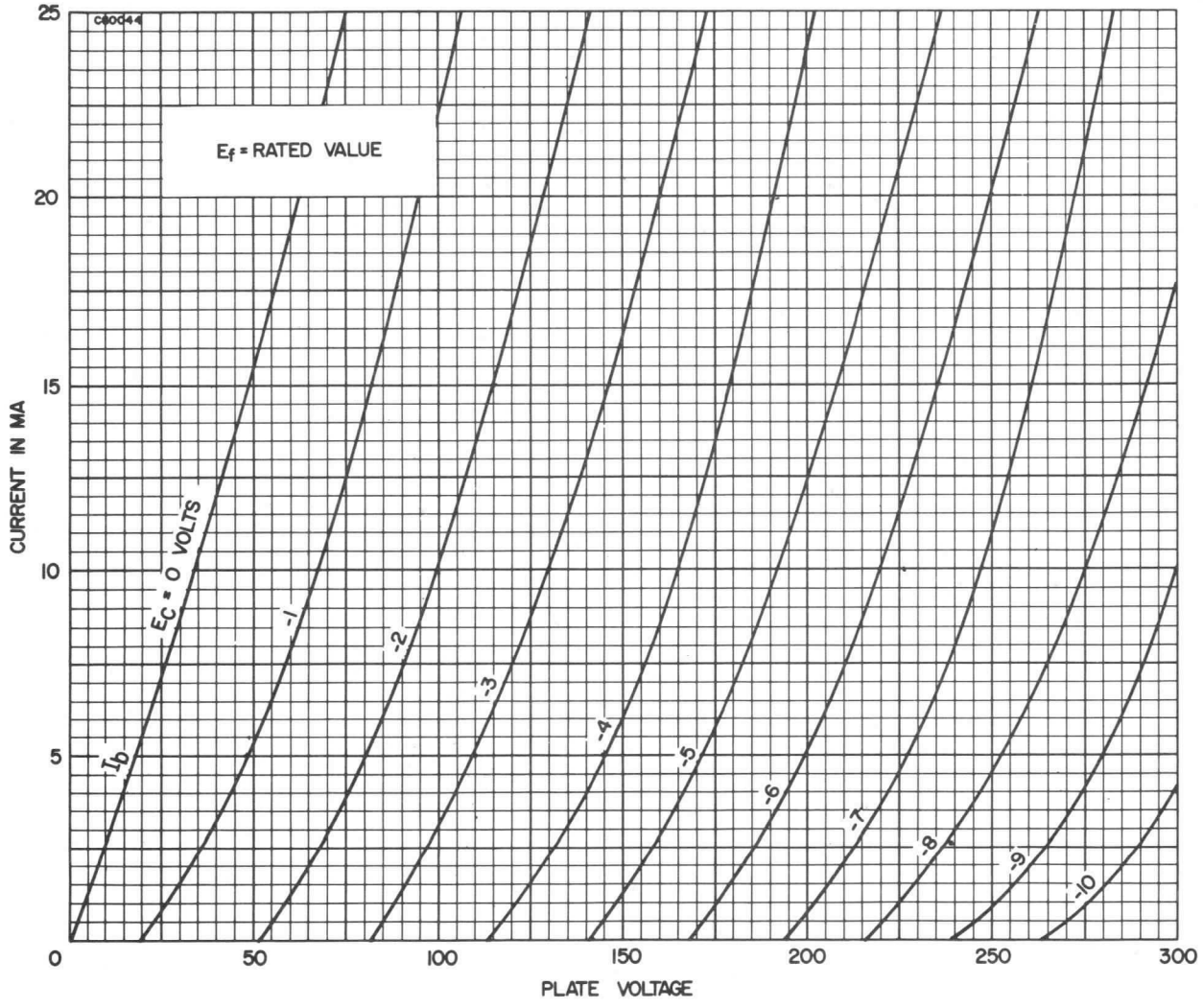

AVERAGE PLATE CHARACTERISTICS

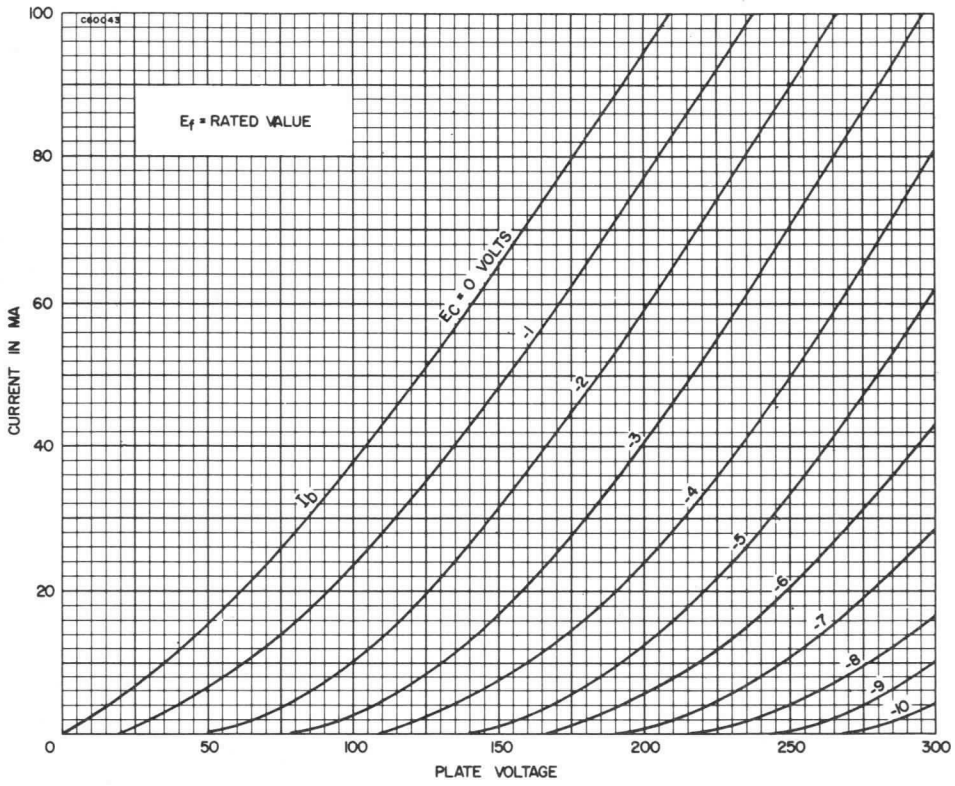

AVERAGE TRANSFER CHARACTERISTICS

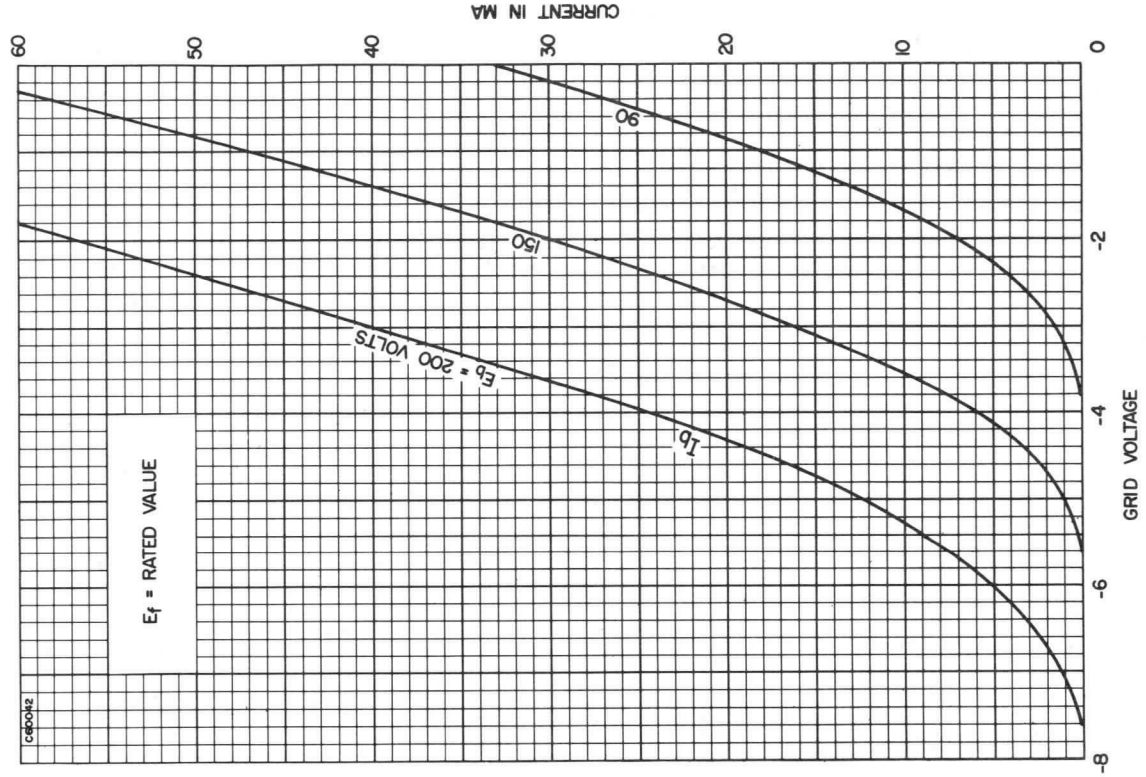

AVERAGE TRANSFER CHARACTERISTICS

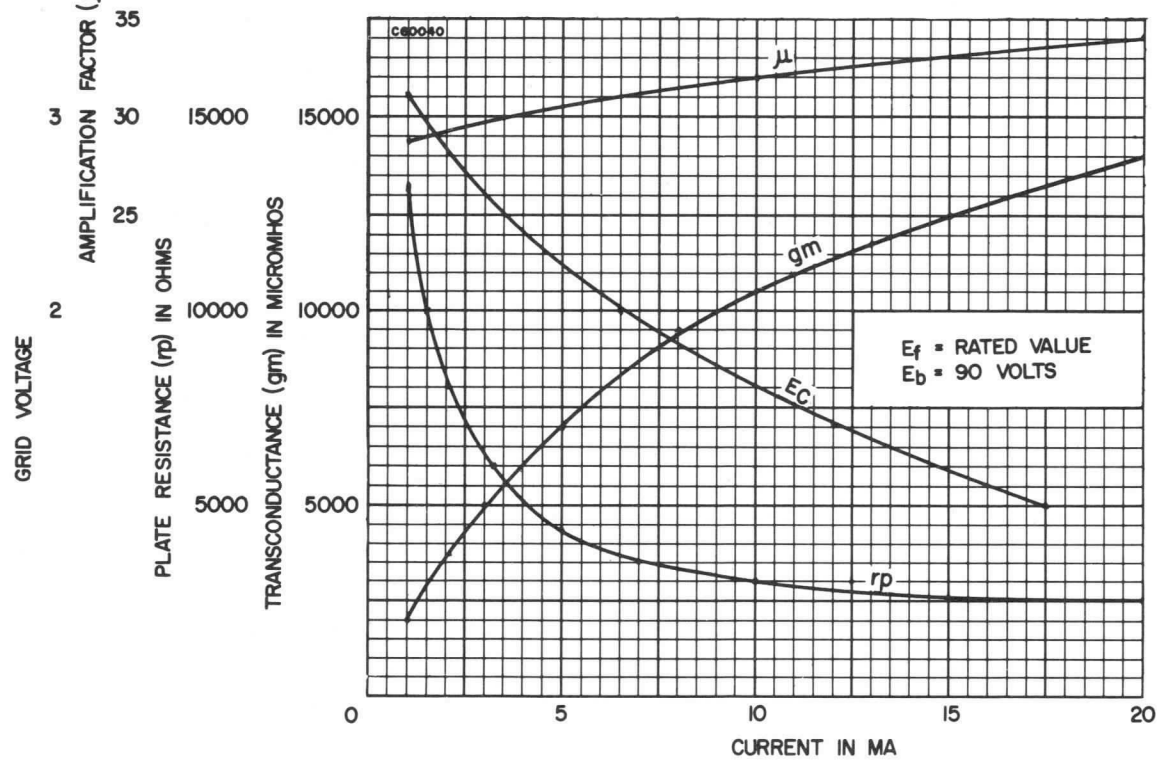

AVERAGE TRANSFER CHARACTERISTICS

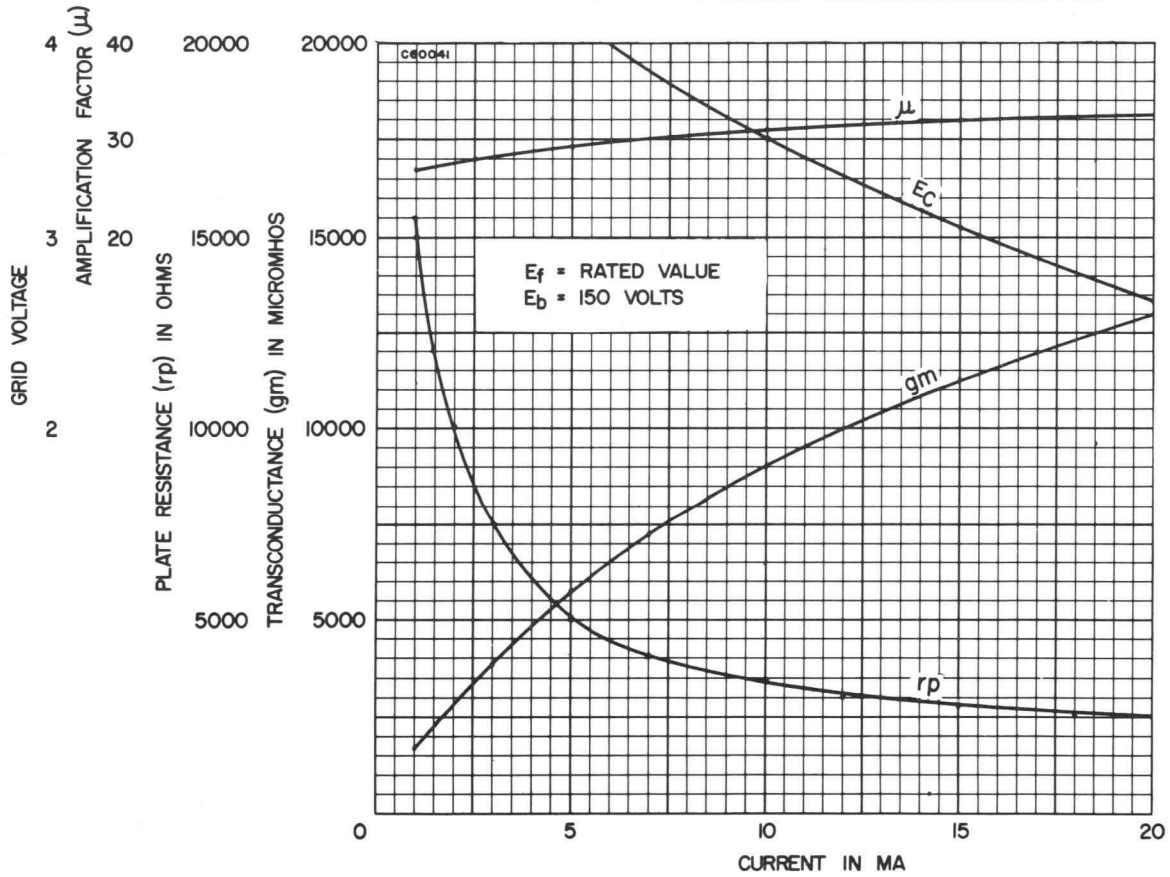

CONSTANT PLATE CURRENT CHARACTERISTICS

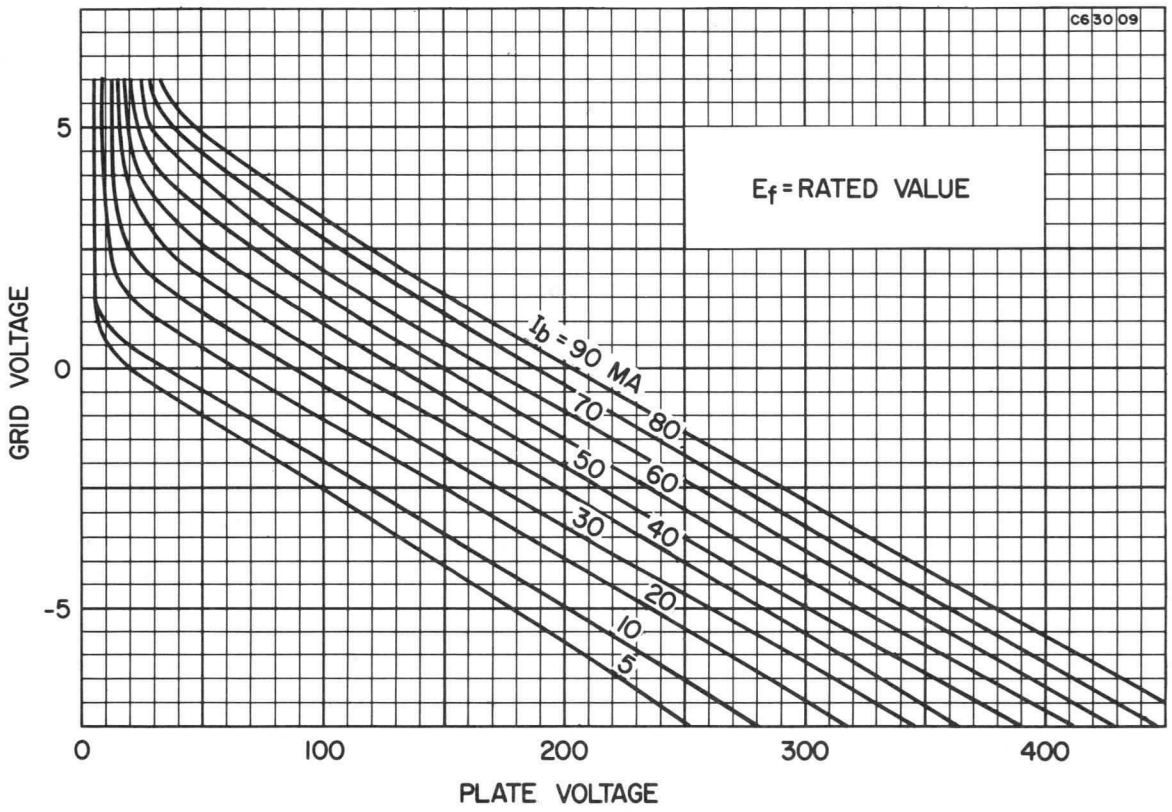

CONSTANT GRID CURRENT CHARACTERISTICS

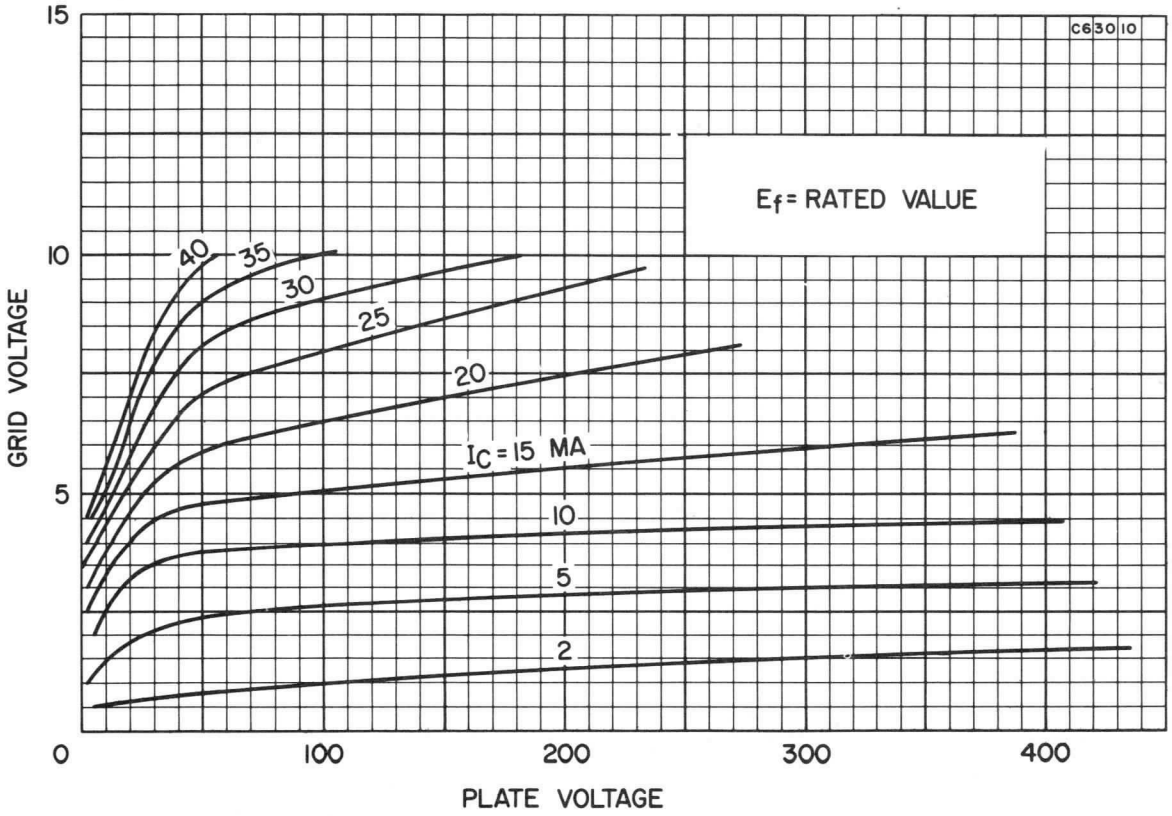

MECHANICAL DATA

Bulb	T-9
Base	Small Button Novar 9-Pin E9-75 (B7-233 or B8-142)
Outline	9-85
Basing	9NZ
Cathode	Coated Unipotential
Mounting Position	Any

ELECTRICAL DATA

HEATER CHARACTERISTICS AND RATINGS

Average Characteristics

Heater Operation	Parallel
Heater Voltage[1]	6.3 Volts
Heater Current	800 Ma

Ratings (Design Maximum Values)[3]

	Min-Max
Heater Voltage[2]	5.7 - 6.9 Volts
Maximum Heater-Cathode Voltage	
Heater Negative with Respect to Cathode	
Total DC and Peak	200 Volts
Heater Positive with Respect to Cathode	
DC	100 Volts
Total DC and Peak	200 Volts

DIRECT INTERELECTRODE CAPACITANCES (Unshielded)

Grid No. 1 to Plate	0.15 pf
Input	11 pf
Output	4.4 pf

RATINGS (Design Maximum Values)[3]

Plate Voltage	550 Volts
Grid No. 2 Voltage	440 Volts
Plate Dissipation	19 Watts
Grid No. 2 Dissipation[4]	3.3 Watts
Cathode Current	90 Ma
Grid No. 1 Circuit Resistance	
Fixed Bias	0.3 Megohms
Self Bias	1.0 Megohms

CHARACTERISTICS AND TYPICAL OPERATION

	Pentode Operation S.T.—Class A1 Amp	Ultra-Linear Operation Class AB1—Push-Pull	
Plate Voltage	300	400	425 Volts
Grid No. 2 Voltage	300	Note 5	Note 5
Grid No. 1 Voltage	−10	−20.5	— Volts
Cathode Resistor	—	—	185 Ohms
Peak AF Grid Voltage	10	41	42 Volts
Zero Signal Plate Current	60	60	88 Ma
Max. Signal Plate Current	75	115	100 Ma
Zero Signal Grid No. 2 Current	8	8	12 Ma
Max. Signal Grid No. 2 Current	15	18	16 Ma
Transconductance	10.2K	—	— μmhos
Plate Resistance (Approx.)	29K	—	— Ohms
Load Resistance	3K	—	— Ohms
Load Resistance (PL to PL)	—	6600	6600 Ohms
Power Output	11	23	21 Watts
Total Harmonic Distortion	13	2.5	3.5 Percent

QUICK REFERENCE DATA

The 7868 is a power pentode contained in a T-9 bulb with a 9-pin Novar base. It is designed for output stages in high fidelity audio amplifiers and can furnish relatively high power output, with low distortion.

In Push-Pull Class AB1 applications, two 7868's can deliver a maximum signal power of 44 watts, with 5 % total harmonic distortion.

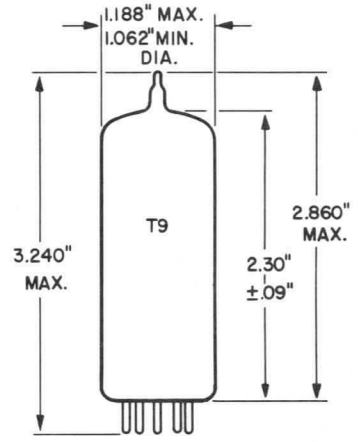

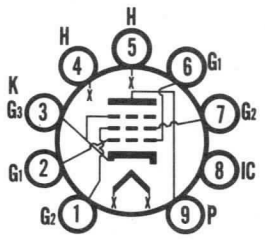

9NZ

SYLVANIA
ELECTRONIC TUBES
A Division of
Sylvania Electric Products Inc.
RECEIVING TUBE
OPERATIONS
EMPORIUM, PA.
Prepared and Released By The
TECHNICAL PUBLICATIONS SECTION
EMPORIUM, PENNSYLVANIA
JUNE, 1963

File Under
RECEIVING TUBES

CHARACTERISTICS AND TYPICAL OPERATION (Continued)

Pentode Operation (Class AB1 Push-Pull Amp.)

Plate Voltage	300	350	400	450	450	450 Volts
Grid No. 2 Voltage	300	350	350	350	400	400 Volts
Grid No. 1 Voltage	−12.5	−15.5	−16	−16.5	−21	— Volts
Cathode Resistor	—	—	—	—	—	170 Ohms
Peak AF Grid to Grid Voltage	25	31	32	33	42	31 Volts
Zero Signal Plate Current	74	72	64	60	40	86 Ma
Max. Signal Plate Current	116	130	135	142	145	94 Ma
Zero Signal Grid No. 2 Current	10	9.5	8	7.2	5	10 Ma
Max. Signal Grid No. 2 Current	28	32	28	26	30	20 Ma
Load Resistance (PL to PL)	6600	6600	6600	6600	6600	10,000 Ohms
Power Output	24	30	34	38	44	28 Watts
Total Harmonic Distortion	5	2.5	2	2.5	5	2 Percent

NOTES:

1. *For parallel operation of heaters, equipment should be designed that at normal supply voltage bogey tubes will operate at this value of heater voltage.*
2. *Heater voltage supply variations shall be restricted to maintain heater voltage within the specified values.*
3. *Design Maximum Ratings are limiting values of operating and environmental conditions applicable to a bogey electron tube of a specified type as defined by its published data and should not be exceeded under the worst probable conditions.*
   The tube manufacturer chooses these values to provide acceptable serviceability of the tube, making allowance for the effects of changes in operating conditions due to variations in the characteristics of the tube under consideration.
   The equipment manufacturer should design so that initially and throughout life no design maximum value for the intended service is exceeded with a bogey tube under the worst probable operating conditions with respect to supply voltage variation, equipment component variation, equipment control adjustment, load variation, signal variation, environmental conditions, and variations in the characteristics of all other electron devices in the equipment.
4. *Grid No. 2 Dissipation may be permitted to reach 6 watts during the periods of maximum input of speech and music signals. For efficient operation of Grid No. 2, the two Grid No. 2 connections, Pins 1 and 7, should be externally tied together.*
5. *Grid No. 2 tapped from the primary winding of output transformer, in a manner to apply 50 % of plate signal to G2 of each tube.*

AVERAGE PLATE CHARACTERISTICS

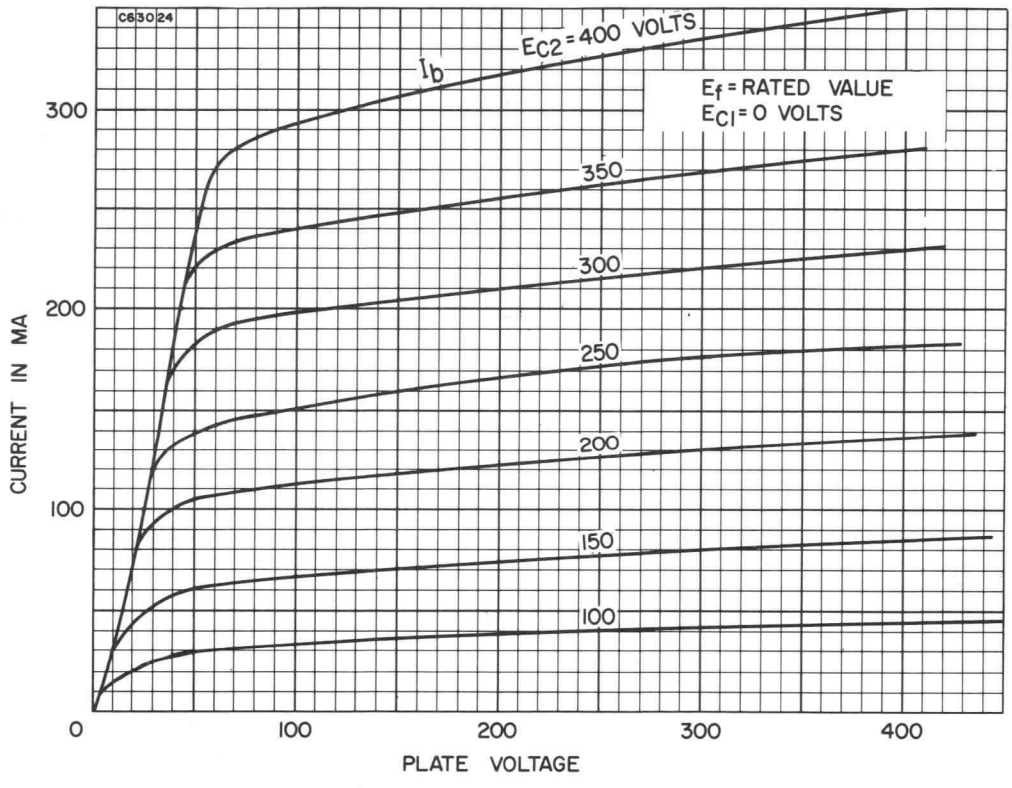

AVERAGE PLATE CHARACTERISTICS

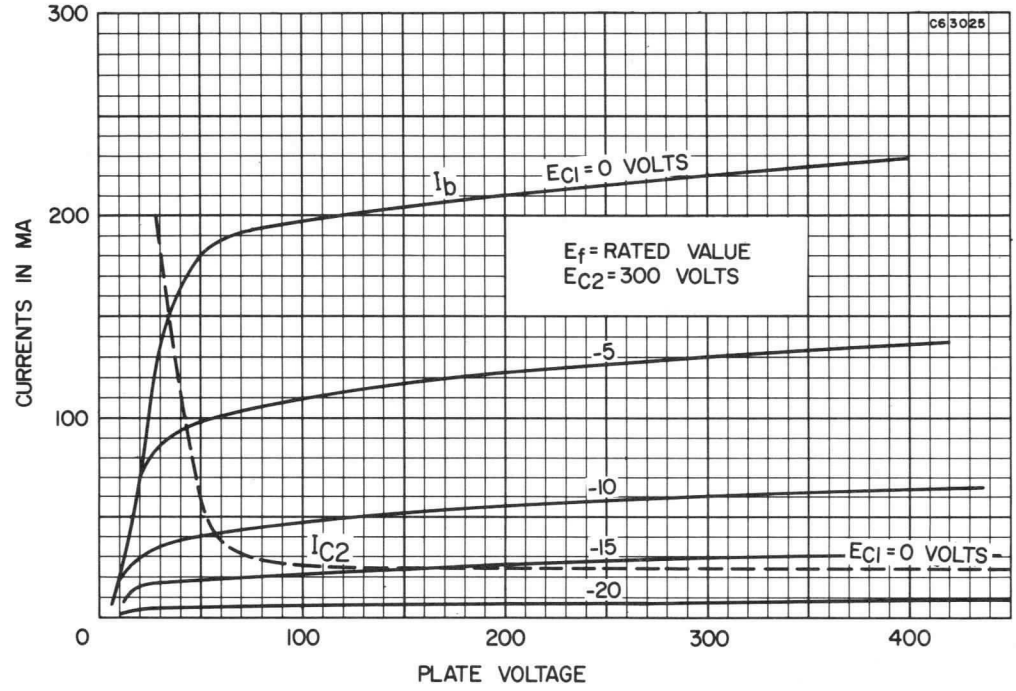

POWER OUTPUT AND DISTORTION

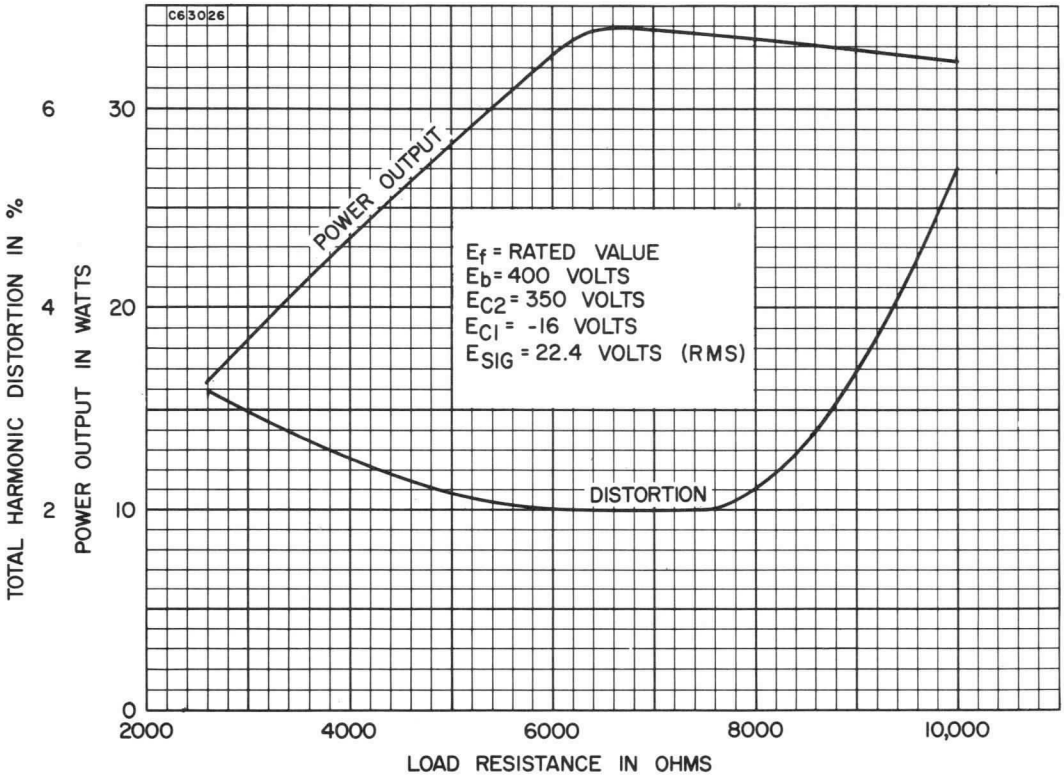

MECHANICAL DATA

Bulb	T-5 ½
Base	E7-1, Miniature Button 7-Pin
Outline	5-1
Basing	7DK
Cathode	Coated Unipotential
Mounting Position	Any

RATINGS[1]

Operational Altitude	80,000 Ft.
Radiation Environment	
Total Dosage—(Neutrons/Sq. Cm)	10^{16} nvt
Dose Rate —(Neutrons/Sq. Cm/Sec.)	10^{12} nv

DURABILITY CHARACTERISTICS[2]

Impact Acceleration[3]	500 G
Vibration Acceleration for an Extended Period[4]	2.5 G
On-Off Heater Cycles[5]	2000

ELECTRICAL DATA

HEATER CHARACTERISTICS

Heater Voltage	6.3 Volts
Heater Current	225 mA
Maximum Heater-Cathode Voltage	100 Volts

CONTROLLED DETRIMENTS

Minimum Interelectrode Insulation[6]	100 Megohms
Maximum Total Grid Current[7]	−1.5 μAdc
Maximum Vibration Output as Equivalent Grid Voltage[8]	3.0 mVac
Maximum Heater-Cathode Leakage[9]	10 μAdc

DIRECT INTERELECTRODE CAPACITANCES

	Shielded[10]	Unshielded
Grid to Plate	1.7	1.7 pf
Input: g to (h+k+sld)	3.3	2.9 pf
Output: p to (h+k+sld)	1.8	0.25 pf
Grounded Grid		
Input: k to (g+h+sld)	5.2	5.5 pf
Output: p to (g+h+sld)	3.0	1.8 pf
Heater to Cathode	2.9	3.0 pf

RATINGS[1] (Absolute Maximum Values)

Heater Voltage Variation	±10 % Volts
Plate Voltage	330 Vdc
Average Cathode Current	33 mAdc
Plate Dissipation	4.4 Watts
Grid Circuit Resistance	1.0 Megohm

AVERAGE CHARACTERISTICS

Conditions	
Heater Voltage	6.3 V
Plate Voltage	200 Vdc
Grid Voltage	0 Vdc
Cathode Resistor	100 Ohms
Plate Current	18 mAdc
Transconductance	10,750 μmhos
Amplification Factor	55
Grid Voltage for Ib = 20 μA (Approx.)	−7.0 Vdc

QUICK REFERENCE DATA

The Sylvania Type 8334 is a miniature high mu triode designed for use as a grounded grid amplifier in UHF applications. The tube is manufactured and inspected to meet the applicable Mil-E-1 specification.

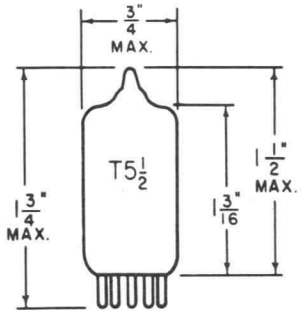

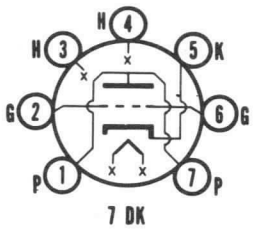

7 DK

SYLVANIA
ELECTRONIC TUBES

A Division of
Sylvania Electric Products Inc.

RECEIVING TUBE
OPERATIONS

EMPORIUM, PA.

Prepared and Released By The
TECHNICAL PUBLICATIONS SECTION
EMPORIUM, PENNSYLVANIA

APRIL, 1963

File Under
RECEIVING TUBES

NOTES:

1. *Limiting values beyond which normal tube life and normal tube performance may be impaired.*
2. *Tests performed as a measure of the mechanical durability of the tube structure.*
3. *Force as applied in any direction by the Navy Type High Impact (Flyweight) Shock Machine for Electronic Devices. Shock duration = ¾ milliseconds.*
4. *Vibrational forces applied in any direction for a period of 96 hours.*
5. *One cycle consists of the application of Ef = 7.5 V for one minute and interruption of the filament voltage for four minutes. A voltage of Ehk = 140 Vac is applied continuously.*
6. *Measure with Ef = 6.3 V Eg-all = −100 Vdc; Ep-all = −300 Vdc; Cathode is positive so that no cathode emission occurs.*
7. *Measure with Ef = 6.3 V; Eb = 250 Vdc; Ec = 0 Vdc; Rk = 250 Ohms.*
8. *Test with Ef = 6.3 V; Eb = 200 Vdc; Ec = 0 Vdc; Rk = 100 Ohms; Rp = 2,000 Ohms; F = 25 cps; Acc = 2.5 G; Ck = 1,000 μf.*
9. *Measure with Ef = 6.3 V; Ehk = ±100 Vdc.*
10. *Capacitances are measured with External Shield No. 316.*

AVERAGE PLATE CHARACTERISTICS

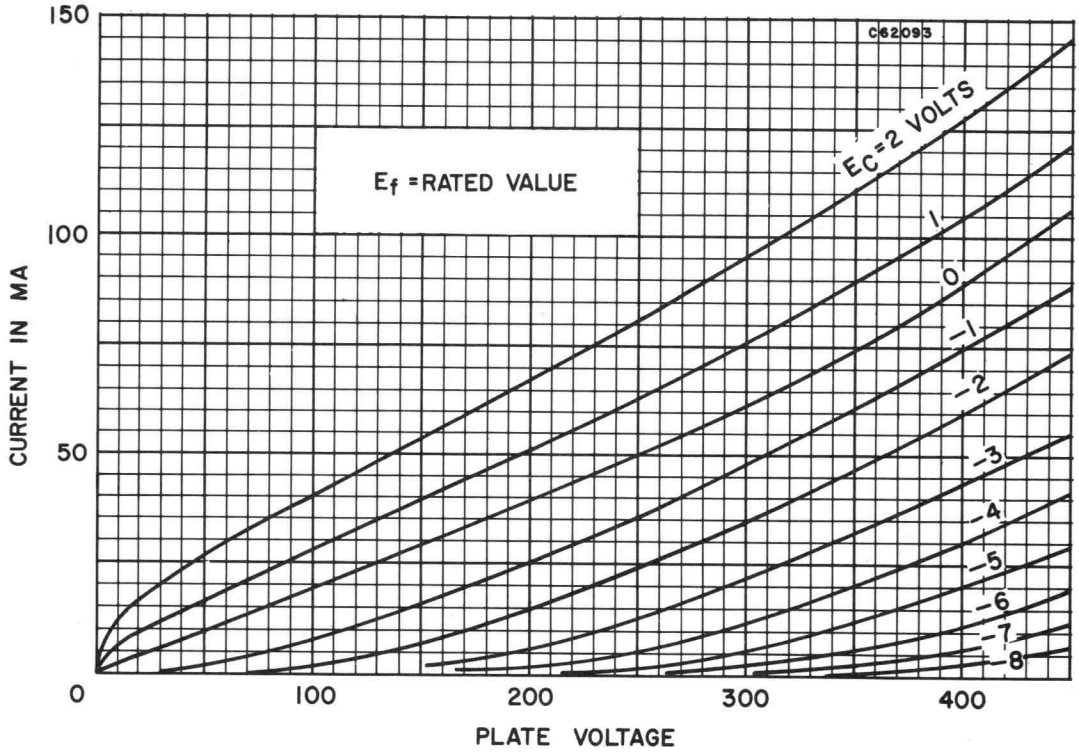

AVERAGE TRANSFER CHARACTERISTICS

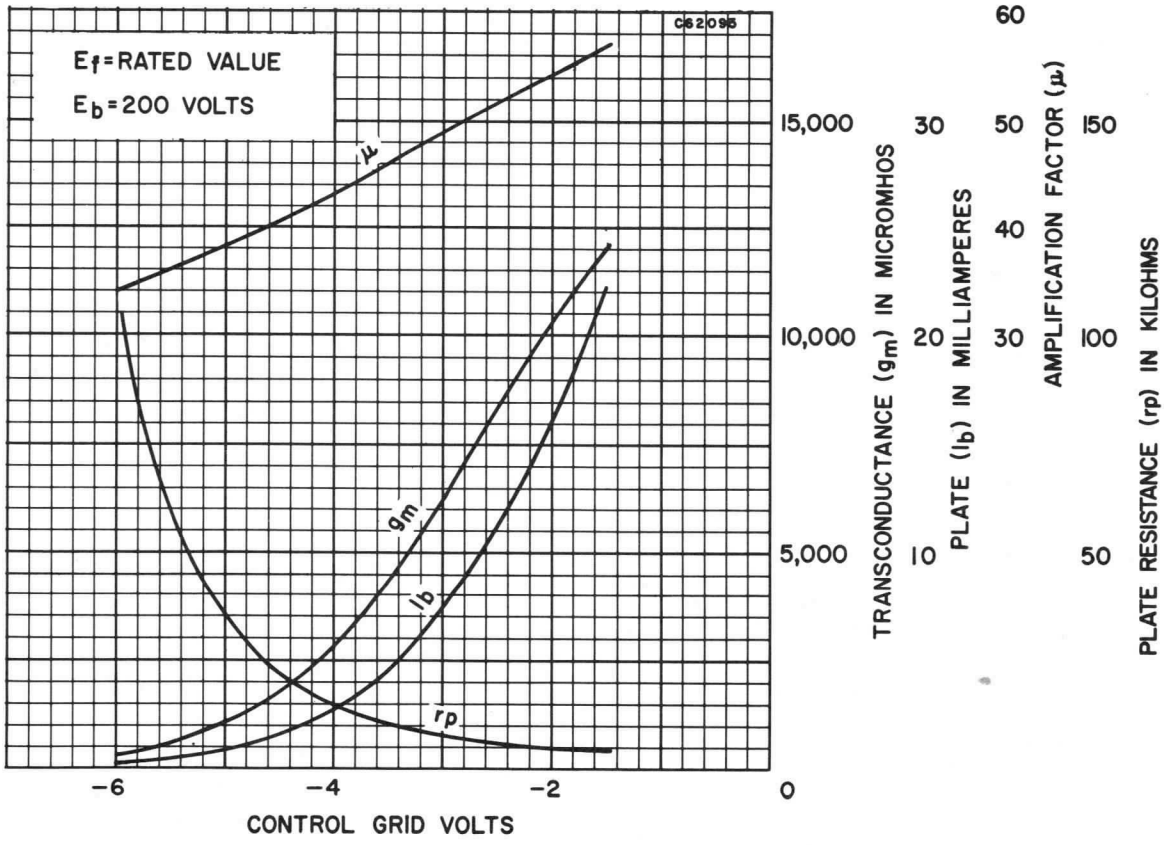

MECHANICAL DATA

Bulb	T-12
Base	Short Shell Octal 6-Pin
Outline	See Drawing
Basing	Modified 7S
Mounting Position	Any
Cathode	Coated Unipotential

ELECTRICAL DATA

HEATER CHARACTERISTICS

Heater Voltage	6.3 Volts
Heater Current	1600 Ma
Maximum Heater-Cathode Voltage	
Heater Negative with Respect to Cathode	
Total DC and Peak	200 Volts
Heater Positive with Respect to Cathode	
DC	100 Volts
Total DC and Peak	200 Volts

DIRECT INTERELECTRODE CAPACITANCES

Grid No. 1 to Plate	0.9 pf
Input	22 pf
Output	9.0 pf

RATINGS (Design Maximum Values)

Plate Voltage	660 Volts	Max.
Grid No. 2 Voltage	500 Volts	Max.
Plate Dissipation[1]	35 Watts	Max.
Grid No. 2 Dissipation[2]	5 Watts	Max.
Cathode Current	200 Ma	Max.
Grid No. 1 Circuit Resistance		
Fixed Bias	0.1 Megohm	Max.
Cathode Bias	0.25 Megohms	Max.

AVERAGE CHARACTERISTICS

Plate Voltage	300 Volts
Grid No. 2 Voltage	300 Volts
Grid No. 1 Voltage	−12 Volts
Plate Current	100 Ma
Grid No. 2 Current	5.5 Ma
Transconductance	23,000 μmhos
Plate Resistance	16,000 Ohms
Amplification Factor (Triode Connected)	16.5
Grid Voltage for Ib = 1 Ma	−37 Volts

TYPICAL OPERATION

Class AB1 Ultra-Linear Push-Pull[3]

	Values for 2 Tubes
Plate Supply Voltage	445 Volts
Grid No. 1 Voltage	−25 Volts
Peak AF Grid to Grid Voltage	45 Volts
Zero Signal Plate Current	146 Ma
Maximum Signal Plate Current	314 Ma
Effective Load (Plate to Plate)	3500 Ohms
Total Harmonic Distortion	2.5 Percent
Maximum Signal Power Output	70 Watts

QUICK REFERENCE DATA

The Sylvania Type 8417 is a beam-power pentode featuring a T-12 bulb and an octal 6-pin base. It is intended for service in high power, high-fidelity audio equipments and is capable of 100 watts output in push-pull circuitry. It also finds application as a regulator tube.

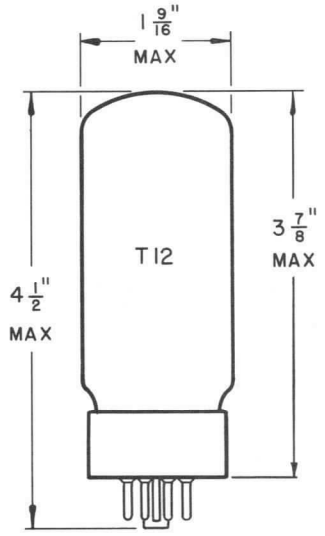

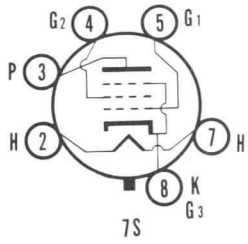

SYLVANIA ELECTRIC PRODUCTS INC.

Electronic Components Group
ELECTRONIC TUBE DIVISION
EMPORIUM, PA.

A Technical Publication

MAY, 1965

PAGE 1 OF 4

File Under

RECEIVING TUBES

TYPICAL OPERATION (Cont'd)

Class AB1 Pentode Connected

	Values for 2 Tubes	
Plate Supply Voltage	400	560 Volts
Grid No. 2 Supply Voltage	275	300 Volts
Grid No. 1 Voltage	−13	−15 Volts
Peak AF Grid to Grid Voltage	24	29 Volts
Zero Signal Plate Current	150	124 Ma
Maximum Signal Plate Current	294	290 Ma
Zero Signal Screen Current	4.4	3.6 Ma
Maximum Signal Screen Current	34	39 Ma
Effective Load (Plate to Plate)	2800	4200 Ohms
Total Harmonic Distortion	2.5	2.5 Percent
Maximum Signal Power Output	65	100 Watts

NOTES:

1. *It is essential to maintain free circulation of air around the tube for proper cooling.*
2. *Grid No. 2 dissipation may reach 8 watts during intervals of maximum speech and music signals.*
3. *Screen tapped at 40 % of primary turns. Plate current includes screen current.*

AVERAGE PLATE CHARACTERISTICS

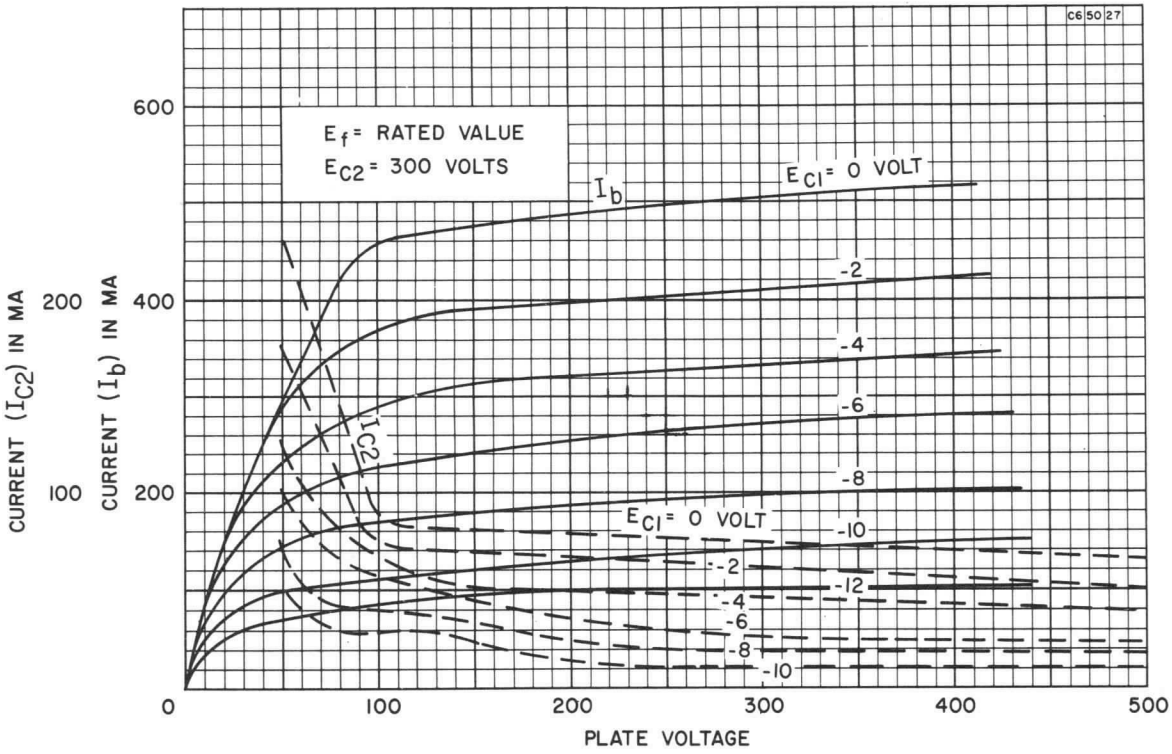

AVERAGE PLATE CHARACTERISTICS

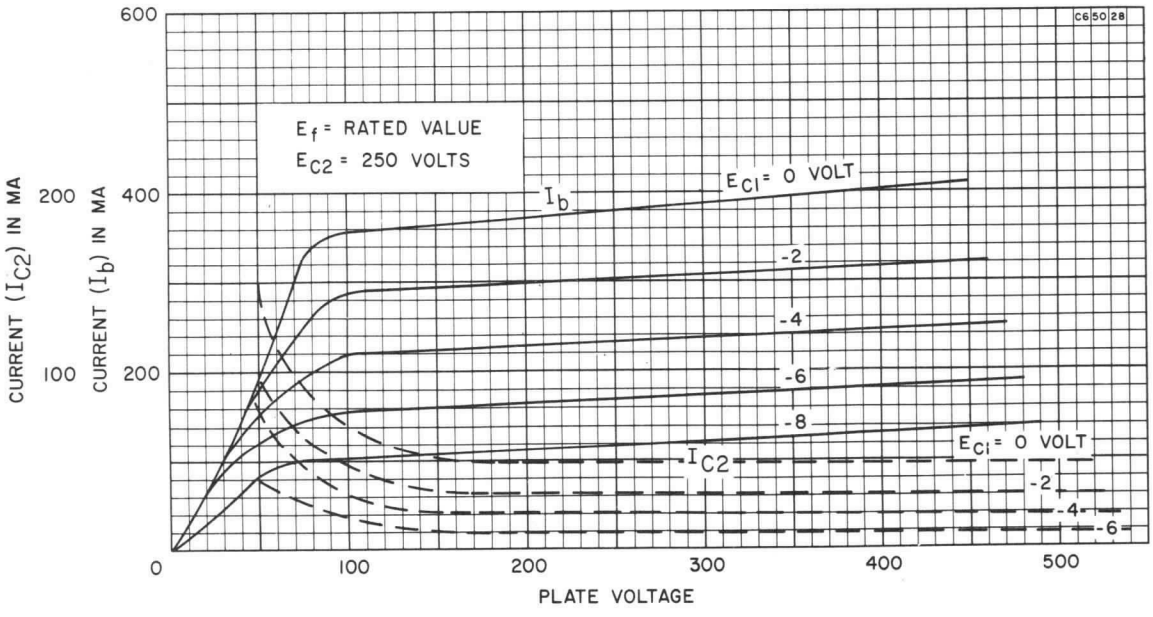

AVERAGE TRANSFER CHARACTERISTICS

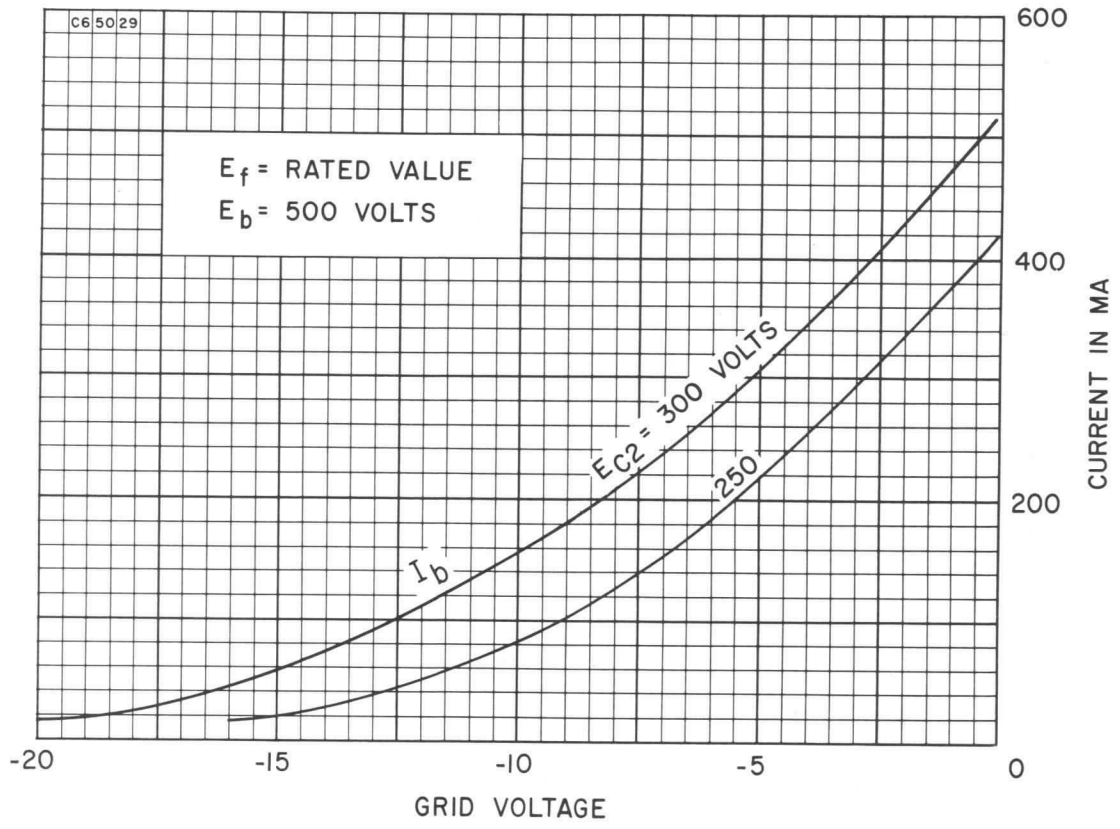

AVERAGE PLATE CHARACTERISTICS

(Triode Connected)

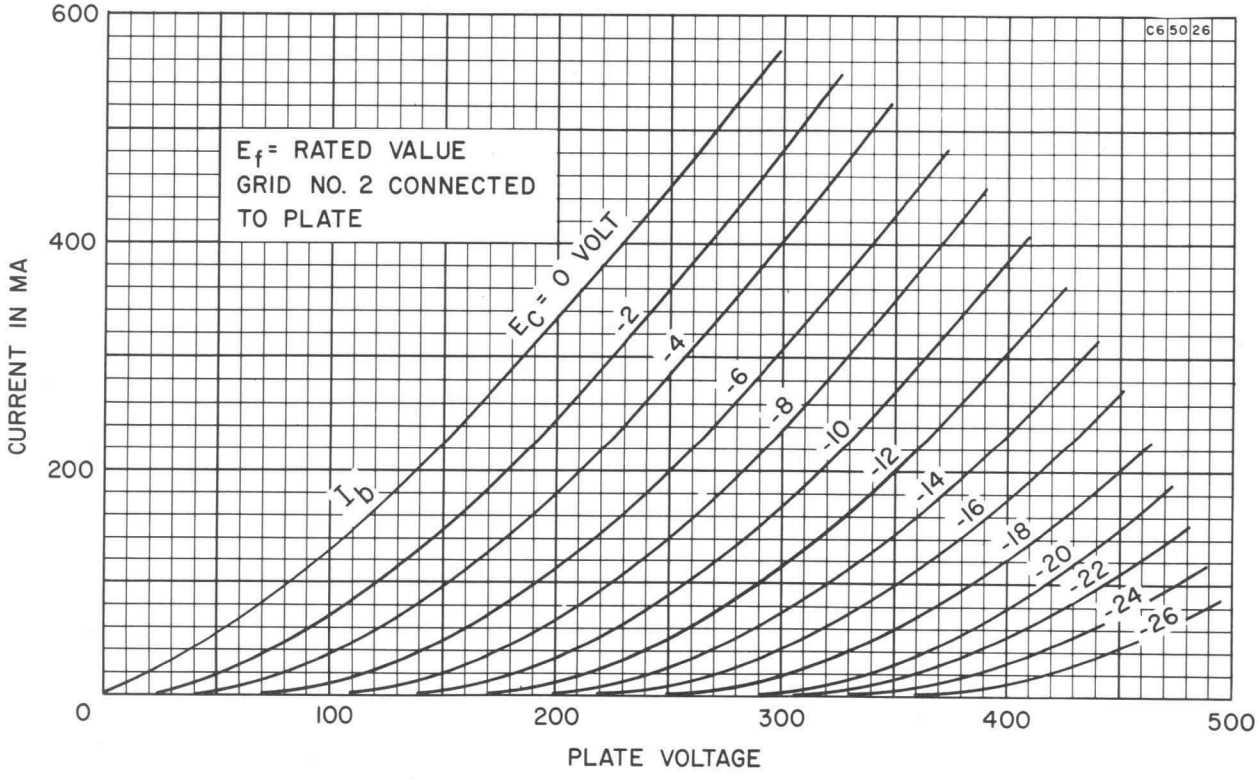

MECHANICAL DATA

Bulb	See Drawing
Base	Modified E9-37
Basing	See Drawing
Mounting Position	Any

ELECTRICAL DATA

RATINGS (Absolute Maximum)

AC Supply Voltage	1000 Volts	Max.
Tube Current (Average)	10 Ma	Max.
Temperature Range	−20 to +100 °C	

AVERAGE OPERATING CHARACTERISTICS

Illumination	Candle Flame Approx. 4 to 5 Inches from Tube	
AC Supply Voltage (RMS at 50/60 Cycles)	500 ± 50 Volts	
Tube Voltage Drop	300 ± 15 Volts	
Tube Current (Average)[1]	6 Ma	
Sensitivity Range	1900 to 2900 Angstroms	
Wave Length of Max. Sensitivity	2400 Angstroms	
Background Noise (Cosmic Radiation at Sea Level)	1 PPM	Max.

NOTE:

1. *Measured by moving coil instrument and bridge rectifier with Germanium diodes.*

APPLICATION DATA

The ultraviolet-sensitive phototube P-568 is a gas filled electron tube. It consists of two symmetrically arranged electrodes, which are sealed into a bulb of special ultraviolet transmitting glass. This photocell operates on alternating voltage. If electromagnetic radiation from the ultraviolet part of the spectrum between approx. 1900 and 2900 angstroms hits an electrode which for the moment is negative, photoelectrons will be released from the metal surface. This effect is obtained by a special treatment of the electrodes. As soon as the instantaneous value of the voltage is high enough, an ionization process will be initiated in the space between the electrodes caused by the electrons which are accelerated towards the positive electrode. This ionization process releases a gas discharge. Thus the tube will become conductive as long as the voltage during the considered half-cycle lies above the quenching voltage for the gas discharge. The discharge is quenched at the end of the half cycle. During the subsequent half cycle the other electrode emits photoelectrons in the same way, provided that the radiation continues. As soon as the ignition voltage is reached another gas discharge takes place. If the intensity of the radiation is high enough, the tube ignites during each half cycle, i.e., a state of saturation is obtained, which corresponds to a constant maximum value of the alternating current flowing through the tube. Its height is dependent upon the outer limiting resistor and upon the frequency of the applied voltage.

The high sensitivity of the tube to ultraviolet radiation may be realized from the fact that the UV portion of the radiation of an ordinary candle flame located a few inches from the tube is sufficient to saturate it. This photocell is blind to visible light and to UV radiation with a wave length above appriximate 2900 angstroms. The tube therefore represents an extremely sensitive flame detector. The high output current makes it possible to operate relays directly.

If the tube is used for quantitative measurements of radiation intensities, the frequency of the operating voltage must be so high that even with the highest intensity to be measured the state of saturation will not be reached.

QUICK REFERENCE DATA

The Sylvania Type P-568 is a gas filled phototube, sensitive only to ultraviolet radiation of wave lengths between 1900 and 2900 angstroms. It consists of two symmetrically arranged electrodes, sealed in an ultraviolet transmitting glass bulb. An output current of 6 Ma is readily obtainable for direct relay operations. Applications include flame detector for furnace control, fire detection, and ultraviolet radiation detection and measurements.

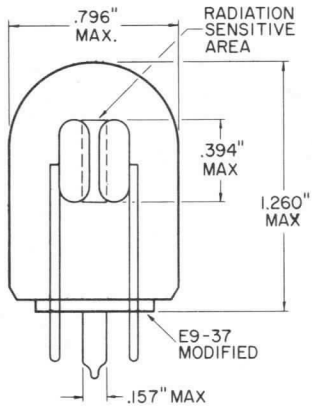

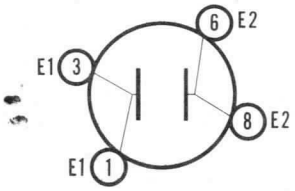

SYLVANIA ELECTRIC PRODUCTS INC.

INTERNATIONAL DIVISION
NEW YORK, N. Y.

A Technical Publication
NOVEMBER, 1964

File Under
PHOTOCONDUCTORS

AC OPERATED CONTROL CIRCUIT

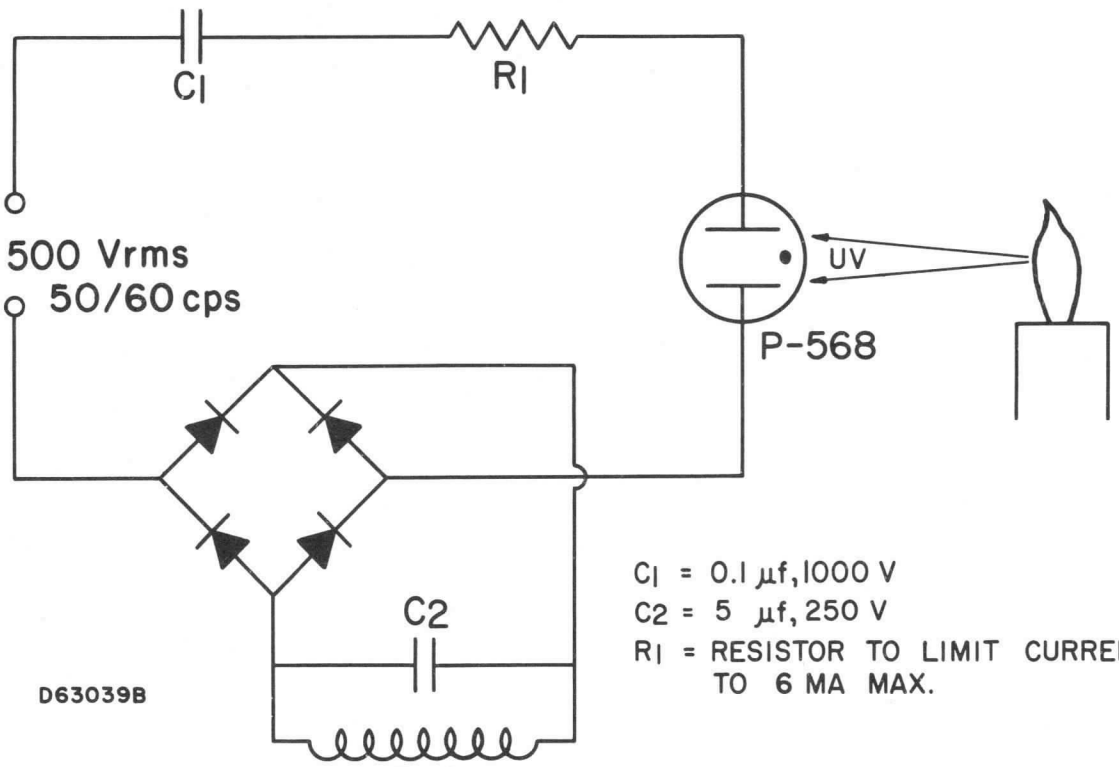

C1 = 0.1 µf, 1000 V
C2 = 5 µf, 250 V
R1 = RESISTOR TO LIMIT CURRENT TO 6 MA MAX.

OPERATING AT 6 MA OR LESS

GENERAL DATA

Spectral Response	See Curve
Wavelength of Max. Response	6100 ± 400 Angstroms
Sensitive Material	Cadmium-Sulfide
Shape of Sensitive Area	Circular
Construction	Hermetically Sealed in Glass
8100	Flexible Leads
8100-1	Push-Pin Base
8100-7	Bayonet Base
Outline	See Drawings
Operating Position	Any

ELECTRICAL DATA

RATINGS (Absolute Maximum Values)

Breakdown Voltage[2]	400 VAC
Dissipation	
T-amb = 25°C	300 mW
T-amb = 70°C	25 mW
Ambient Temperature Range	−40 to +70 °C
Illumination	Note 3

CHARACTERISTICS

Cell Resistance[4]	
Illumination 2 FC	
Color Temperature 2870°K	5000 Ohms
Dark Resistance[5]	500,000 Ohms Min.

NOTES:

1. *Minute increases in relative humidity will produce change in color.*
2. *Measured with cell in complete darkness at a pulse rate of 100 pps, 100 μ sec. duration. Voltage in excess of the rated value may damage the cell. Maximum DC voltage is limited by maximum dissipation and minimum dark resistance rating.*
3. *Care should be exercised to prevent localized overheating of the sensitive surface when the cell is used with a lens system.*
4. *Measured after 60 minutes exposure to approximately 50 FC illumination (ambient room light).*
5. *Measured in complete darkness, 10 seconds after removal of 2 FC illumination.*

OUTLINE 8100-1

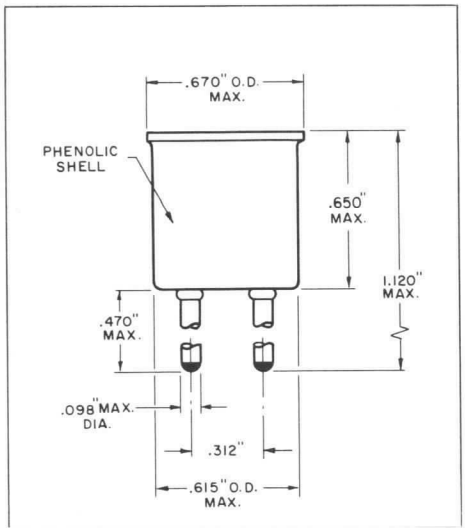

OUTLINE 8100-7

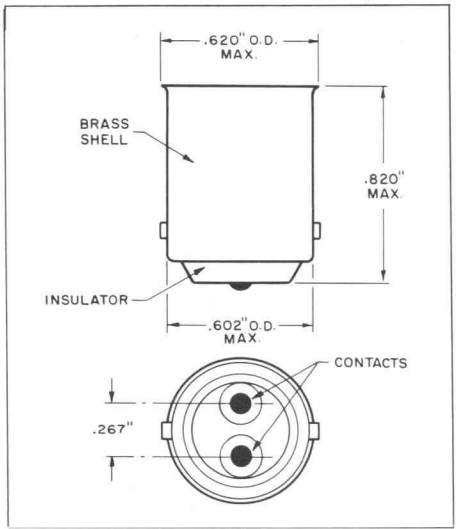

QUICK REFERENCE DATA

The Sylvania Types, 8100, 8100-1 and 8100-7 are cadmium sulfide photoconductive cells featuring high sensitivity and hermetically sealed in-glass construction. The cell is backfilled with gas for a high dissipation safety factor and high voltage capability and includes a blue-dot compound which turns pink[1] if the cell envelope becomes damaged. They are designed for use in a variety of industrial applications as well as automatic contrast and brightness control in television receivers. They are particularly suited to direct operation of relays.

OUTLINE 8100

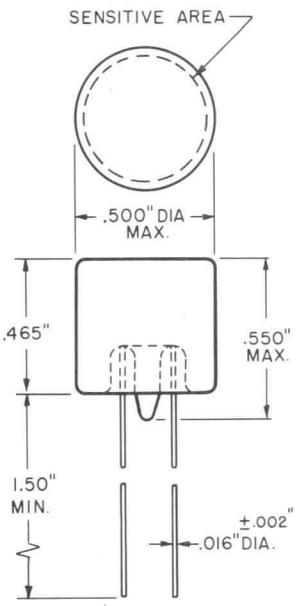

SYLVANIA ELECTRIC PRODUCTS INC.

Electronic Components Group
ELECTRONIC TUBE DIVISION
EMPORIUM, PA.

A Technical Publication
MAY, 1965
PAGE 1 OF 4
File Under
PHOTOCONDUCTORS

SPECTRAL RESPONSE

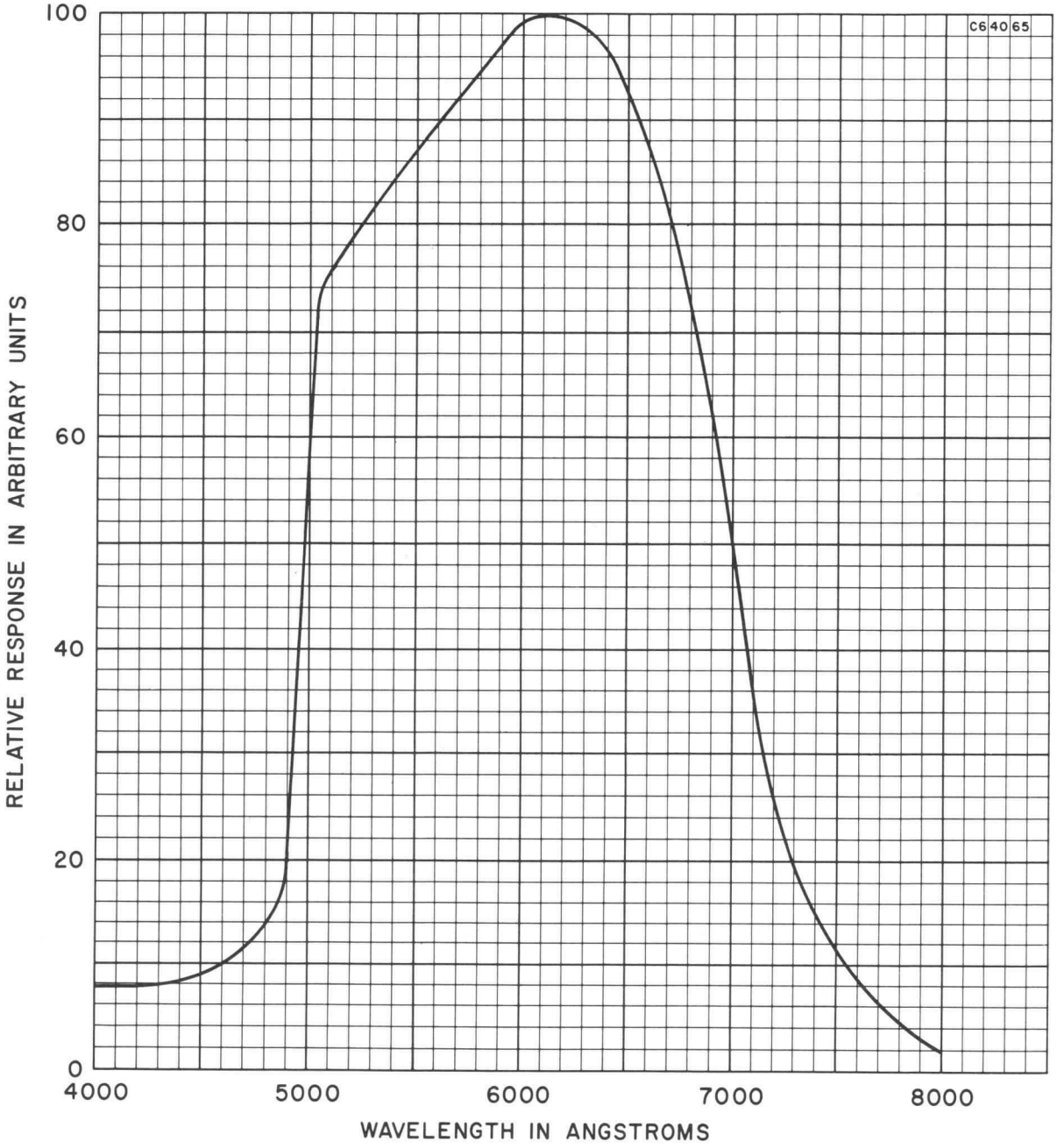

SPECTRAL CHARACTERISTIC OF HUMAN EYE, TUNGSTEN AND FLUORESCENT LAMPS

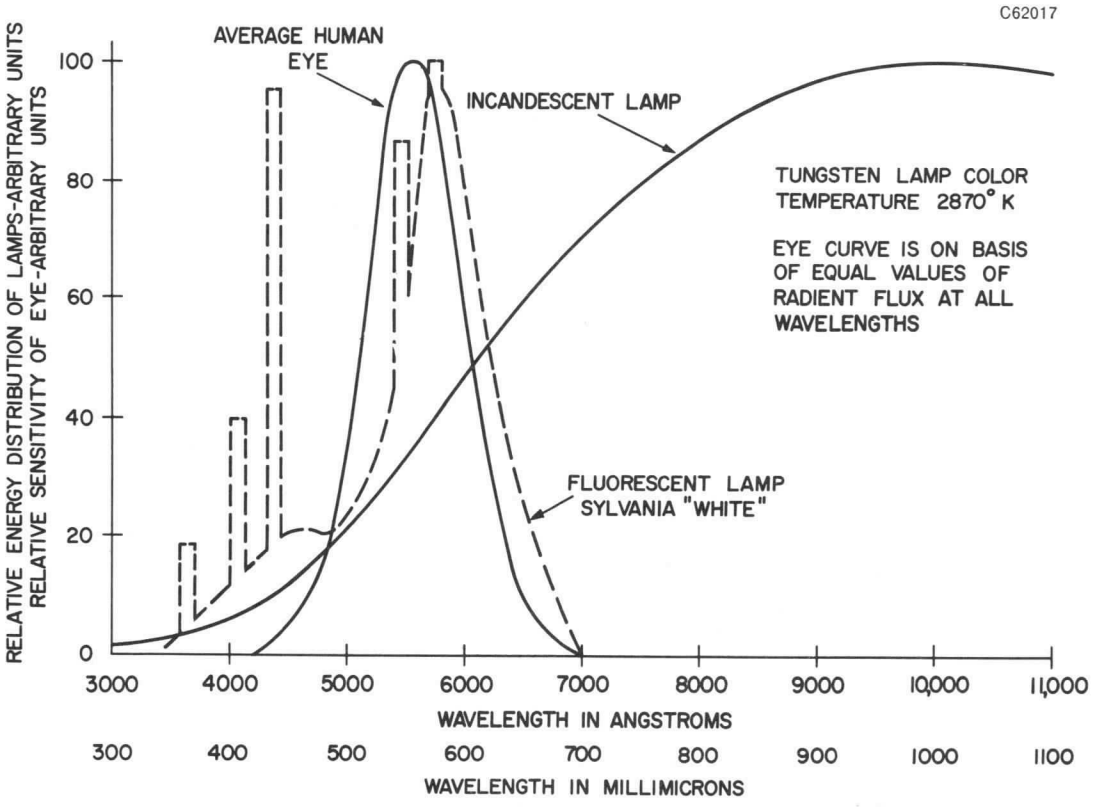

AVERAGE CHARACTERISTICS

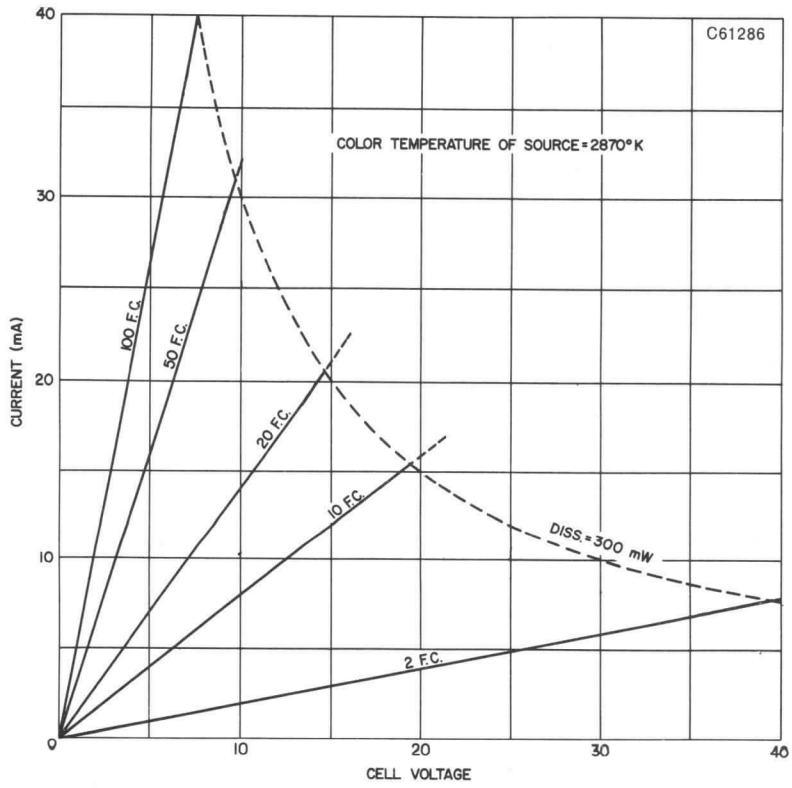

PERMISSIBLE DISSIPATION AS A FUNCTION OF AMBIENT TEMPERATURE

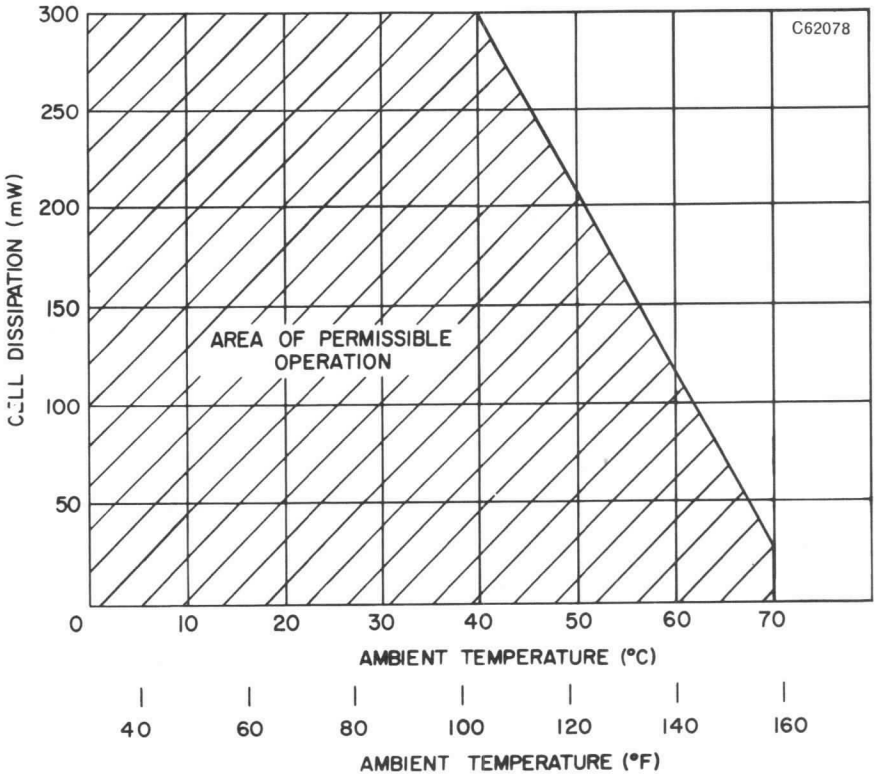

AVERAGE CHARACTERISTICS

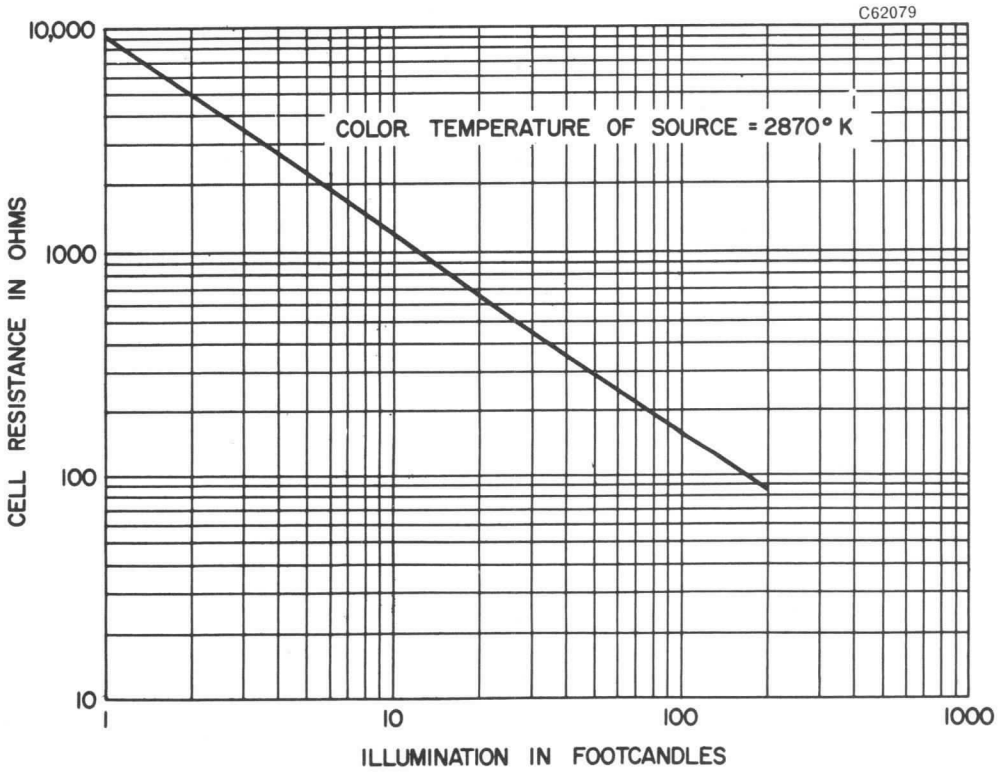

GENERAL DATA

Spectral Response	See Curve
Wavelength of Max. Response	6100 ± 400 Angstroms
Sensitive Material	Cadmium-Sulfide
Shape of Sensitive Area	Circular
Construction	Hermetically Sealed in Glass
8142	Flexible Leads
8142-1	Push-Pin Base
8142-7	Bayonet Base
Outline	See Drawings
Operating Position	Any

ELECTRICAL DATA

RATINGS (Absolute Maximum Values)

Breakdown Voltage[2]	400 VAC
Dissipation	
T-amb = 25°C	300 mW
T-amb = 70°C	25 mW
Ambient Temperature Range	−40 to +70 °C
Illumination	Note 3

CHARACTERISTICS

Cell Resistance[4]	
Illumination 2 FC	
Color Temperature 2870°K	1500 Ohms
Dark Resistance[5]	200,000 Ohms Min.

NOTES:

1. *Minute increases in relative humidity will produce change in color.*
2. *Measured with cell in complete darkness at a pulse rate of 100 pps, 100 μ sec. duration. Voltage in excess of the rated value may damage the cell. Maximum DC voltage is limited by maximum dissipation and minimum dark resistance rating.*
3. *Care should be exercised to prevent localized overheating of the sensitive surface when the cell is used with a lens system.*
4. *Measured after 60 minutes exposure to approximately 50 FC illumination (ambient room light).*
5. *Measured in complete darkness, 10 seconds after removal of 2 FC illumination.*

OUTLINE 8142-1

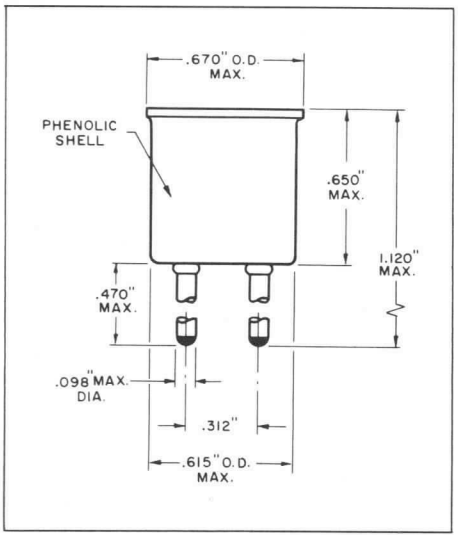

OUTLINE 8142-7

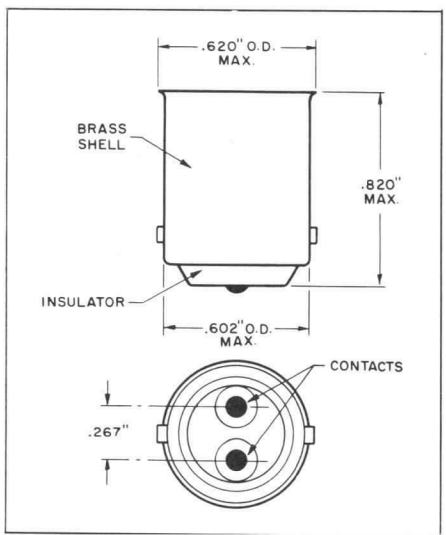

QUICK REFERENCE DATA

The Sylvania Types 8142, 8142-1 and 8142-7 are cadmium sulfide photoconductive cells featuring high sensitivity and hermetically sealed-in-glass construction. The cell is backfilled with gas for a high dissipation safety factor and high voltage capability and includes a blue-dot compound which turns pink[1] if the cell envelope becomes damaged. They feature relatively low resistance (1500 Ohms). They are designed for use in a wide variety of industrial applications, and are particularly suited to direct operation of relays.

OUTLINE 8142

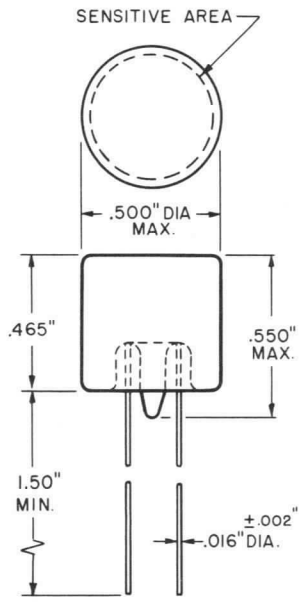

SYLVANIA ELECTRIC PRODUCTS INC.

Electronic Components Group
ELECTRONIC TUBE DIVISION
EMPORIUM, PA.

A Technical Publication
MAY, 1965

File Under
PHOTOCONDUCTORS

SPECTRAL RESPONSE

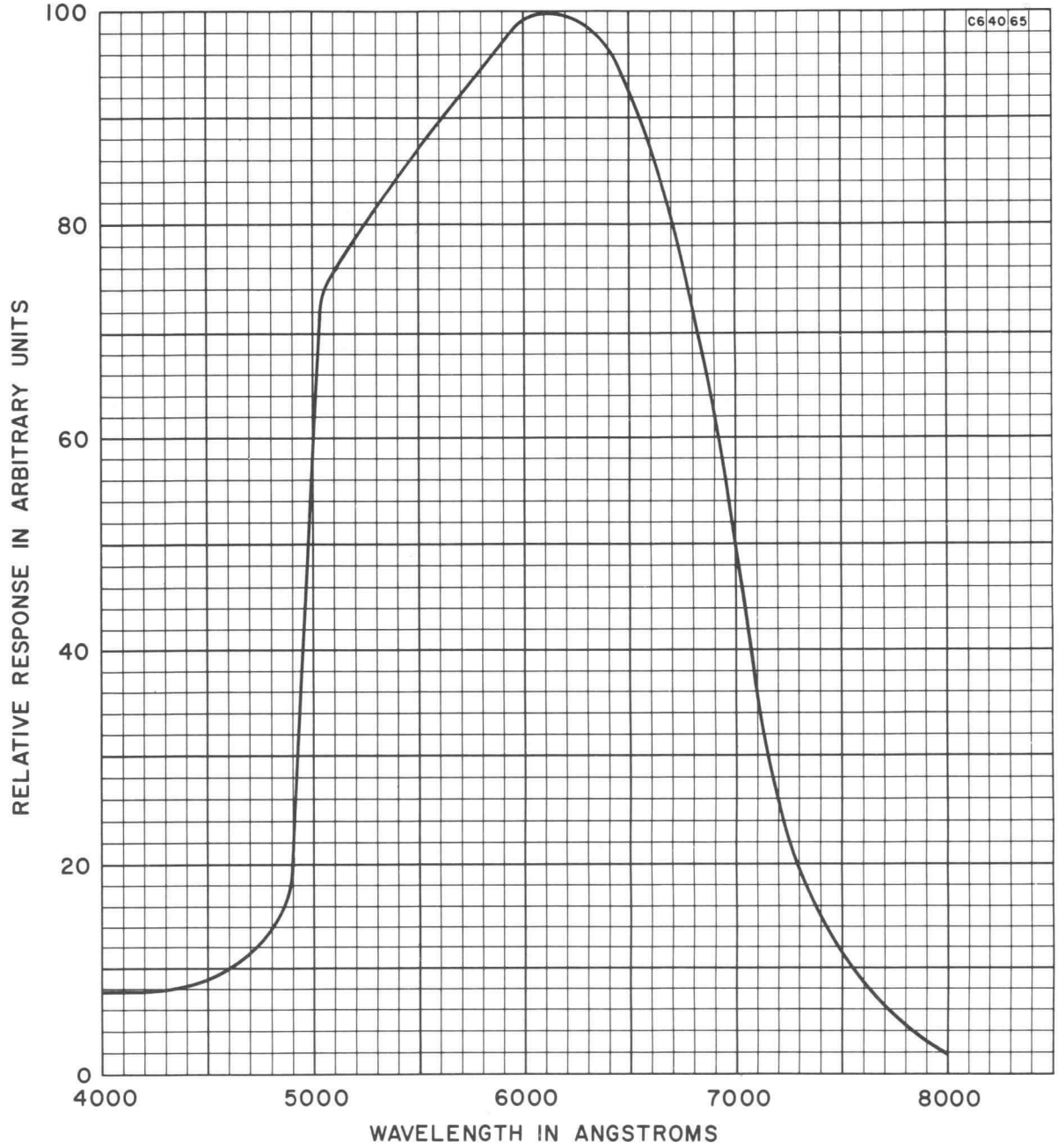

SPECTRAL CHARACTERISTIC OF HUMAN EYE, TUNGSTEN AND FLUORESCENT LAMPS

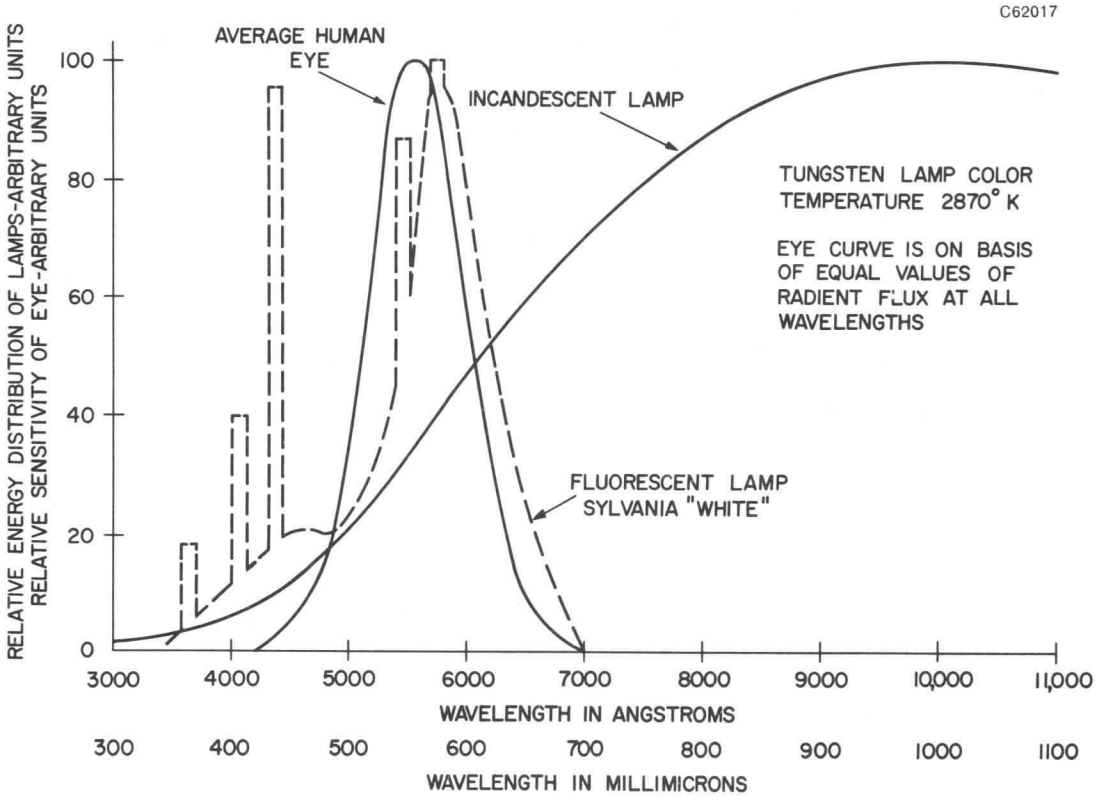

AVERAGE CHARACTERISTICS

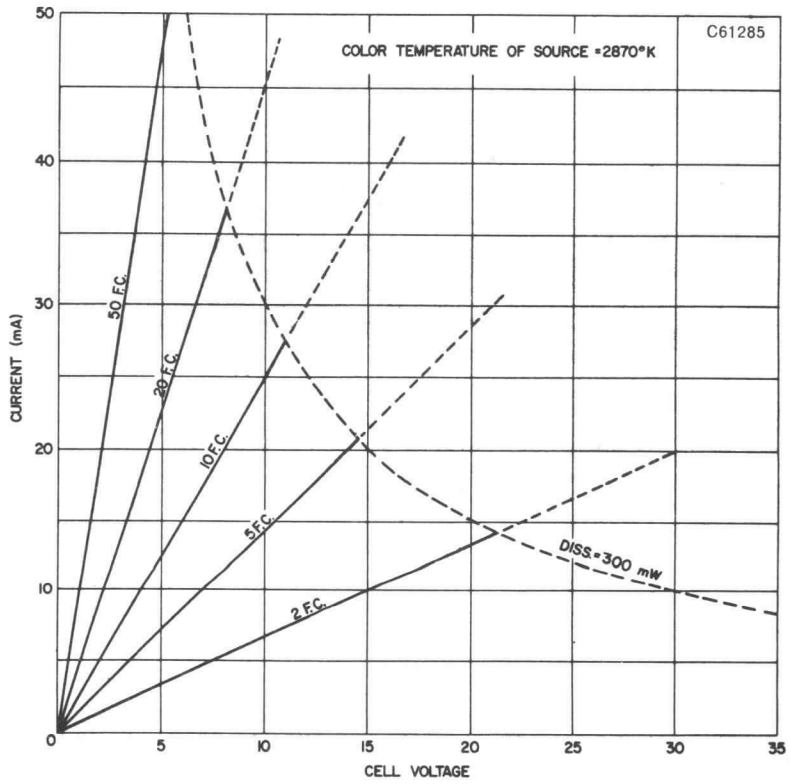

PERMISSIBLE DISSIPATION AS A FUNCTION OF AMBIENT TEMPERATURE

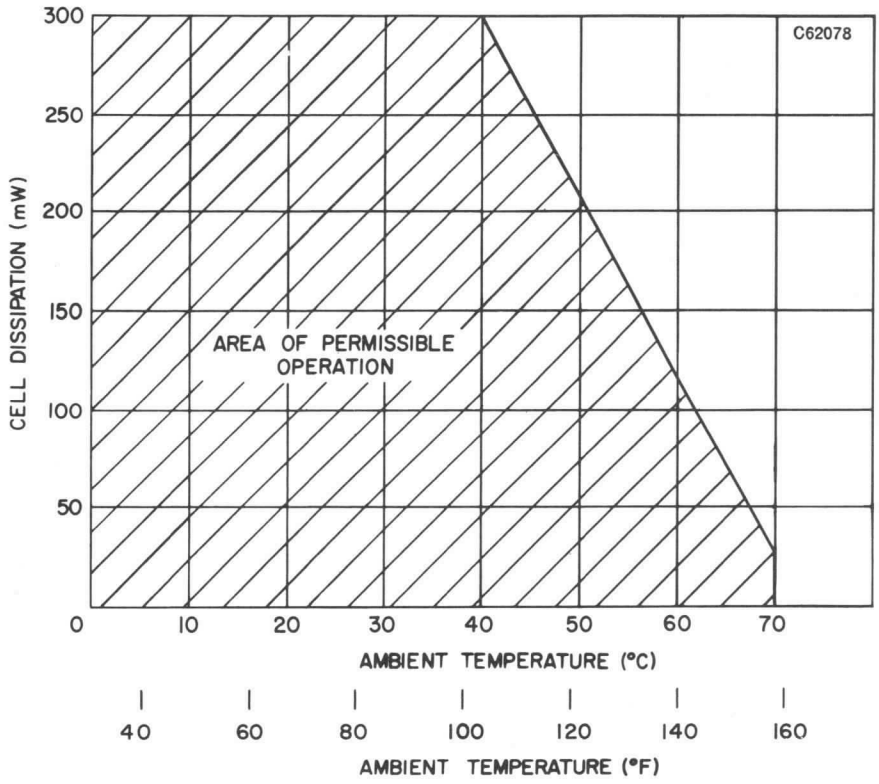

AVERAGE CHARACTERISTICS

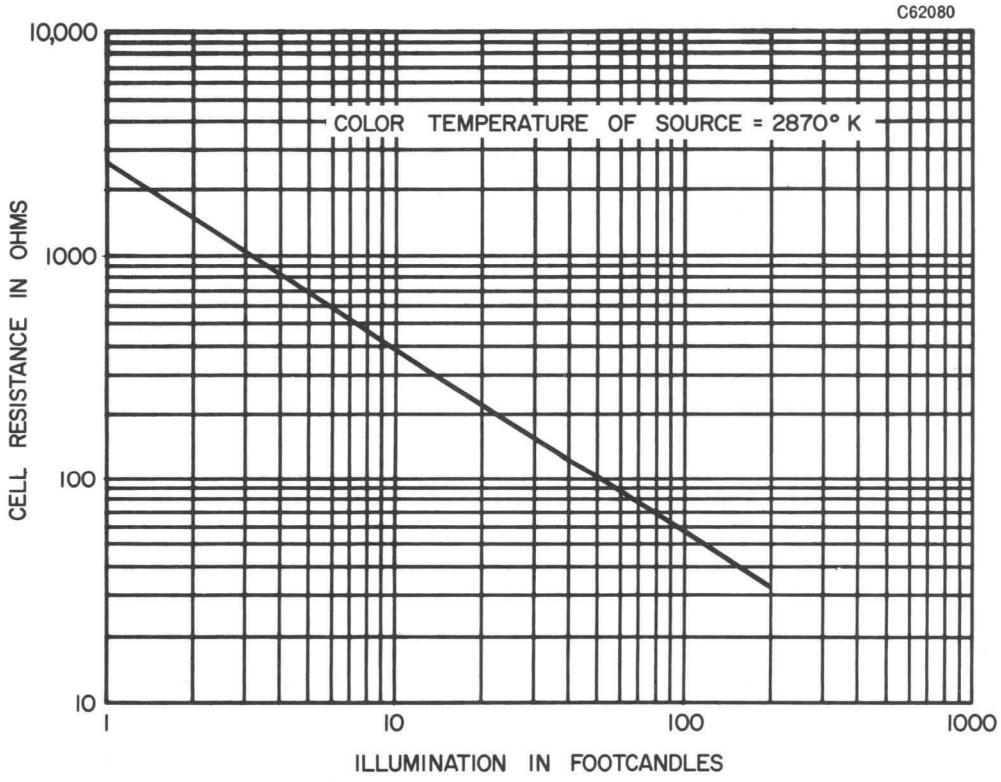

SYLVANIA

engineering data service

SYLVANIA
8143
8143-1
8143-7

GENERAL DATA

Spectral Response	See Curve
Wavelength of Max. Response	6100 ± 400 Angstroms
Sensitive Material	Cadmium-Sulfide
Shape of Sensitive Area	Circular
Construction	Hermetically Sealed in Glass
8143	Flexible Leads
8143-1	Push-Pin Base
8143-7	Bayonet Base
Outline	See Drawings
Operating Position	Any

ELECTRICAL DATA

RATINGS (Absolute Maximum Values)

Breakdown Voltage[2]	400 VAC
Dissipation	
T-amb = 25°C	300 mW
T-amb = 70°C	25 mW
Ambient Temperature Range	−40 to +70 °C
Illumination	Note 3

CHARACTERISTICS

Cell Resistance[4]	
Illumination 2 FC	
Color Temperature 2870°K	9000 Ohms
Dark Resistance[5]	900,000 Ohms Min.

NOTES:

1. *Minute increases in relative humidity will produce change in color.*
2. *Measured with cell in complete darkness at a pulse rate of 100 pps, 100 μ sec. duration. Voltage in excess of the rated value may damage the cell. Maximum DC voltage is limited by maximum dissipation and minimum dark resistance rating.*
3. *Care should be exercised to prevent localized overheating of the sensitive surface when the cell is used with a lens system.*
4. *Measured after 60 minutes exposure to approximately 50 FC illumination (ambient room light).*
5. *Measured in complete darkness, 10 seconds after removal of 2 FC illumination.*

OUTLINE 8143-1

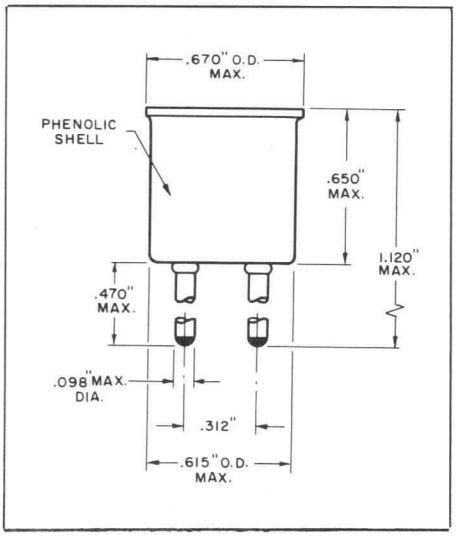

OUTLINE 8143-7

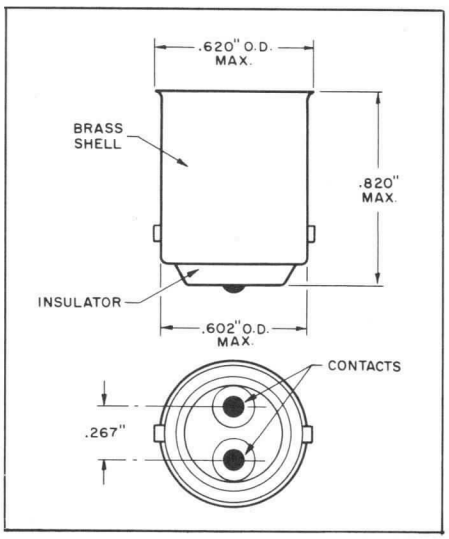

QUICK REFERENCE DATA

The Sylvania Types 8143, 8143-1 and 8143-7 are cadmium sulfide photoconductive cells featuring high sensitivity and hermetically sealed-in-glass construction. The cell is backfilled with gas for a high dissipation safety factor and high voltage capability and includes a blue-dot compound which turns pink[1] if the cell envelope becomes damaged. They feature relatively high resistance (9000 Ohms). They are designed for use in a wide variety of industrial applications, and are particularly suited to direct operation of relays.

OUTLINE 8143

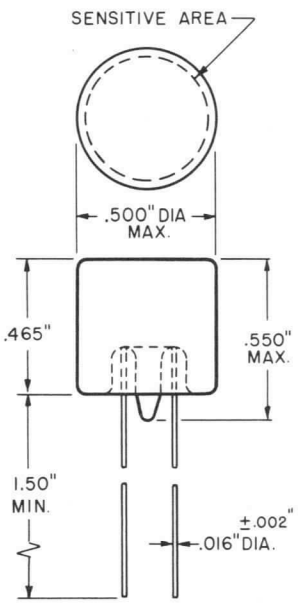

SYLVANIA ELECTRIC PRODUCTS INC.

Electronic Components Group
ELECTRONIC TUBE DIVISION
EMPORIUM, PA.

A Technical Publication
MAY, 1965

File Under
PHOTOCONDUCTORS

SPECTRAL RESPONSE

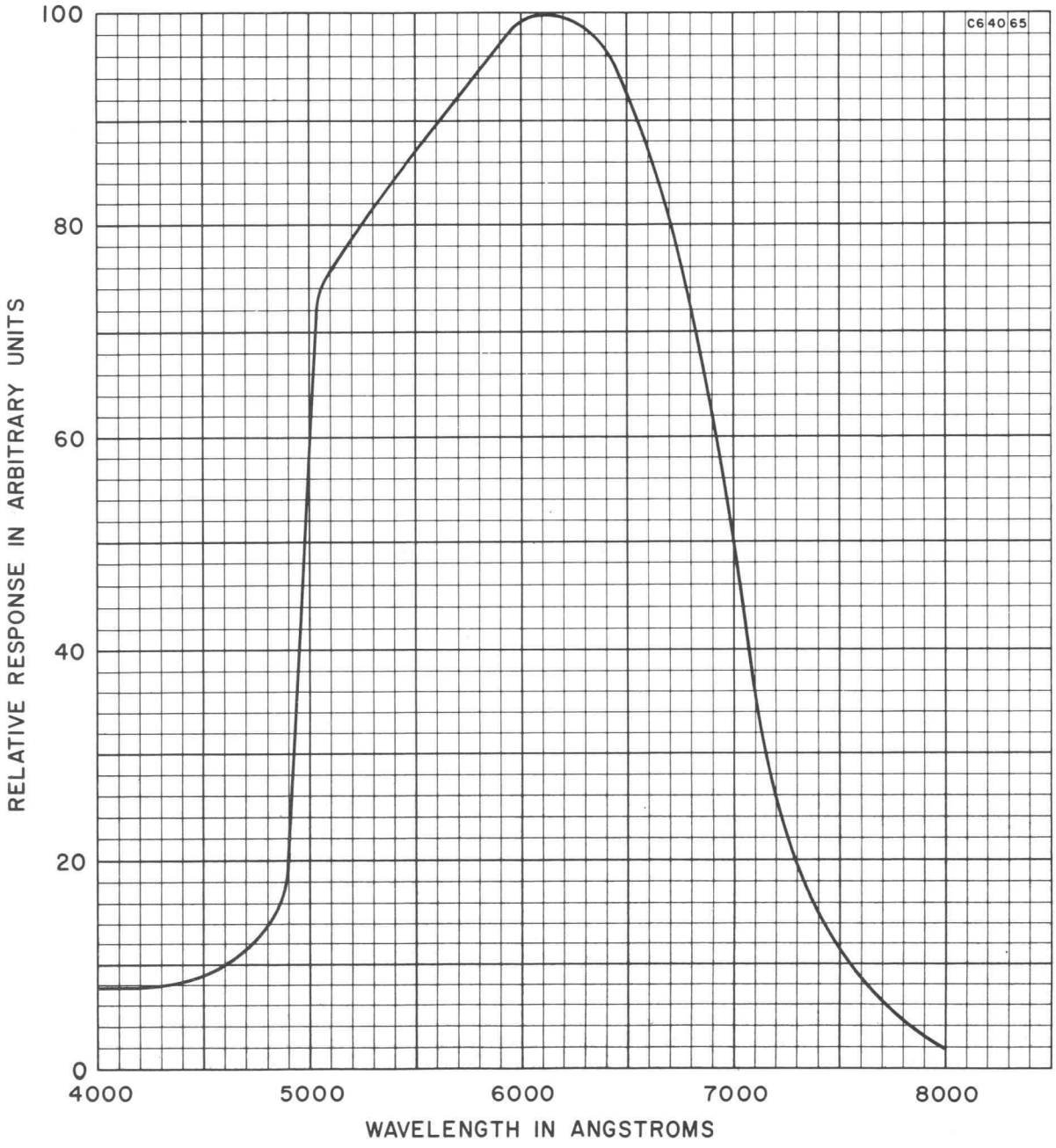

SPECTRAL CHARACTERISTIC OF HUMAN EYE, TUNGSTEN AND FLUORESCENT LAMPS

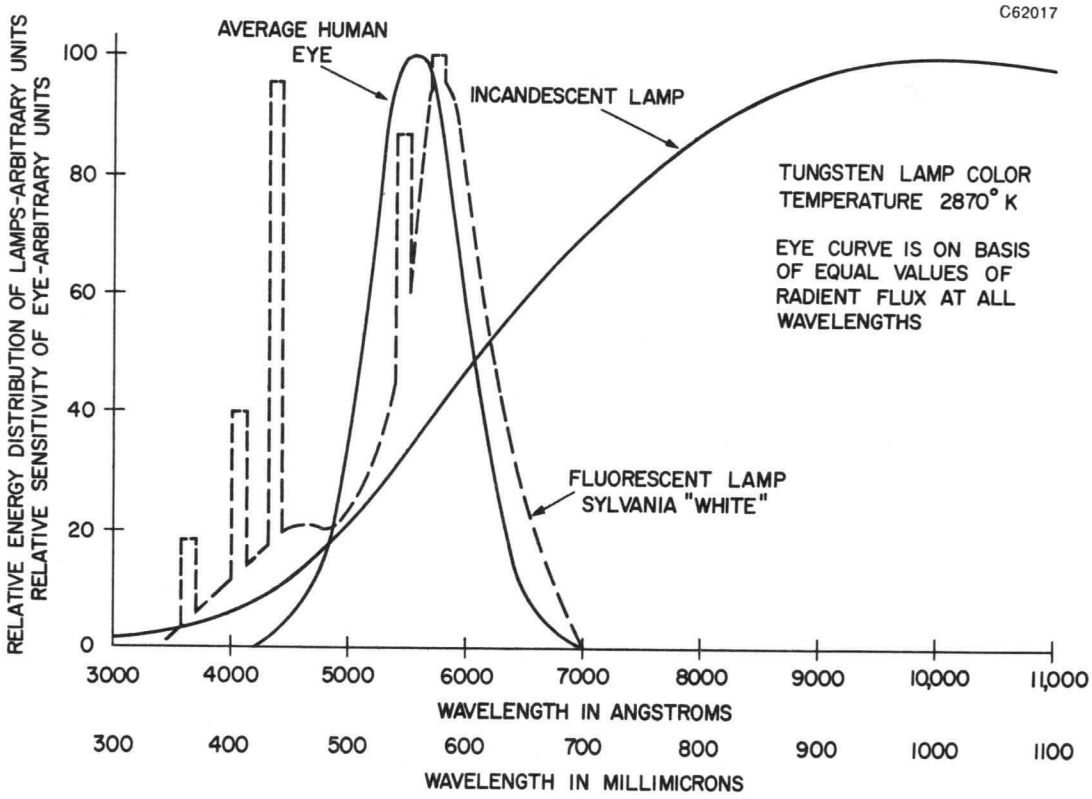

AVERAGE CHARACTERISTICS

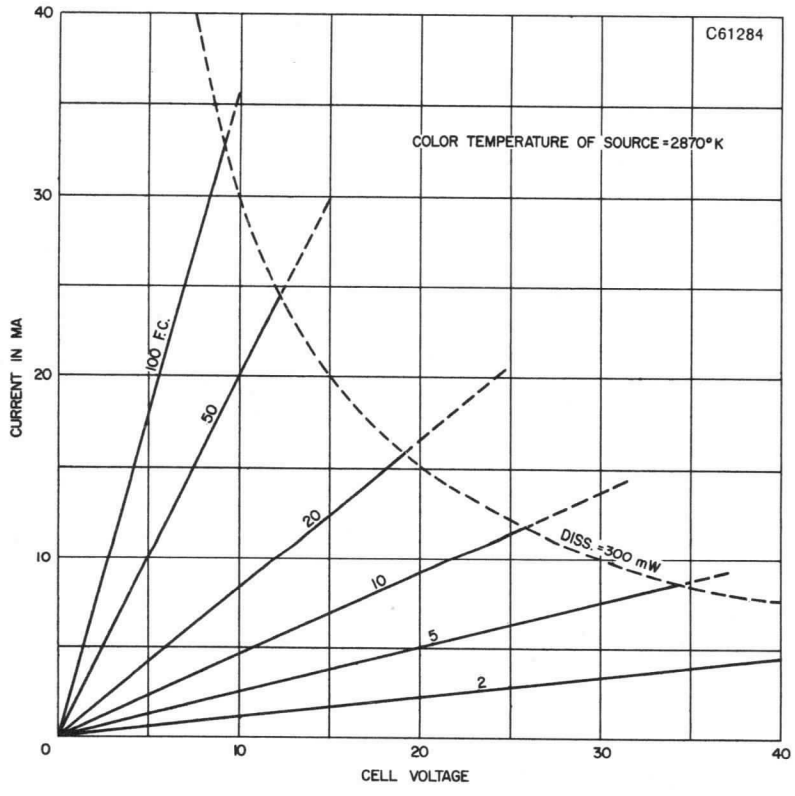

PERMISSIBLE DISSIPATION AS A FUNCTION OF AMBIENT TEMPERATURE

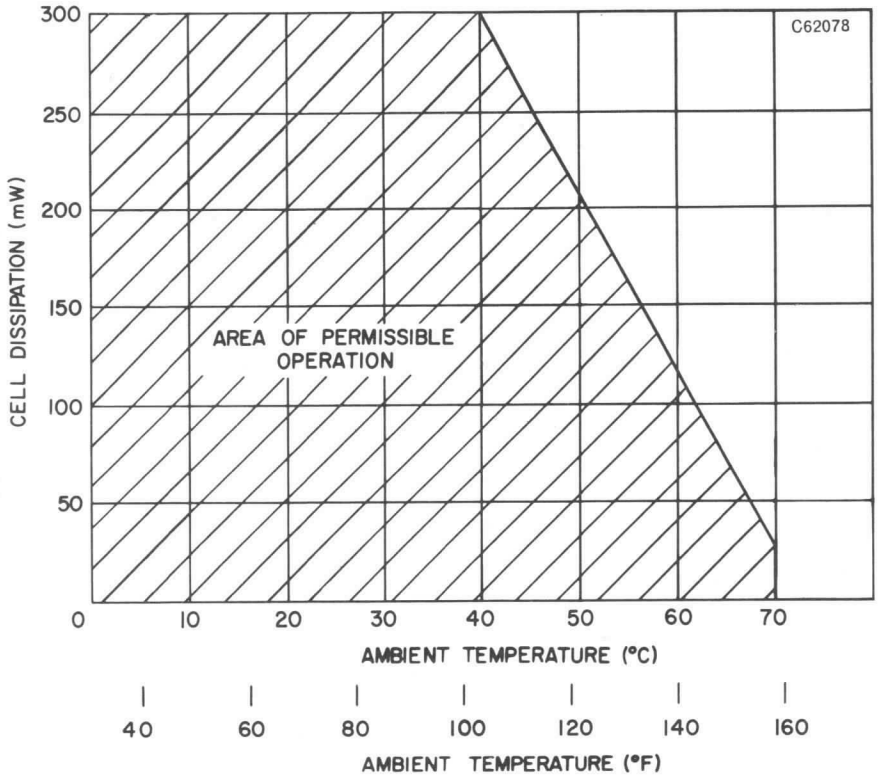

AVERAGE CHARACTERISTICS

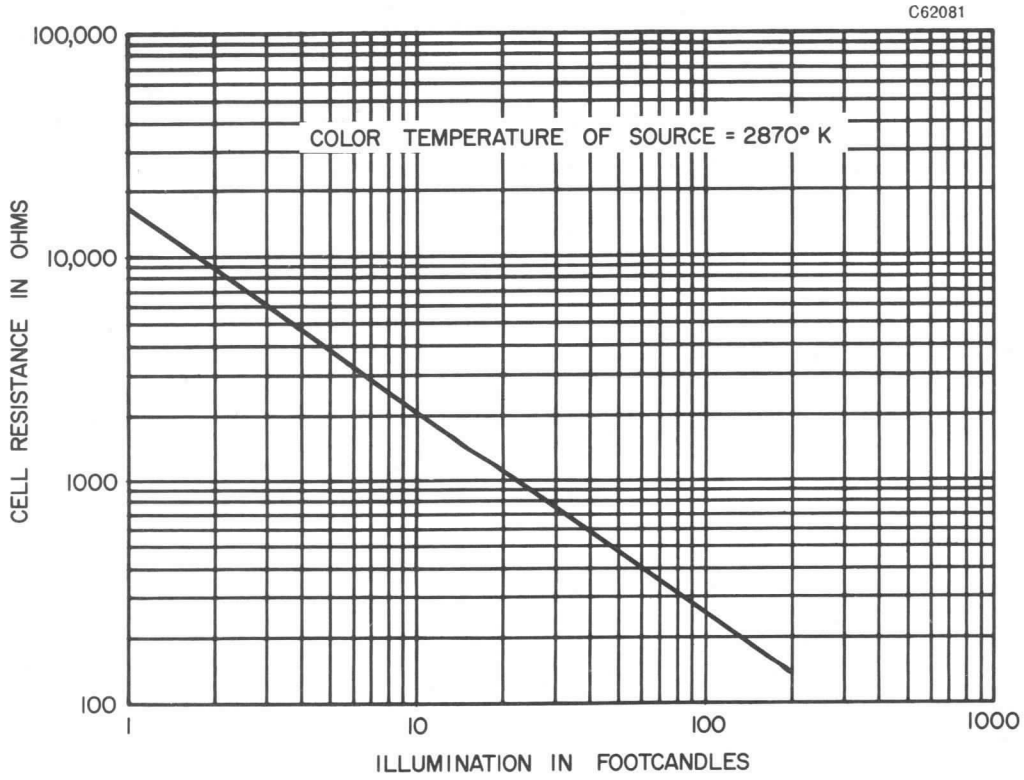

GENERAL DATA

Spectral Response	See Curve
Wavelength of Maximum Response	6100 ± 400 Angstroms
Sensitive Material	Cadmium-Sulfide
Sensitive Area	Viewed from End
Construction	Hermetically Sealed in Glass with Flexible Leads
Outline	See Drawing
Operating Position	Any

ELECTRICAL DATA

RATINGS (Absolute Maximum Values)

Breakdown Voltage[2]	300 Volts
Dissipation	
T-amb = 25°C	50 mW
T-amb = 70°C	5 mW
Ambient Temperature Range	−40 to +70 °C
Illumination	Note 3

CHARACTERISTICS

Cell Resistance[4]	
Illumination 2 FC	
Color Temperature 2870°K	40,000 Ohms
Dark Resistance[5]	10.0 Megohms Min.

NOTES:

1. *Minute increases in relative humidity will produce change in color.*
2. *Measured with cell in complete darkness at a pulse rate of 100 pps, 100 μ sec. duration. Voltage in excess of the rated value may damage the cell. Maximum DC or AC peak voltage is limited by maximum dissipation and minimum dark resistance rating.*
3. *Care should be exercised to prevent localized over-heating of the sensitive surface when the cell is used with a lens system.*
4. *Measured after 60 minutes minimum exposure to approximately 50 FC illumination (ambient room light).*
5. *Measured in complete darkness, 10 seconds after removal of 2 FC illumination.*

QUICK REFERENCE DATA

The Sylvania Type 8318 is a miniature cadmium-sulfide photoconductive cell featuring high sensitivity and hermetically sealed - in - glass construction. The cell is gaseous back-filled for a high dissipation safety factor and includes a blue-dot compound which turns pink[1] if the cell envelope becomes damaged. The 8318 is designed for use in a wide variety of industrial applications.

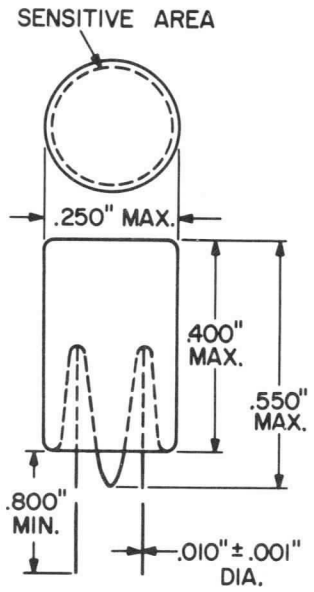

SYLVANIA ELECTRIC PRODUCTS INC.

Electronic Components Group
ELECTRONIC TUBE DIVISION
EMPORIUM, PA.

A Technical Publication
NOVEMBER, 1964

File Under
PHOTOCONDUCTORS

SPECTRAL RESPONSE

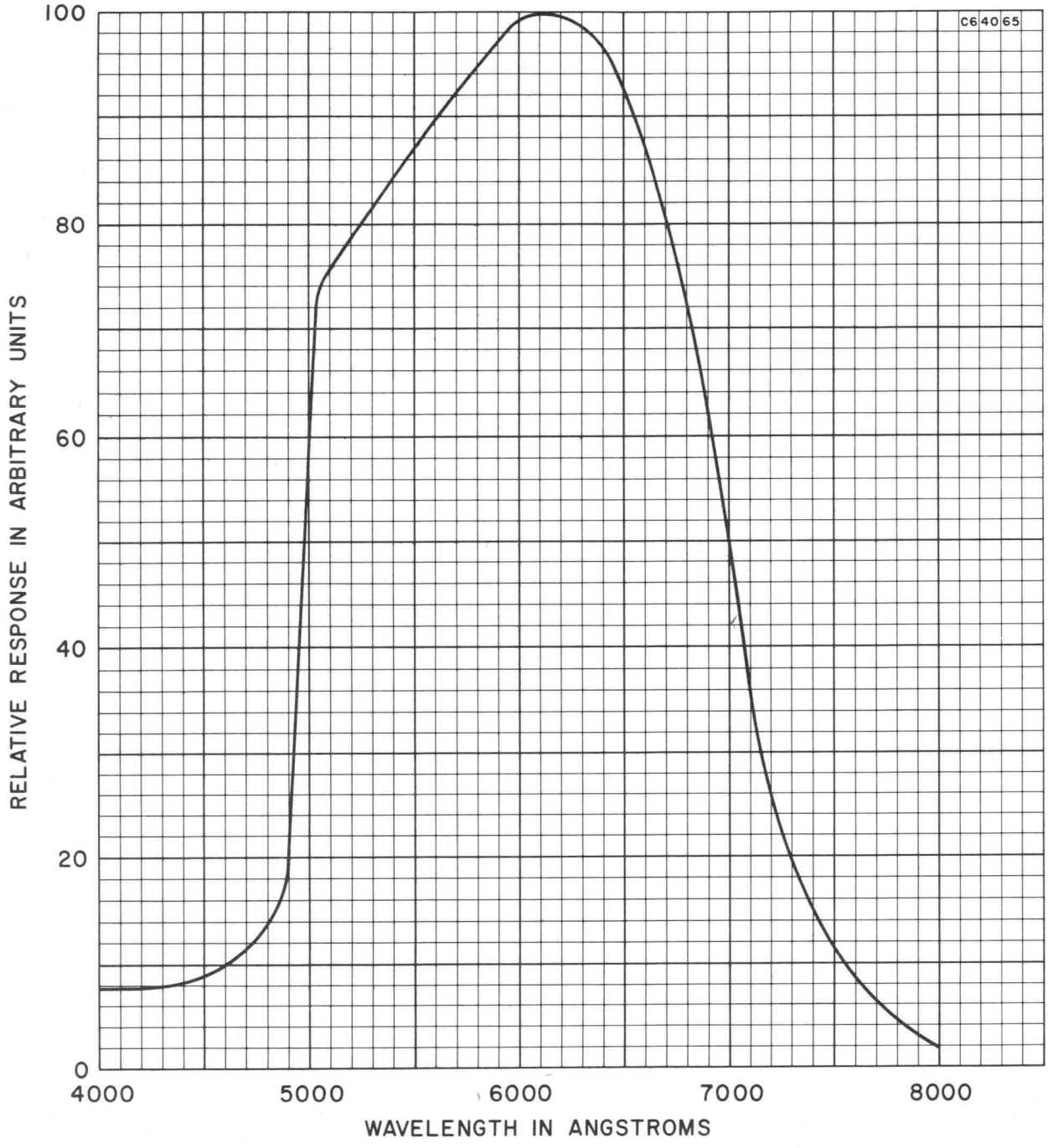

SPECTRAL CHARACTERISTIC OF HUMAN EYE, TUNGSTEN AND FLUORESCENT LAMPS

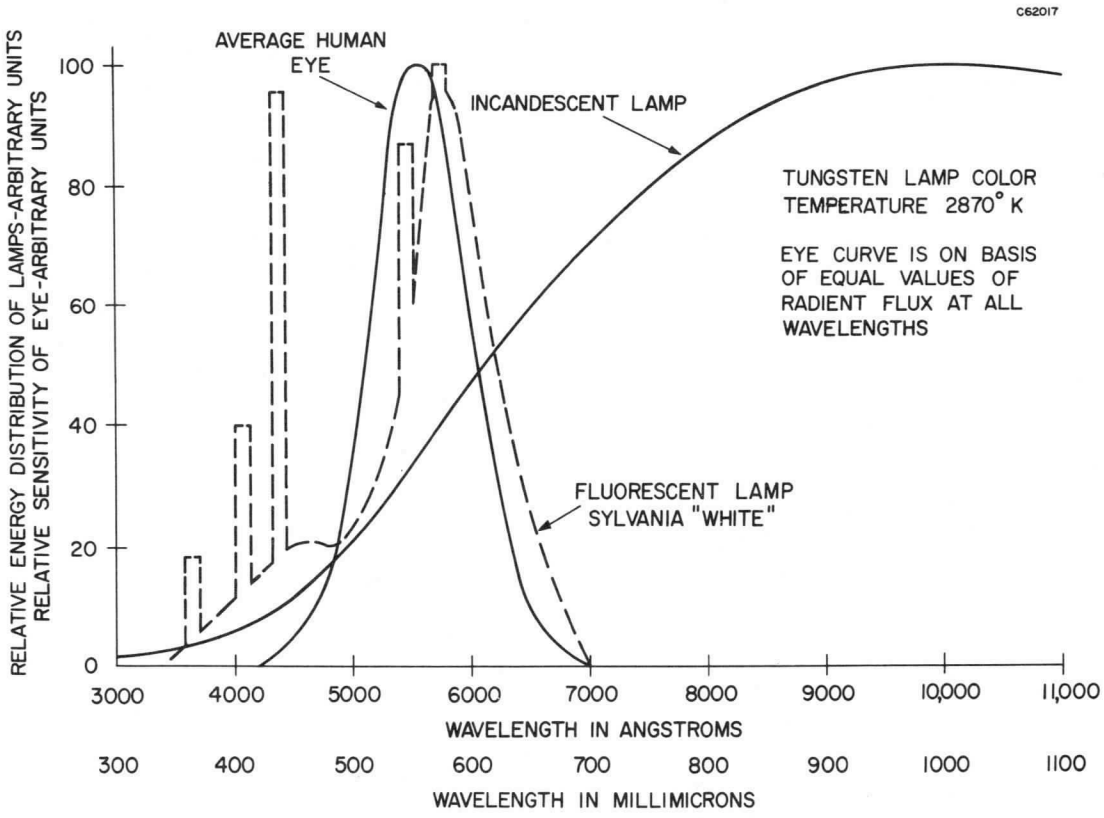

PERMISSIBLE DISSIPATION AS A FUNCTION OF AMBIENT TEMPERATURE

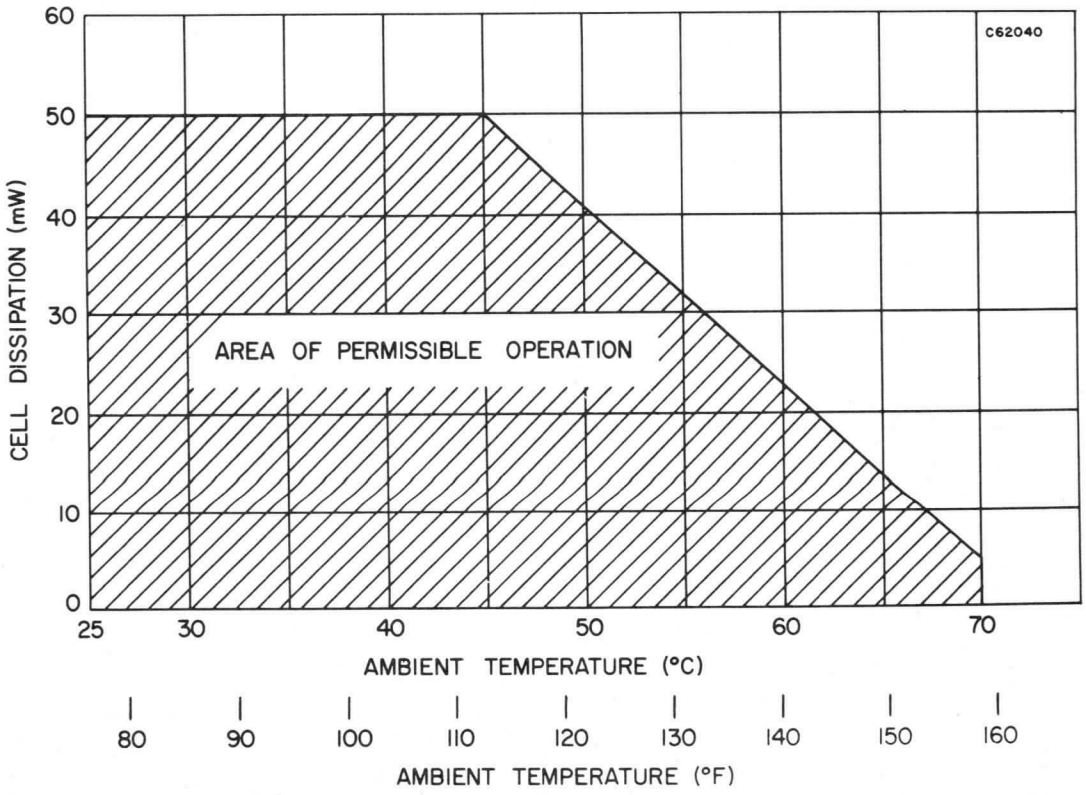

CELL RESISTANCE VS ILLUMINATION

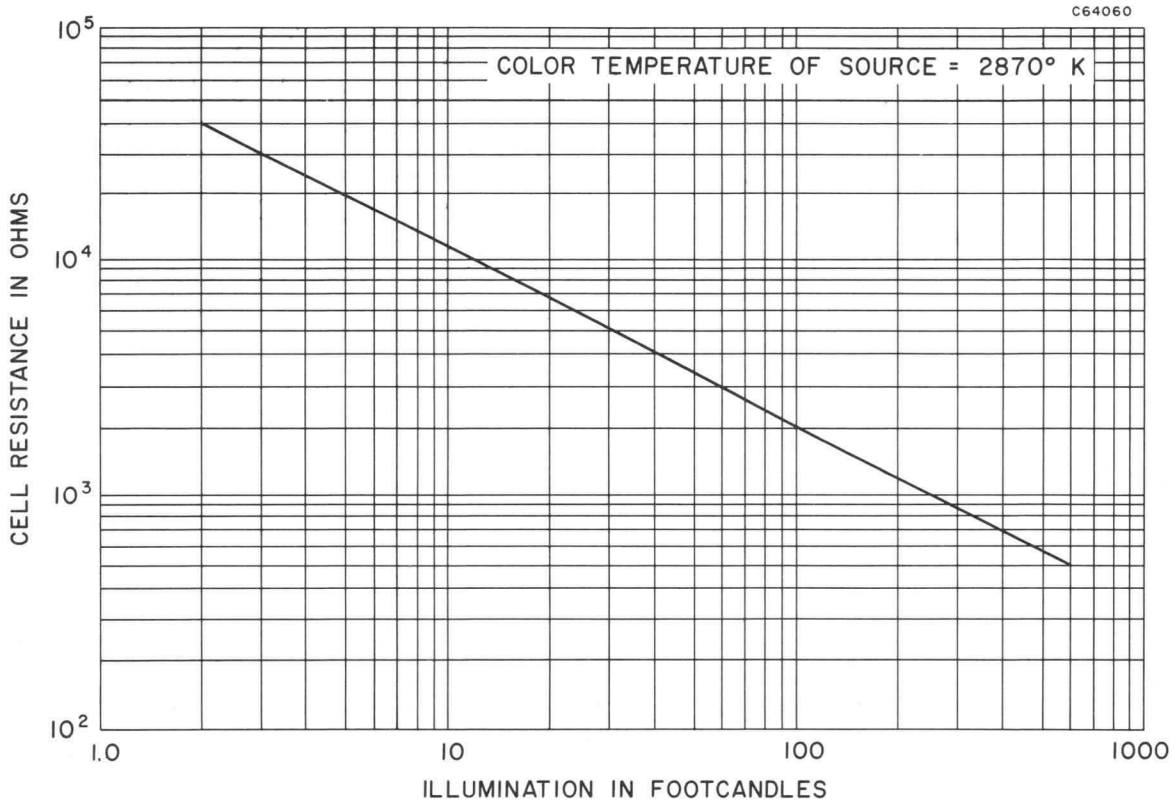

CELL CURRENT AND DISSIPATION VS VOLTAGE

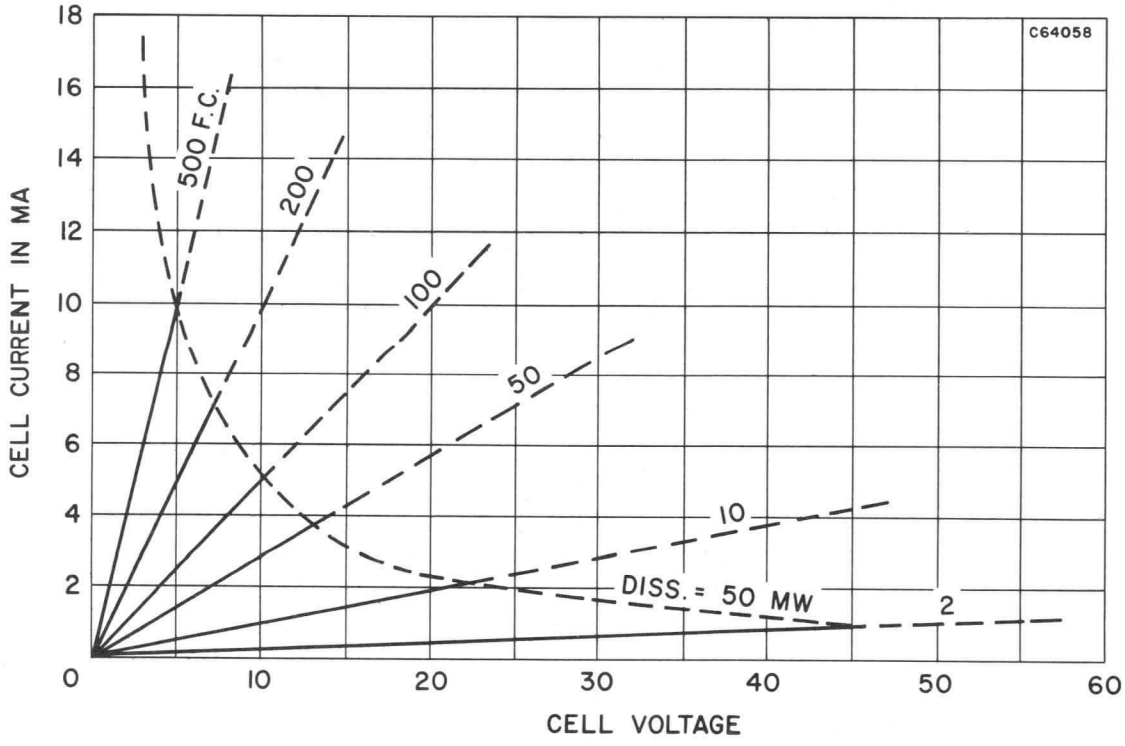

GENERAL DATA

Spectral Response	See Curve
Wavelength of Max. Response	6100 ± 400 Angstroms
Sensitive Material	Cadmium-Sulfide
Shape of Sensitive Area	Circular
Construction	Hermetically Sealed in Glass
8345	Flexible Leads
8345-1	Push-Pin Base
8345-7	Bayonet Base
Outline	See Drawings
Operating Position	Any

ELECTRICAL DATA

RATINGS (Absolute Maximum Values)

Breakdown Voltage[2]	400 VAC
Dissipation	
T-amb = 25°C	300 mW
T-amb = 70°C	25 mW
Ambient Temperature Range	−40 to +70 °C
Illumination	Note 3

CHARACTERISTICS

Cell Resistance[4]	
Illumination 2 FC	
Color Temperature 2870°K	750 Ohms
Dark Resistance[5]	75,000 Ohms Min.

NOTES:

1. *Minute increases in relative humidity will produce change in color.*
2. *Measured with cell in complete darkness at a pulse rate of 100 pps, 100 μ sec. duration. Voltage in excess of the rated value may damage the cell. Maximum DC voltage is limited by maximum dissipation and minimum dark resistance rating.*
3. *Care should be exercised to prevent localized overheating of the sensitive surface when the cell is used with a lens system.*
4. *Measured after 60 minutes exposure to approximately 50 FC illumination (ambient room light).*
5. *Measured in complete darkness, 10 seconds after removal of 2 FC illumination.*

OUTLINE 8345-1

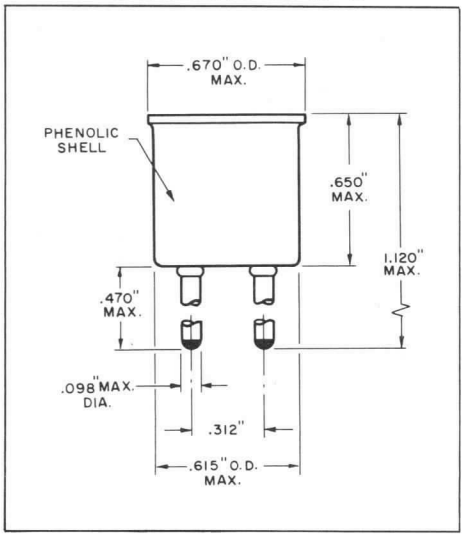

OUTLINE 8345-7

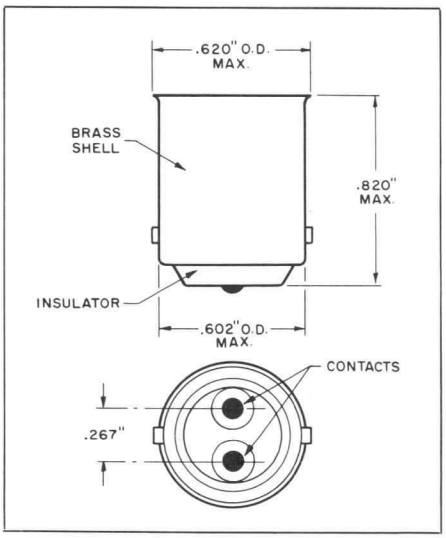

QUICK REFERENCE DATA

The Sylvania Types 8345, 8345-1 and 8345-7 are cadmium sulfide photoconductive cells featuring high sensitivity and hermetically sealed-in-glass construction. The cell is backfilled with gas for a high dissipation safety factor and high voltage capability and includes a blue-dot compound which turns pink[1] if the cell envelope becomes damaged. They have a resistance of 750 ohms at 2 FC. They are designed for use in a wide variety of industrial applications, and are particularly suited to direct operation of relays.

OUTLINE 8345

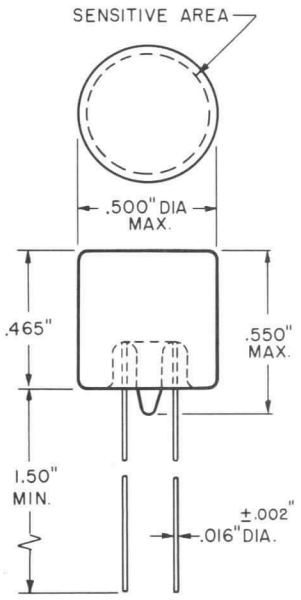

SYLVANIA ELECTRIC PRODUCTS INC.

Electronic Components Group
ELECTRONIC TUBE DIVISION
SENECA FALLS, NEW YORK

A Technical Publication
MAY, 1965

File Under
PHOTOCONDUCTORS

SPECTRAL RESPONSE

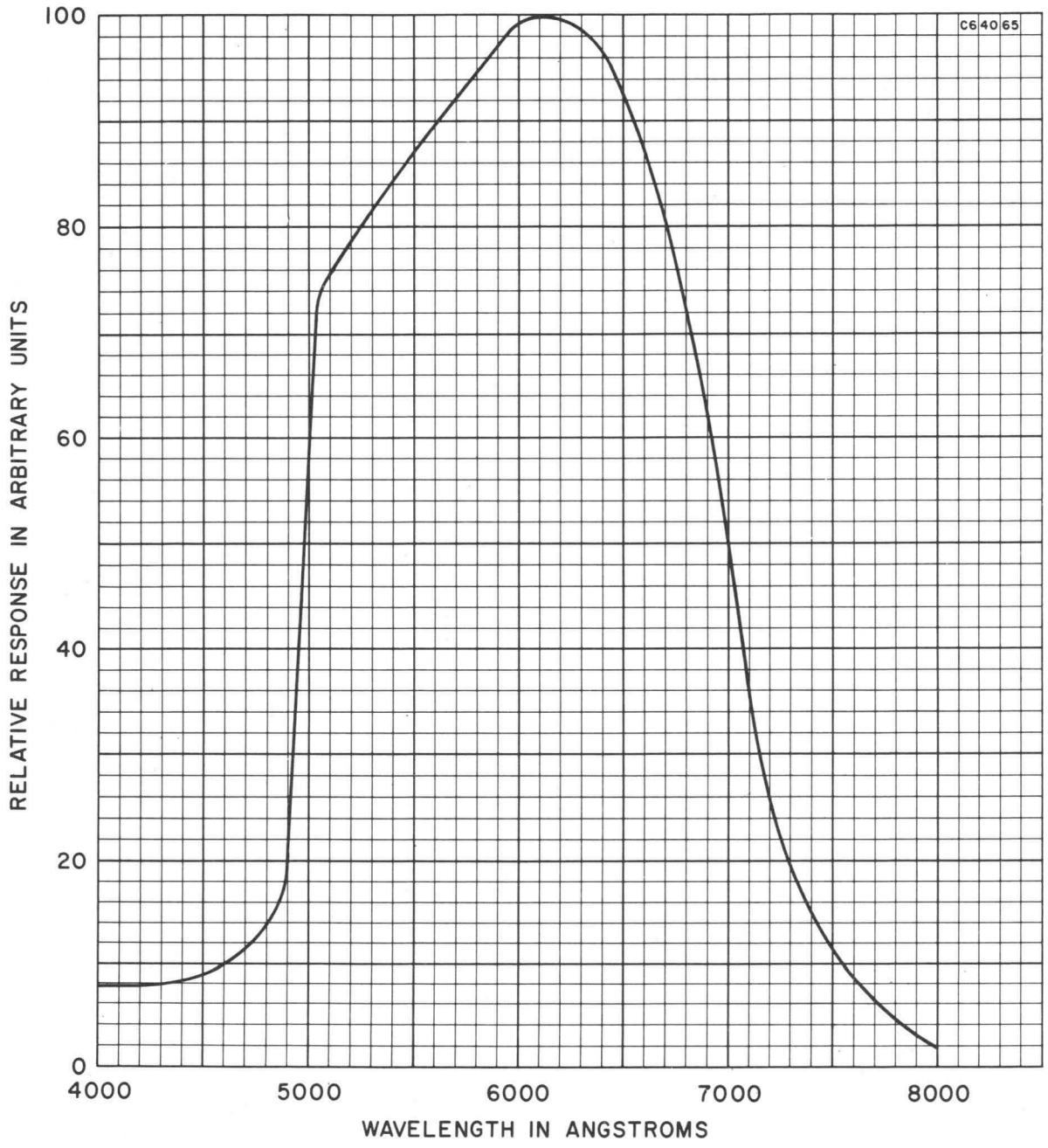

SPECTRAL CHARACTERISTIC OF HUMAN EYE, TUNGSTEN AND FLUORESCENT LAMPS

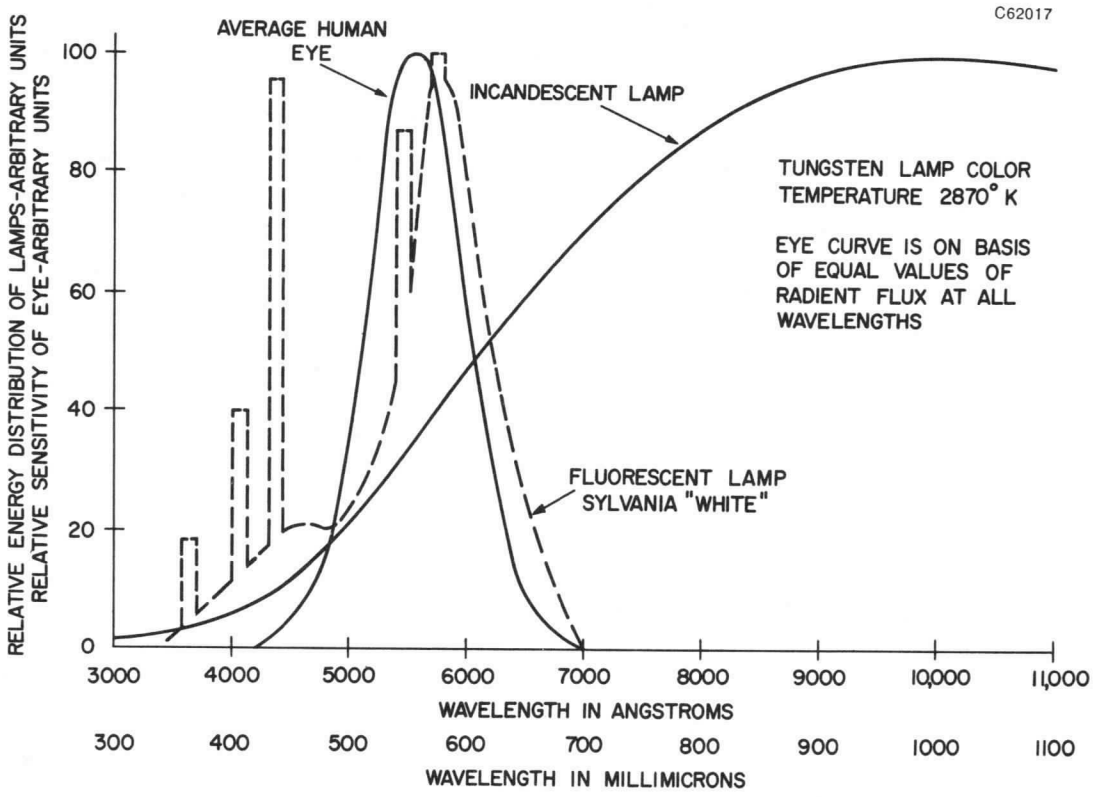

AVERAGE CHARACTERISTICS

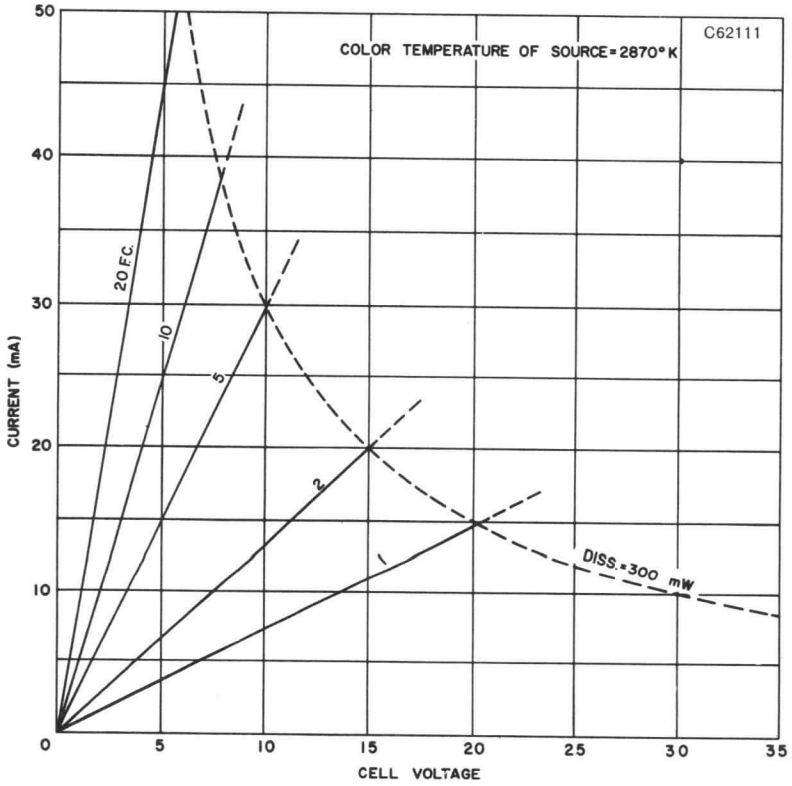

PERMISSIBLE DISSIPATION AS A FUNCTION OF AMBIENT TEMPERATURE

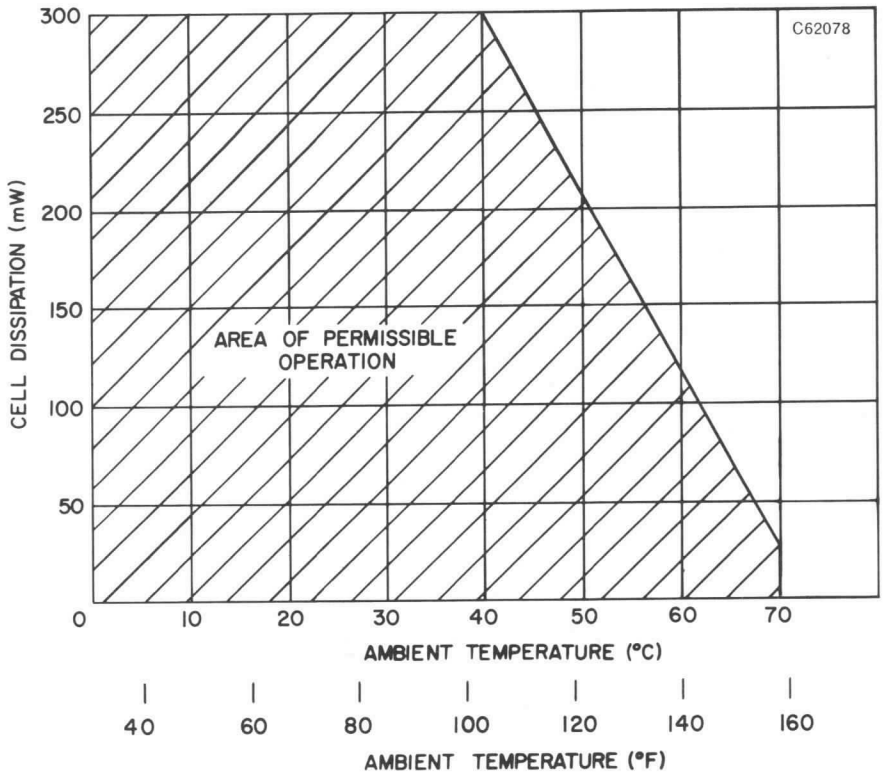

AVERAGE CHARACTERISTICS

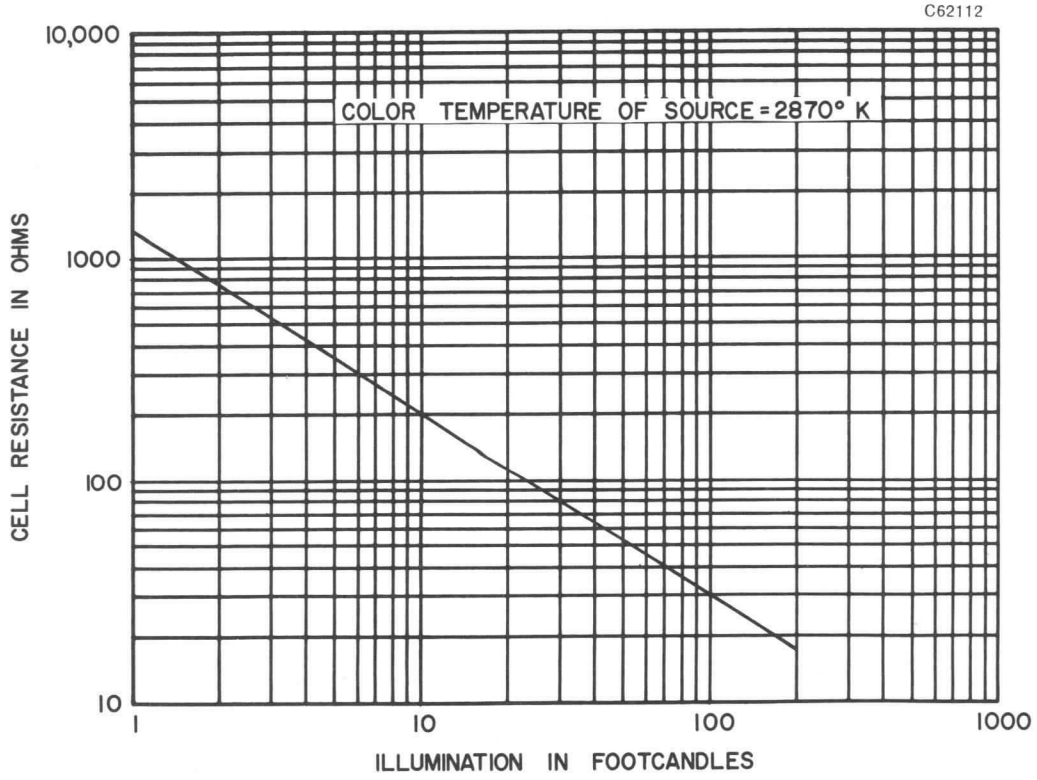

SYLVANIA

engineering data service

SYLVANIA
8346
8346-1
8346-7

GENERAL DATA

Spectral Response	See Curve
Wavelength of Max. Response	6100 ± 400 Angstroms
Sensitive Material	Cadmium-Sulfide
Shape of Sensitive Area	Circular
Construction	Hermetically Sealed in Glass
8346	Flexible Leads
8346-1	Push-Pin Base
8346-7	Bayonet Base
Outline	See Drawings
Operating Position	Any

ELECTRICAL DATA

RATINGS (Absolute Maximum Values)

Breakdown Voltage[2]	400 VAC
Dissipation	
T-amb = 25°C	300 mW
T-amb = 70°C	25 mW
Ambient Temperature Range	−40 to +70 °C
Illumination	Note 3

CHARACTERISTICS

Cell Resistance[4]	
Illumination 2 FC	
Color Temperature 2870°K	3000 Ohms
Dark Resistance[5]	300,000 Ohms Min.

NOTES:

1. *Minute increases in relative humidity will produce change in color.*
2. *Measured with cell in complete darkness at a pulse rate of 100 pps, 100 μ sec. duration. Voltage in excess of the rated value may damage the cell. Maximum DC voltage is limited by maximum dissipation and minimum dark resistance rating.*
3. *Care should be exercised to prevent localized overheating of the sensitive surface when the cell is used with a lens system.*
4. *Measured after 60 minutes exposure to approximately 50 FC illumination (ambient room light).*
5. *Measured in complete darkness, 10 seconds after removal of 2 FC illumination.*

OUTLINE 8346-1

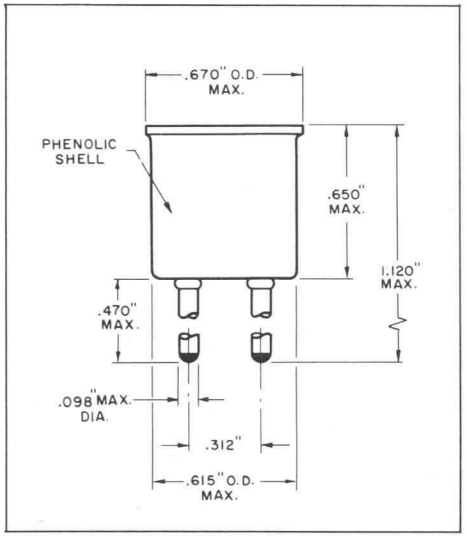

OUTLINE 8346-7

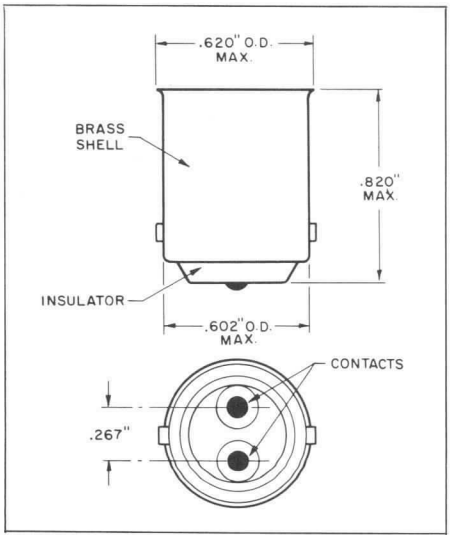

QUICK REFERENCE DATA

The Sylvania Types 8346, 8346-1 and 8346-7 are cadmium sulfide photoconductive cells featuring high sensitivity and hermetically sealed-in-glass construction. The cell is backfilled with gas for a high dissipation safety factor and high voltage capability and includes a blue-dot compound which turns pink[1] if the cell envelope becomes damaged. They have a resistance of 3000 ohms at 2 FC. They are designed for use in a wide variety of industrial applications, and are particularly suited to direct operation of relays.

OUTLINE 8346

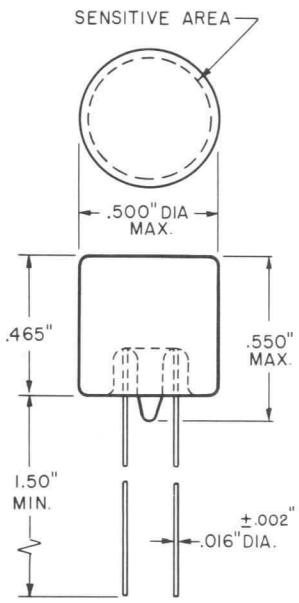

SYLVANIA ELECTRIC PRODUCTS INC.

Electronic Components Group
ELECTRONIC TUBE DIVISION
EMPORIUM, PA.

A Technical Publication
MAY, 1965

File Under
PHOTOCONDUCTORS

SPECTRAL RESPONSE

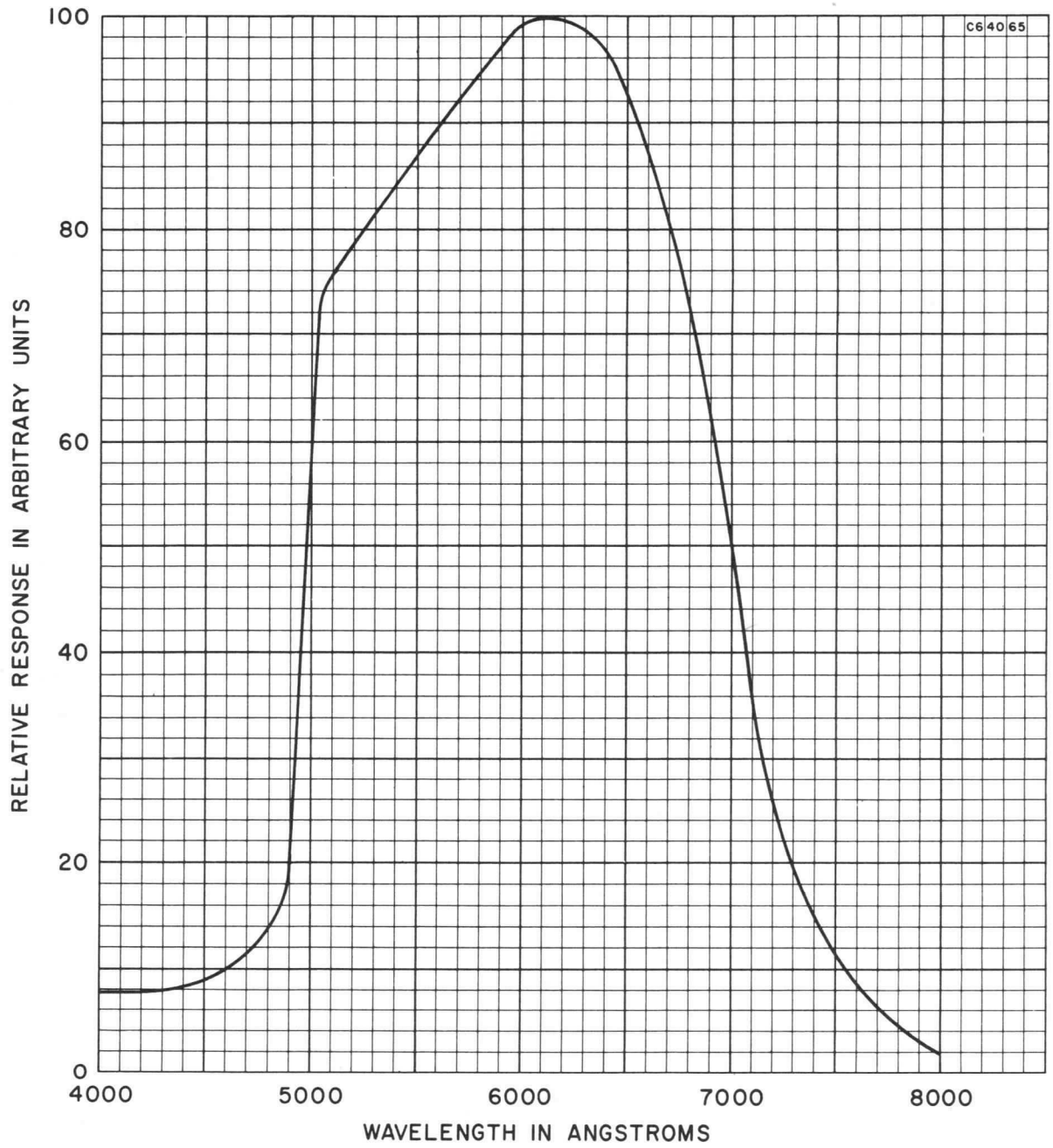

SPECTRAL CHARACTERISTIC OF HUMAN EYE, TUNGSTEN AND FLUORESCENT LAMPS

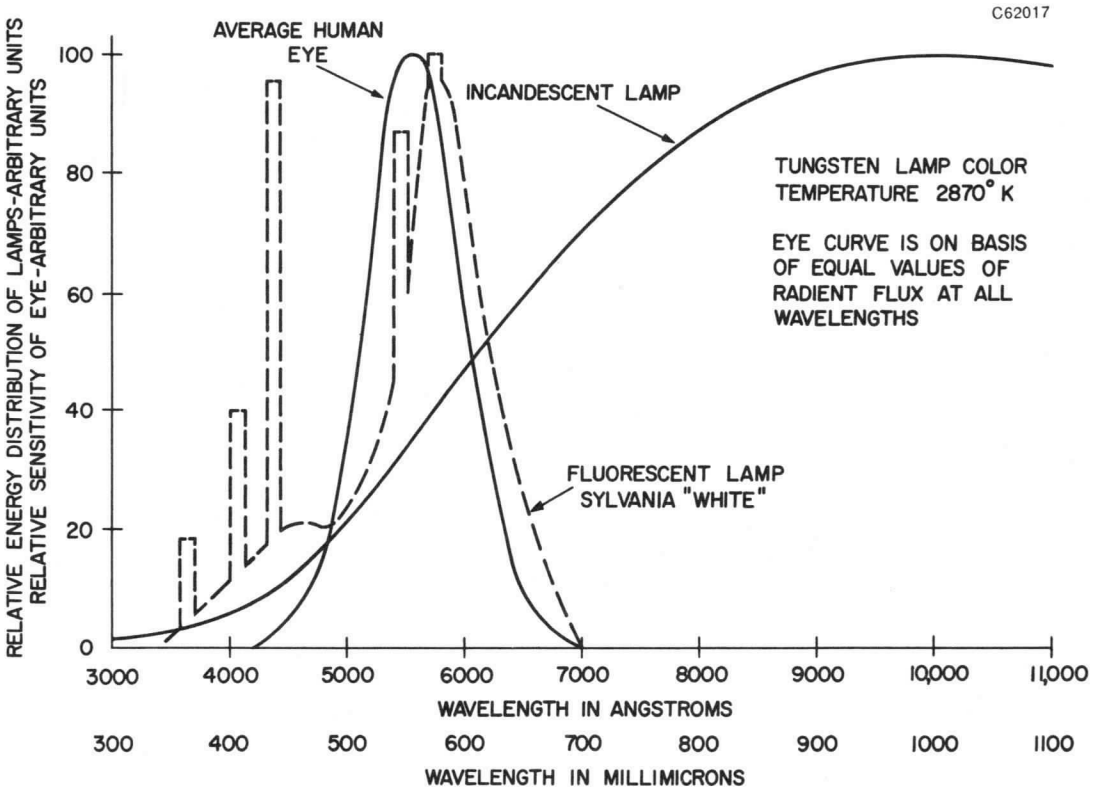

AVERAGE CHARACTERISTICS

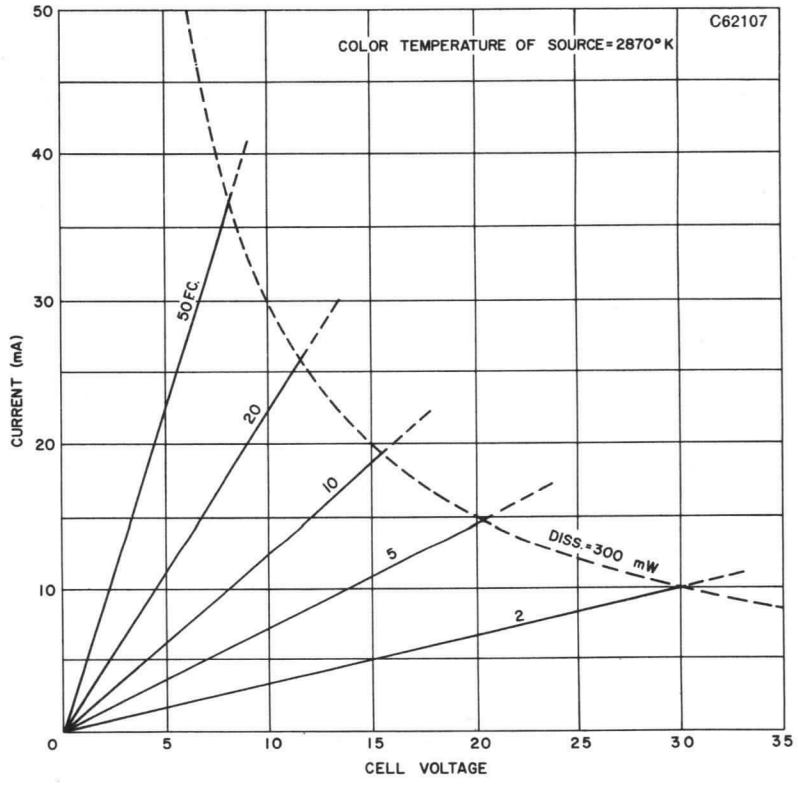

PERMISSIBLE DISSIPATION AS A FUNCTION OF AMBIENT TEMPERATURE

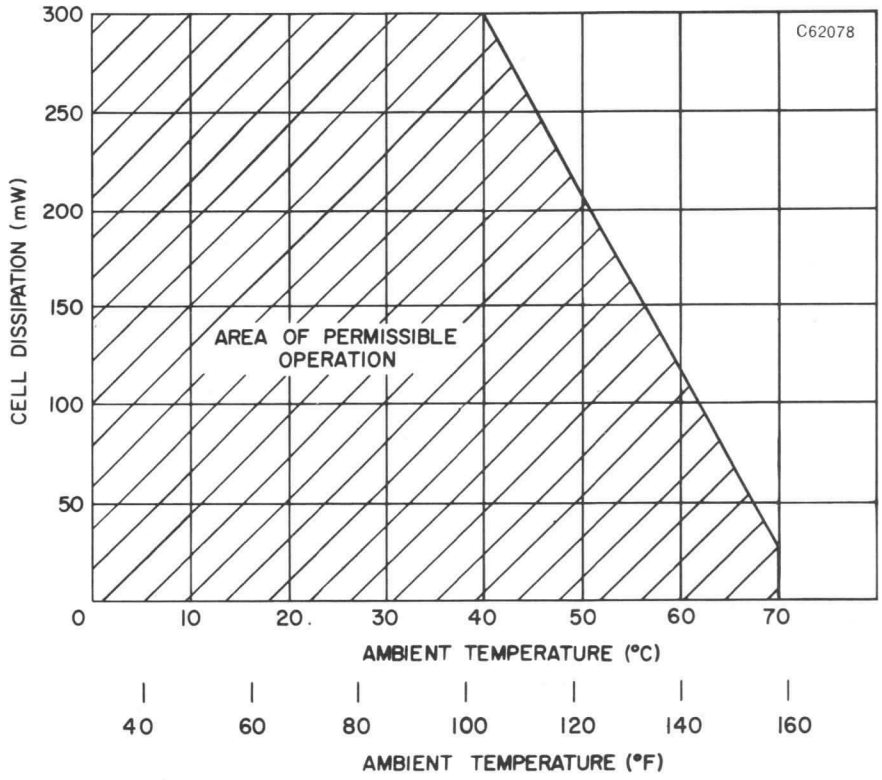

AVERAGE CHARACTERISTICS

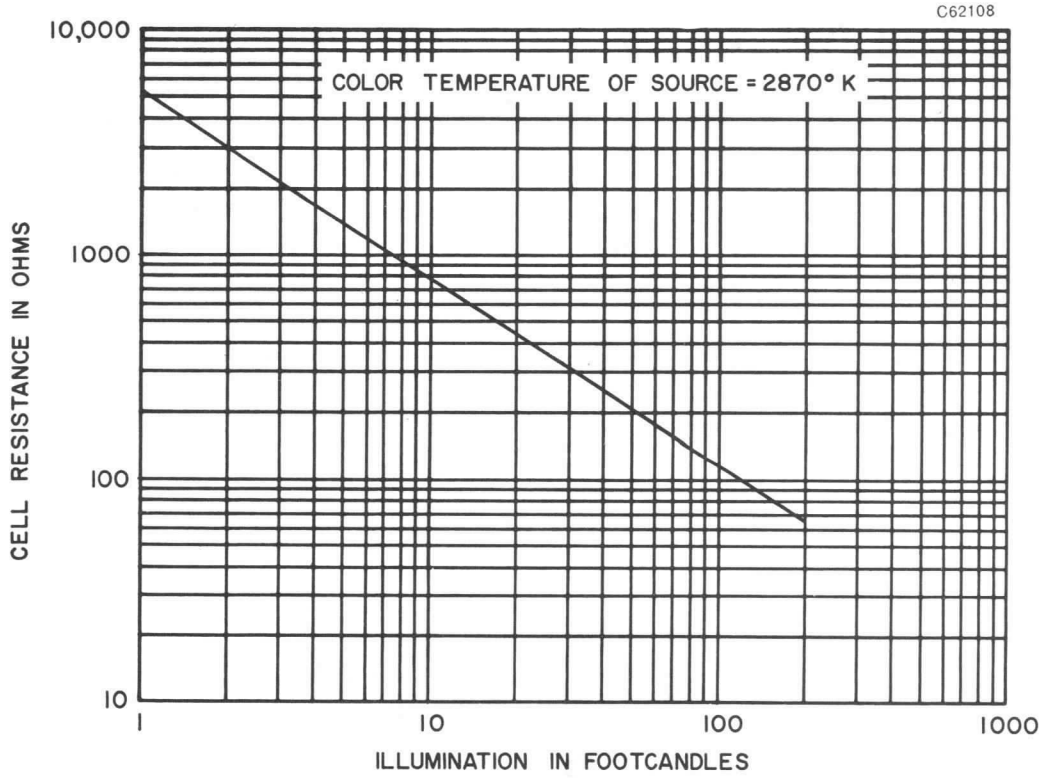

GENERAL DATA

Spectral Response	See Curve
Wavelength of Max. Response	6100 ± 400 Angstroms
Sensitive Material	Cadmium-Sulfide
Shape of Sensitive Area	Circular
Construction	Hermetically Sealed in Glass
8347	Flexible Leads
8347-1	Push-Pin Base
8347-7	Bayonet Base
Outline	See Drawings
Operating Position	Any

ELECTRICAL DATA

RATINGS (Absolute Maximum Values)

Breakdown Voltage[2]	400 VAC
Dissipation	
T-amb = 25°C	300 mW
T-amb = 70°C	25 mW
Ambient Temperature Range	−40 to +70 °C
Illumination	Note 3

CHARACTERISTICS

Cell Resistance[4]	
Illumination 2 FC	
Color Temperature 2870°K	16,000 Ohms
Dark Resistance[5]	1,600,000 Ohms Min.

NOTES:

1. *Minute increases in relative humidity will produce change in color.*
2. *Measured with cell in complete darkness at a pulse rate of 100 pps, 100 μ sec. duration. Voltage in excess of the rated value may damage the cell. Maximum DC voltage is limited by maximum dissipation and minimum dark resistance rating.*
3. *Care should be exercised to prevent localized overheating of the sensitive surface when the cell is used with a lens system.*
4. *Measured after 60 minutes exposure to approximately 50 FC illumination (ambient room light).*
5. *Measured in complete darkness, 10 seconds after removal of 2 FC illumination.*

OUTLINE 8347-1

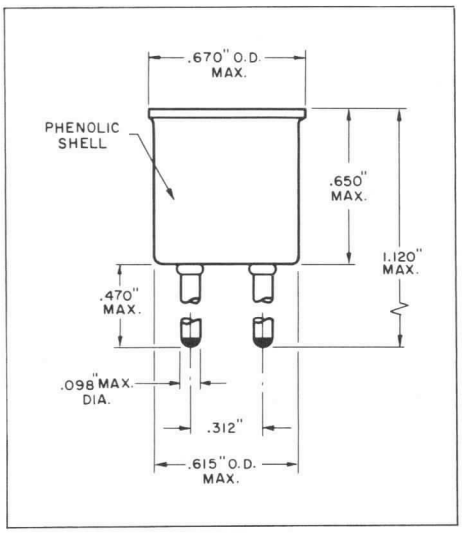

OUTLINE 8347-7

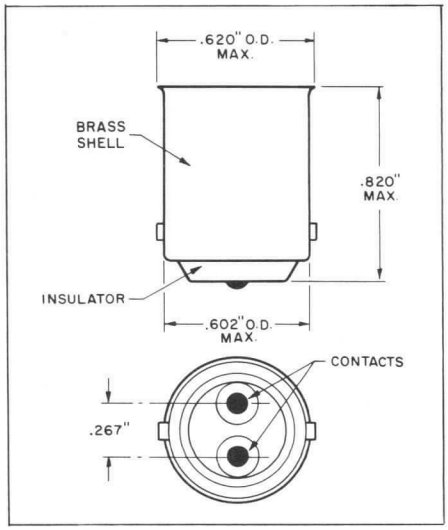

QUICK REFERENCE DATA

The Sylvania Types 8347, 8347-1 and 8347-7 are cadmium sulfide photoconductive cells featuring high sensitivity and hermetically sealed-in-glass construction. The cell is backfilled with gas for a high dissipation safety factor and high voltage capability and includes a blue-dot compound which turns pink[1] if the cell envelope becomes damaged. They have a cell resistance of 16,000 ohms at 2 FC. They are designed for use in a wide variety of industrial applications, and are particularly suited to direct operation of relays.

OUTLINE 8347

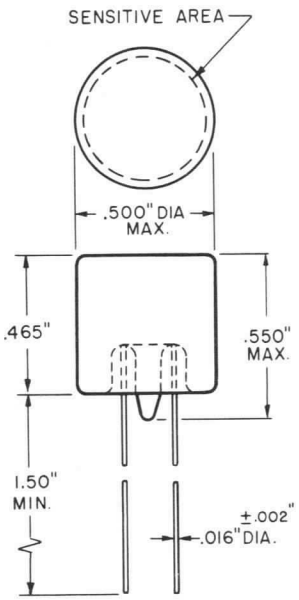

SYLVANIA ELECTRIC PRODUCTS INC.

Electronic Components Group
ELECTRONIC TUBE DIVISION
EMPORIUM, PA.

A Technical Publication
MAY, 1965

File Under
PHOTOCONDUCTORS

SPECTRAL RESPONSE

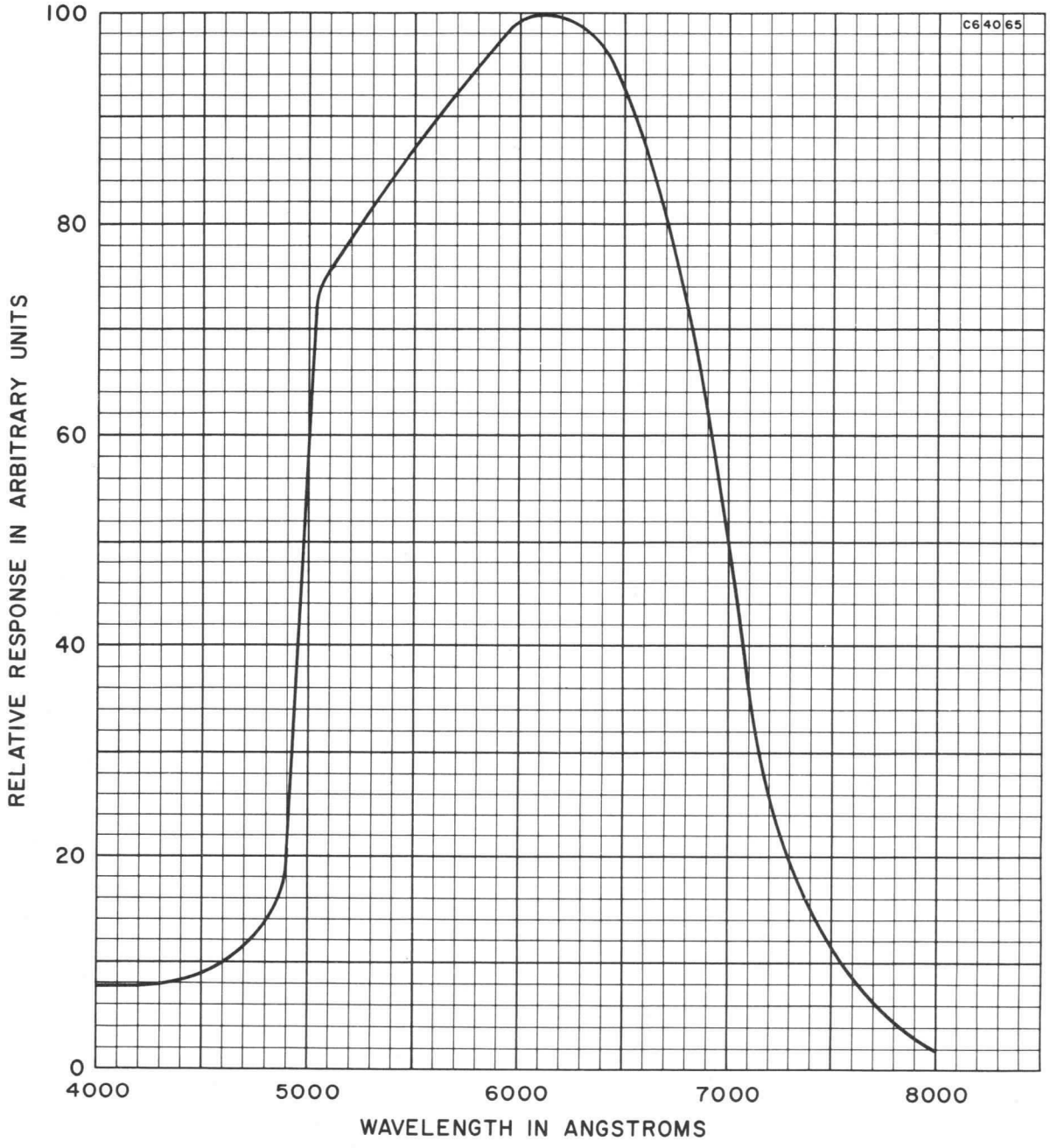

SPECTRAL CHARACTERISTIC OF HUMAN EYE, TUNGSTEN AND FLUORESCENT LAMPS

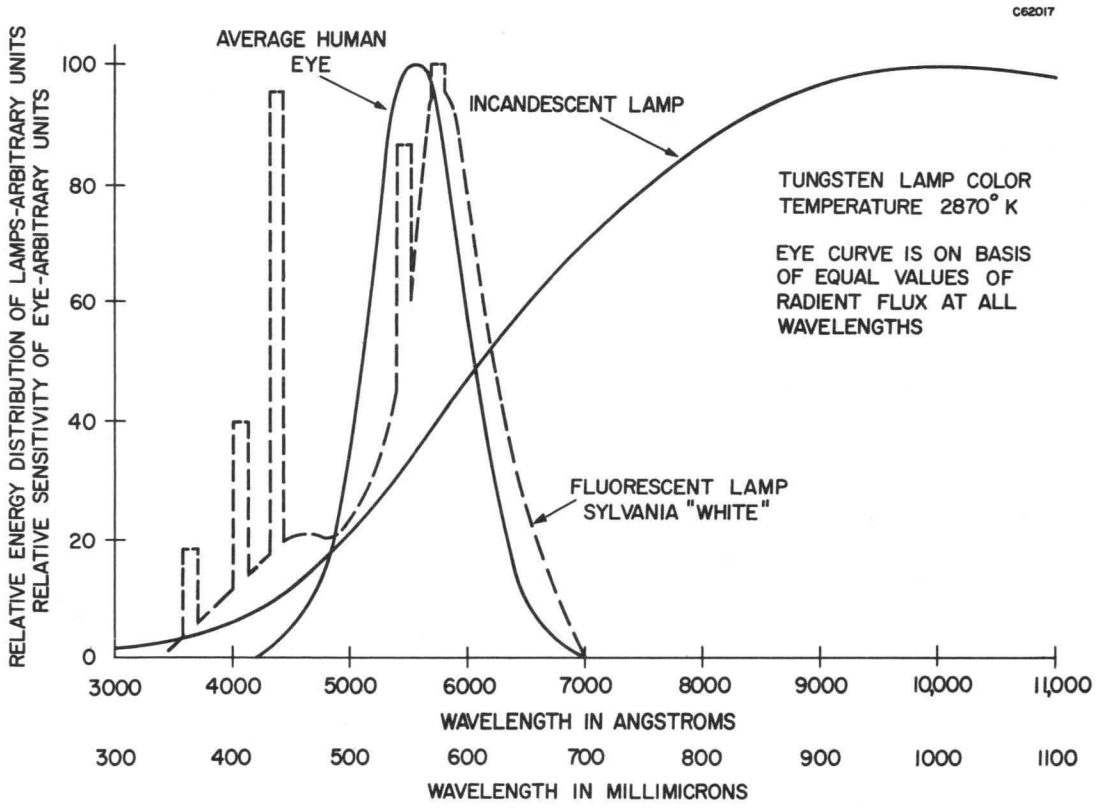

AVERAGE CHARACTERISTICS

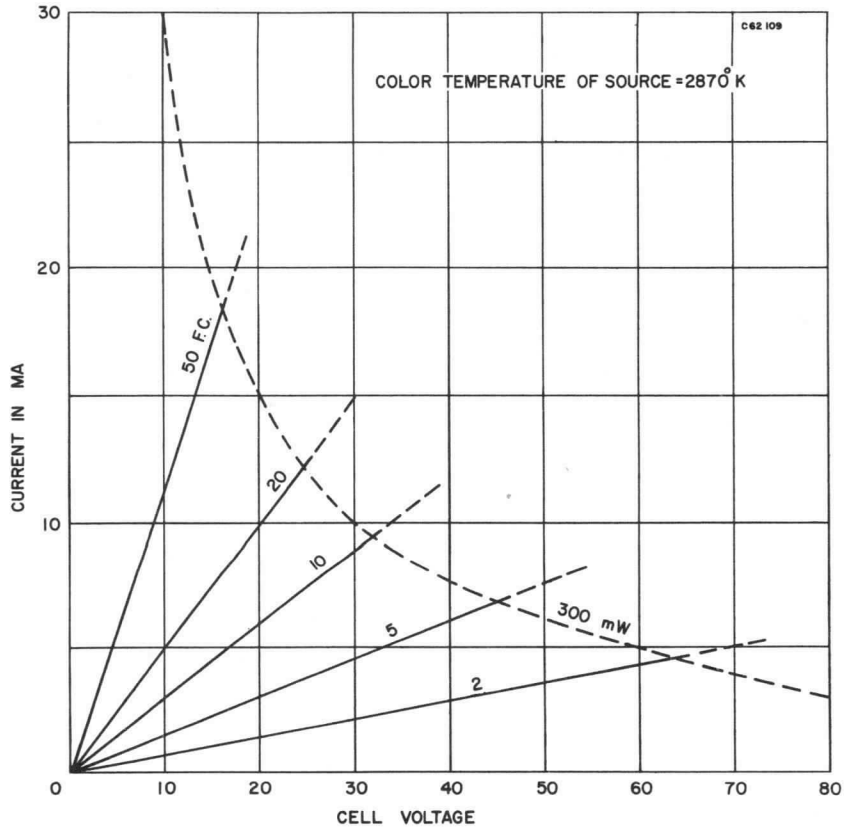

PERMISSIBLE DISSIPATION AS A FUNCTION OF AMBIENT TEMPERATURE

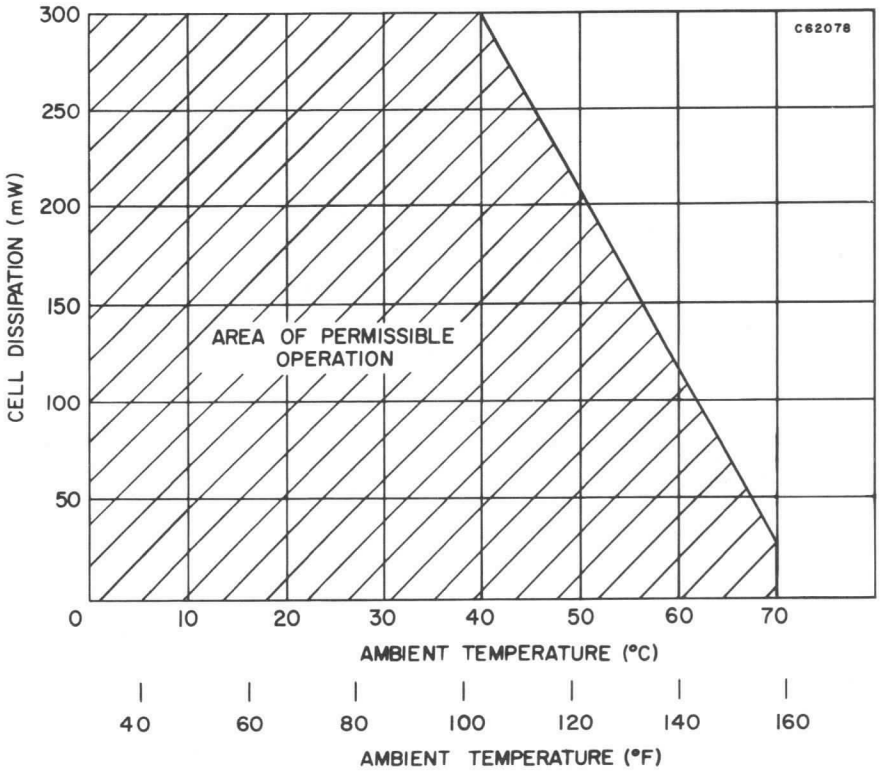

AVERAGE CHARACTERISTICS

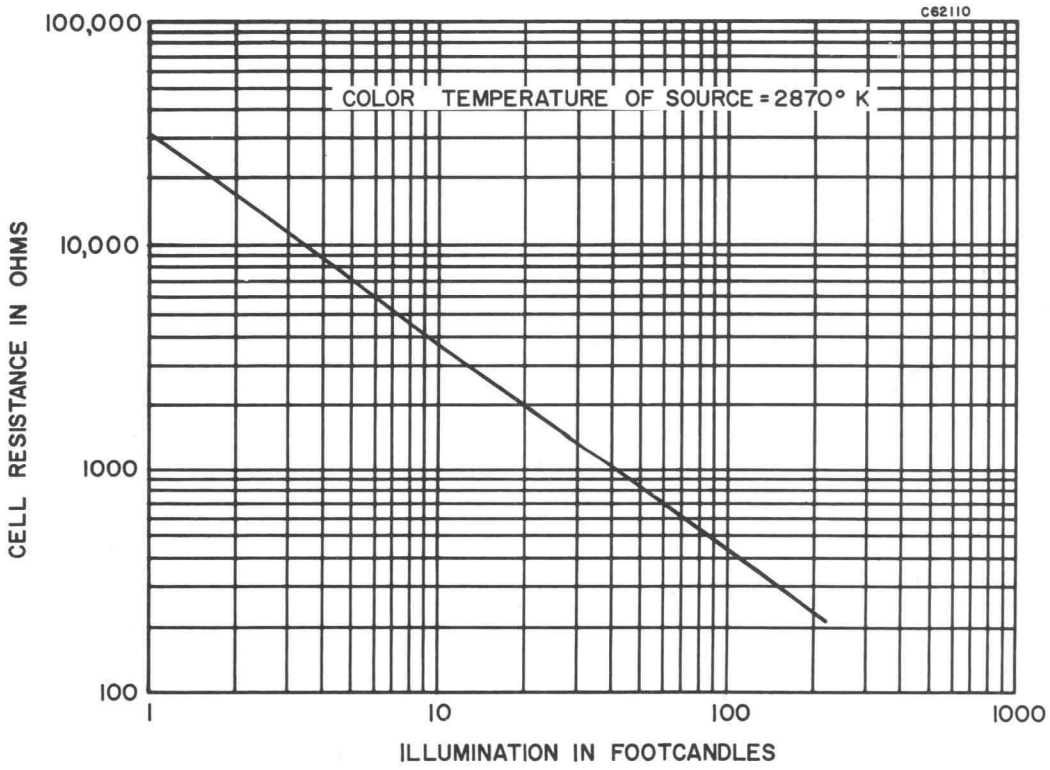

GENERAL DATA

Spectral Response	See Curve
Wavelength of Maximum Response	6100 ± 400 Angstroms
Sensitive Material	Cadmium-Sulfide
Sensitive Area	Viewed from End
Construction	Hermetically Sealed in Glass with Flexible Leads
Outline	See Drawing
Operating Position	Any

ELECTRICAL DATA

RATINGS (Absolute Maximum Values)

Breakdown Voltage[2]	150 Volts
Dissipation	
T-amb = 25°C	50 mW
T-amb = 70°C	5 mW
Ambient Temperature Range	−40 to +70 °C
Illumination	Note 3

CHARACTERISTICS

Cell Resistance[4]		
Illumination 2 FC		
Color Temperature 2870°C	1500 Ohms	
Dark Resistance[5]	150,000 Ohms	Min.

NOTES:

1. *Minute increases in relative humidity will produce change in color.*
2. *Measured with cell in complete darkness at a pulse rate of 100 pps, 100 μ sec. duration. Voltage in excess of the rated value may damage the cell. Maximum DC or AC peak voltage is limited by maximum dissipation and minimum dark resistance rating.*
3. *Care should be exercised to prevent localized over-heating of the sensitive surface when the cell is used with a lens system.*
4. *Measured after 60 minutes minimum exposure to approximately 50 FC illumination (ambient room light).*
5. *Measured in complete darkness, 10 seconds after removal of 2 FC illumination.*

QUICK REFERENCE DATA

The Sylvania Type 8474 is a miniature cadmium-sulfide photoconductive cell featuring high sensitivity and hermetically sealed - in - glass construction. The cell is gaseous back-filled for a high dissipation safety factor and includes a blue-dot compound which turns pink[1] if the cell envelope becomes damaged. The 8474 is designed for use in a wide variety of industrial applications.

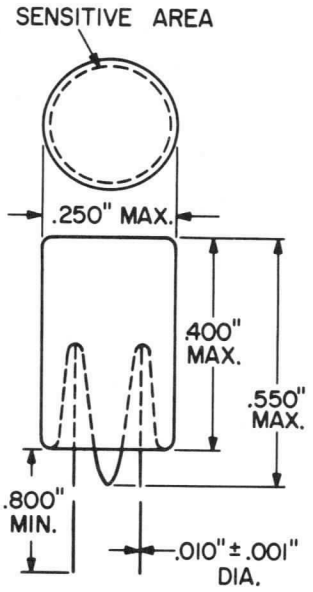

SYLVANIA ELECTRIC PRODUCTS INC.

Electronic Components Group
ELECTRONIC TUBE DIVISION
EMPORIUM, PA.

A Technical Publication
NOVEMBER, 1964

File Under
PHOTOCONDUCTORS

SPECTRAL RESPONSE

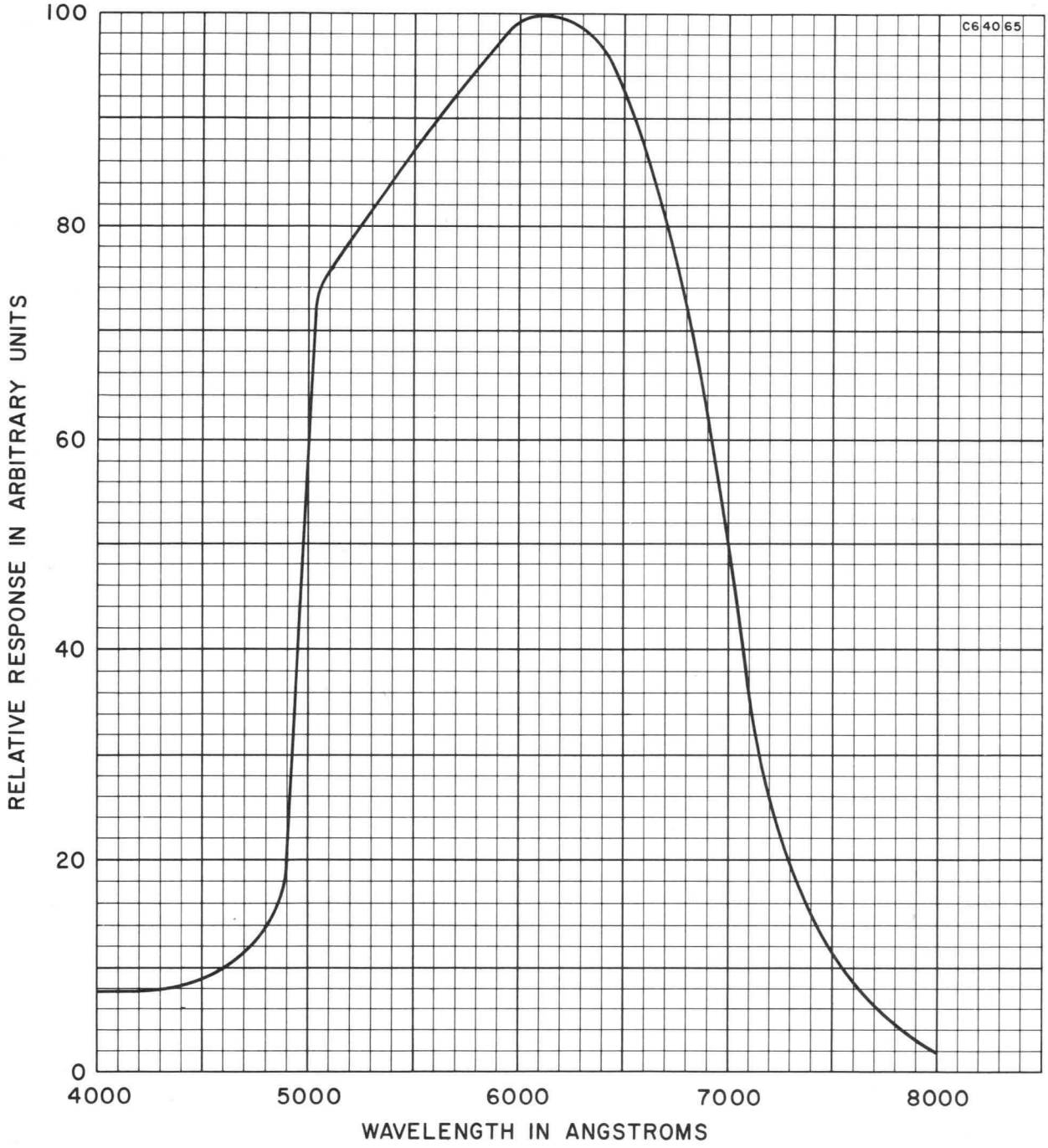

SPECTRAL CHARACTERISTIC OF HUMAN EYE, TUNGSTEN AND FLUORESCENT LAMPS

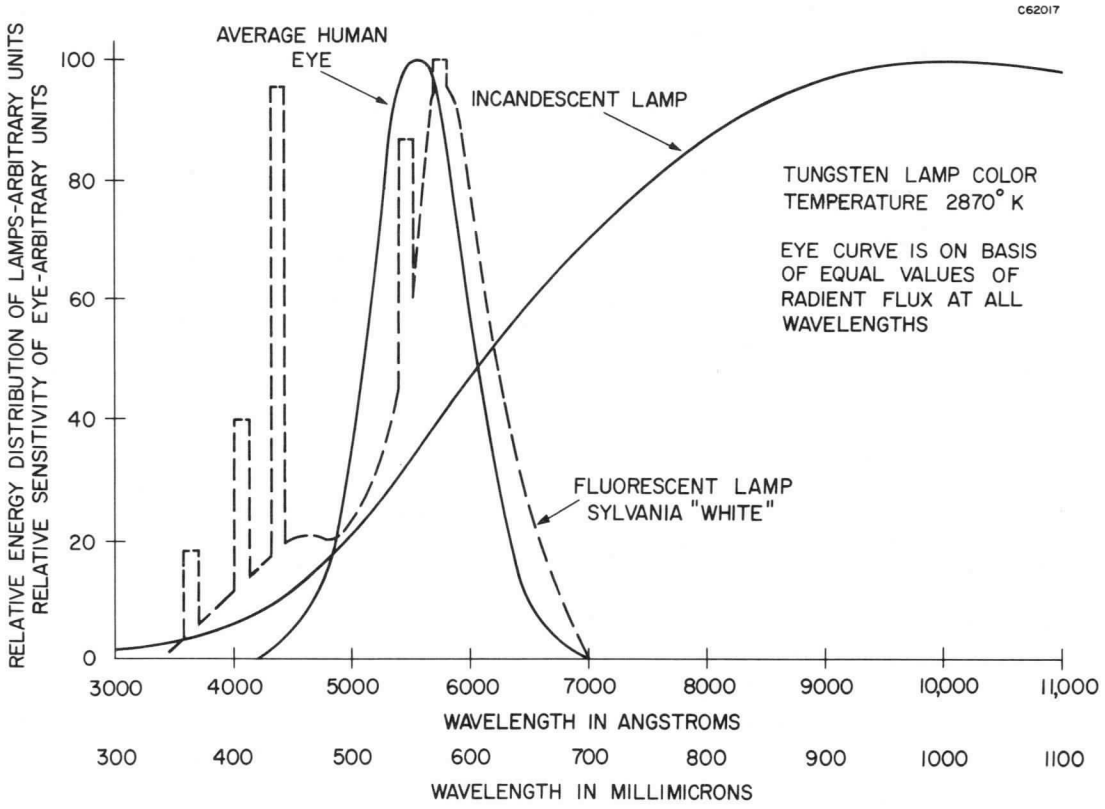

PERMISSIBLE DISSIPATION AS A FUNCTION OF AMBIENT TEMPERATURE

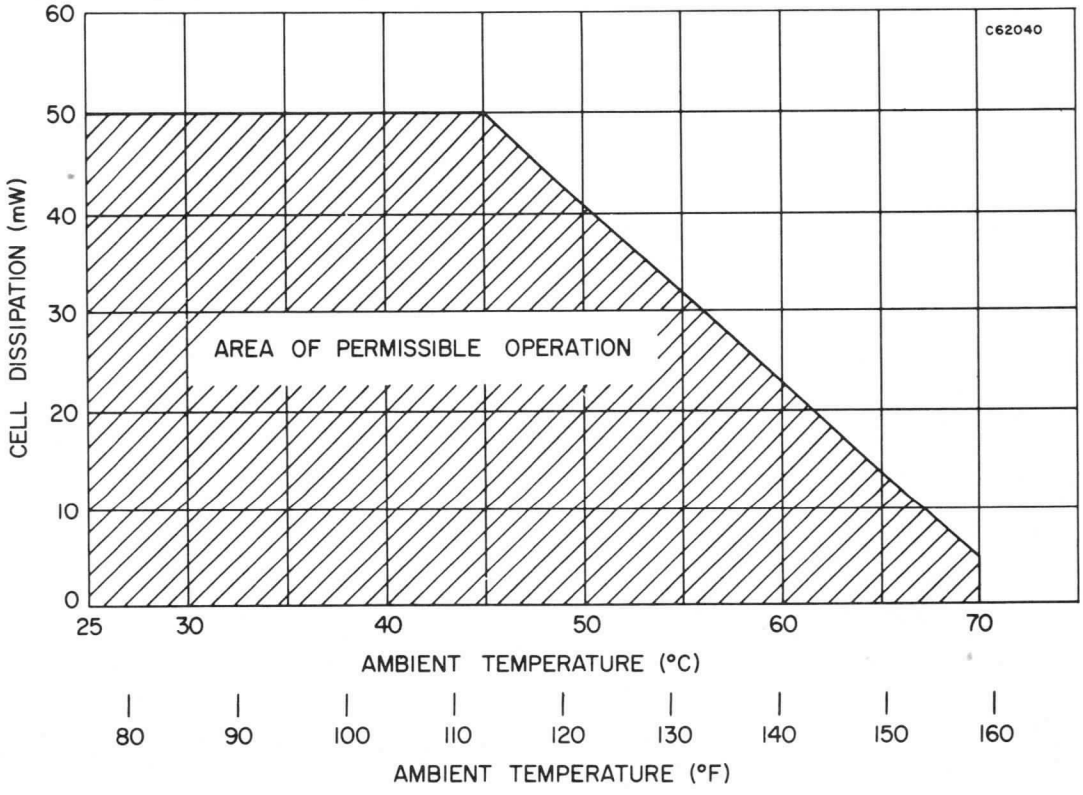

CELL RESISTANCE VS ILLUMINATION

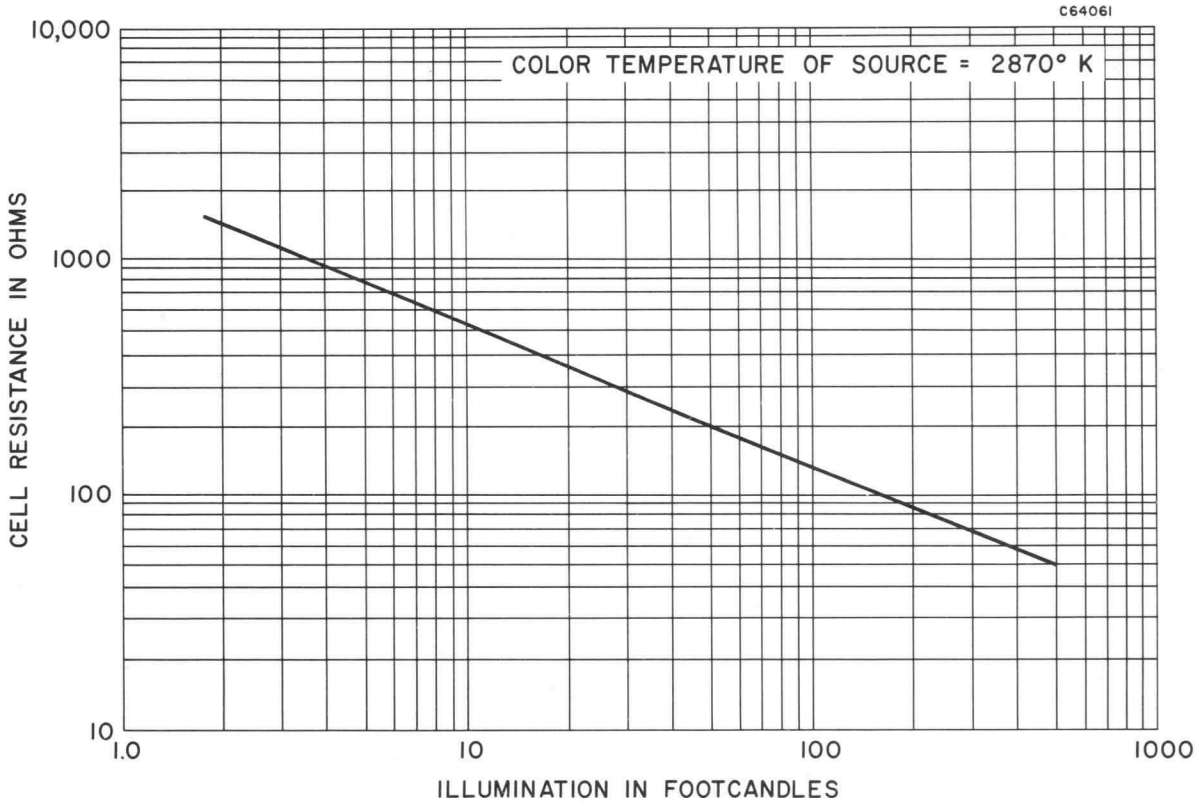

CELL CURRENT AND DISSIPATION VS VOLTAGE

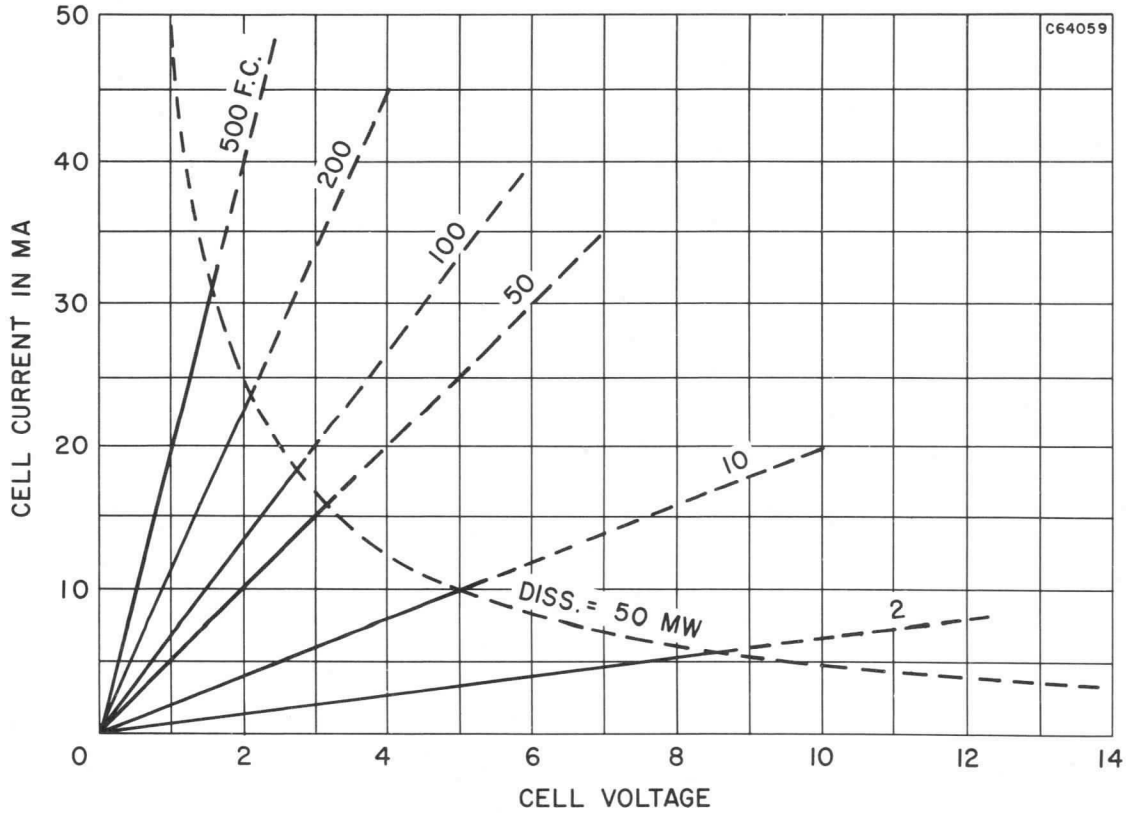

GENERAL DATA

Spectral Response	See Curve
Wavelength of Maximum Response	6100 ± 400 Angstroms
Sensitive Material	Cadmium-Sulfide
Sensitive Area	Viewed from End
Construction	Hermetically Sealed in Glass with Flexible Leads
Outline	See Drawing
Operating Position	Any

ELECTRICAL DATA

RATINGS (Absolute Maximum Values)

Breakdown Voltage[2]	200 Volts
Dissipation	
T-amb = 25°C	50 mW
T-amb = 70°C	5 mW
Ambient Temperature Range	−40 to +70 °C
Illumination	Note 3

CHARACTERISTICS

Cell Resistance[4]		
Illumination 2 FC		
Color Temperature 2870°K	3000 Ohms	
Dark Resistance[5]	300,000 Ohms	Min.

NOTES:

1. *Minute increases in relative humidity will produce change in color.*
2. *Measured with cell in complete darkness at a pulse rate of 100 pps, 100 μ sec. duration. Voltage in excess of the rated value may damage the cell. Maximum DC or AC peak voltage is limited by maximum dissipation and minimum dark resistance rating.*
3. *Care should be exercised to prevent localized over heating of the sensitive surface when the cell is used with a lens system.*
4. *Measured after 60 minutes minimum exposure to approximately 50 FC illumination (ambient room light).*
5. *Measured in complete darkness, 10 seconds after removal of 2 FC illumination.*

QUICK REFERENCE DATA

The Sylvania Type 8475 is a miniature cadmium-sulfide photoconductive cell featuring high sensitivity and hermetically sealed - in - glass construction. The cell is gaseous back-filled for a high dissipation safety factor and includes a blue-dot compound which turns pink[1] if the cell envelope becomes damaged. The 8475 is designed for use in a wide variety of industrial applications.

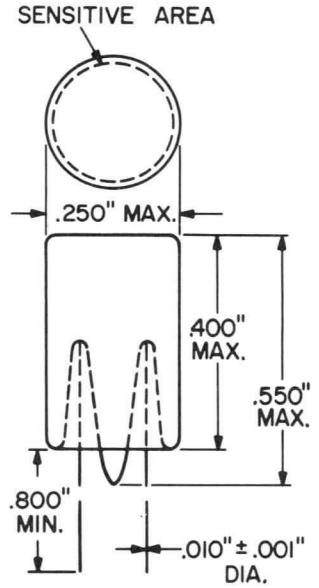

SYLVANIA ELECTRIC PRODUCTS INC.

Electronic Components Group
ELECTRONIC TUBE DIVISION
EMPORIUM, PA.

A Technical Publication
NOVEMBER, 1964

File Under
PHOTOCONDUCTORS

SPECTRAL RESPONSE

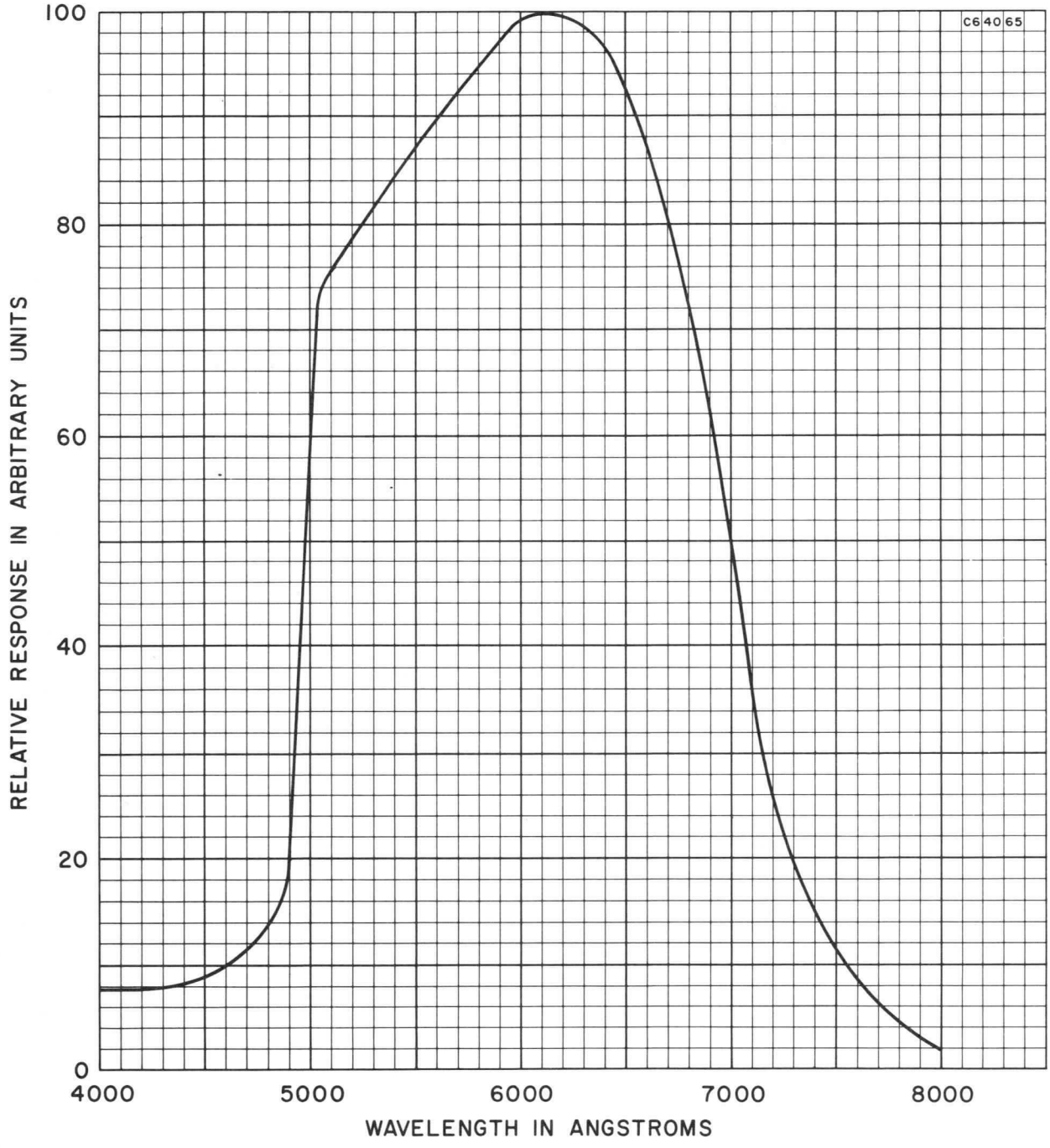

SPECTRAL CHARACTERISTIC OF HUMAN EYE, TUNGSTEN AND FLUORESCENT LAMPS

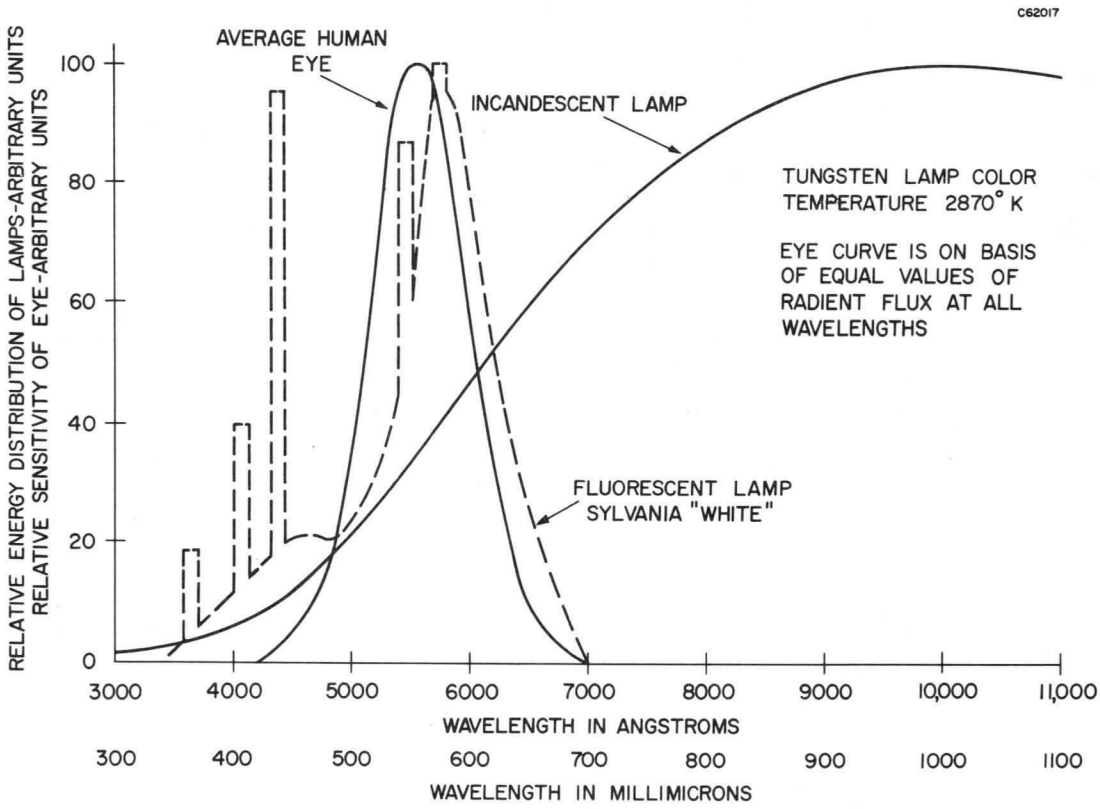

PERMISSIBLE DISSIPATION AS A FUNCTION OF AMBIENT TEMPERATURE

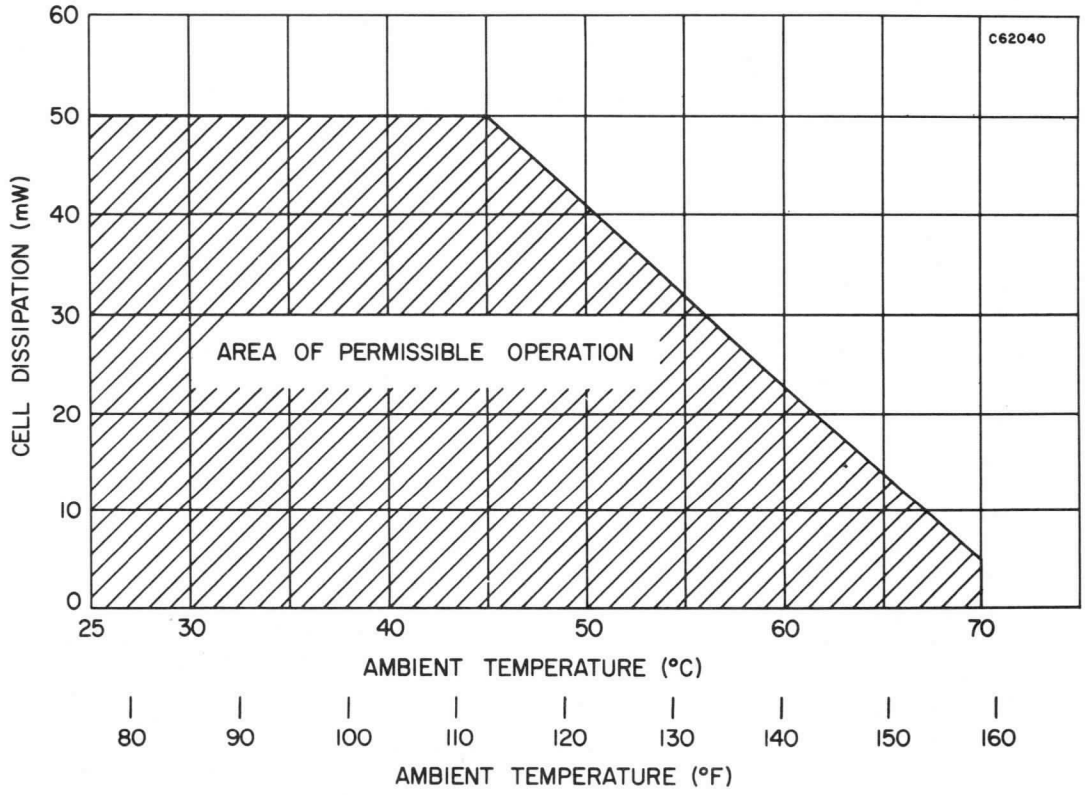

CELL RESISTANCE VS ILLUMINATION

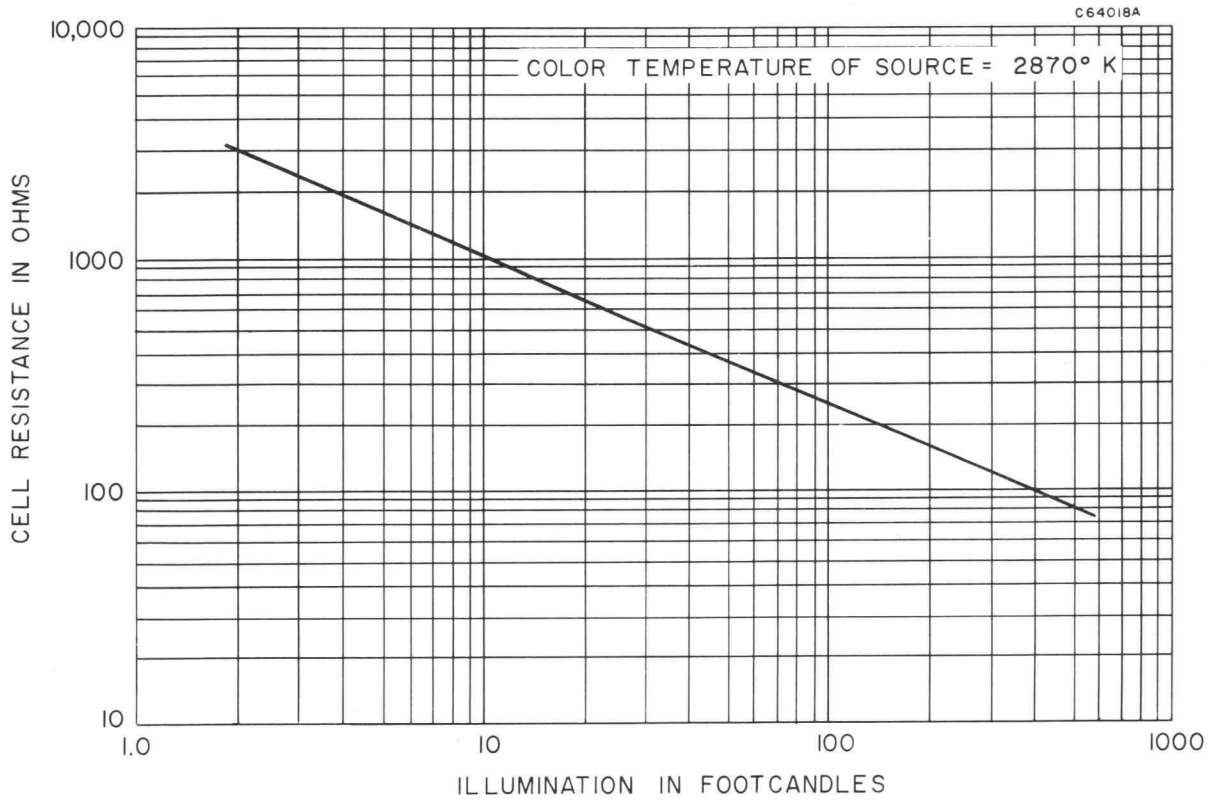

CELL CURRENT AND DISSIPATION VS VOLTAGE

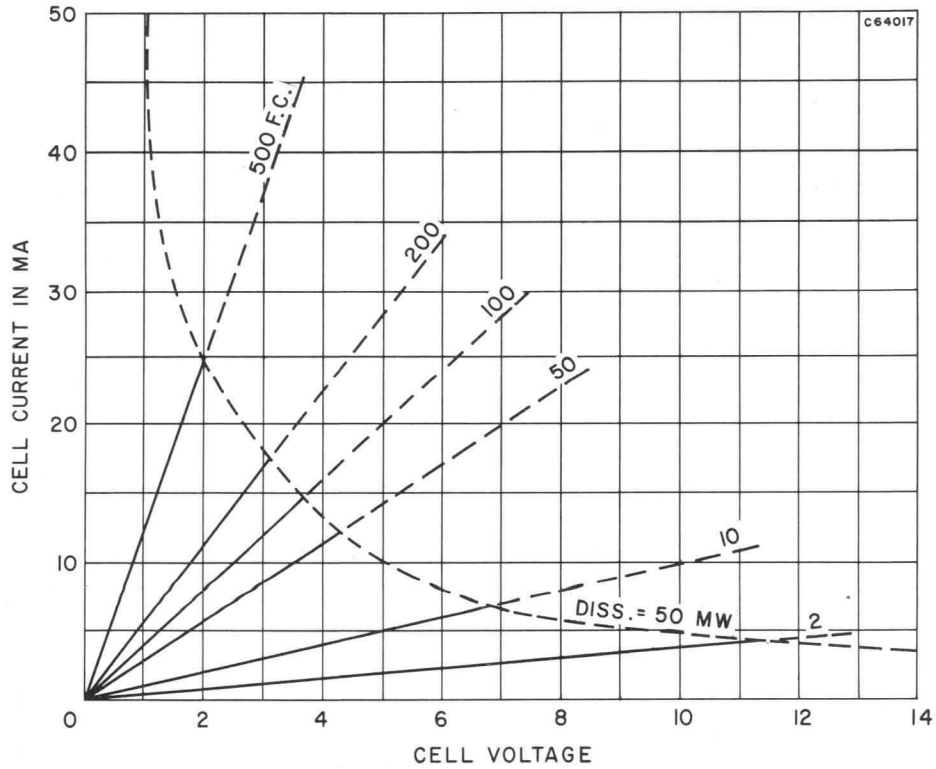

GENERAL DATA

Spectral Response	See Curve
Wavelength of Maximum Response	6100 ± 400 Angstroms
Sensitive Material	Cadmium-Sulfide
Sensitive Area	Viewed from End
Construction	Hermetically Sealed in Glass with Flexible Leads
Outline	See Drawing
Operating Position	Any

ELECTRICAL DATA

RATINGS (Absolute Maximum Values)

Breakdown Voltage[2]	300 Volts
Dissipation	
T-amb = 25°C	50 mW
T-amb = 70°C	5 mW
Ambient Temperature Range	−40 to +70 °C
Illumination	Note 3

CHARACTERISTICS

Cell Resistance[4]		
Illumination 2 FC		
Color Temperature 2870°K	6000 Ohms	
Dark Resistance[5]	600,000 Ohms	Min.

NOTES:

1. *Minute increases in relative humidity will produce change in color.*
2. *Measured with cell in complete darkness at a pulse rate of 100 pps, 100 μ sec. duration. Voltage in excess of the rated value may damage the cell. Maximum DC or AC peak voltage is limited by maximum dissipation and minimum dark resistance rating.*
3. *Care should be exercised to prevent localized over-heating of the sensitive surface when the cell is used with a lens system.*
4. *Measured after 60 minutes minimum exposure to approximately 50 FC illumination (ambient room light).*
5. *Measured in complete darkness, 10 seconds after removal of 2 FC illumination.*

QUICK REFERENCE DATA

The Sylvania Type 8476 is a miniature cadmium-sulfide photoconductive cell featuring high sensitivity and hermetically sealed - in - glass construction. The cell is gaseous back-filled for a high dissipation safety factor and includes a blue-dot compound which turns pink[1] if the cell envelope becomes damaged. The 8476 is designed for use in a wide variety of industrial applications.

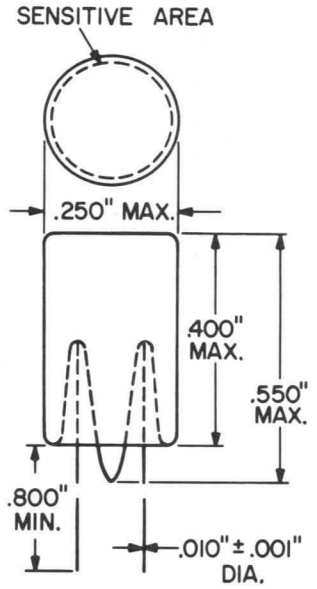

SYLVANIA ELECTRIC PRODUCTS INC.

Electronic Components Group
ELECTRONIC TUBE DIVISION
EMPORIUM, PA.

A Technical Publication
NOVEMBER, 1964

File Under
PHOTOCONDUCTORS

SPECTRAL RESPONSE

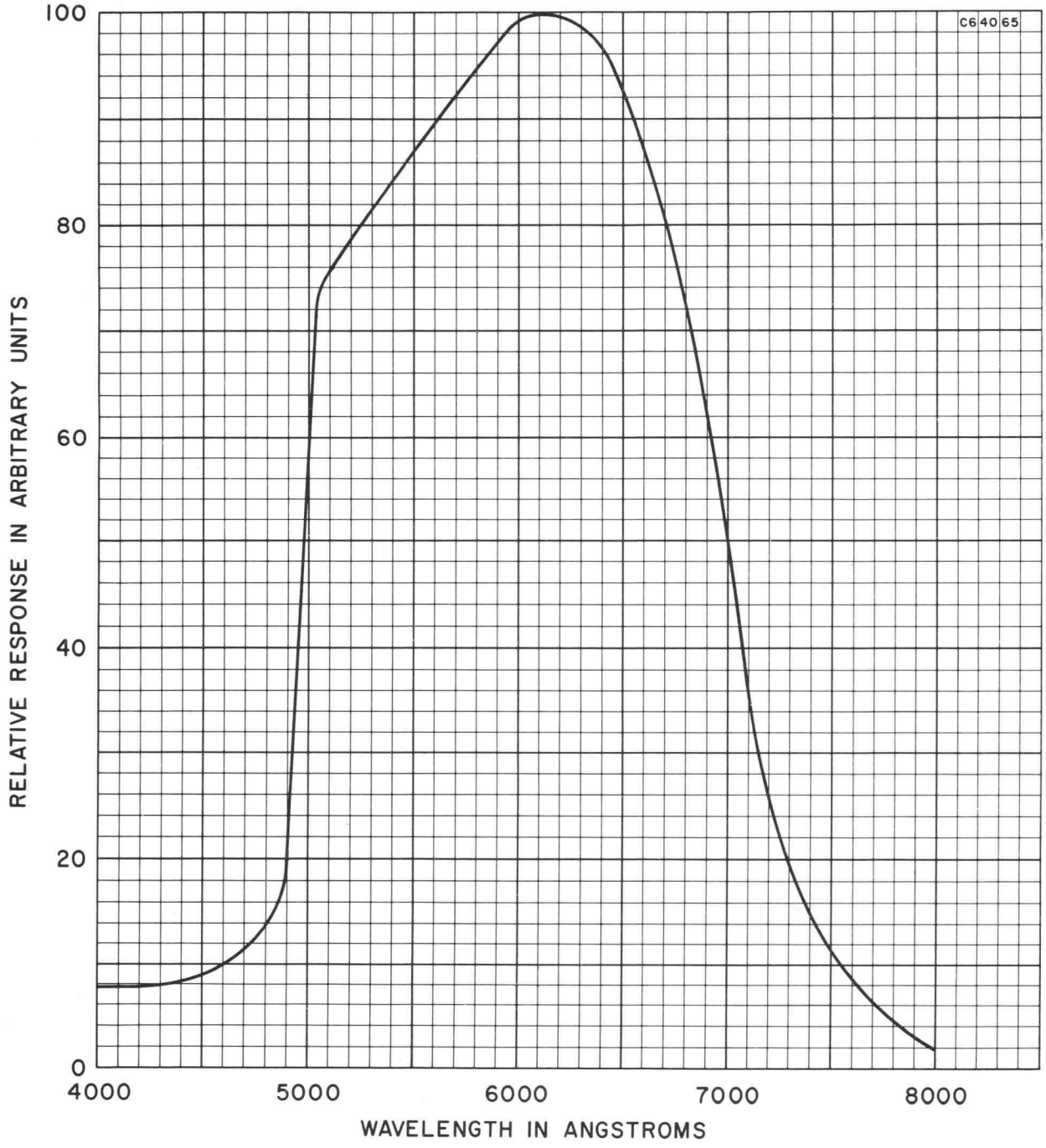

SPECTRAL CHARACTERISTIC OF HUMAN EYE, TUNGSTEN AND FLUORESCENT LAMPS

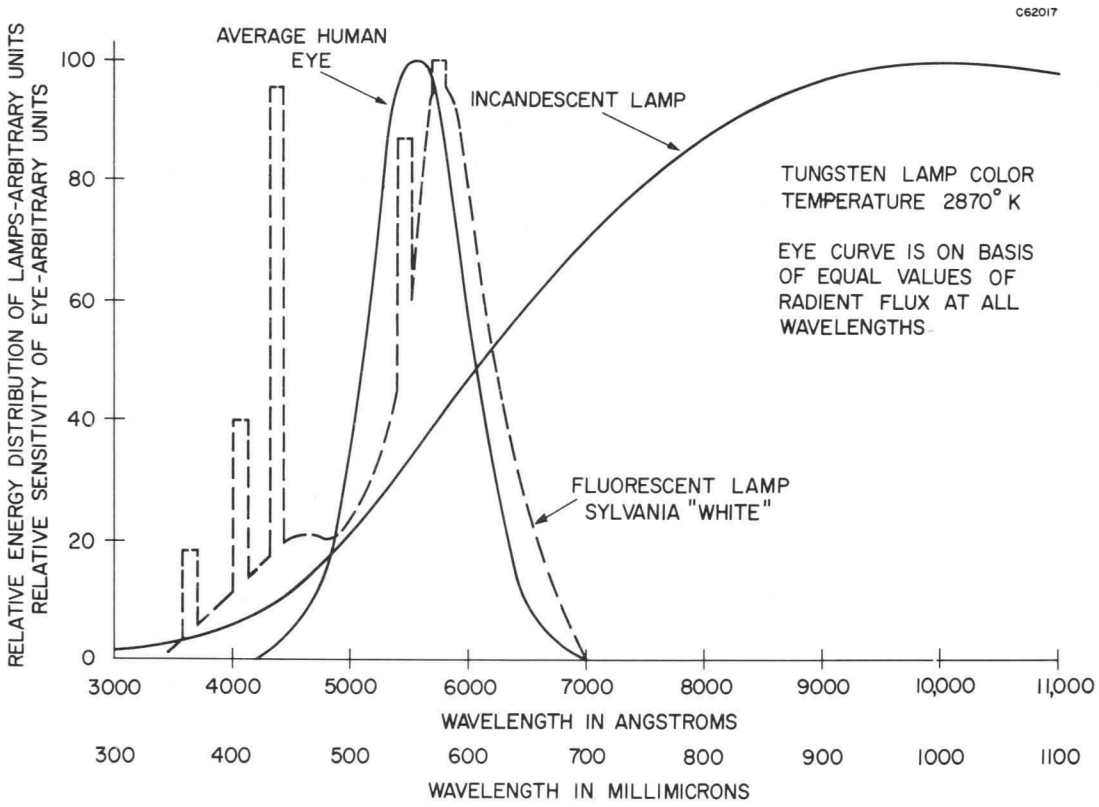

PERMISSIBLE DISSIPATION AS A FUNCTION OF AMBIENT TEMPERATURE

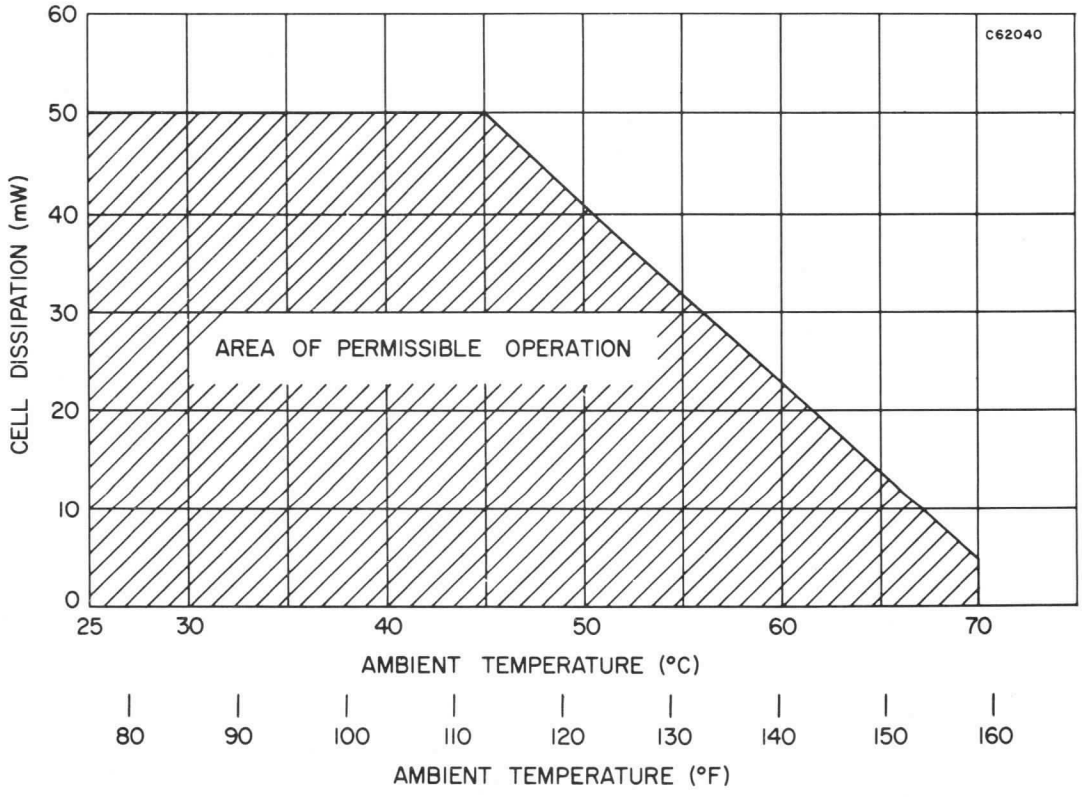

CELL RESISTANCE VS ILLUMINATION

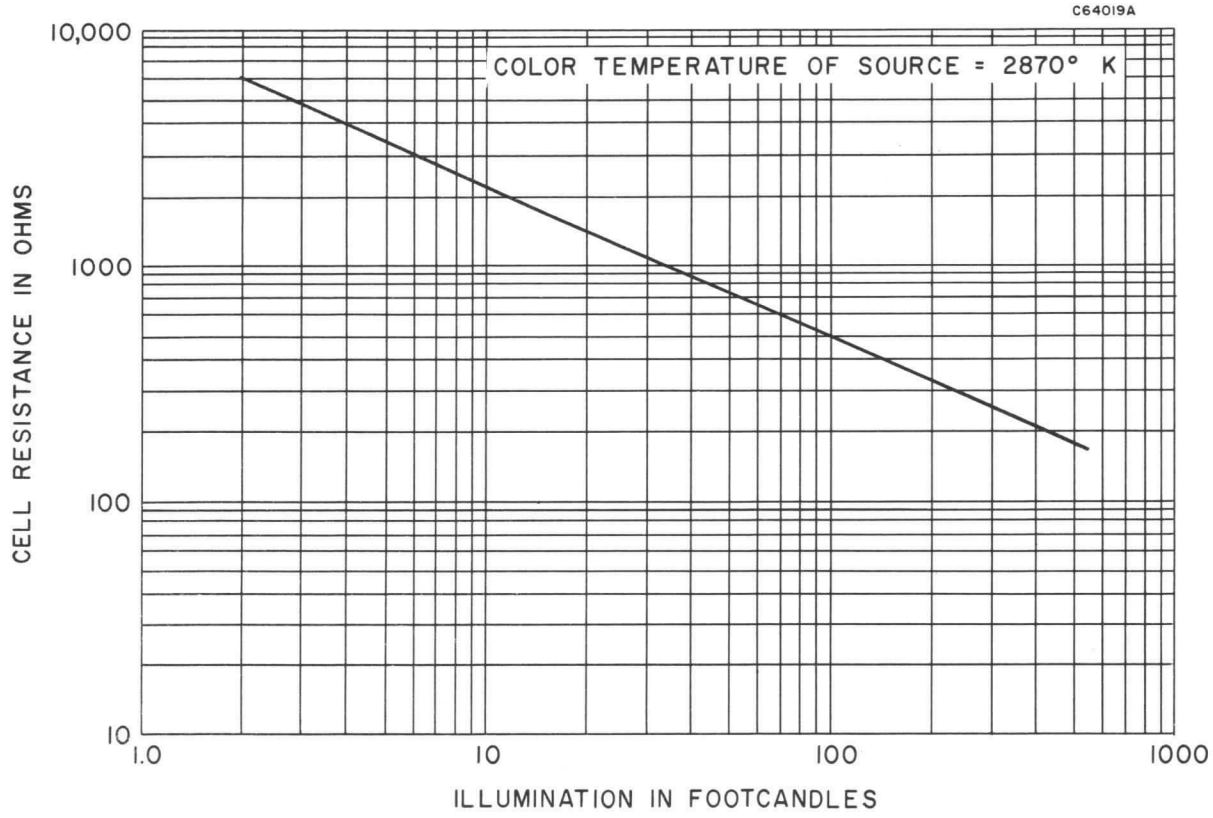

CELL CURRENT AND DISSIPATION VS VOLTAGE

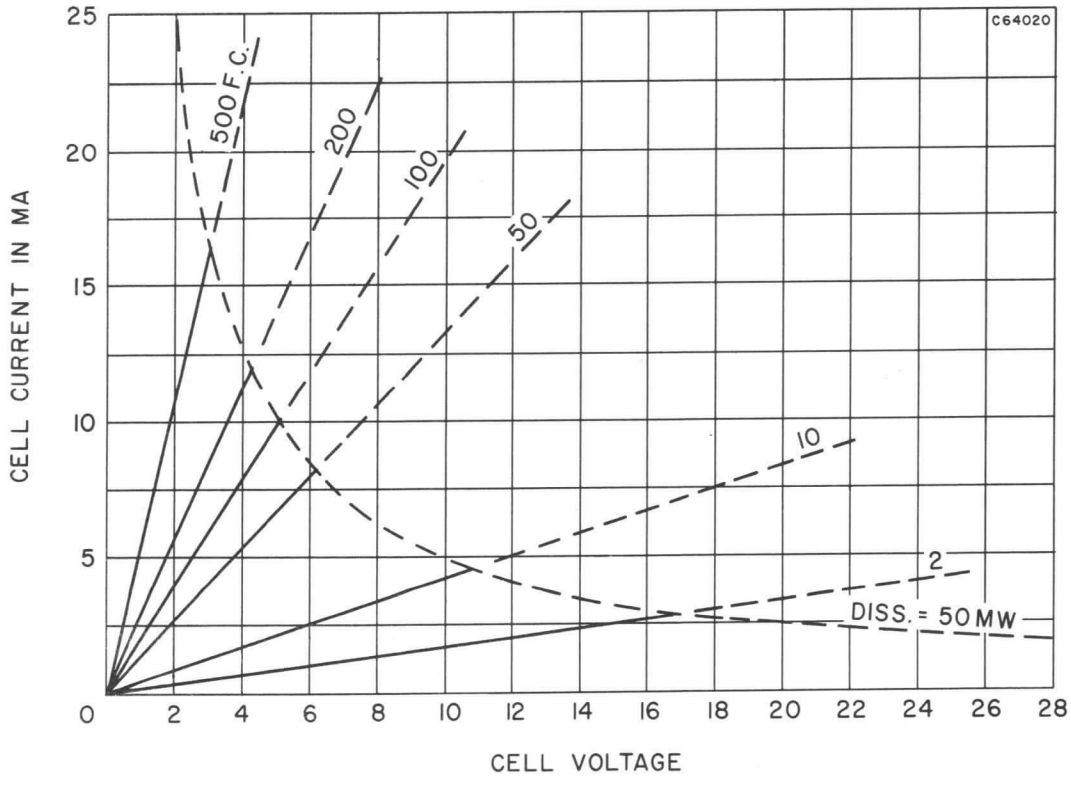

GENERAL DATA

Spectral Response	See Curve
Wavelength of Maximum Response	6100 ± 400 Angstroms
Sensitive Material	Cadmium-Sulfide
Sensitive Area	Viewed from End
Construction	Hermetically Sealed in Glass with Flexible Leads
Outline	See Drawing
Operating Position	Any

ELECTRICAL DATA

RATINGS (Absolute Maximum Values)

Breakdown Voltage[2]	300 Volts
Dissipation	
T-amb = 25°C	50 mW
T-amb = 70°C	5 mW
Ambient Temperature Range	−40 to +70 °C
Illumination	Note 3

CHARACTERISTICS

Cell Resistance[4]	
Illumination 2 FC	
Color Temperature 2870°K	12,000 Ohms
Dark Resistance[5]	1.2 Megohms Min.

NOTES:

1. *Minute increases in relative humidity will produce change in color.*
2. *Measured with cell in complete darkness at a pulse rate of 100 pps, 100 μ sec. duration. Voltage in excess of the rated value may damage the cell. Maximum DC or AC peak voltage is limited by maximum dissipation and minimum dark resistance rating.*
3. *Care should be exercised to prevent localized over-heating of the sensitive surface when the cell is used with a lens system.*
4. *Measured after 60 minutes minimum exposure to approximately 50 FC illumination (ambient room light).*
5. *Measured in complete darkness, 10 seconds after removal of 2 FC illumination.*

QUICK REFERENCE DATA

The Sylvania Type 8477 is a miniature cadmium-sulfide photoconductive cell featuring high sensitivity and hermetically sealed - in - glass construction. The cell is gaseous back-filled for a high dissipation safety factor and includes a blue-dot compound which turns pink[1] if the cell envelope becomes damaged. The 8477 is designed for use in a wide variety of industrial applications.

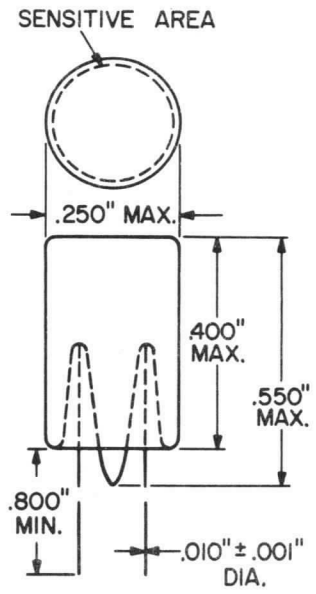

SYLVANIA ELECTRIC PRODUCTS INC.

Electronic Components Group
ELECTRONIC TUBE DIVISION
EMPORIUM, PA.

A Technical Publication
NOVEMBER, 1964

File Under
PHOTOCONDUCTORS

SPECTRAL RESPONSE

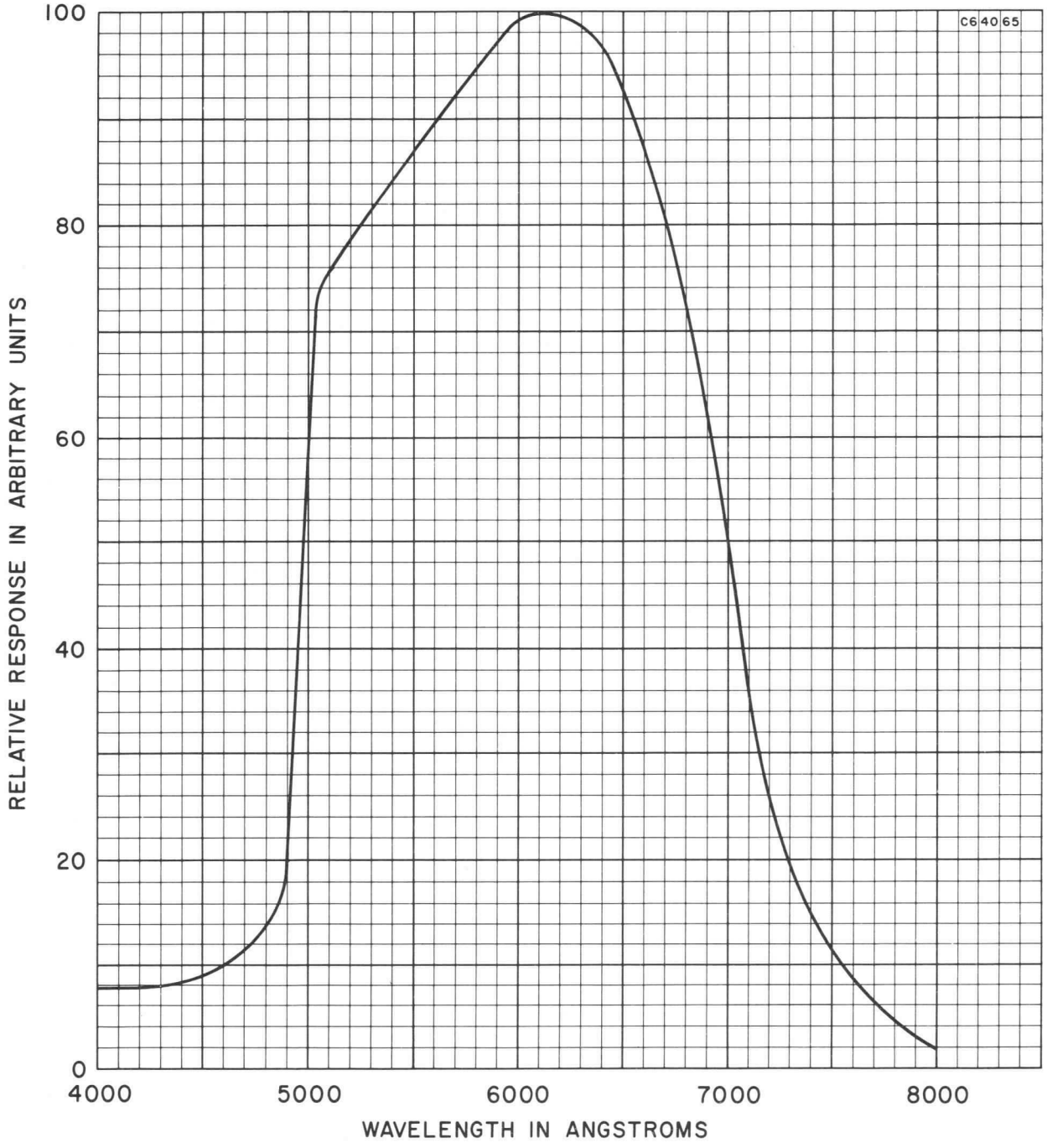

SPECTRAL CHARACTERISTIC OF HUMAN EYE, TUNGSTEN AND FLUORESCENT LAMPS

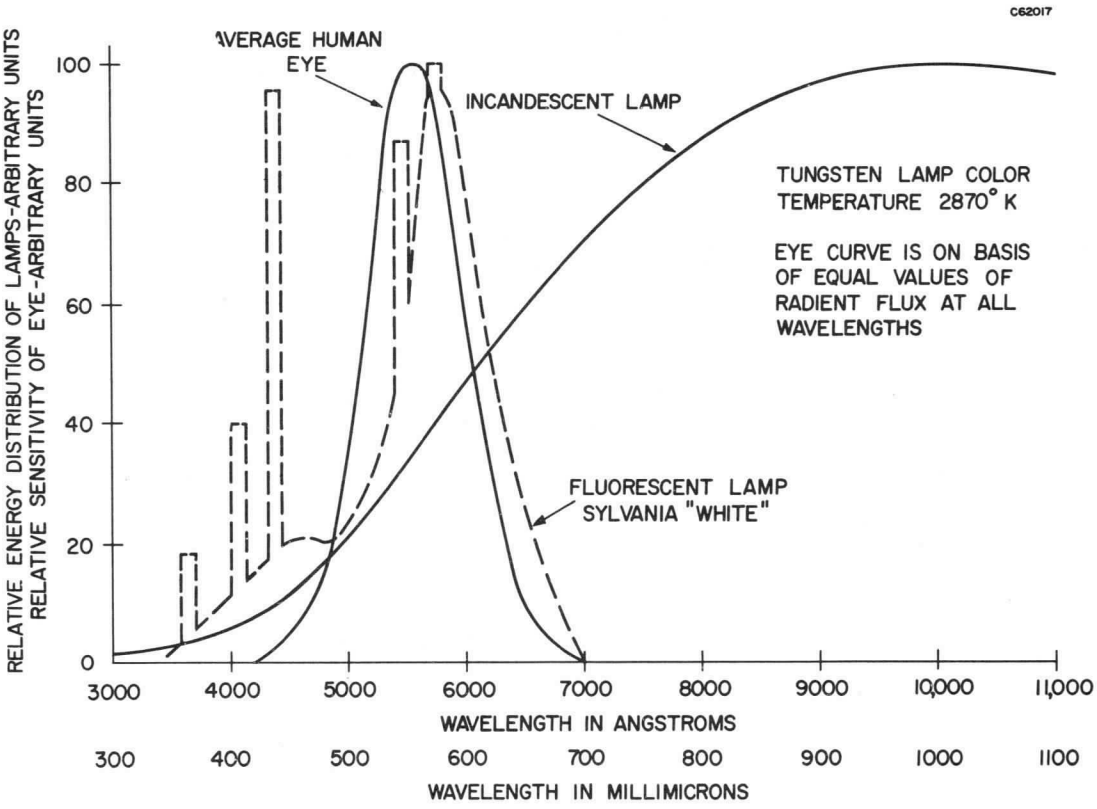

PERMISSIBLE DISSIPATION AS A FUNCTION OF AMBIENT TEMPERATURE

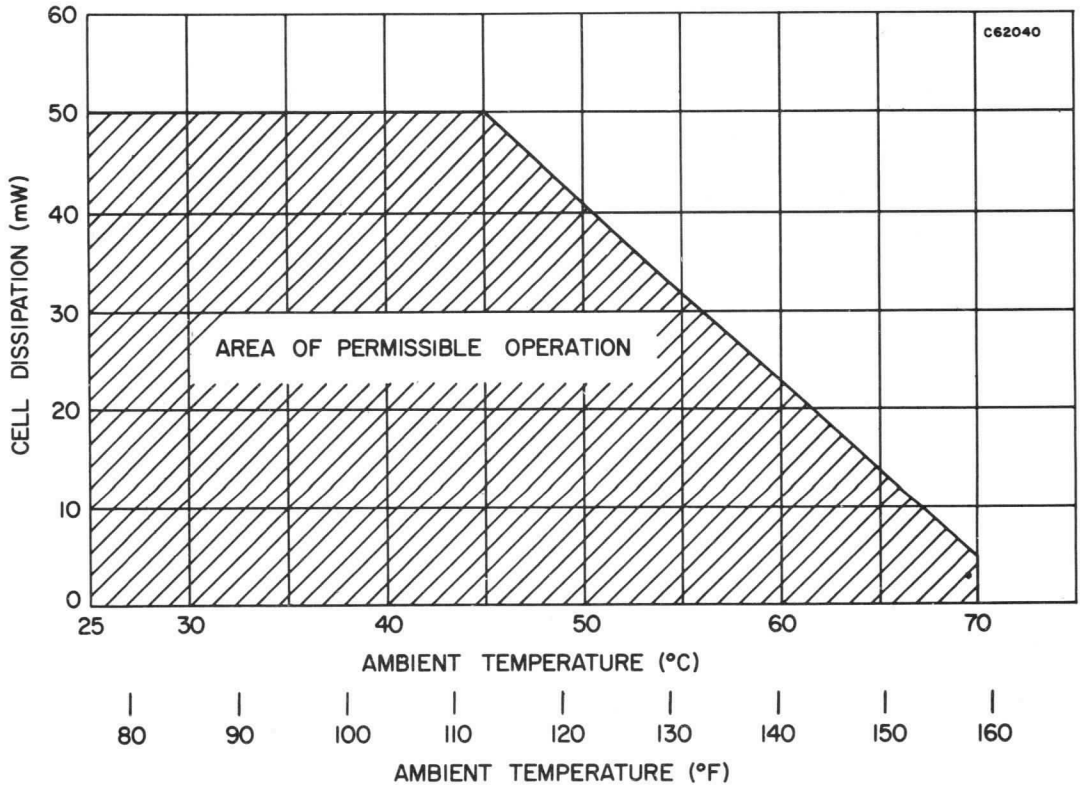

CELL RESISTANCE VS ILLUMINATION

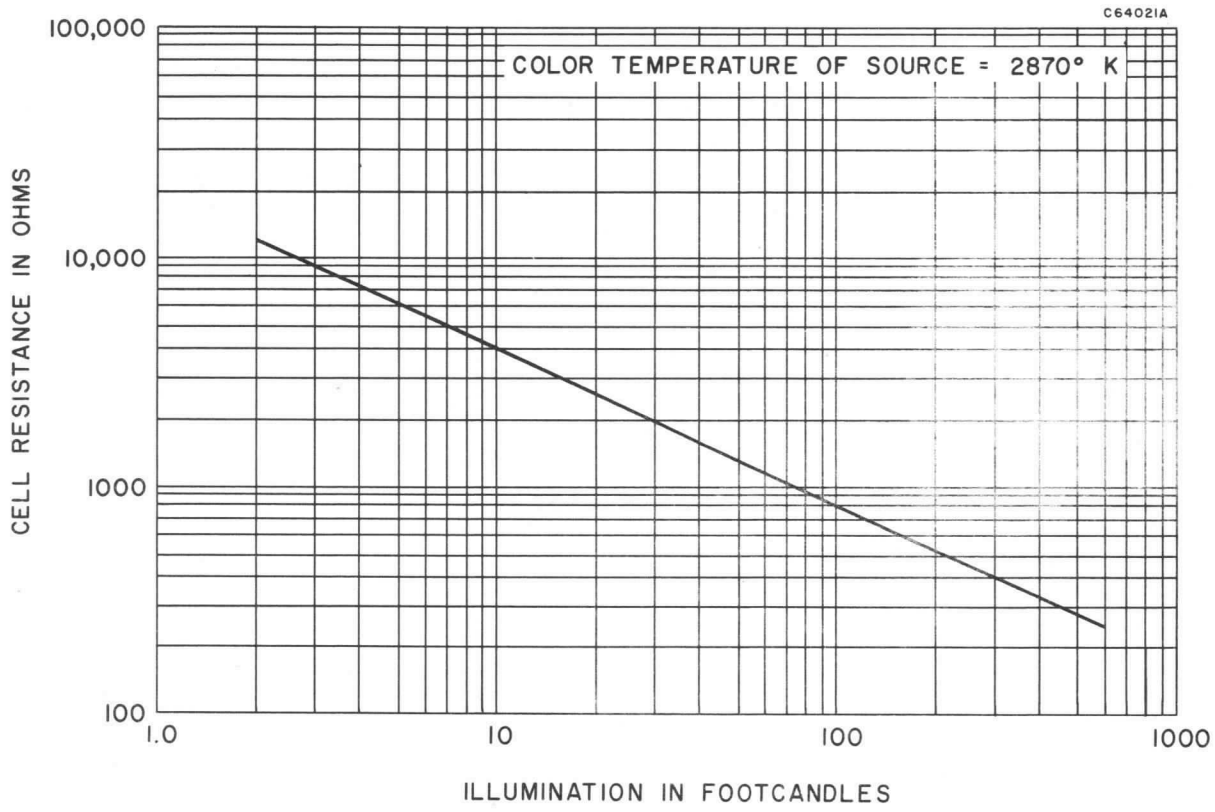

CELL CURRENT AND DISSIPATION VS VOLTAGE

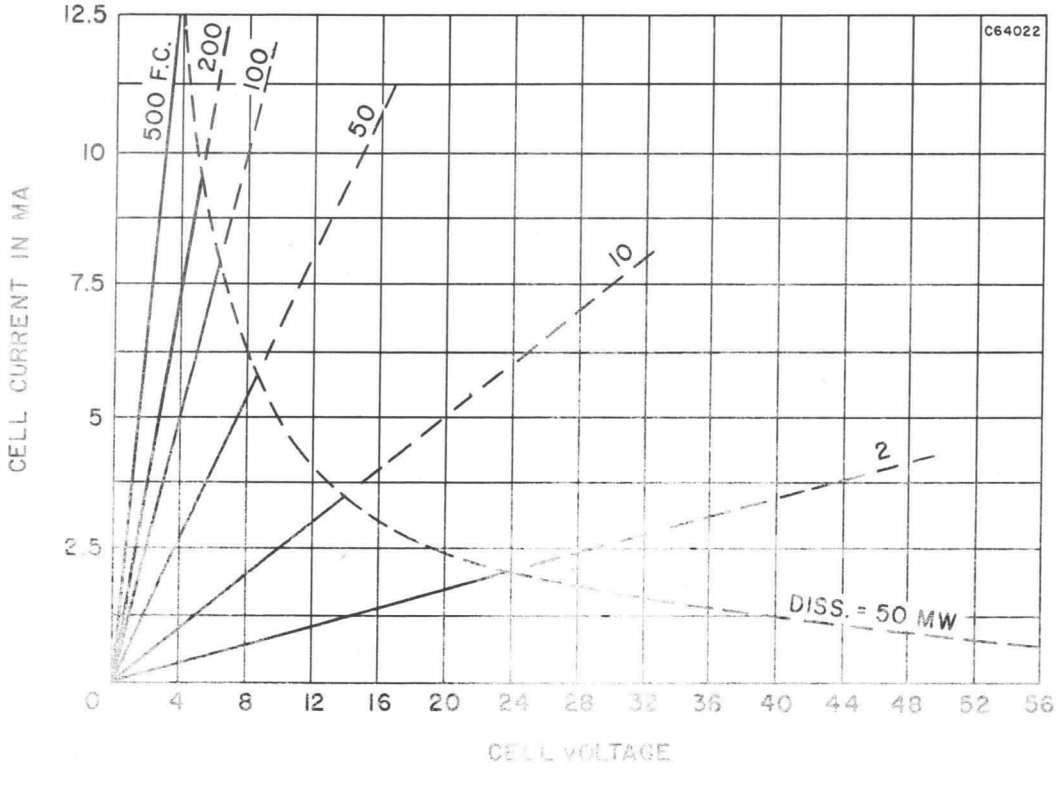

GENERAL DATA

Spectral Response	See Curve
Wavelength of Maximum Response	6100 ± 400 Angstroms
Sensitive Material	Cadmium-Sulfide
Sensitive Area	Viewed from End
Construction	Hermetically Sealed in Glass with Flexible Leads
Outline	See Drawing
Operating Position	Any

ELECTRICAL DATA

RATINGS (Absolute Maximum Values)

Breakdown Voltage[2]	300 Volts
Dissipation	
T-amb = 25°C	50 mW
T-amb = 70°C	5 mW
Ambient Temperature Range	−40 to +70 °C
Illumination	Note 3

CHARACTERISTICS

Cell Resistance[4]	
Illumination 2 FC	
Color Temperature 2870°K	24,000 Ohms
Dark Resistance[5]	2.4 Megohms Min.

NOTES:

1. *Minute increases in relative humidity will produce change in color.*
2. *Measured with cell in complete darkness at a pulse rate of 100 pps, 100 μ sec. duration. Voltage in excess of the rated value may damage the cell. Maximum DC or AC peak voltage is limited by maximum dissipation and minimum dark resistance rating.*
3. *Care should be exercised to prevent localized over-heating of the sensitive surface when the cell is used with a lens system.*
4. *Measured after 60 minutes minimum exposure to approximately 50 FC illumination (ambient room light).*
5. *Measured in complete darkness, 10 seconds after removal of 2 FC illumination.*

QUICK REFERENCE DATA

The Sylvania Type 8478 is a miniature cadmium-sulfide photoconductive cell featuring high sensitivity and hermetically sealed - in - glass construction. The cell is gaseous back-filled for a high dissipation safety factor and includes a blue-dot compound which turns pink[1] if the cell envelope becomes damaged. The 8478 is designed for use in a wide variety of industrial applications.

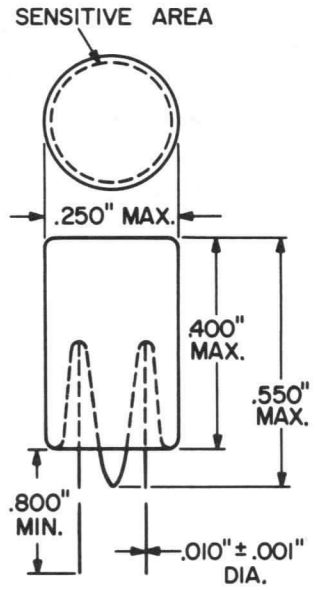

SYLVANIA ELECTRIC PRODUCTS INC.

Electronic Components Group
ELECTRONIC TUBE DIVISION
EMPORIUM, PA.

A Technical Publication
NOVEMBER, 1964

File Under
PHOTOCONDUCTORS

SPECTRAL RESPONSE

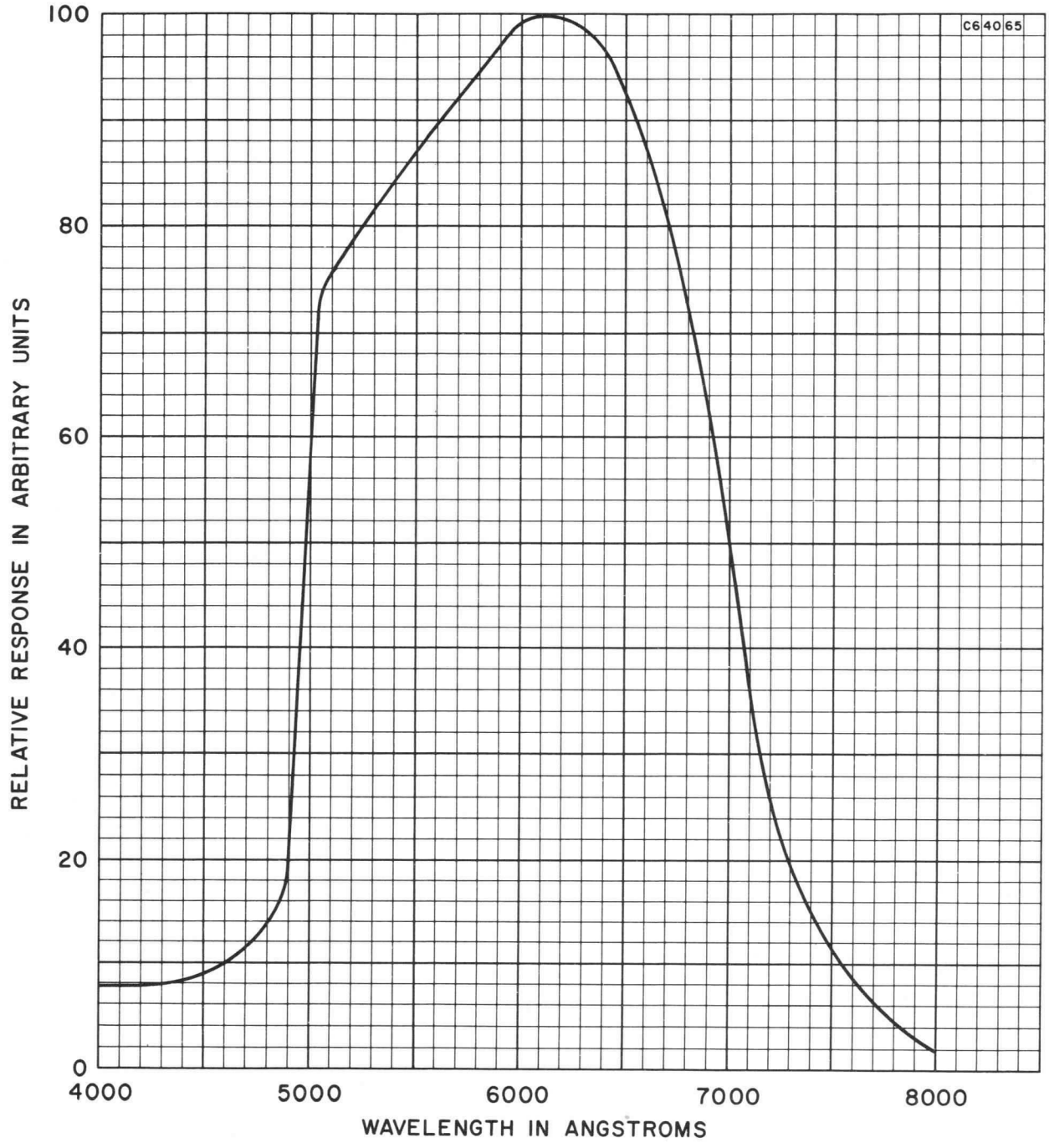

SPECTRAL CHARACTERISTIC OF HUMAN EYE, TUNGSTEN AND FLUORESCENT LAMPS

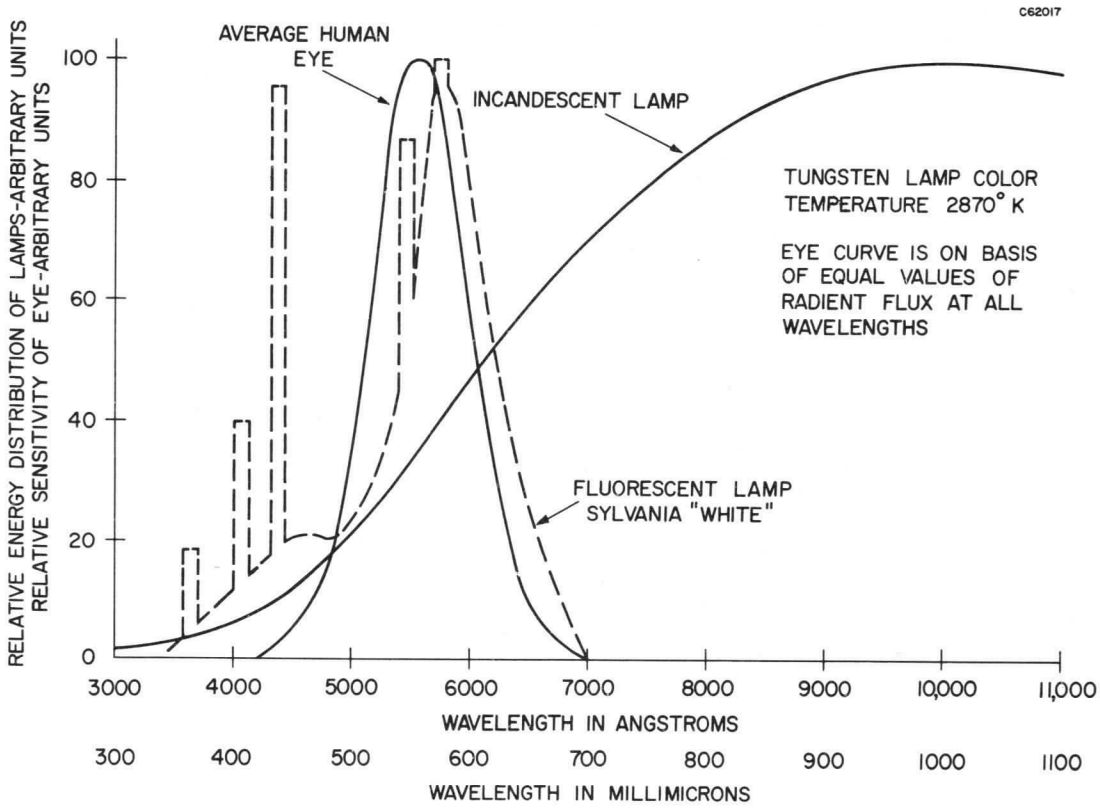

PERMISSIBLE DISSIPATION AS A FUNCTION OF AMBIENT TEMPERATURE

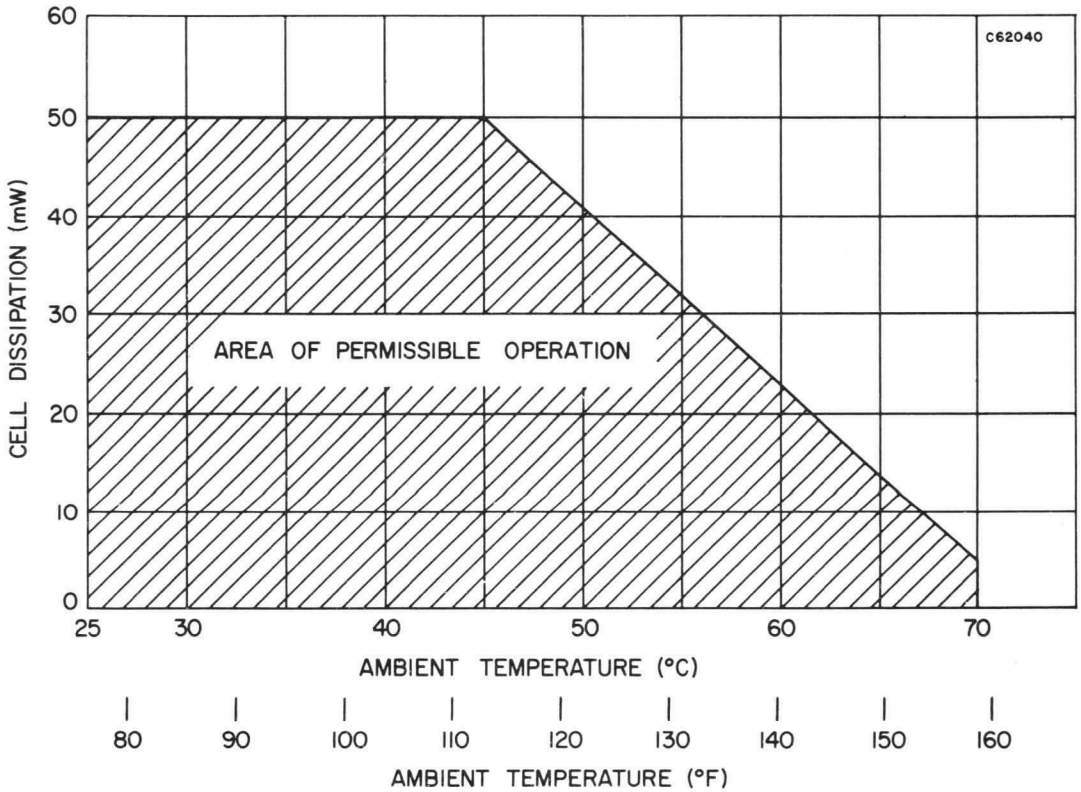

CELL RESISTANCE VS ILLUMINATION

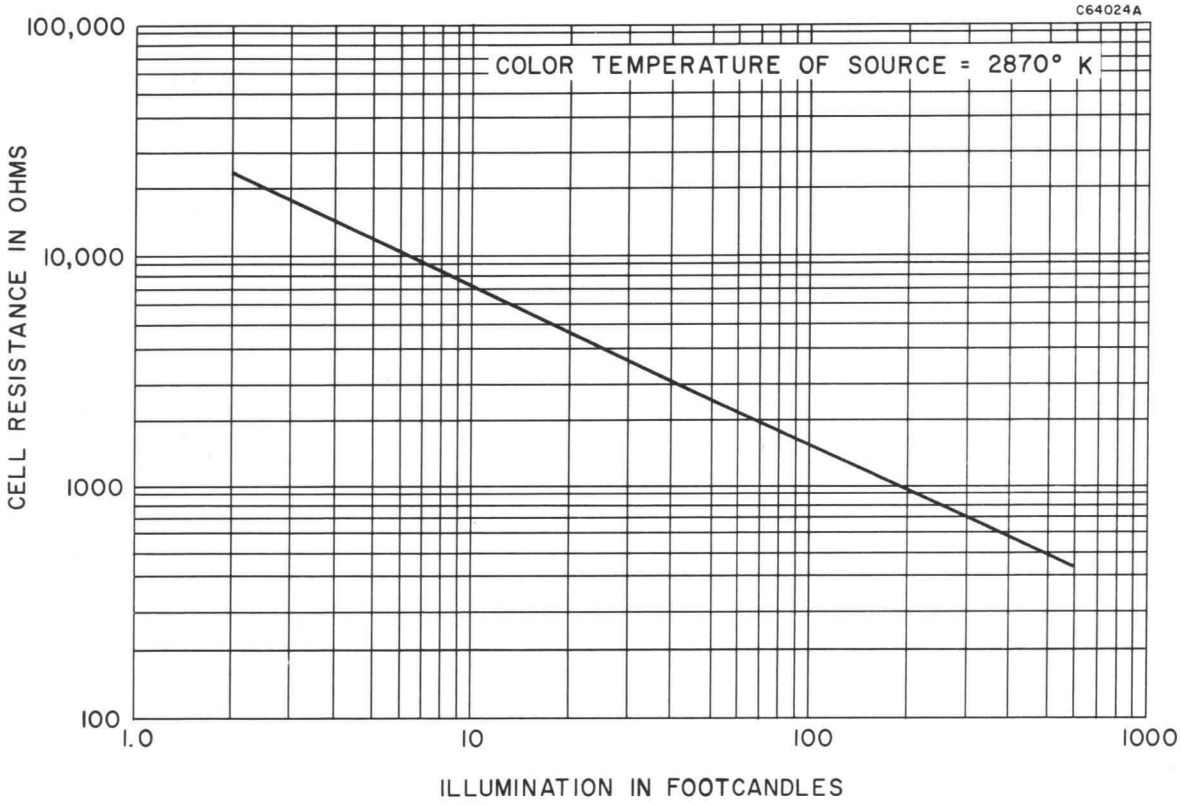

CELL CURRENT AND DISSIPATION VS VOLTAGE

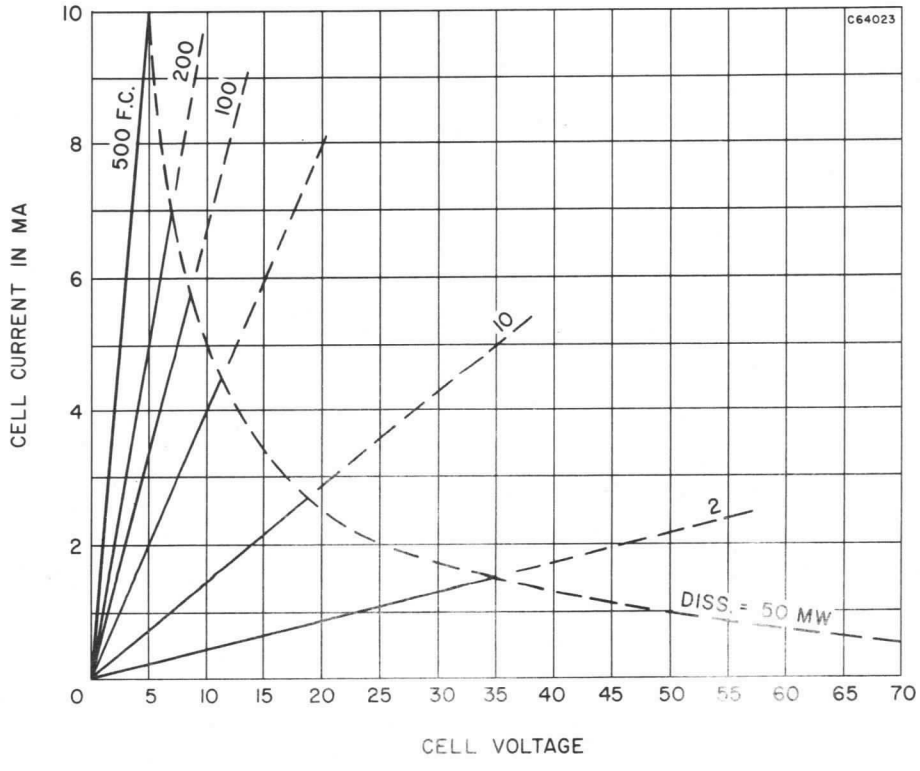

GENERAL DATA

Spectral Response	See Curve
Wavelength of Maximum Response	6100 ± 400 Angstroms
Sensitive Material	Cadmium-Sulfide
Sensitive Area	Viewed from End
Construction	Hermetically Sealed in Glass with Flexible Leads
Outline	See Drawing
Operating Position	Any

ELECTRICAL DATA

RATINGS (Absolute Maximum Values)

Breakdown Voltage[2]	300 Volts
Dissipation	
T-amb = 25°C	50 mW
T-amb = 70°C	5 mW
Ambient Temperature Range	−40 to +70 °C
Illumination	Note 3

CHARACTERISTICS

Cell Resistance[4]	
Illumination 2 FC	
Color Temperature 2870°K	100,000 Ohms
Dark Resistance[5]	10.0 Megohms Min.

NOTES:

1. *Minute increases in relative humidity will produce change in color.*
2. *Measured with cell in complete darkness at a pulse rate of 100 pps, 100 μ sec. duration. Voltage in excess of the rated value may damage the cell. Maximum DC or AC peak voltage is limited by maximum dissipation and minimum dark resistance rating.*
3. *Care should be exercised to prevent localized over-heating of the sensitive surface when the cell is used with a lens system.*
4. *Measured after 60 minutes minimum exposure to approximately 50 FC illumination (ambient room light).*
5. *Measured in complete darkness, 10 seconds after removal of 2 FC illumination.*

QUICK REFERENCE DATA

The Sylvania Type 8582 is a miniature cadmium-sulfide photoconductive cell featuring high sensitivity and hermetically sealed - in - glass construction. The cell is gaseous back-filled for a high dissipation safety factor and includes a blue-dot compound which turns pink[1] if the cell envelope becomes damaged. The 8582 is designed for use in a wide variety of industrial applications.

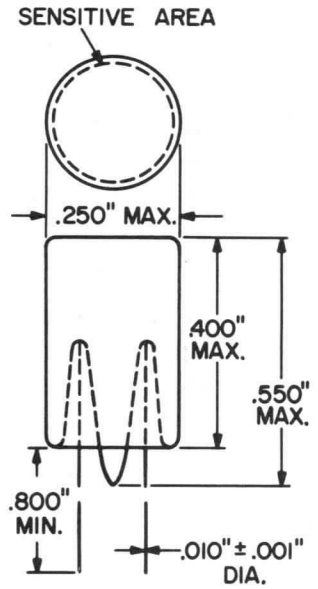

SYLVANIA ELECTRIC PRODUCTS INC.

Electronic Components Group
ELECTRONIC TUBE DIVISION
EMPORIUM, PA.

A Technical Publication
NOVEMBER, 1964

File Under
PHOTOCONDUCTORS

SPECTRAL RESPONSE

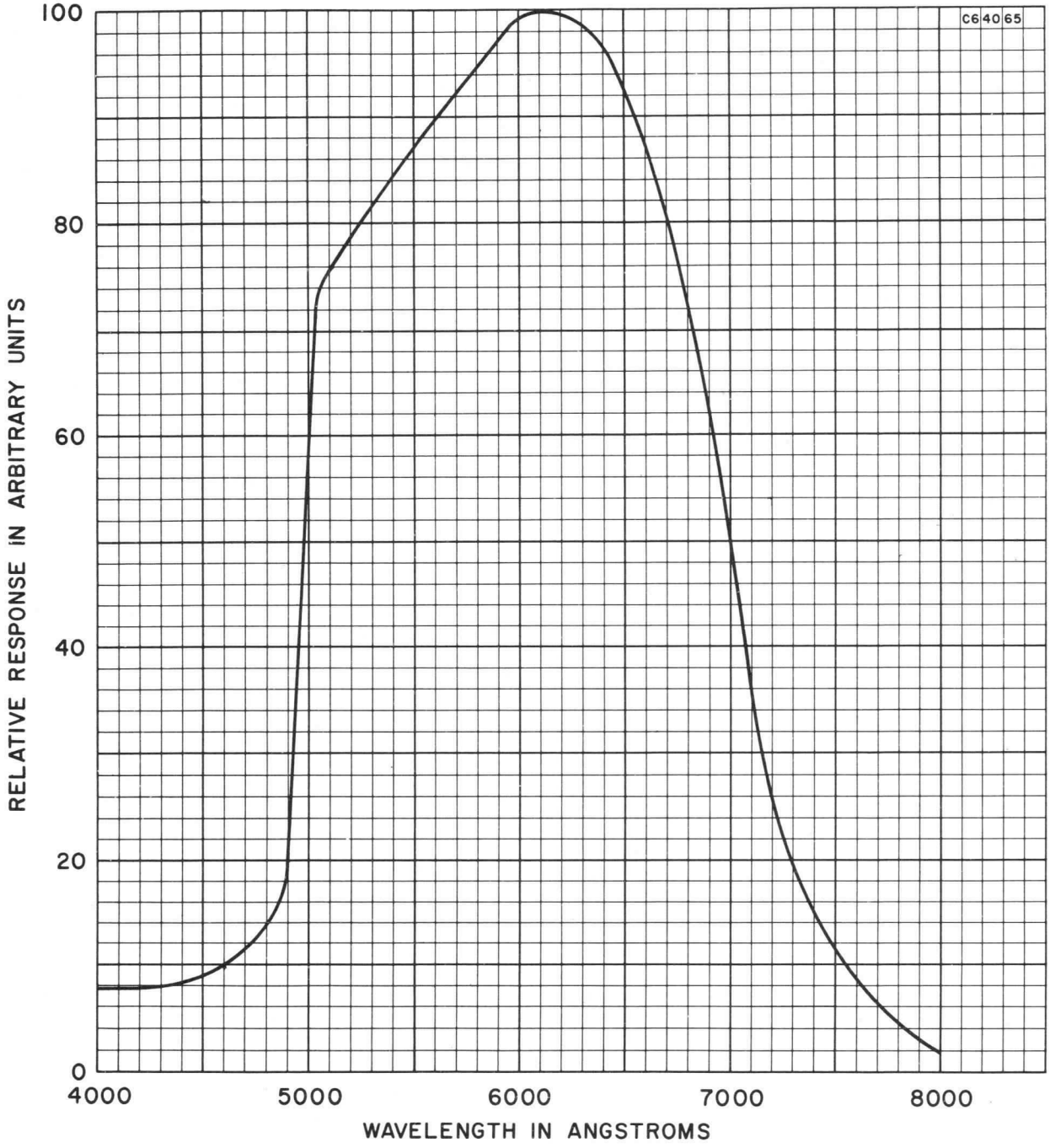

SPECTRAL CHARACTERISTIC OF HUMAN EYE, TUNGSTEN AND FLUORESCENT LAMPS

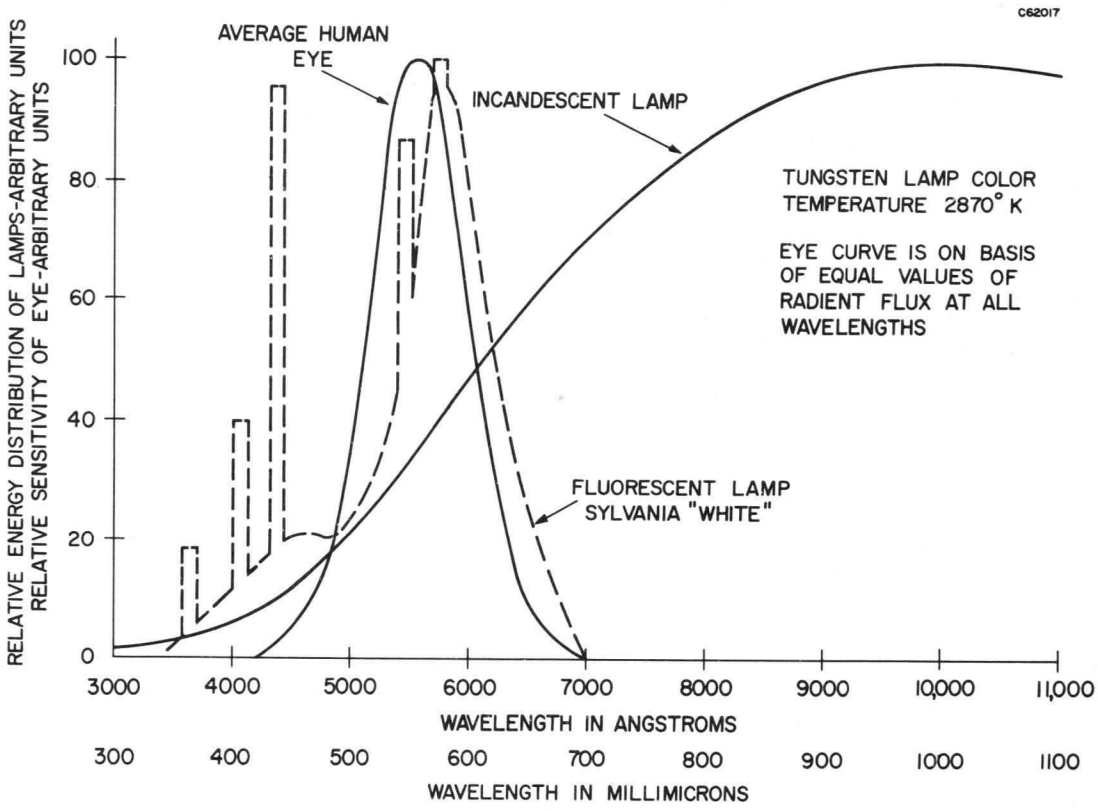

PERMISSIBLE DISSIPATION AS A FUNCTION OF AMBIENT TEMPERATURE

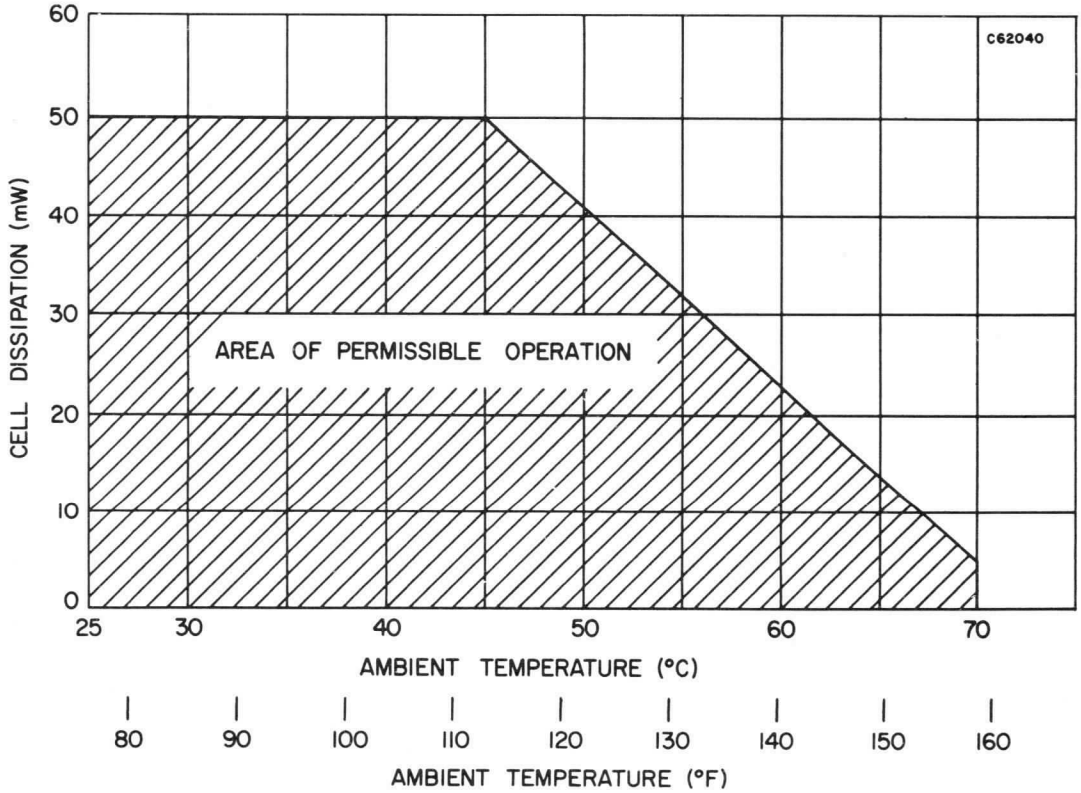

CELL RESISTANCE VS ILLUMINATION

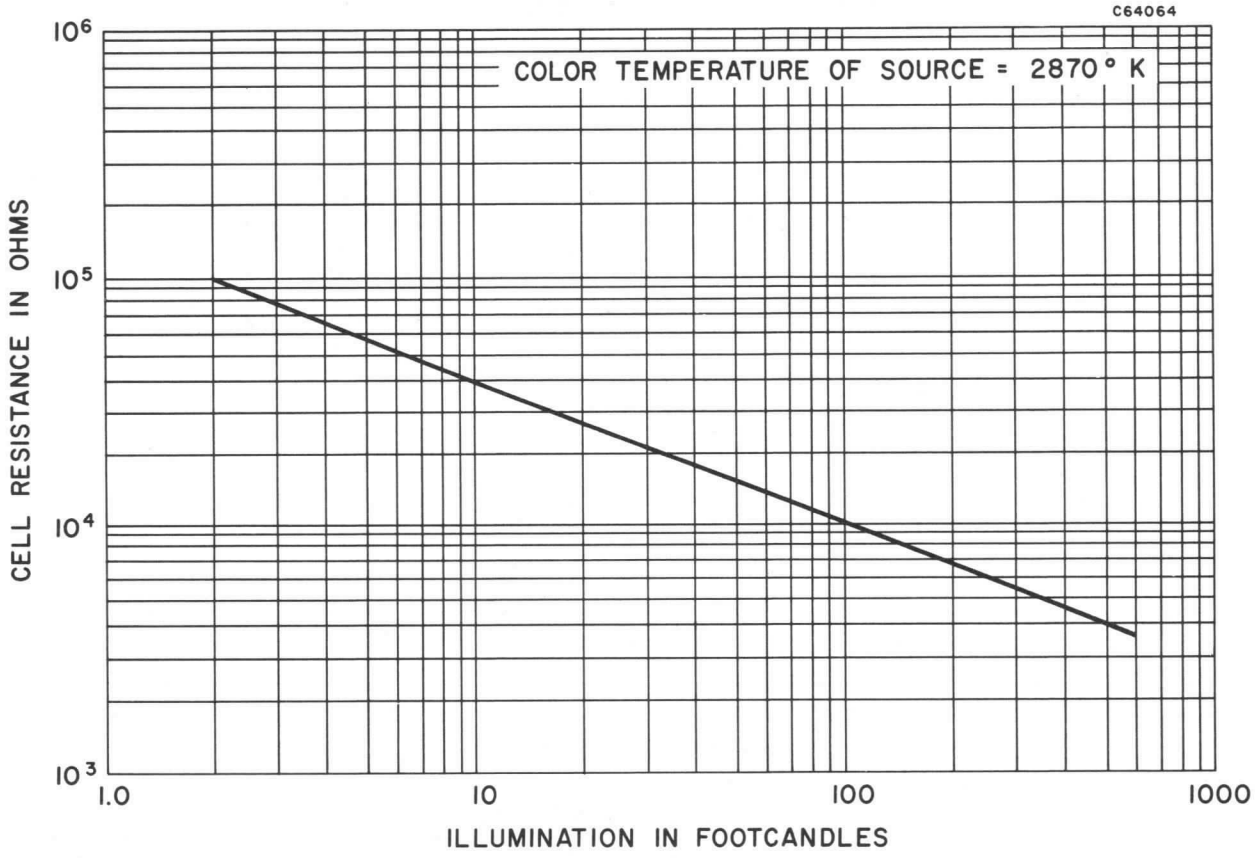

CELL CURRENT AND DISSIPATION VS VOLTAGE

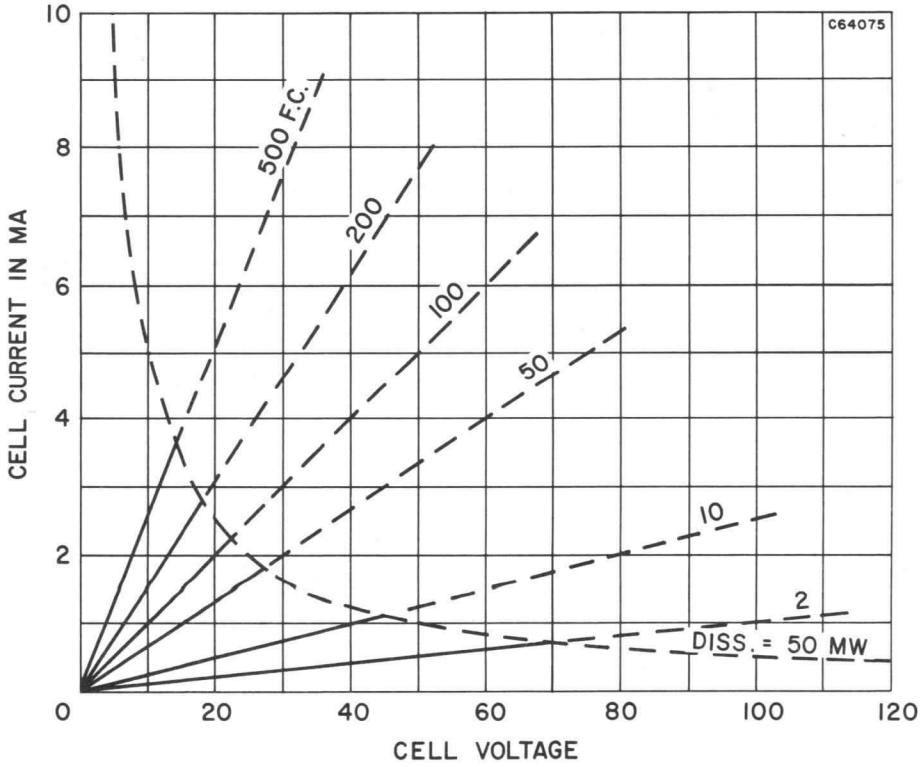

MECHANICAL DATA

Bulb	T-11
Base[1]	Modified Duodecal
Outline	See Drawing
Basing	See Drawing
Output Cathodes	No. 0 thru 9
Zero Position	No. 0 Cathode Aligned with Pin No. 12 ± 10°
Mounting Position	Any

ELECTRICAL DATA

INTERELECTRODE CAPACITANCES (Approx.)

Any Cathode to All Other Elements	4.2 pf
Guide No. 2 to All Other Elements	10 pf
Guide No. 1 to All Other Elements	11 pf

RATINGS (Absolute Values)

	Min.	Max.
Anode Supply Voltage[2]	350	800 Volts
Voltage Between Electrodes (Other than Anode)	—	200 Volts
Transfer Voltage	35	140 Volts
Anode Current	0.3	0.6 Ma
Input Frequency	0	4 Kpps
Ambient Temperature	−55	+60 °C

TYPICAL OPERATING CHARACTERISTICS

Anode Supply Voltage[2]	350 Volts	
Nominal Tube Drop	187 Volts	
Guide Bias	+35 Volts	Min.
Square Double Pulse Drive Amplitude (Each Pulse)[3]	−75 Volts	Min.
Square Double Pulse Width (Each Pulse)[3]	60 μSec.	Min.
Forced Reset Pulse Amplitude	−120 Volts	Min.
Forced Reset Pulse Width	50 μSec.	Min.
Cathode Load Resistor[4]	150 K-Ohms	Max.

NOTES:

1. *Sockets are available from Sylvania Electric Products Inc., 1035 Westminster, Williamsport, Pennsylvania. (Part No. 7460-0008)*
2. *A value for the anode resistor can be computed by subtracting the nominal tube drop from the supply voltage and dividing the remainder by the desired operating current.*
3. *Two separate pulses, back to back or with slight overlap, must be maintained.*
4. *The peak pulse output voltage can be determined by the IR drop across the chosen cathode resistor.*
5. *A counter tube brochure is available on request from Sylvania Electric Products Inc., 1100 Main Street, Buffalo 9, New York.*

QUICK REFERENCE DATA

The Type 6476A is a cold cathode, bidirectional decade counter tube with top viewed readout. It is designed to operate at inputs up to 4000 pulses per second. All 10 cathodes are brought out to individual base pins. Applications include computing, scaling, counting, frequency dividing, coding, modulating, matrixing, indexing, multiplexing, addition and subtraction. (See Note 5.)

SYLVANIA
ELECTRONIC TUBES
A Division of
Sylvania Electric Products Inc.
RECEIVING TUBE
OPERATIONS
EMPORIUM, PA.

Prepared and Released By The
TECHNICAL PUBLICATIONS SECTION
EMPORIUM, PENNSYLVANIA

DECEMBER, 1963

File Under
SPECIAL PURPOSE
ELECTRONIC TUBES

OUTLINE

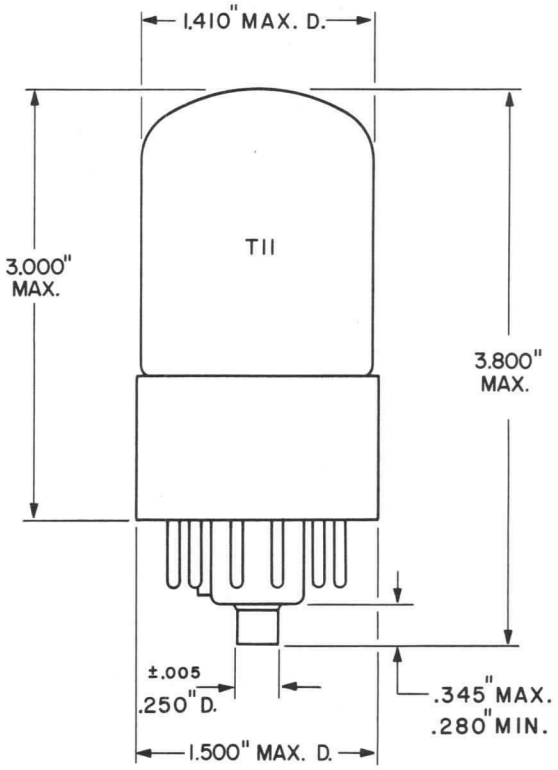

BASE CONNECTIONS

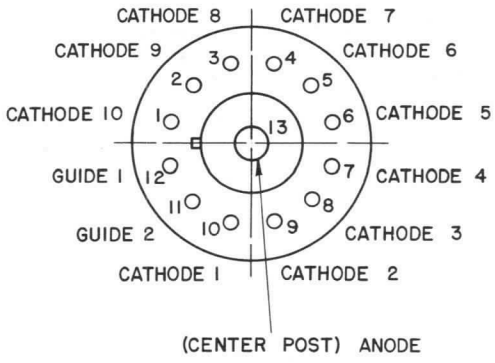

MECHANICAL DATA

Bulb	T-9
Base	Octal
Outline	See Drawing
Basing	See Drawing
Output Cathodes	No. 0, 5, 8, and 9
Zero Position	No. 0 Cathode Aligned with Pin No. 6 ± 10°
Mounting Position	Any

ELECTRICAL DATA

INTERELECTRODE CAPACITANCES (Approx.)

Any Cathode to All Other Elements	4.2 pf
Guide No. 2 to All Other Elements	10 pf
Guide No. 1 to All Other Elements	11 pf

RATINGS (Absolute Values)

	Min.	Max.
Anode Supply Voltage	350	800 Volts
Voltage Between Electrodes (Other than Anode)	—	140 Volts
Transfer Voltage	35	140 Volts
Anode Current	0.3	0.6 Ma
Input Frequency	0	4 Kpps
Ambient Temperature	−55	+60 °C

TYPICAL OPERATING CHARACTERISTICS

Anode Supply Voltage[1]	350 Volts	
Nominal Tube Drop	187 Volts	
Guide Bias	+35 Volts	Min.
Square Double Pulse Drive Amplitude (Each Pulse)[2]	−75 Volts	Min.
Square Double Pulse Width (Each Pulse)[2]	60 μSec.	Min.
Forced Reset Pulse Amplitude	−120 Volts	Min.
Forced Reset Pulse Width	50 μSec.	Min.
Cathode Load Resistor[3]	150 K-Ohms	Max.

NOTES:

1. *A value for the anode resistor can be computed by subtracting the nominal tube drop from the supply voltage and dividing the remainder by the desired operating current.*
2. *Two separate pulses, back to back or with slight overlap, must be maintained.*
3. *The peak pulse output voltage can be determined by the IR drop across the chosen cathode resistor.*
4. *A counter tube brochure is available on request from Sylvania Electric Products Inc., 1100 Main Street, Buffalo 9, New York.*

QUICK REFERENCE DATA

The Type 6802 is a cold cathode, bidirectional decade counter tube with top viewed readout. It is designed to operate at inputs up to 4000 pulses per second. Cathodes No. 0, 5, 8, and 9 are brought out to individual base pins. Applications include computing, scaling, counting, frequency dividing, coding modulating, matrixing, indexing, multiplexing, addition and subtraction. (See Note 4.)

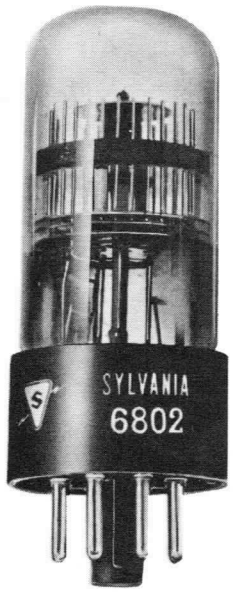

SYLVANIA
ELECTRONIC TUBES
A Division of
Sylvania Electric Products Inc.
RECEIVING TUBE
OPERATIONS
EMPORIUM, PA.

Prepared and Released By The
TECHNICAL PUBLICATIONS SECTION
EMPORIUM, PENNSYLVANIA

DECEMBER, 1963

File Under
SPECIAL PURPOSE
ELECTRONIC TUBES

OUTLINE

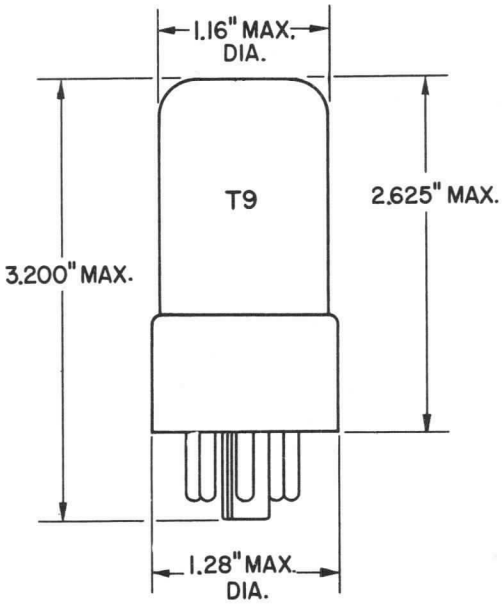

BASE CONNECTIONS

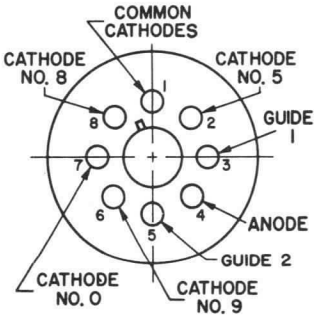

MECHANICAL DATA

Bulb	T-5 ½
Base	7 Pin Miniature
Outline	See Drawing
Basing	See Drawing
Output Cathodes	No. 0, 2, 8, and 9
Zero Position	No. 0 Cathode Aligned with Pin No. 5 ± 10°
Mounting Position	Any

ELECTRICAL DATA

INTERELECTRODE CAPACITANCES (Approx.)

Any Cathode to All Other Elements	2.4 pf
Guide No. 2 to All Other Elements	9.0 pf
Guide No. 1 to All Other Elements	8.3 pf

RATINGS (Absolute Values)

	Min.	Max.
Anode Supply Voltage[1]	350	800 Volts
Voltage Between Electrodes (Other than Anode)	—	140 Volts
Transfer Voltage	35	140 Volts
Anode Current	0.3	0.6 Ma
Input Frequency	0	5 Kpps
Ambient Temperature	−55	+60 °C

TYPICAL OPERATING CHARACTERISTICS

Anode Supply Voltage[1]	350 Volts	
Nominal Tube Drop	187 Volts	
Guide Bias	+35 Volts	Min.
Square Double Pulse Drive Amplitude (Each Pulse)[2]	−75 Volts	Min.
Square Double Pulse Width (Each Pulse)[2]	60 μSec.	Min.
Forced Reset Pulse Amplitude	−120 Volts	Min.
Forced Reset Pulse Width	50 μSec.	Min.
Cathode Load Resistor[3]	150 K-Ohms	Max.

NOTES:

1. *A value for the anode resistor can be computed by substracting the nominal tube drop from the supply voltage and dividing the remainder by the desired operating current.*
2. *Two separate pulses, back to back or with slight overlap, must be maintained.*
3. *The peak pulse output voltage can be determined by the IR drop across the chosen cathode resistor.*
4. *A counter tube brochure is available on request from Sylvania Electric Products Inc., 1100 Main Street, Buffalo 9, New York.*

QUICK REFERENCE DATA

The Type 6879 is a cold cathode, bidirectional decade counter tube with top viewed readout. It is designed to operate at inputs up to 5000 pulses per second. Cathodes No. 0, 2, 8, and 9 are brought out to individual base pins. Applications include computing, scaling, counting, frequency dividing, coding, modulating, matrixing, indexing, multiplexing, addition and subtraction. (See Note 4.)

SYLVANIA
ELECTRONIC TUBES
A Division of
Sylvania Electric Products Inc.
RECEIVING TUBE
OPERATIONS
EMPORIUM, PA.

Prepared and Released By The
TECHNICAL PUBLICATIONS SECTION
EMPORIUM, PENNSYLVANIA

DECEMBER, 1963

File Under
SPECIAL PURPOSE
ELECTRONIC TUBES

OUTLINE

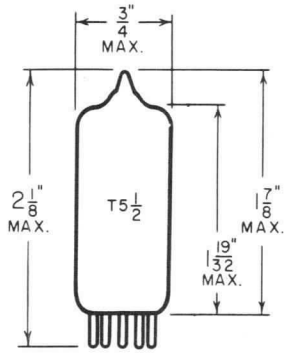

BASE CONNECTIONS

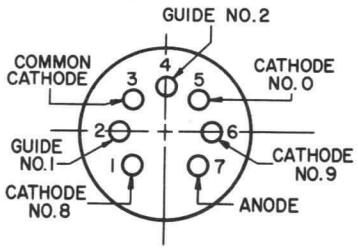

MECHANICAL DATA

Bulb	T-9
Base	Octal
Outline	See Drawing
Basing	See Drawing
Output Cathodes	No. 0, 5, 8, and 9
Zero Position	No. 0 Cathode Aligned with Pin No. 6 ± 10°
Mounting Position	Any

ELECTRICAL DATA

INTERELECTRODE CAPACITANCES (Approx.)

Any Cathode to All Other Elements	4.2 pf
Guide No. 2 to All Other Elements	10 pf
Guide No. 1 to All Other Elements	11 pf

RATINGS (Absolute Values)

	Min.	Max.
Anode Supply Voltage[1]	400	800 Volts
Voltage Between Electrodes (Other than Anode)	—	140 Volts
Transfer Voltage	35	140 Volts
Anode Current	0.6	0.8 Ma
Input Frequency	0	100 Kpps
Ambient Temperature	−55	+60 °C

TYPICAL OPERATING CHARACTERISTICS

Anode Supply Voltage[1]	400 Volts	
Nominal Tube Drop	235 Volts	
Guide Bias	+45 Volts	Min.
Square Double Pulse Drive Amplitude (Each Pulse)[2]	−85 Volts	Min.
Square Double Pulse Width (Each Pulse)[2]	4 μSec.	Min.
Forced Reset Pulse Amplitude	−120 Volts	Min.
Forced Reset Pulse Width	4 μSec.	Min.
Cathode Load Resistor[3]	50 K-Ohms	Max.

NOTES:

1. *A value for the anode resistor can be computed by subtracting the nominal tube drop from the supply voltage and dividing the remainder by the desired operating current.*
2. *Two separate pulses, back to back or with slight overlap, must be maintained.*
3. *The peak pulse output voltage can be determined by the IR drop across the chosen cathode resistor.*
4. *A counter tube brochure is available on request from Sylvania Electric Products Inc., 1100 Main Street, Buffalo 9, New York.*

QUICK REFERENCE DATA

The Type 6909 is a cold cathode, bidirectional decade counter tube with top viewed readout. It is designed to operate at inputs up to 100,000 pulses per second. Cathodes No. 0, 5, 8, and 9 are brought out to individual base pins. Applications include computing, scaling, counting, frequency dividing, coding, modulating, matrixing, indexing, multiplexing, addition and subtraction. (See Note 4.)

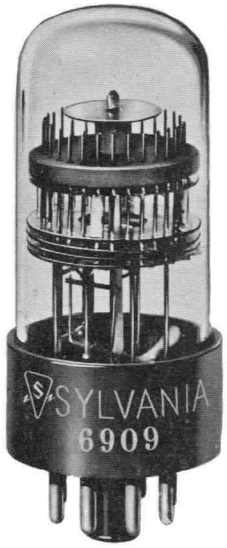

SYLVANIA
ELECTRONIC TUBES
A Division of
Sylvania Electric Products Inc.
RECEIVING TUBE
OPERATIONS
EMPORIUM, PA.
Prepared and Released By The
TECHNICAL PUBLICATIONS SECTION
EMPORIUM, PENNSYLVANIA
DECEMBER, 1963

File Under
SPECIAL PURPOSE
ELECTRONIC TUBES

OUTLINE

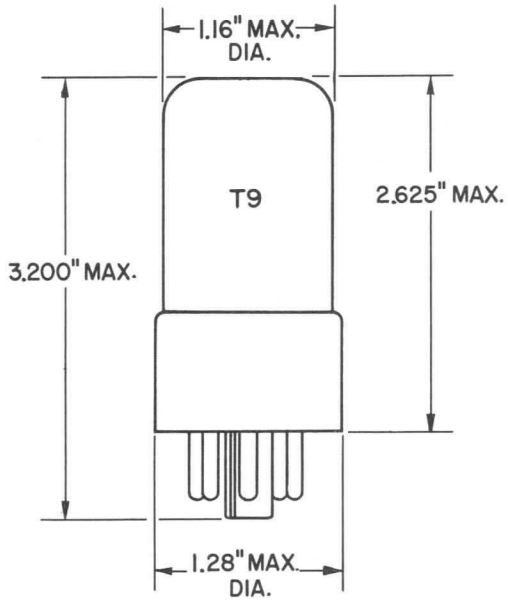

BASE CONNECTIONS

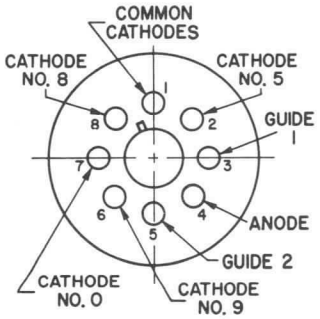

MECHANICAL DATA

Bulb	T-11
Base[1]	Modified Duodecal
Outline	See Drawing
Basing	See Drawing
Output Cathodes	No. 0 thru 9
Zero Position	No. 0 Cathode Aligned with Pin No. 12 ± 10°
Mounting Position	Any

ELECTRICAL DATA

INTERELECTRODE CAPACITANCES (Approx.)

Any Cathode to All Other Elements	4.2 pf
Guide No. 2 to All Other Elements	10 pf
Guide No. 1 to All Other Elements	11 pf

RATINGS (Absolute Values)

	Min.	Max.
Anode Supply Voltage[2]	400	800 Volts
Voltage Between Electrodes (Other than Anode)	—	140 Volts
Transfer Voltage	35	140 Volts
Anode Current	0.6	0.8 Ma
Input Frequency	0	100 Kpps
Ambient Temperature	−55	+60 °C

TYPICAL OPERATING CHARACTERISTICS

Anode Supply Voltage[2]	400 Volts	
Nominal Tube Drop	235 Volts	
Guide Bias	+45 Volts	Min.
Square Double Pulse Drive Amplitude (Each Pulse)[3]	−85 Volts	Min.
Square Double Pulse Width (Each Pulse)[3]	4 μSec.	Min.
Forced Reset Pulse Amplitude	−120 Volts	Min.
Forced Reset Pulse Width	4 μSec.	Min.
Cathode Load Resistor[4]	50 K-Ohms	Max.

NOTES:

1. *Sockets are available from Sylvania Electric Products Inc., 1035 Westminster, Williamsport, Pennsylvania. (Part No. 7460-0008)*
2. *A value for the anode resistor can be computed by subtracting the nominal tube drop from the supply voltage and dividing the remainder by the desired operating current.*
3. *Two separate pulses, back to back or with slight overlap, must be maintained.*
4. *The peak pulse output voltage can be determined by the IR drop across the chosen cathode resistor.*
5. *A counter tube brochure is available on request from Sylvania Electric Products Inc., 1100 Main Street, Buffalo 9, New York.*

QUICK REFERENCE DATA

The Type 6910 is a cold cathode, bidirectional decade counter tube with top viewed readout. It is designed to operate at inputs up to 100,000 pulses per second. All 10 cathodes are brought out to individual base pins. Applications include computing, scaling, counting, frequency dividing, coding, modulating, matrixing, indexing, multiplexing, addition and subtraction. (See Note 5.)

SYLVANIA
ELECTRONIC TUBES
A Division of
Sylvania Electric Products Inc.
RECEIVING TUBE
OPERATIONS
EMPORIUM, PA.

Prepared and Released By The
TECHNICAL PUBLICATIONS SECTION
EMPORIUM, PENNSYLVANIA

DECEMBER, 1963

File Under
SPECIAL PURPOSE
ELECTRONIC TUBES

OUTLINE

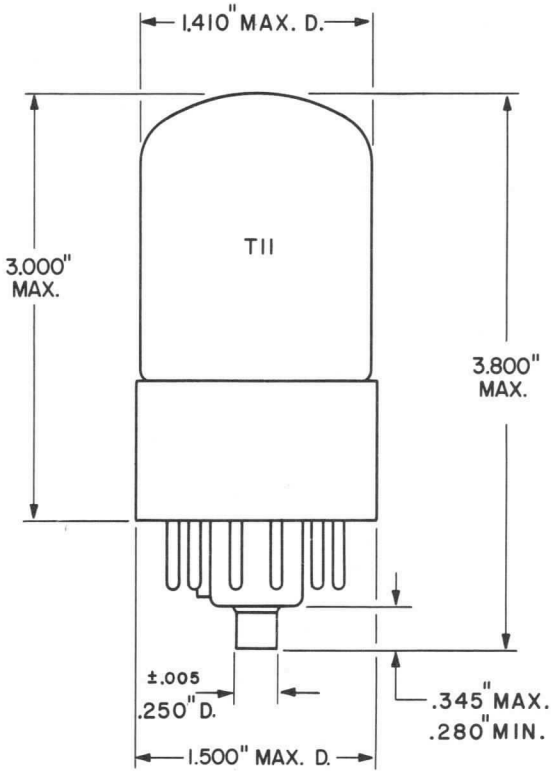

BASE CONNECTIONS

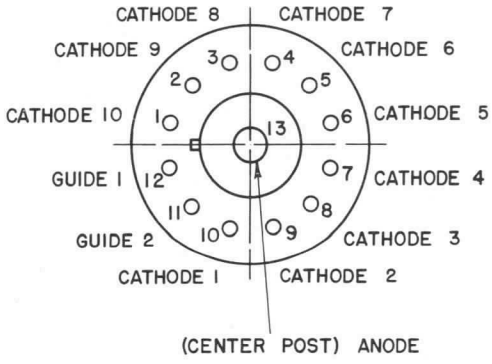

MECHANICAL DATA

Bulb	T-5 ½
Base	7 Pin Miniature
Outline	See Drawing
Basing	See Drawing
Output Cathodes	No. 0, 8, and 9
Zero Position	No. 0 Cathode Aligned with Pin No. 5 ± 10°
Mounting Position	Any

ELECTRICAL DATA

INTERELECTRODE CAPACITANCES (Approx.)

Any Cathode to All Other Elements	2.4 pf
Guide No. 2 to All Other Elements	9.0 pf
Guide No. 1 to All Other Elements	8.3 pf

RATINGS (Absolute Values)

	Min.	Max.
Anode Supply Voltage[1]	400	800 Volts
Voltage Between Electrodes (Other than Anode)	—	140 Volts
Transfer Voltage	35	140 Volts
Anode Current	0.6	0.8 Ma
Input Frequency	0	100 Kpps
Ambient Temperature	−55	+60 °C

TYPICAL OPERATING CHARACTERISTICS

Anode Supply Voltage[1]	400 Volts	
Nominal Tube Drop	235 Volts	
Guide Bias	+45 Volts	Min.
Square Double Pulse Drive Amplitude (Each Pulse)[2]	−85 Volts	Min.
Square Double Pulse Width (Each Pulse)[2]	4 μSec.	Min.
Forced Reset Pulse Amplitude	−120 Volts	Min.
Forced Reset Pulse Width	4 μSec.	Min.
Cathode Load Resistor[3]	50 K-Ohms	Max.

NOTES:

1. *A value for the anode resistor can be computed by subtracting the nominal tube drop from the supply voltage and dividing the remainder by the desired operating current.*
2. *Two separate pulses, back to back or with slight overlap, must be maintained.*
3. *The peak pulse output voltage can be determined by the IR drop across the chosen cathode resistor.*
4. *A counter tube brochure is available on request from Sylvania Electric Products Inc., 1100 Main Street, Buffalo 9, New York.*

QUICK REFERENCE DATA

The Type 7155 is a cold cathode, bidirectional decade counter tube with top viewed readout. It is designed to operate at inputs up to 100,000 pulses per second. Cathodes No. 0, 8, and 9 are brought out to individual base pins. Applications include computing, scaling, counting, frequency dividing, coding, modulating, matrixing, indexing, multiplexing, addition and subtraction. (See Note 4.)

SYLVANIA
ELECTRONIC TUBES
A Division of
Sylvania Electric Products Inc.
RECEIVING TUBE
OPERATIONS
EMPORIUM, PA.
Prepared and Released By The
TECHNICAL PUBLICATIONS SECTION
EMPORIUM, PENNSYLVANIA
DECEMBER, 1963

File Under
SPECIAL PURPOSE
ELECTRONIC TUBES

OUTLINE

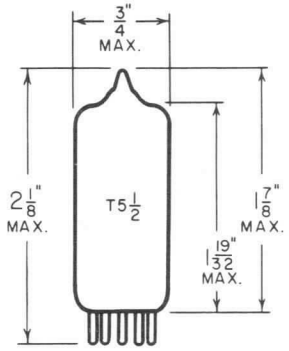

BASE CONNECTIONS

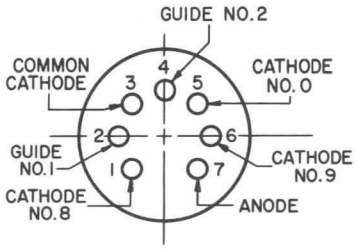

MECHANICAL DATA

Bulb	T-9
Base[1]	13 Pin
Outline	See Drawing
Basing	See Drawing
Output Cathodes	No. 0 thru 9
Zero Position	No. 0 Cathode Centered Between Pins 12 and 13 ± 10°
Mounting Position	Any

ELECTRICAL DATA

INTERELECTRODE CAPACITANCES (Approx.)

Any Cathode to All Other Elements	4.2 pf
Guide No. 2 to All Other Elements	10 pf
Guide No. 1 to All Other Elements	11 pf

RATINGS (Absolute Values)

	Min.	Max.
Anode Supply Voltage[2]	400	800 Volts
Voltage Between Electrodes (Other than Anode)	—	140 Volts
Transfer Voltage	35	140 Volts
Anode Current	0.65	0.8 Ma
Input Frequency	0	50 Kpps
Ambient Temperature	−55	+60°C

TYPICAL OPERATING CHARACTERISTICS

Anode Supply Voltage[2]	400 Volts	
Nominal Tube Drop	235 Volts	
Guide Bias	+35 Volts	Min.
Square Double Pulse Drive Amplitude (Each Pulse)[3]	−70 Volts	Min.
Square Double Pulse Width (Each Pulse)[3]	4 μSec.	Min.
Forced Reset Pulse Amplitude	−120 Volts	Min.
Forced Reset Pulse Width	4 μSec.	Min.
Cathode Load Resistor[4]	50 K-Ohms	Max.

NOTES:

1. *Sockets are available from Sylvania Electric Products Inc., 1035 Westminster, Williamsport, Pennsylvania. (Part No. 70-780-1)*
2. *A value for the anode resistor can be computed by subtracting the nominal tube drop from the supply voltage and dividing the remainder by the desired operating current.*
3. *Two separate pulses, back to back or with slight overlap, must be maintained.*
4. *The peak pulse output voltage can be determined by the IR drop across the chosen cathode resistor.*
5. *A counter tube brochure is available on request from Sylvania Electric Products Inc., 1100 Main Street, Buffalo 9, New York.*

QUICK REFERENCE DATA

The Type 8035 is a cold cathode, bidirectional decade counter tube with top viewed readout. It is designed to operate at inputs up to 50,000 pulses per second. All 10 cathodes are brought out to individual base pins. Applications include computing, scaling, counting, frequency dividing, coding, modulating, matrixing, indexing, multiplexing, addition and subtraction. (See Note 5.)

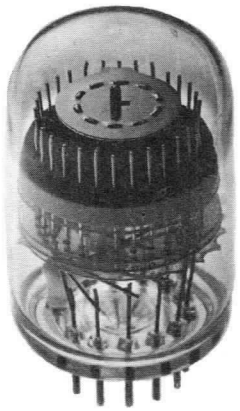

SYLVANIA
ELECTRONIC TUBES
A Division of
Sylvania Electric Products Inc.
RECEIVING TUBE
OPERATIONS
EMPORIUM, PA.

Prepared and Released By The
TECHNICAL PUBLICATIONS SECTION
EMPORIUM, PENNSYLVANIA

DECEMBER, 1963

File Under
SPECIAL PURPOSE
ELECTRONIC TUBES

OUTLINE

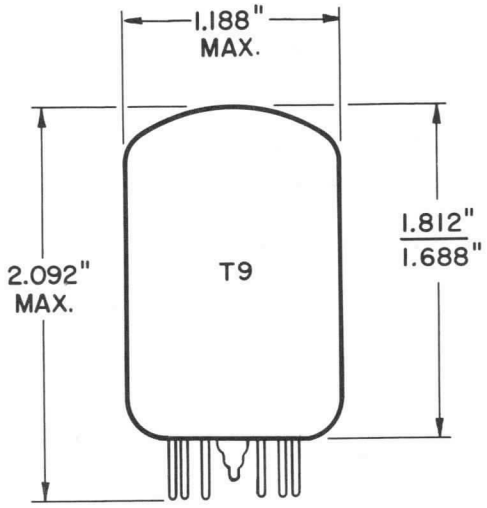

BASE CONNECTIONS

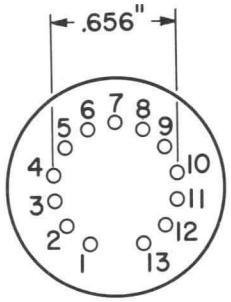

PIN NO.	1-K0	8-K3
	2-K9	9-K2
	3-K8	10-K1
	4-K7	11-G2
	5-K6	12-G1
	6-K5	13-Anode
	7-K4	

MECHANICAL DATA

Bulb	T-9
Base[1]	13 Pin
Outline	See Drawing
Basing	See Drawing
Output Cathodes	No. 0 thru 9
Zero Position	No. 0 Cathode Centered Between Pins 12 and 13 ± 10°
Mounting Position	Any

ELECTRICAL DATA

INTERELECTRODE CAPACITANCES (Approx.)

Any Cathode to All Other Elements	4.2 pf
Guide No. 2 to All Other Elements	10 pf
Guide No. 1 to All Other Elements	11 pf

RATINGS (Absolute Values)

	Min.	Max.	
Anode Supply Voltage[2]	350	800	Volts
Voltage Between Electrodes (Other than Anode)	—	140	Volts
Transfer Voltage	35	140	Volts
Anode Current	0.3	0.6	Ma
Input Frequency	0	4	Kpps
Ambient Temperature	−55	+60	°C

TYPICAL OPERATING CHARACTERISTICS

Anode Supply Voltage[2]	350 Volts	
Nominal Tube Drop	187 Volts	
Guide Bias	+35 Volts	Min.
Square Double Pulse Drive Amplitude (Each Pulse)[3]	−75 Volts	Min.
Square Double Pulse Width (Each Pulse)[3]	60 μSec.	Min.
Forced Reset Pulse Amplitude	−120 Volts	Min.
Forced Reset Pulse Width	50 μSec.	Min.
Cathode Load Resistor[4]	150 K-Ohms	Max.

NOTES:

1. *Sockets are available from Sylvania Electric Products Inc., 1035 Westminster, Williamsport, Pennsylvania. (Part No. 70-780-1)*
2. *A value for the anode resistor can be computed by subtracting the nominal tube drop from the supply voltage and dividing the remainder by the desired operating current.*
3. *Two separate pulses, back to back or with slight overlap, must be maintained.*
4. *The peak pulse output voltage can be determined by the IR drop across the chosen cathode resistor.*
5. *A counter tube brochure is available on request from Sylvania Electric Products Inc., 1100 Main Street, Buffalo 9, New York.*

QUICK REFERENCE DATA

The Type 8353 is a cold cathode, bidirectional decade counter tube with top viewed readout. It is designed to operate at inputs up to 4000 pulses per second. All 10 cathodes are brought out to individual base pins. Applications include computing, scaling, counting, frequency dividing, coding, modulating, matrixing, indexing, multiplexing, addition and subtraction. (See Note 5.)

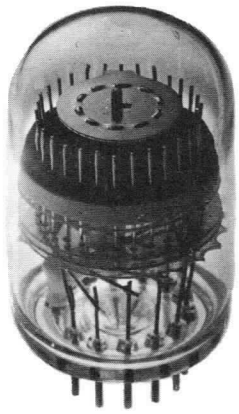

SYLVANIA
ELECTRONIC TUBES
A Division of
Sylvania Electric Products Inc.
RECEIVING TUBE
OPERATIONS
EMPORIUM, PA.

Prepared and Released By The
TECHNICAL PUBLICATIONS SECTION
EMPORIUM, PENNSYLVANIA

DECEMBER, 1963

File Under
SPECIAL PURPOSE
ELECTRONIC TUBES

OUTLINE

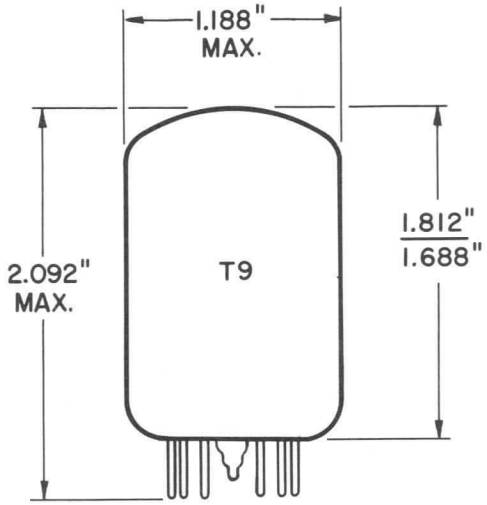

BASE CONNECTIONS

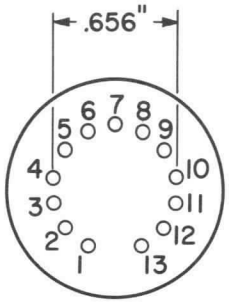

PIN NO.	1-K0	8-K3
	2-K9	9-K2
	3-K8	10-K1
	4-K7	11-G2
	5-K6	12-G1
	6-K5	13-Anode
	7-K4	

MECHANICAL DATA

Bulb	T-5 ½
Base	7 Pin Miniature
Pin Connections	See Drawing
Outline	See Drawing
Mounting Position	Any

ELECTRICAL DATA

ABSOLUTE RATINGS

	Min.	Max.
Hold-Off Voltage[1]	—	1500 Volts
Anode Voltage[3]	500	1000 Volts
Trigger Grid Firing Voltage[4]	180	— Volts
Trigger Grid Bias Voltage	—	90 Volts
Power Input[2]	—	1 Watt
Peak-Cathode Current	10	— Amps

TYPICAL OPERATION

Anode Voltage	750 Volts
Trigger Grid Bias	+90 Volts
Trigger Pulse Voltage	160 Volts
Discharge Condenser	0.25 μfd
Keep-Alive Current	50 μa
Frequency[2]	1 pps
Power Input[2]	0.07 Watt

NOTES:

1. *Hold-off voltage is defined as the greatest anode voltage at which the tube will not fire without the application of a triggering pulse to the trigger grid. It depends on the circuit design and the voltage-current conditions.*
2. *The maximum power input is given by $W = 1/2CV^2f$, where C is the discharge capacitance in microfarads, V is the anode voltage in kilovolts and f is the number of flashes or pulses per second. This relation also determines the maximum repetition rate.*
3. *Operation with anode voltages as low as 350 V. is possible, but will require considerably higher trigger pulse voltages.*
4. *The minimum trigger grid firing voltage is defined as the minimum instantaneous grid potential required to fire the tube. This potential is the sum of the steady bias voltage and trigger grid pulse voltage.*

QUICK REFERENCE DATA

The Sylvania Type OA5 is a ruggedized cold cathode trigger tube for electronic relay and switching service.

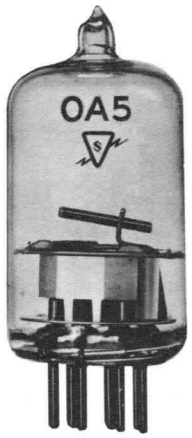

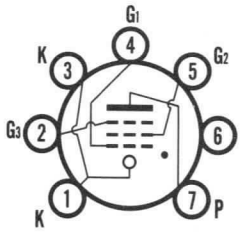

OA5

SYLVANIA
ELECTRONIC TUBES
A Division of
Sylvania Electric Products Inc.
RECEIVING TUBE
OPERATIONS
EMPORIUM, PA.

Prepared and Released By The
TECHNICAL PUBLICATIONS SECTION
EMPORIUM, PENNSYLVANIA

DECEMBER, 1963

File Under
SPECIAL PURPOSE
ELECTRONIC TUBES

APPLICATION DATA

The Sylvania Type OA5 trigger tube is an inert-gas-filled internally-triggered cold cathode trigger tube specifically designed for electronic relay and switching service involving extremely high instantaneous peak currents—of the order of hundreds of amperes—at low average current levels. The OA5 is constructed so that it will be fired by positive grid pulses. The special design of this tube results in several important features:

First, the use of a keep-alive grid among other techniques insures relatively stable triggering characteristics throughout life, a fact which will be of benefit in many varied types of equipment.

The time required to initiate the arc (delay time) has been reduced to a value of only a few microseconds. The de-ionization time has been decreased as well.

The trigger grid requirements have been reduced to a very low value (microamperes). Because of this fact, for example, it is possible, with high-intensity light flashes, to trigger the Sylvania OA5 directly from a phototube without intervening amplifiers. The tube directly bridges the gap between very low instantaneous current levels and very high instantaneous current levels.

This tube is rated at anode potentials up to the high level of 1000 volts.

The Sylvania Type OA5 measures only $1\frac{5}{8}''$ in overall height and $\frac{3}{4}''$ in diameter.

This tube has been designed specifically for trigger tube applications and is not intended for stroboscopic applications which utilize the light flashes produced by the arc. Among the applications for which this tube is particularly adapted is the triggering of flash tubes in electronic photoflash equipment. Firing may be readily controlled by a manual trip-switch, by built-in shutter synchronizing switches, or by a phototube. The use of a phototube in combination with the OA5 permits simultaneous control of any number of flash units without the use of interconnecting cables. Moreover, the extremely low trigger current requirements eliminate the possibility of shock and reduce the sparking of the switch contacts to a negligible degree. Another use of the Sylvania Type OA5 is in the triggering of such tubes as the 1D21 which are used for stroboscopic work. The OA5 is also used in depth recorder circuits. These are uses in which the OA5 triggers off other types of tubes which either handle higher output powers, or need more power to trigger them off than is available in the source of the triggering impulse, or both. These applications exemplify the versatility and usefulness of the trigger tube.

There are many additional applications for this miniature relay tube wherever precision firing, low firing delay time, low triggering current, and relatively high anode operating potentials are important.

TYPICAL CIRCUITS

Typical circuits are shown in Figures 1, 2, and 3. The circuit of Figure 1 utilizes an external source for providing the trigger pulse voltage. In Figures 2 and 3 both the trigger grid bias and pulse voltages are derived from a bleeder across the power supply.

Figure 2 is a representative circuit for firing an externally triggered electroflash tube from a shutter synchronizing switch. In Figure 3 a photocell provides the triggering pulse and permits synchronized control of a number of flash units.

It should be noted that the shield grid (G2, Pin No. 5) is left floating in all the circuits illustrated. The shield grid may be grounded to the cathode through a 10 megohm resistor to provide a considerable increase in hold-off voltage. However, this will also require that considerable higher trigger pulse voltages be provided, together with an appreciable increase in the grid pulse (or switch) current.

OUTLINE

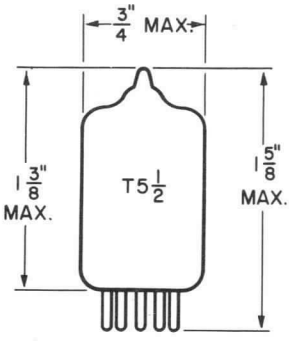

SUGGESTED CIRCUIT VALUES

R1 = 15 MEG
R2 = 5.1 MEG
R3 = 5.1 MEG
R4 = 270 K
R5 = 1 MEG
R6 = 500 TO 1000 OHMS
R7 = 1 TO 4 MEGS
R8 = .47 MEGS
R9 = .47 MEGS
C3 = FLASH TUBE COND.
C2 = .01 μf
C1 = .1 TO .25 μf

FIGURE 1—FIXED TRIGGER GRID BIAS

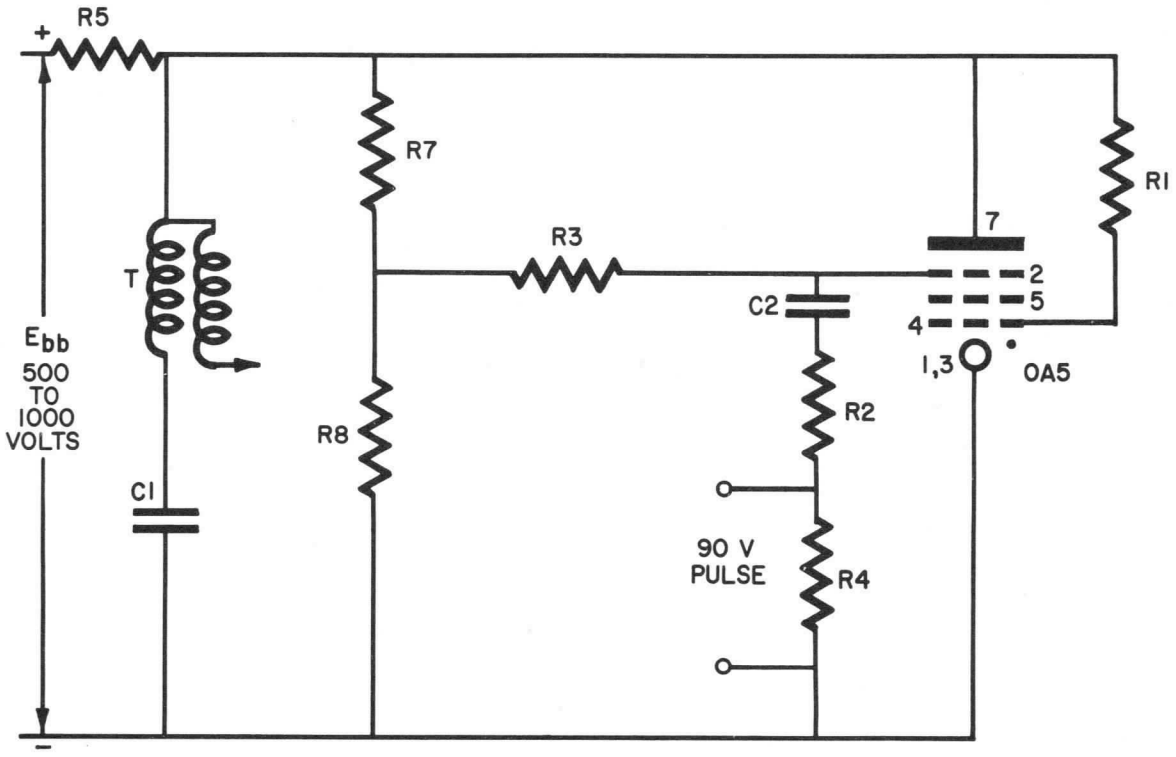

FIGURE 2—SYNCHRONOUS SWITCH TRIPPING CIRCUIT

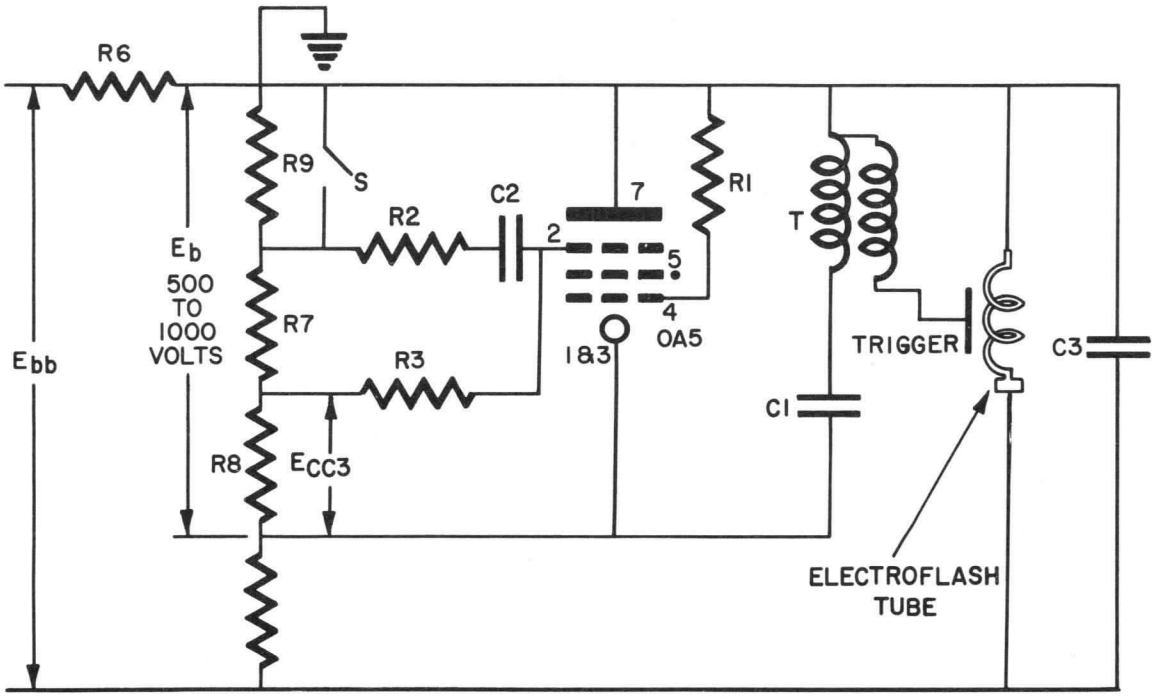

FIGURE 3—PHOTOTUBE TRIPPING CIRCUIT

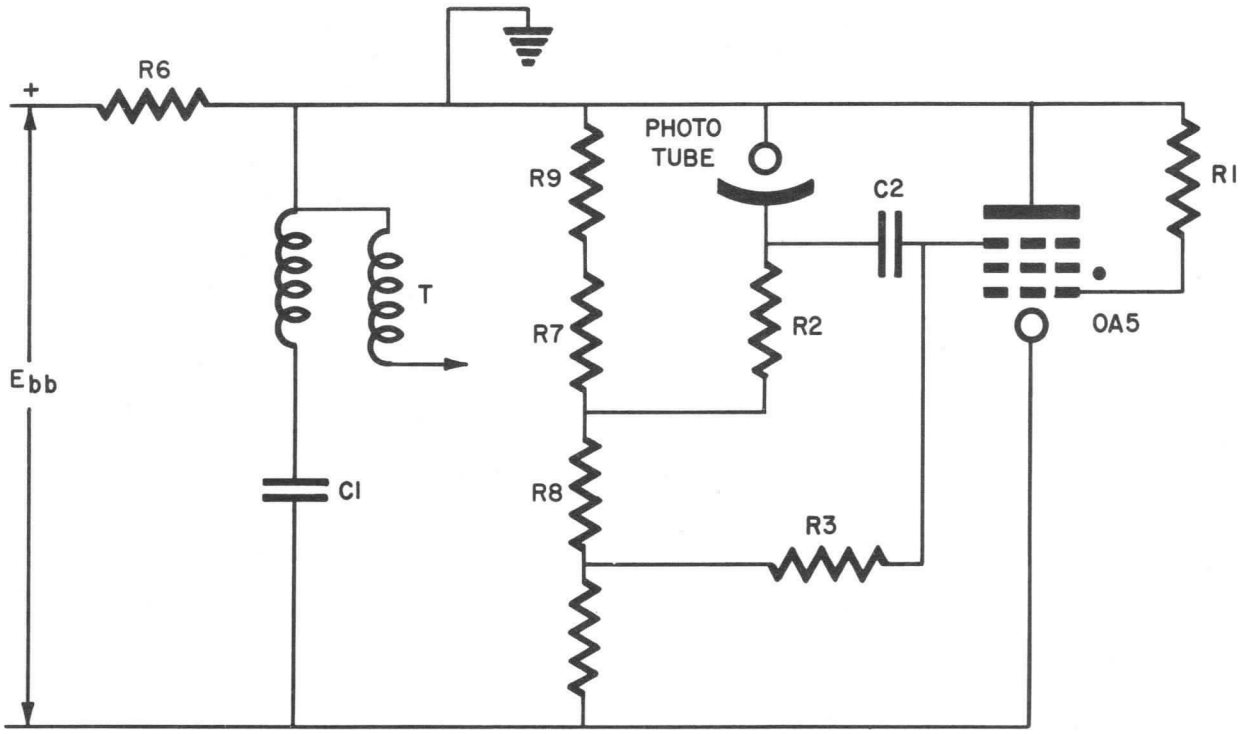

MECHANICAL DATA

Bulb	T-3
Base	Subminiature
Pin Connections	See Drawing
Outline	See Drawing
Mounting Position	Any

ELECTRICAL DATA

RATINGS (Absolute Maximum)

	Min.	Max.
Hold-Off Voltage[1]	—	500 Volts
Anode Voltage	350	500 Volts
Trigger Grid Firing Voltage	220	— Volts
Trigger Grid Bias Voltage	0	0 Volt
Power Input[2]	—	1 Watt
Peak-Cathode Current	10	— Amps

TYPICAL OPERATION

Anode Voltage	450 Volts dc
Trigger Grid Bias	0 Volt
Trigger Pulse Voltage	300 Volts
Discharge Condenser	0.25 μfd
Keep-Alive Current	45 μa
Frequency[2]	1 pps
Power Input[2]	0.025 Watt

NOTES:

1. *Hold-off voltage is defined as the greatest anode voltage at which the tube will not fire without the application of a triggering pulse to the trigger grid. It depends on the circuit design and the voltage-current conditions.*
2. *The maximum power input is given by $W = 1/2CV^2f$, where C is the discharge capacitance in microfarads, V is the anode voltage in kilovolts, and f is the number of flashes or pulses per second. This relation also determines the maximum repetition rate.*

APPLICATION DATA

The Sylvania Type 6483 has been designed to meet a long-standing need for a small, reliable and economical trigger tube.

Being of the cold cathode type, the 6483 requires no filament supply. Positive and uniform firing is assured through the use of a keep-alive grid which, in typical circuits, draws only about 45 microamperes. Delay time after application of the trigger pulse is but a few microseconds. (See Figure 3.)

Deionization time has been reduced to a point where the tube's usefulness is extended to several hundred cycles per second in proper circuits. The low design voltage of the 6483 trigger tube immediately suggests its operation from standard dry batteries now readily available for electronic photoflash equipment. As a trigger for the flash tube in the latter type of equipment, it provides foolproof zero delay ("X") synchronization on cameras so equipped or easily modified. The very high impedance of the switch circuit reduces the current through the contacts to a minimum. This insures long switch life and virtually eliminates the "surprise" effects of inadvertent physical contact with the switch terminals. Also, since the 6483 tube may be triggered directly from a type 929 or similar vacuum phototube, it makes possible remote operation of any number of slave flash units without interconnecting wires to the camera shutter switch.

The 6483 tube is extremely useful in the general field of relay and switching circuitry where size, reliability and power requirements are of importance.

QUICK REFERENCE DATA

The Sylvania Type 6483 is a ruggedized cold cathode trigger tube for electronic relay and switching service.

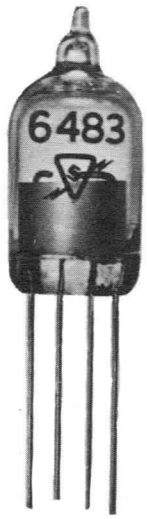

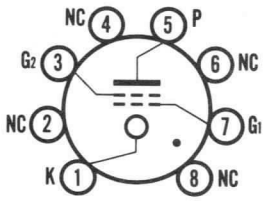

6483

SYLVANIA
ELECTRONIC TUBES
A Division of
Sylvania Electric Products Inc.
RECEIVING TUBE
OPERATIONS
EMPORIUM, PA.

Prepared and Released By The
TECHNICAL PUBLICATIONS SECTION
EMPORIUM, PENNSYLVANIA

DECEMBER, 1963

File Under
SPECIAL PURPOSE
ELECTRONIC TUBES

CIRCUIT OPERATION

The general circuits are shown (Figures 1 and 2) for typical operation of the Type 6483 trigger tube.

Figure 1 shows a basic circuit for operation as a trigger pulse source. The pulse is derived from TR1, an ignition coil of the variety available for photoflash equipment or small model gasoline engines, having a low impedance primary.

Figure 2 shows a slightly modified circuit particularly adapted to photoflash equipment. Means are shown for triggering by use of the camera shutter or photocell activated by a master electronic flash unit.

Circuit operation in Figure 2 is as follows:

Upon closing switch S by means of the camera shutter (or photocell), the trigger grid of the 6483 receives a positive voltage pulse approximately equal to the drop across R1 under steady state conditions.

R2 is used to limit the current through the switch as well as to isolate the switch from the voltage divider.

C1 is used to couple the trigger pulse to the trigger grid. In the steady state, C1 is charged to approximately the voltage appearing across R3.

R4 is the grid return resistor across which the effective trigger voltage is developed. It returns the trigger grid to cathode potential, thereby establishing a zero bias condition.

R8 is necessary to prevent the 6483 tube from shorting C3 during the firing interval.

R6 maintains a keep-alive current of proper value.

C2 is charged to essentially the supply voltage of the system. When the 6483 fires, C2 is discharged through the trigger tube and the primary of the ignition coil, causing an extremely high secondary voltage pulse of the type required to ionize the flash tube T2.

T2, when ionized, obtains its breakdown energy from condenser C3.

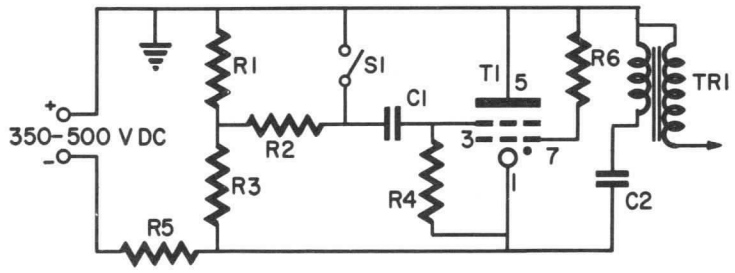

Figure 1

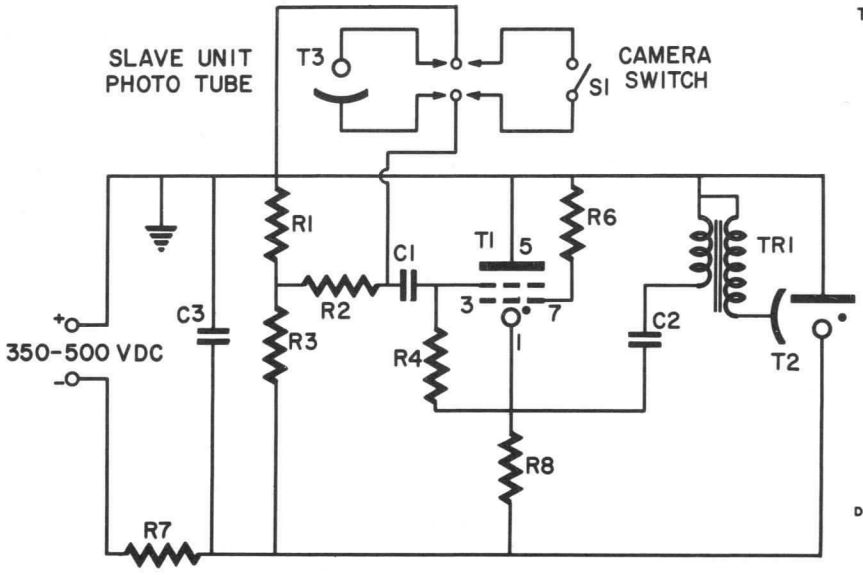

Figure 2

SUGGESTED CIRCUIT VALUES

C1 = 0.01 MFD, 600 V.
C2 = 0.1–0.25 MFD, 600 V.
C3 = SELECTED WITHIN T2 RATING
T1 = SYLVANIA 6483
T2 = 350–500 V. HIGH PRESSURE FLASH TUBE
T3 = SYLVANIA 929 PHOTOTUBE
TR1 = IGNITION COIL
S1 = SWITCH

R1 = 5.1 MEG., ½ WATT
R2 = 5.1 MEG., ½ WATT
R3 = 2.7 MEG., ½ WATT
R4 = 5.1 MEG., ½ WATT
R5 = 1.0 MEG., 2 WATTS
R6 = 10 MEG., ½ WATT
R7 = 500–1000 OHM, 10 WATTS
R8 = 0.1 MEG., 2 WATTS

D61023

TYPICAL TIME DELAY CHARACTERISTICS

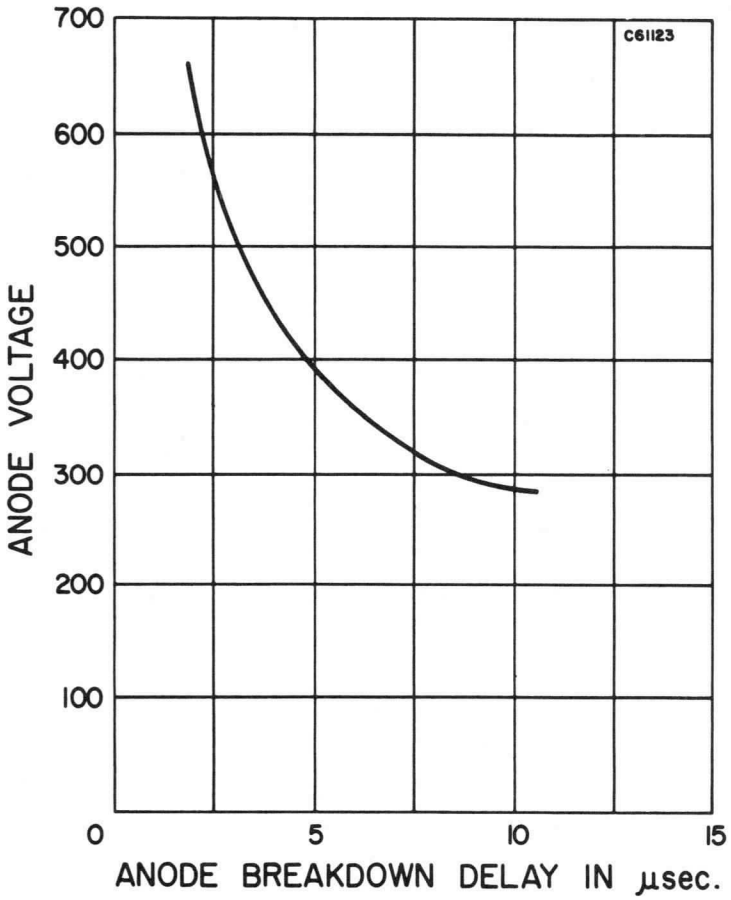

OUTLINE

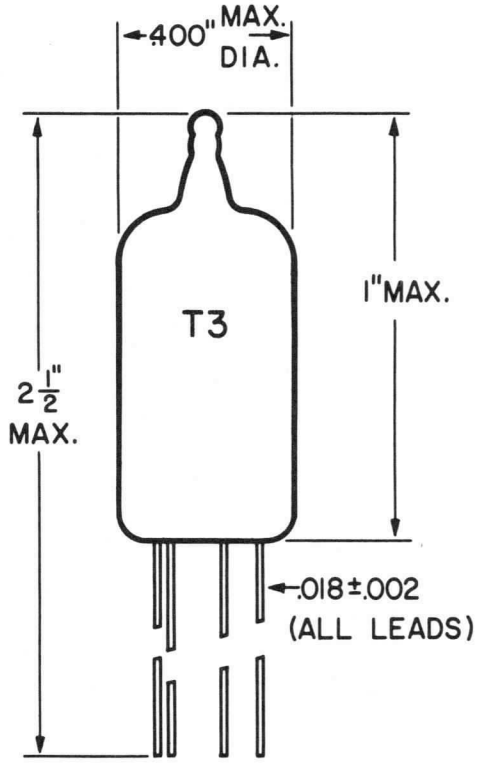

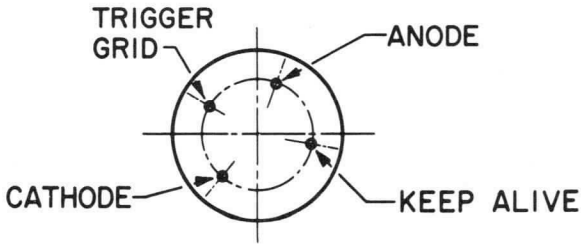

BOTTOM VIEW

MECHANICAL DATA

Mounting Position	Any
Envelope	Nonex Glass
Terminal Connections	Unpolarized
Bulb	See Outline Drawing

ELECTRICAL DATA

Resistance, Cold	6.6 ohms
Resistance, Hot (evacuated — 100 ma current)[1]	15.5-17.0 ohms
Operating Voltage	1.5 volts

NOTE

1. *Value of hot resistance (to the nearest hundredth of an ohm) shall be indicated directly opposite (180°) the identification marking.*

DESCRIPTION:

The SYLVANIA Pirani Tube, type R1111, provides a convenient means of measuring low gas pressures directly. When used in conjunction with suitable auxiliary equipment, rapid, continuous readings may be obtained.

The SYLVANIA Pirani Tube consists essentially of a tungsten filament having a high temperature coefficient of resistance. Since the thermal conductivity of a gas varies with pressure, the temperature of the filament will also vary. This results in a change in resistance and provides the basis of measurement. The tube must be calibrated for each different gas.

With proper care, readings may be obtained with a precision of ±5%. The useful pressure range is from one to one thousand microns. A common application is as a pressure gage and leak detector in evacuating apparatus. It is also extremely useful in automatic pressure control and recording equipment.

ADVANTAGES:

1. A Pirani Tube provides a better spread in the micron range than other devices, resulting in more accurate readings.
2. They are more sensitive as leak detectors.
3. There is no chance of tube failure due to exposure to atmosphere.
4. Pirani gauges are compact and simple to operate.

TYPICAL CIRCUIT:

For best performance, the R1111 should be used in matched pairs in a bridge circuit as shown below. The long narrow stem of one tube is cut at a convenient point and sealed directly into the system under test. The other tube provides compensation for variations in voltage and ambient temperature. Depending on the application and the accuracy of results desired, the compensator tube may be left intact, opened to the surrounding air, or filled with a particular gas to a standard pressure. The installation should be shielded from sources of radiant heat and from air currents. So that they will be equally affected by the ambient, the two tubes should be mounted as closely together as possible.

QUICK REFERENCE DATA

A hot filament Pirani tube used to measure vacuum pressures down to 1 micron.

SYLVANIA
ELECTRONIC TUBES
A Division of
Sylvania Electric Products Inc.
RECEIVING TUBE
OPERATIONS
EMPORIUM, PA.
Prepared and Released By The
TECHNICAL PUBLICATIONS SECTION
EMPORIUM, PENNSYLVANIA
DECEMBER, 1963

File Under
SPECIAL PURPOSE
ELECTRONIC TUBES

TYPICAL CIRCUIT

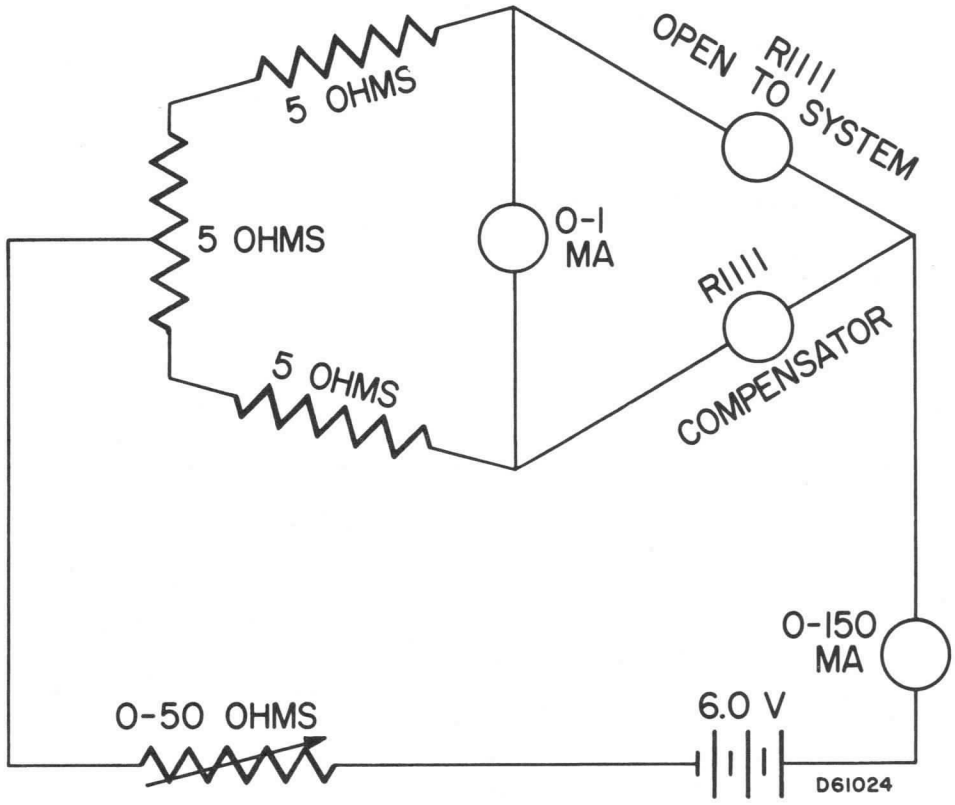

OUTLINE

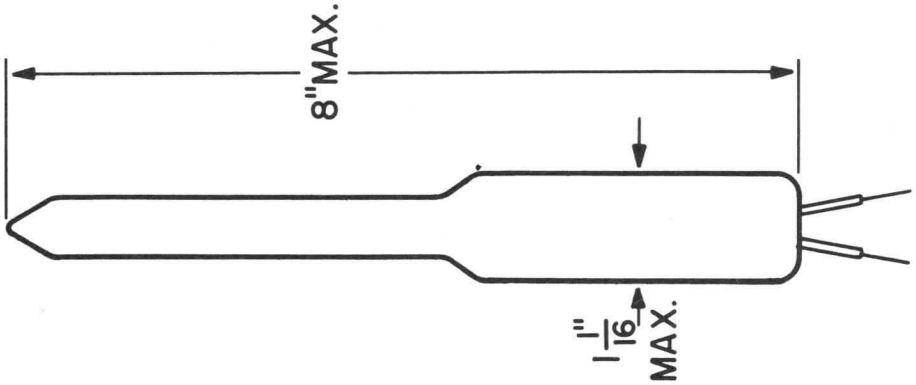

DESCRIPTION

The Sylvania Omegatron Type SY1301 is a mass spectrometer analyzer tube capable of resolving peaks of interest of simple hydrocarbons and fixed gases in the 2 to 50 mass to charge ratio range. By increasing magnetic field strength resolution is extended through mass 80. Useable in a pressure range from 10^{-5} to 10^{-10} torr, it can be incorporated into nearly any high vacuum system where a glass to glass or metal to glass seal can be made. The bulb is Nonex glass and is supplied with graded seals according to customer specifications. It operates at an ionizing current of only one microamp which minimizes gauge pumping and gas reactions. (See Note 5 for additional technical references.)
Type SY1301A is a calibrated unit, being otherwise identical with its counterpart Type SY1301.

QUICK REFERENCE DATA

Omegatron
Mass Spectrometer
Small Size
High Sensitivity
Nonex Glass
Gold Plated Pins
Complete Systems Available

MECHANICAL DATA

Physical Dimensions	See Outline
Filament Emitter	Tungsten
Envelope	7720 Nonex Glass
Maximum Envelope Bake-Out Temperature	450°C
Base	8-Pin, T-9 with Center Lead[3]

Basing

Pin No. 1—Electron Beam Focusing Electrode
Pin No. 2—Filament Emitter
Pin No. 3—Trapping Voltage Cage
Pin No. 4—RF Electrode
Pin No. 5—Electron Collector Electrode
Pin No. 6—Ion Collector Shield (RF Ground)
Pin No. 7—Trapping Voltage Cage
Pin No. 8—Filament Emitter
Center Pin—Ion Collector Electrode

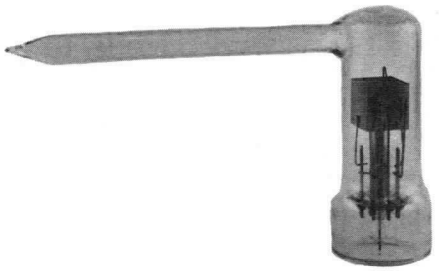

ELECTRICAL DATA

TYPICAL OPERATION[2] (M/e 44-2; Pressure Range 10^{-5} to 10^{-10} Torr)

Frequency of Applied RF	169 to 3720 Kc
Amplitude	1.7 to 3.0 v
Focus Electrode Voltage	−70 Vdc
Trapping Voltage[1]	−0.5 to −2.0 Vdc
Electron Collector Voltage	22.5 Vdc
Magnetic Flux Density	5000 Gauss
Electron Beam Current	1.0 μA
Emitter Voltage Range (Approx.)[4]	1.05 to 1.25 Vac
Ion Collector Current	10^{-10} to 10^{-15} A

NOTES:

1. *With the Omegatron in a properly aligned magnetic field, the trapping voltage is normally −1.0 volt but may be varied in increments of 0.1 volt within the range to obtain maximum sensitivity. For mass 2 trapping voltage is set at 1.9 volts.*
2. *Resolution can be extended through mass 80 by increasing magnetic field strength. The approximate relationship is*

$$\frac{M}{\Delta M} = \frac{edH^2}{2EM}$$

where:
e = *charge of the ion in esu.*
d = *distance from ion collector to electron beam in cm.*
H = *magnetic flux density in gauss.*
E = *high frequency field strength (distance between high frequency electrodes in cm).*
M = *mass of the ion in grams.*

SYLVANIA ELECTRIC PRODUCTS INC.

Electronic Components Group
ELECTRONIC TUBE DIVISION
EMPORIUM, PA.

A Technical Publication

JUNE, 1964

File Under
SPECIAL PURPOSE ELECTRONIC TUBES

NOTES: (Continued)

3. *Base pins are coated with gold to assure low resistance connection with pin clips.*
4. *Following alignment of the Omegatron in the magnetic field, the emitter voltage is adjusted within the specified range to produce a beam current of 1.0 μA.*
5. *The following technical reference booklets are available from Sylvania upon request: (1) Omegatron Mass Spectrometer and (2) Operational Data—Sylvania Omegatron Type SY1301.*

OUTLINE

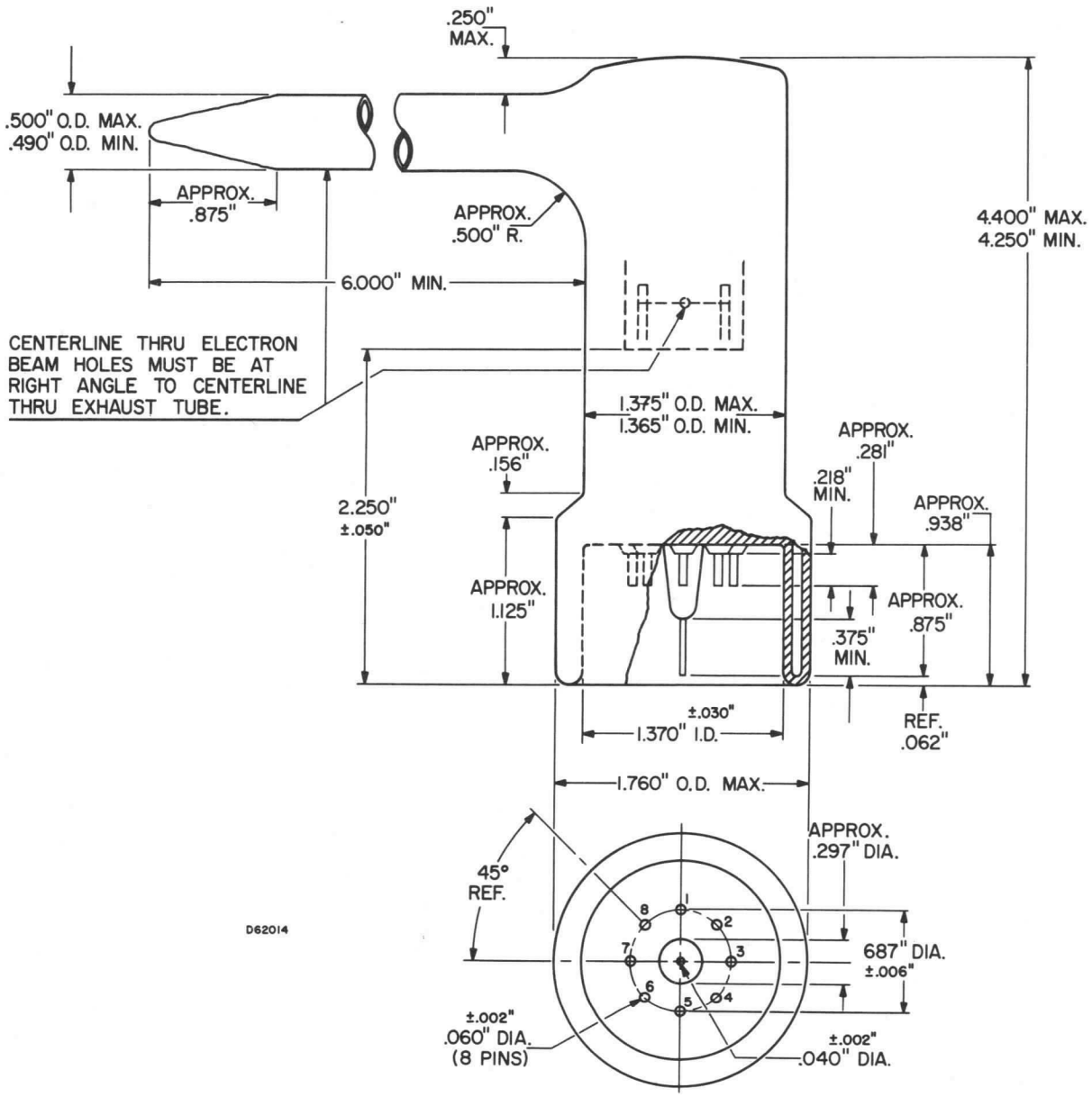

MECHANICAL DATA

Mounting Position	Any
Envelope	Pyrex Glass
Bulb	See Outline Drawing

ELECTRICAL DATA

Filament Voltage	3 to 7.5 V
Filament Current	3.5 to 5 A
Grid Voltage	+150 V
Grid Current	5 mA
Collector Voltage	−25 V

DESCRIPTION:

In the hot filament ionization gauge, such as the SYLVANIA type VG1A, the electrons emitted from a heated filament in the sensing tube are accelerated toward a positively charged cylindrical grid. Some electrons pass into the space between the grid and a negatively charged collector and collide with gas molecules from the vacuum system to produce positive ions. The positive ions are then collected on the negative collector. At a constant voltage and emission current, the number of positive ions formed is proportional to the pressure below 1×10^{-3} mm mercury and the strength of the ion current on the collector is indicated on a microammeter calibrated in units of pressure. Inasmuch as pressure indication is linear, the hot filament gauge is generally considered the most accurate continuous indication for pressures below 1×10^{-3} mm of mercury.

ADVANTAGES:

1. Hot filament gauges are highly sensitive, read to very low pressures and have a broad range.
2. Scalers are linear.
3. The sensing tubes can be easily degassed.

SENSITIVITY:

With all due precautions in degassing, voltage supply, leakage, etc., the sensitivity of the VG1A tube for air falls between 90 and 125 microamperes per micron Hg. A good average value for pressure below one micron is 100 microamperes per micron. Electrode potentials and grid currents other than standard may be used. Sensitivity is directly proportional to grid current but, for maximum tube life, grid currents should be kept low, particularly at pressures above 0.1 micron.

DEGASSING:

For lower pressure measurements (under 1×10^{-5} mm Hg) the tube must be degassed. A current of 7 amperes supplied through a special pair of leads for a few minutes degasses the spiral grid, and a flame touched to the hard-glass envelope outgasses the collector, which consists of a thin internal coating connected by a unique crack-resistant, glass-to-metal seal. The large diameter of the VG1A tubulation also helps reduce inaccuracies due to gas evolution.

INSTALLATION:

An open tubulation is required for installation, but a closed tube is supplied by Sylvania to protect the electrodes against contamination before installation. This tubulation can either be sealed directly to any Pyrex glass system or can be supplied on request with a glass-to-metal seal or ground joint for other types of connection. Normally, the tube is installed in a vertical position, but it can be operated in any position without sagging of the electrodes. The VG1A is also available with ¾ inch tubulation and/or long insulated leads terminating in a Jones plug.

QUICK REFERENCE DATA

A hot filament ionization gauge used to measure pressures down to 10^{-7}mm of mercury.

SYLVANIA
ELECTRONIC TUBES
A Division of
Sylvania Electric Products Inc.
RECEIVING TUBE
OPERATIONS
EMPORIUM, PA.

Prepared and Released By The
TECHNICAL PUBLICATIONS SECTION
EMPORIUM, PENNSYLVANIA

DECEMBER, 1963

File Under
SPECIAL PURPOSE
ELECTRONIC TUBES

AVERAGE PLATE CHARACTERISTICS

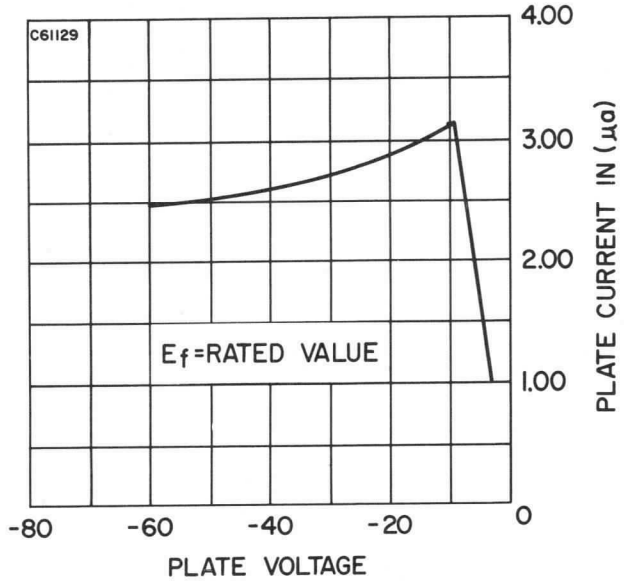

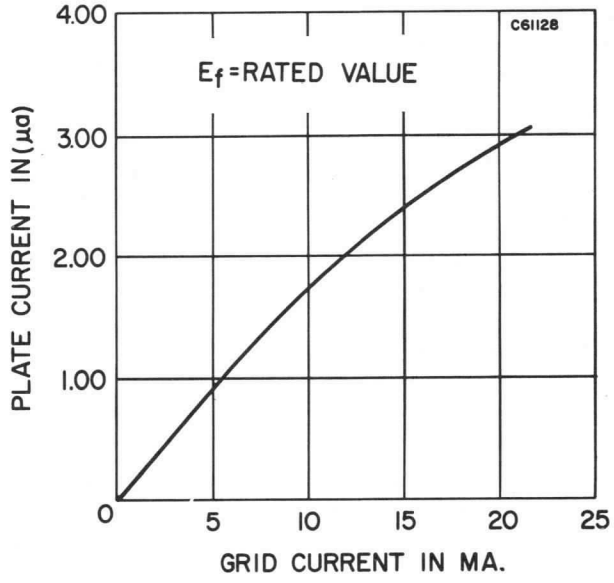

PRESSURE SENSITIVITY

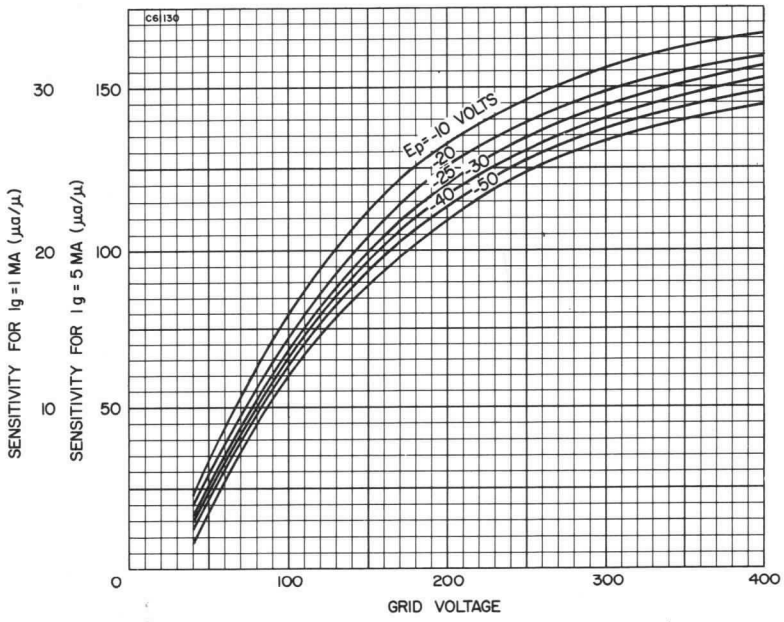

OUTLINE

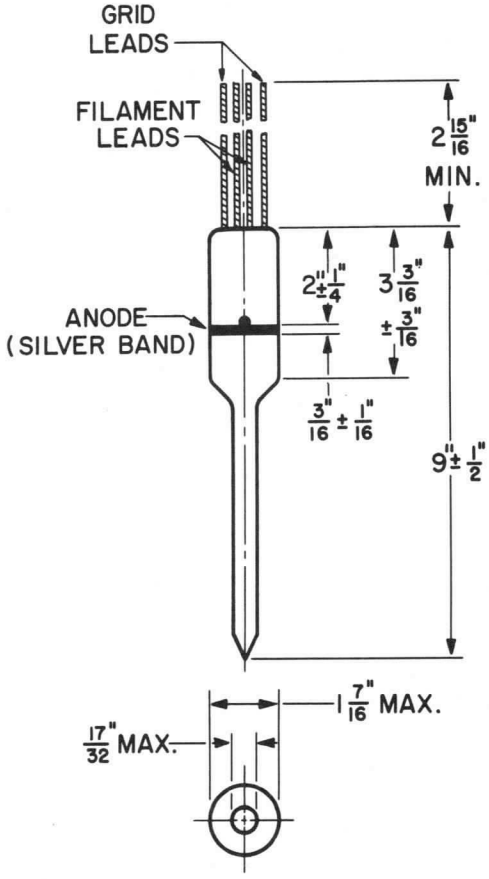

TELEVISION
PICTURE TUBES - DATA

TELEVISION PICTURE TUBE

CROSS REFERENCE CHART

VOL. NO. 3 TELEVISION PICTURE TUBES

Tube Type No.	Data Cross Reference See
8DP4	8DP4
8LP4	8LP4
10BP4, A	Chart 10BP4
12LP4, A, C	Chart 12LP4
14CP4	Chart 14CP4
14QP4, A	Chart 14QP4
14RP4, A	Chart 14RP4
14SP4	Chart 14SP4
14XP4, A	Chart 14XP4
16ANP4	16ANP4
16AQP4	16ANP4
16BEP4	16BEP4
16TP4	Chart 16TP4
17ATP4/17AVP4, 17ATP4A/17AVP4A	Chart 17ATP4
17BP4, A	Chart 17BP4
17BJP4	Chart 17BJP4
17BKP4, A	Chart 17BKP4
17BVP4	Chart 17BVP4
17BWP4	Chart 17BWP4
17BYP4	Chart 17BYP4
17BZP4	Chart 17BZP4
17CAP4	Chart 17CAP4
17CDP4	Chart 17CDP4
17CFP4	Chart 17CFP4
17CKP4	Chart 17CKP4
17CMP4	Chart 17CMP4
17CNP4	Chart 17CNP4
17CSP4	Chart 17CSP4
17CTP4	Chart 17CTP4
17CVP4	Chart 17CVP4
17DAP4	Chart 17DAP4
17DBP4	Chart 17DBP4
17DCP4	Chart 17DCP4
17DEP4	Chart 17DEP4
17DJP4	Chart 17DJP4
17DKP4	Chart 17DKP4
17DQP4	Chart 17DQP4
17DSP4	17DSP4
17DTP4	17DTP4
17DXP4	Chart 17DXP4
17HP4/17RP4, 17HP4B	Chart 17HP4
17JP4	Chart 17JP4
17LP4/17VP4	Chart 17LP4
17QP4, A	Chart 17QP4
17YP4	Chart 17YP4

Tube Type No.	Data Cross Reference See
19AFP4	19AFP4
19AJP4	19AJP4
19ANP4	19ANP4
19ARP4	19ARP4
19ASP4	19ASP4
19ATP4	19ATP4
19AUP4	19AFP4
19AVP4	19XP4
19AXP4	19XP4
19AYP4	19XP4
19BAP4	19AFP4
19BCP4	19AFP4
19BNP4	19BNP4
19BQP4	19BNP4
19CGP4	19CGP4
19CHP4	19CHP4
19CVP4	19CVP4
19CXP4	19CXP4
19CZP4	19CZP4
19DAP4	19CZP4
19DKP4	19DKP4
19DNP4	19DKP4
19EDP4	19EDP4
19ENP4	19EDP4
19XP4	19XP4
19YP4	19ANP4
20CP4, A	Chart 20CP4
20DP4, A, B, C	Chart 20DP4
20HP4, A/20LP4, 20HP4C, 20HP4D	Chart 20HP4
21ACP4, A	Chart 21ACP4
21AFP4	Chart 21AFP4
21ALP4, A, B	Chart 21ALP4
21AMP4, A	Chart 21AMP4
21ATP4	Chart 21ATP4
21AUP4, A, B	Chart 21AUP4
21AVP4, A, B	Chart 21AVP4
21AWP4	Chart 21AWP4
21AXP22, A	21AXP22
21AYP4	Chart 21AYP4
21BSP4	Chart 21BSP4
21BTP4	Chart 21BTP4
21CBP4, A	21CBP4
21CDP4, A	Chart 21CDP4
21CEP4	Chart 21CEP4
21CMP4	Chart 21CMP4

Tube Type No.	Data Cross Reference See
21CQP4	Chart 21CQP4
21CSP4	Chart 21CSP4
21CXP4	Chart 21CXP4
21CYP22	21CYP22
21CYP22A	21CYP22
21DAP4	Chart 21DAP4
21DEP4	21DEP4
21DHP4	Chart 21DHP4
21DJP4	Chart 21DJP4
21DKP4	Chart 21DKP4
21DLP4	Chart 21DLP4
21DQP4	Chart 21DQP4
21DSP4	Chart 21DSP4
21EP4, A, B	Chart 21EP4
21EAP4	Chart 21EAP4
21ENP4	Chart 21ENP4
21EQP4	Chart 21EQP4
21ERP4	Chart 21ERP4
21EVP4	Chart 21EVP4
21EXP4	Chart 21EXP4
21FP4, A, C	Chart 21FP4
21FAP4	Chart 21FAP4
21FBP22	21CYP22
21FJP22	21CYP22
21FKP22	21CYP22
21WP4, A	Chart 21WP4
21XP4, A	Chart 21XP4
21YP4, A	Chart 21YP4
21ZP4, A, B	Chart 21ZP4
23ACP4	23ACP4
23AFP4	23AFP4
23AHP4	23AHP4
23AKP4	23AKP4
23ALP4	23MP4
23AMP4	23MP4
23ANP4	23ANP4
23ASP4	23ASP4
23ATP4	23ANP4
23AVP4	23CP4
23AYP4	23CP4
23BDP4	23XP4
23BGP4	23BGP4
23BHP4	23BGP4
23BQP4	23UP4
23BRP4	23BRP4
23BTP4	23XP4

Tube Type No.	Data Cross Reference See
23CP4	23CP4
23CBP4	23UP4
23CTP4	23CTP4
23CZP4	23CZP4
23DP4	23DP4
23DHP4	23DHP4
23DJP4	23DHP4
23DKP4	23DKP4
23DTP4	23DTP4
23DVP4	23DVP4
23DZP4	23DVP4
23EP4	23EP4
23EAP4	23CTP4
23JP4	23JP4
23MP4	23MP4
23RP4	23BRP4
23SP4	23CP4
23TP4	23ACP4
23UP4	23UP4
23XP4	23XP4
23YP4	23XP4
24ADP4	Chart 24ADP4
24AEP4	Chart 24AEP4
24AHP4	Chart 24AHP4
24AJP4	Chart 24AJP4
24AMP4	Chart 24AMP4
24ANP4	Chart 24ANP4
24AQP4	Chart 24AQP4
24ASP4	Chart 24ASP4
24AUP4	Chart 24AUP4
24AVP4	Chart 24AVP4
24AXP4	Chart 24AXP4
24CP4, A	Chart 24CP4
24DP4, A	Chart 24DP4
24YP4	Chart 24YP4
27ACP4	27ACP4
27ADP4	27ADP4
27AFP4	27ADP4
27EP4	Chart 27EP4
27GP4	Chart 27GP4
27NP4	Chart 27NP4
27RP4	Chart 27RP4
27SP4	Chart 27SP4
27XP4	27XP4
27ZP4	27ZP4

CONDENSED DATA — TELEVISION PICTURE TUBES

"The Listed Television Picture Tubes Have Been Generally Superseded by Newer Tube Types in the Designing of Original Equipment"

⊕ Type No.	Heater▲		Nominal Bulb Dimensions in Inches		Base	Basing	Bulb Characteristics					Design Maximum Ratings♦			Typical Operation			
	Volts	Amperes	Faceplate	Length			‡ Faceplate	Magnetic Deflection Angle and Neck Diam.■	Bulb Coating Capacitance pf	Ion Trap	Focusing Method	Anode Volts	Focusing Grid Volts	Accelerator Grid Volts	Anode Volts	Focus Electrode Volts Magnet Coil Current in Ma.	Accelerator Grid Volts	Control Grid Volts*
24AHP4	6.3	0.6	21 7/16 x 16 7/8	15 7/8	7-Pin B7-183#	8HR	GA	110	1700-2500	None	Electrostatic	22,000	−550 to +1100	550	16,000	−50 to +350	300	35-72
24AJP4	6.3	0.60	22 11/16 x 18 7/16	19 1/8	6-Pin B6-63	12L	Gray A	90	2000-2500	None	Electrostatic	22,000	−550 to +1100	70*	18,000	0 to 350	50*	35-50φ
													CATHODE DRIVE OPERATING VALUES					
24AMP4	6.3	0.6	22 11/16 x 18 1/2	15 5/8	6-Pin B6-185	7FA	Gray A	110	2000-2500	None	Electrostatic	22,000	−550 to +1100	550	16,000	0 to +400	300	40-77
24ANP4	6.3	0.6	22 43/64 x 18 7/16	20 1/8	6-Pin B6-63	12L	Gray A	90	1700-2500	None	Electrostatic	22,000	−550 to +1100	550	18,000	−72 to +396	300	40-77
24AQP4	6.3	0.45	22 11/16 x 18 1/2	15 7/8	7-Pin B7-183#	8HR	Gray A	110	1700-2500	None	Electrostatic	22,000	−550 to +1100	550	16,000	0 to +400	300	40-77
24ASP4	6.3	0.3	21 7/16 x 16 7/8	19 1/8	6-Pin B6-63	12L	GA	90	1700-2500	None	Electrostatic	22,000	−550 to +1100	550	18,000	0 to +400	300	35-72
24AUP4	6.3	0.6	21 7/16 x 16 7/8	18 1/8	6-Pin B6-63 or B6-203	12L	GA	90	1700-2500	None	Electrostatic	22,000	−550 to +1100	550	18,000	−75 to +400	300	35-72
24AVP4	2.35	0.6	21 7/16 x 16 7/8	14 13/16	7-Pin B7-208#	8JK	GA	110	1700-2500	None	Electrostatic	20,000	−550 to +1100	550	16,000	−100 to +300	300	35-72
24AXP4	6.3	0.3	21 7/16 x 16 7/8	15 7/8	7-Pin B7-183#	8HR	GA	110	1700-2500	None	Electrostatic	22,000	−550 to +1100	550	16,000	0 to +400	300	35-72
24CP4 24CP4A	6.3	0.6	22 11/16 x 18 7/16	21 1/8	5-Pin B5-57	12N	Gray GA	90	2000-2500	Single	Magnetic	22,000	.....	550	18,000	100 Ma.	300	33-77
24DP4 24DP4A	6.3	0.6	22 11/16 x 18 7/16	21 1/8	6-Pin B6-63	12L	Gray GA	90	2000-2500	Single	Magnetic	22,000	−550 to +1100	550	18,000	−72 to +396	300	33-77
24YP4	6.3	0.6	22 43/64 x 18 7/16	21 1/8	6-Pin B6-63	12L	Gray A	90	2000-2500	Single	Electrostatic	22,000	−550 to +1100	550	18,000	−72 to +396	300	33-77
27EP4	6.3	0.6	25 9/32 x 20 7/32	23 1/16	5-Pin B5-57	12D	Gray A	90	None	Single	Magnetic	22,000	.....	550	16,000	118 Ma.	300	33-77
27GP4	6.3	0.6	25 9/32 x 20 7/32	23 1/16	5-Pin B5-57	12D	Gray	90	None	Single	Magnetic	24,750	.....	550	20,000	125 Ma.	300	33-77
27NP4	6.3	0.6	25 9/32 x 20 7/32	23	5-Pin B5-57	12N	Gray	90	2000-2500	Single	Magnetic	19,800	.....	550	16,000	95 Ma.	300	33-77
27RP4	6.3	0.6	25 9/32 x 20 7/32	23 1/16	5-Pin B5-57	12N	Gray A	90	500-2500	Single	Magnetic	22,000	.....	550	20,000	125 Ma.	300	33-77
27SP4	6.3	0.6	25 9/32 x 20 7/32	23 1/16	6-Pin B6-63	12L	Gray A	90	500-750	Single	Electrostatic	22,000	−550 to +1100	550	18,000	−72 to +396	300	33-77

ALL BULBS SHOWN ARE OF GLASS CONSTRUCTION AND ALL TYPES HAVE A RECESSED SMALL CAVITY CAP ANODE TERMINAL.

* Voltage measured from the accelerator grid to the control grid.

▲ All Sylvania Television Picture Tubes feature a controlled heater warm-up time of 11 seconds for operation in receivers employing series heater strings.

♦ Design-Maximum Ratings—limiting values of operating and environmental conditions applicable to a bogey tube that should not be exceeded under the worst probable conditions.

■ Nominal neck diameter for 50°, 70° and 90° types is 1 7/16 inches, 110° types indicates small diameter neck (1 1/8 inches nominal diameter).

‡ Face Plate Treatments G = Gray, F = Frosted, A = Aluminized, Cyl. = Cylindrical.

⊕ Commonly used Screens listed, others may be available on certain types.

* Control grid bias for visual extinction of undeflected focused spot. For Television Picture Tubes, visual extinction of focused raster will generally require about 5 volts less bias.

φ Voltages shown are positive, measured at cathode.

0.04 Diameter Pins integral with tube header and attachable index guide.

CONDENSED DATA — TELEVISION PICTURE TUBES

"The Listed Television Picture Tubes Have Been Generally Superseded by Newer Tube Types in the Designing of Original Equipment"

⊕ Type No.	Heater▲		Nominal Bulb Dimensions in Inches		Base	Basing	Bulb Characteristics					Design Maximum Ratings♦			Typical Operation			
	Volts	Amperes	Faceplate	Length			‡ Faceplate	Magnetic Deflection Angle and Neck Diam.■	Bulb Coating Capacitance pf	Ion Trap	Focusing Method	Anode Volts	Focusing Grid Volts	Accelerator Grid Volts	Anode Volts	Focus Electrode Volts Magnet Coil Current in Ma.	Accelerator Grid Volts	Control Grid Volts*
21CDP4 21CDP4A	6.3	0.45	20¼ x 16⅜	20	6-Pin B6-63	12L	Gray GA	90	2000-2500	Single	Electrostatic	22,000	−550 to +1100	550	16,000	−64 to +352	300	33-77
21CEP4	6.3	0.6	19⅛ x 15⅛	14⅞	7-Pin B7-183#	8HR	GA	110	2000-2500	None	Electrostatic	19,800	−550 to +1100	550	16,000	0 to +400	300	35-72
21CMP4	6.3	0.60	20¼ x 16⅜	19	6-Pin B6-63	12L	Gray A	90	2000-2500	Single	Electrostatic	22,000	−550 to +1100	550	16,000	−64 to +352	300	33-77
21CQP4	6.3	0.6	19⅛ x 15⅛	14⅞	6-Pin B6-63	7FA	GA	110	2000-2500	None	Electrostatic	19,800	−550 to +1100	550	16,000	−50 to +350	300	35-72
21CSP4	6.3	0.45	20¼ x 16⅜	14⅞	6-Pin B6-185	7FA	Gray A	110	2000-2500	None	Electrostatic	19,800	−550 to +1100	550	16,000	0 to +400	300	40-77
21CXP4	6.3	0.60	20¼ x 16⅜	18	6-Pin B6-63 or B6-203	12L	Gray A	90	2000-2500	None	Electrostatic	22,000	−550 to +1100	70*	18,000	0 to +350	50*	39-57ϕ
												CATHODE DRIVE OPERATING VALUES						
21DAP4	6.3	0.6	19⅛ x 15⅛	14¹¹⁄₁₆	7-Pin B7-183#	8HR	GA	110	2000-2500	None	Electrostatic	19,800	−550 to +1100	550	16,000	0 to +400	300	35-72
21DHP4	6.3	0.45	20¼ x 16⅜	14¹¹⁄₁₆	7-Pin B7-183#	8HR	Gray A	110	1700-2500	None	Electrostatic	19,800	−550 to +1100	550	16,000	0 to +400	300	40-77
21DJP4	6.3	0.30	20¼ x 16⅜	18	6-Pin B6-63 or B6-203	12L	Gray A	90	2000-2500	None	Electrostatic	22,000	−550 to +1100	550	16,000	−50 to +350	300	40-77
21DKP4	6.3	0.30	20¼ x 16⅜	14¹¹⁄₁₆	7-Pin B7-183#	8HR	Gray A	110	1700-2500	None	Electrostatic	19,800	−550 to +1100	550	16,000	0 to +400	300	40-77
21DLP4	6.3	0.6	19⅛ x 15⅛	17	6-Pin B6-63 or B6-203	12L	GA	90	2000-2500	None	Electrostatic	22,000	−550 to +1100	550	18,000	0 to +400	300	35-72
21DQP4	6.3	0.6	19⅛ x 15⅛	17½	6-Pin B6-63 or B6-203	12L	GA	90	2000-2500	None	Electrostatic	20,000	−550 to +1100	550	16,000	−50 to +350	300	35-72
21DSP4	6.3	0.60	20¼ x 16⅜	18	6-Pin B6-63 or B6-203	12L	Gray A	90	2000-2500	None	Electrostatic	22,000	−550 to +1100	70*	16,000	0 to +400	50*	37-55ϕ
												CATHODE DRIVE OPERATING VALUES						
21EAP4	2.35	0.60	20¼ x 16⅜	12¹⁵⁄₁₆	7-Pin B7-208#	8JK	Gray A	110	1500-2000	None	Electrostatic	20,000	−550 to +1100	700	16,000	+150 to +550	300	39-65ϕ
												CATHODE DRIVE OPERATING VALUES						
21ENP4	6.3	0.30	20¼ x 16⅜	19	6-Pin B6-63	12L	Gray A	90	2000-2500	Single	Electrostatic	22,000	−550 to +1100	550	16,000	−64 to +352	300	40-77
21EP4 21EP4A 21EP4B	6.3	0.6	20¼ x 15⁹⁄₁₆	23	5-Pin B5-57	12D 12N 12N	G Cyl. G Cyl. GA Cyl.	70	None 500-750 500-750	Single	Magnetic	19,800	.....	550	16,000	95 Ma.	300	33-77
21EQP4	6.3	0.6	19⅛ x 15⅛	12⅝	7-Pin B7-208#	8JR	GA	110	2000-2500	None	Electrostatic	20,000	0 to +700	600	16,000	0 to +400	500	43-78
21ERP4	6.3	0.6	19⅛ x 15⅛	12¹³⁄₁₆	7-Pin B7-208#	8JR	GAF	110	1500-2000	None	Electrostatic	20,000	0 to +700	600	16,000	0 to +400	500	43-72
21EVP4	2.68	0.45	19⅛ x 15⅛	12¹⁵⁄₁₆	7-Pin B7-208#	8JK	GA	110	1500-2000	None	Electrostatic	20,000	−700 to +950	550	16,000	+100 to +500	300	35-72
21EXP4	6.3	0.30	20¼ x 16⅜	12⅝	7-Pin B7-208#	8JR	Gray A	110	2000-2500	None	Electrostatic	20,000	+700	600	16,000	0 to +400	500	48-83
21FP4 21FP4A 21FP4C	6.3	0.6	20¼ x 15⁹⁄₁₆	23	6-Pin B6-63	12M 12L 12L	G Cyl. G Cyl. GA Cyl.	70	None 500-750 500-750	Single	Electrostatic	19,800	−550 to +1100	550	16,000	−64 to +350	300	33-77
21FAP4	6.3	0.60	20¼ x 16⅜	12¹³⁄₁₆	7-Pin B7-208#	8JR	Gray A	110	2000-2500	None	Electrostatic	22,000	+700	600	16,000	0 to +400	500	48-83
21WP4 21WP4A	6.3	0.6	18¹¹⁄₁₆ x 14¹⁵⁄₁₆	22⅞	5-Pin B5-57	12N	Gray GA	70	500-750	Single	Magnetic	19,800	.....	550	16,000	100 Ma.	300	33-77
21XP4 21XP4A	6.3	0.6	18¹¹⁄₁₆ x 14¹⁵⁄₁₆	22⅞	6-Pin B6-63	12L	Gray GA	70	2000-2500	Single	Electrostatic	19,800	−550 to +1100	550	16,000	−64 to +352	300	33-77
21YP4 21YP4A	6.3	0.6	19⅛ x 14⅜	23	6-Pin B6-63	12L	G GA	70	500-750	Single	Electrostatic	18,000	−500 to +1000	500	16,000	−64 to +350	300	28-72
21ZP4 21ZP4A 21ZP4B	6.3	0.60	20¼ x 15⁹⁄₁₆	23¹⁄₃₂	5-Pin B5-57	12D 12N 12N	Gray Gray Gray A	70	None 500-750 500-750	Single	Magnetic	19,800	.....	550	16,000	95 Ma. 100 Ma. 118 Ma.	300	33-77
24ADP4	6.3	0.6	22¹¹⁄₁₆ x 18⅞	21⅛	5-Pin B5-57	12N	Gray A	90	2000-2500	Single	Magnetic	24,200	.....	660	18,000	125 Ma.	300	33-77
24AEP4	6.3	0.6	21⅞ x 16⅞	19⅛	6-Pin B6-63 or B6-203	12L	GA	90	2000-2500	None	Electrostatic	22,000	−550 to +1100	550	18,000	−50 to +350	300	35-72

CONDENSED DATA — TELEVISION PICTURE TUBES

"The Listed Television Picture Tubes Have Been Generally Superseded by Newer Tube Types in the Designing of Original Equipment"

⊕ Type No.	Heater▲		Nominal Bulb Dimensions in Inches		Base	Basing	Bulb Characteristics					Design Maximum Ratings♦			Typical Operation			
	Volts	Amperes	Faceplate	Length			‡ Faceplate	Magnetic Deflection Angle and Neck Diam.■	Bulb Coating Capacitance pf	Ion Trap	Focusing Method	Anode Volts	Focusing Grid Volts	Accelerator Grid Volts	Anode Volts	Focus Electrode Volts Magnet Coil Current in Ma.	Accelerator Grid Volts	Control Grid Volts*
17DCP4	6.3	0.30	15 3/8 x 12 9/32	14 5/8	6-Pin B6-63	12L	Gray A	90	1000-1500	None	Electrostatic	17,600	−550 to +1100	550	14,000	−50 to +300	300	40-77
17DEP4	2.35	0.60	15 5/8 x 12 3/4	10 7/16	7-Pin B7-208#	8JN	Gray A	110	900-1400	None	Electrostatic	17,600	+700	700	14,000	0 to +400	500	48-77
17DJP4	6.3	0.30	15 3/8 x 12 9/32	15 5/8	6-Pin B6-63	12L	Gray A	90	1000-1500	Single	Electrostatic	17,600	−550 to +1100	550	14,000	−50 to +300	300	40-77
17DKP4	6.3	0.60	15 5/8 x 12 3/4	10 11/16	7-Pin B7-208#	8JR	Gray A	110	1000-1500	None	Electrostatic	20,000	+700	600	14,000	0 to +400	500	48-83
17DQP4	6.3	0.45	15 5/8 x 12 3/4	12 1/8	6-Pin B6-214	7FA	Gray A	110	1200-1700	None	Electrostatic	17,600	−550 to +1100	70*	14,500	−200 to +350	50*	40-55♦
												CATHODE DRIVE OPERATING VALUES						
17DXP4	6.3	0.45	15 5/8 x 12 3/4	10 11/16	7-Pin B7-208#	8JR	Gray A	110	1000-1500	None	Electrostatic	17,600	+700	600	14,000	0 to +400	500	48-83
17HP4/ 17RP4 17HP4B	6.3	0.6	14 5/16 x 11 1/8	19 1/4 19 3/16	6-Pin B6-63	12L	G GA	70	750-1500	Single	Electrostatic	16,000	−500 to +1000	500	14,000	−56 to +310	300	33-77 28-72
17JP4	6.3	0.6	15 25/64 x 12 9/32	19 1/4	5-Pin B5-57	12N	Gray	70	500-1500	Single	Magnetic	19,800	.....	450	14,000	100 Ma.	300	33-77
17LP4/ 17VP4	6.3	0.6	15 3/8 x 12 1/4	19 3/16	6-Pin B6-63	12L	Gray Cyl.	70	750-1500	Single	Electrostatic	17,600	−550 to +1100	550	14,000	−56 to +310	300	33-77
17QP4 17QP4A	6.3	0.6	15 25/64 x 12 9/32	19 3/16	5-Pin B5-57	12N	Gray Cyl. GA Cyl.	70	750-1500	Single	Magnetic	17,600 19,800	.....	450	14,000	100 Ma. 95 Ma.	300	33-77
17RP4	6.3	0.6	14 5/16 x 11 1/8	19 1/4	6-Pin B6-63	12L	G	70	750-1500	Single	Electrostatic	16,000	−500 to +1000	500	14,000	−56 to +310	300	33-77
17YP4	6.3	0.6	15 25/64 x 12 9/32	19 3/16	5-Pin B5-57	12N	Gray Cyl.	70	500-1500	Single	Magnetic	19,800	.....	550	16,000	100 Ma.	300	33-77
20CP4 20CP4A	6.3	0.6	18 11/16 x 14 15/16	21 7/16	5-Pin B5-57	12D 12N	Gray	70	None 500-1500	Single	Magnetic	19,800	.....	450	16,000	110 Ma.	300	33-77
20DP4 20DP4A 20DP4B 20DP4C	6.3	0.6	18 11/16 x 14 15/16	21 3/4	5-Pin B5-57	12D 12N 12D 12N	Gray Gray GA GA	70	None 500-1500 None 500-1500	Single	Magnetic	19,800	.....	450	16,000	110 Ma.	300	33-77
20HP4 20HP4A/ 20LP4 20HP4C 20HP4D	6.3	0.6	18 11/16 x 14 15/16	21 3/4	6-Pin B6-63	12M 12L 12M 12L	Gray Gray GA GA	70	None 500-1500 None 500-1500	Single	Electrostatic	17,600	−550 to +1100	550	14,000	−56 to +310	300	33-77
21ACP4 21ACP4A	6.3	0.6	20 1/4 x 16 3/8	20	5-Pin B5-57	12N	Gray GA	90	2000-2500	Single	Magnetic	22,000	.....	550	16,000	117 Ma.	300	33-77
21AFP4	6.3	0.6	19 1/8 x 14 3/16	23	6-Pin B6-63	12M	G	70	None	Single	Electrostatic	18,000	−500 to +1000	500	16,000	−64 to +350	300	28-72
21ALP4 21ALP4A 21ALP4B	6.3	0.6	20 1/4 x 16 3/8	20	6-Pin B6-63	12L	Gray GA	90	500-750	Single	Electrostatic	19,800 19,800 22,000	−550 to +1100	550	16,000	−64 to +350	300	33-77
21AMP4 21AMP4A	6.3	0.6	20 1/4 x 16 3/8	20	5-Pin B5-57	12N	Gray GA	90	2000-2500	Single	Magnetic	19,800	.....	550	16,000	102 Ma.	300	33-77
21ATP4	6.3	0.6	19 1/16 x 15 1/16	20	6-Pin B6-63	12L	GA	90	1200-1500	Single	Electrostatic	18,000	−500 to +1000	500	16,000	−64 to +352	300	28-72
21AUP4 21AUP4A 21AUP4B	6.3	0.6	20 1/4 x 16 3/8	23 1/32	6-Pin B6-63	12L	Gray GA GA	72	2000-2500	Single	Electrostatic	19,800 19,800 22,000	−550 to +1100	550	16,000	−64 to +352	300	33-77
21AVP4 21AVP4A 21AVP4B	6.3	0.6	20 1/4 x 16 3/8	23 1/32	6-Pin B6-63	12L	Gray GA GA	72	2000-2500	Single	Electrostatic	19,800 19,800 22,000	−550 to +1100	550	16,000	−64 to +352	300	33-77
21AWP4	6.3	0.6	20 1/4 x 16 3/8	23 1/32	5-Pin B5-57	12N	Gray A	72	2000-2500	Single	Magnetic	19,800	.....	550	16,000	108 Ma.	300	33-77
21AYP4	6.3	0.6	18 11/16 x 14 15/16	22 7/16	6-Pin B6-63	12L	Gray	70	750-2500	Single	Electrostatic	19,800	−550 to +1100	550	16,000	−64 to +352	300	33-77
21BSP4	6.3	0.6	20 1/4 x 16 3/8	20	5-Pin B5-57	12N	Gray A	90	2000-2500	Single	Magnetic	22,000	.....	550	16,000	116 Ma.	300	33-77
21BTP4	6.3	0.6	19 1/16 x 15 1/16	20	6-Pin B6-63	12L	GA	90	2000-2500	Single	Electrostatic	22,000	−550 to +1100	550	16,000	−64 to +352	300	28-72

CONDENSED DATA — TELEVISION PICTURE TUBES

"The Listed Television Picture Tubes Have Been Generally Superseded by Newer Tube Types in the Designing of Original Equipment"

⊕ Type No.	Heater▲		Nominal Bulb Dimensions in Inches		Base	Basing	Bulb Characteristics					Design Maximum Ratings♦			Typical Operation			
	Volts	Amperes	Faceplate	Length			‡ Faceplate	Magnetic Deflection Angle and Neck Diam.■	Bulb Coating Capacitance pf	Ion Trap	Focusing Method	Anode Volts	Focusing Grid Volts	Accelerator Grid Volts	Anode Volts	Focus Electrode Volts Magnet Coil Current in Ma.	Accelerator Grid Volts	Control Grid Volts*
10BP4 10BP4A	6.3	0.6	10½ Diam.	17⅝	5-Pin B5-57	12N	Clear Gray	50	500-2500	Double	Magnetic	11,000	.....	450	9,000	100 Ma. 110 Ma.	250	27-63
12LP4 12LP4A 12LP4C	6.3	0.6	12 7/16 Diam.	18¾	5-Pin B5-57	12N	Clear Gray GA	54	750-3000	Double	Magnetic	13,200	.....	450	11,000	110 Ma.	250	27-63
14CP4	6.3	0.6	12 9/16 x 9¾	16¾	5-Pin B5-57	12N	Gray	70	750-2000	Single	Magnetic	15,400	.....	450	12,000	115 Ma.	300	33-77
14QP4 14QP4A	6.3	0.6	12 9/16 x 9¾	16 5/32	6-Pin B6-63	12L	Gray GA	70	600-1000	Single	Electrostatic	12,100	−550 to +1100	550	9,000	−50 to +250	250	29-69
14RP4 14RP4A	6.3	0.6	13 1/16 x 10 9/16	14 3/16	6-Pin B6-63	12L	Gray GA	90	800-1200	Single	Electrostatic	15,400	−550 to + 550	440	14,000	+70 to +470	300	31-75
14SP4	6.3	0.6	13 1/16 x 10 9/16	14 3/16	6-Pin B6-63	12L	Gray A	90	900-1200	Single	Electrostatic	15,400	−550 to +1100	550	12,000	−48 to +264	300	33-77
14XP4 14XP4A	6.3	0.45	13 1/16 x 10 9/16	14 3/16	6-Pin B6-63	12L	Gray GA	90	1100-1500	Single	Electrostatic	16,500	−550 to +1100	440	12,000	−50 to +350	300	33-77
16TP4	6.3	0.6	14¾ x 11½	18⅛	5-Pin B5-57	12N	Gray	70	750-2000	Single	Magnetic	15,400	.....	450	12,000	115 Ma.	300	33-77
17ATP4/ 17AVP4 17ATP4A/ 17AVP4A	6.3	0.6	14 5/16 x 11⅛	15⅝	6-Pin B6-63	12L	G GA	90	1000-1500	Single	Electrostatic	17,600	−550 to +1100	550	14,000	−56 to +310	300	28-72
17BJP4	6.3	0.6	14 5/16 x 11⅛	14 5/16	6-Pin B6-63 or B6-203	12L	GA	90	1000-1500	None	Electrostatic	17,600	−550 to +1100	550	14,000	−50 to +300	300	28-72
17BP4 17BP4A	6.3	0.6	15 25/64 x 12 9/32	19¼	5-Pin B5-57	12D 12N	Gray	70	None 750-1500	Single	Magnetic	17,600	.....	450	14,000	100 Ma.	300	33-77
17BKP4 17BKP4A	6.3	0.45	15⅜ x 12 9/32	15⅝	6-Pin B6-63	12L	Gray GA	90	1200-1500	Single	Electrostatic	17,600	−550 to +1100	550	14,000	−56 to +310	300	33-77
17BVP4	6.3	0.6	15⅝ x 12¾	13¼	6-Pin B6-185	7FA	Gray A	110	1000-1500	Single	Electrostatic	17,600	−550 to +1100	550	14,000	−50 to +350	300	40-77
17BWP4	6.3	0.6	14 ¾ x 11 11/16	12 5/16	6-Pin B6-185	7FA	GA	110	1000-1500	None	Electrostatic	17,600	−550 to +1100	550	14,000	−50 to +350	300	35-72
17BYP4	6.3	0.45	15⅝ x 12¾	12 5/16	6-Pin B6-185	7FA	Gray A	110	1000-1500	None	Electrostatic	17,600	−550 to +1100	550	14,000	0 to +400	300	40-77
17BZP4	6.3	0.6	14 ¾ x 11 11/16	12 9/16	7-Pin B7-183#	8HR	GA	110	1000-1500	None	Electrostatic	17,600	−550 to +1100	550	14,000	0 to +400	300	35-72
17CAP4	6.3	0.6	14 ¾ x 11 11/16	12 9/16	7-Pin B7-183#	8HR	GA	110	1000-1500	None	Electrostatic	17,600	−550 to +1100	550	14,000	−50 to +350	300	35-72
17CDP4	8.4	0.45	15⅝ x 12¾	12 9/16	7-Pin B7-183#	8HR	Gray A	110	800-1500	None	Electrostatic	17,600	−550 to +1100	550	14,000	0 to +400	300	33-77
17CFP4	6.3	0.6	15⅝ x 12¾	15	6-Pin B6-63 or B6-203	12L	Gray A	90	1200-1500	None	Electrostatic	17,600	−550 to +1100	550	14,000	−50 to +350	300	33-77
17CKP4	6.3	0.6	14 ¾ x 11 11/16	12 9/16	6-Pin B6-63#	8HR	GA	110	1000-1500	None	Electrostatic	16,500	−550 to +1100	550	14,000	0 to +400	300	35-72
17CMP4	6.3	0.6	15⅜ x 12¼	14⅝	6-Pin B6-63	12L	Gray A	90	1000-1500	None	Electrostatic	17,600	−550 to +1100	70*	14,000	0 to +400	50*	40-55φ
													CATHODE DRIVE OPERATING VALUES					
17CNP4	6.3	0.6	15⅝ x 12¾	15	6-Pin B6-63	12L	Gray A	90	1000-1500	None	Electrostatic	17,600	−550 to +1100	70*	14,000	0 to +400	50*	40-55φ
													CATHODE DRIVE OPERATING VALUES					
17CSP4	6.3	0.6	15⅝ x 12¾	12 5/16	6-Pin B6-185	7FA	Gray A	110	900-1400	None	Electrostatic	17,600	−550 to +1100	550	14,000	−50 to +350	300	40-77
17CTP4	6.3	0.45	15⅝ x 12¾	12 9/16	7-Pin B7-183#	8HR	Gray A	110	1000-1500	None	Electrostatic	17,600	−550 to +1100	550	14,000	0 to +400	300	40-77
17CVP4	6.3	0.30	15⅝ x 12¾	12 9/16	7-Pin B7-183#	8HR	Gray A	110	1000-1500	None	Electrostatic	17,600	−550 to +1100	550	14,000	0 to +400	300	40-77
17DAP4	2.68	0.45	15⅝ x 12¾	10 11/16	7-Pin B7-208#	8JK	Gray A	110	900-1400	None	Electrostatic	17,600	−700 to + 950	550	14,000	+100 to +500	300	40-77
17DBP4	6.3	0.30	15 25/64 x 12 9/32	19 3/16	6-Pin B6-63	12L	Gray A	70	750-1500	Single	Electrostatic	17,600	−550 to +1100	550	14,000	−50 to +300	300	40-77

CHARACTERISTICS

GENERAL DATA

Focusing Method	Electrostatic	
Deflection Method	Magnetic	
Deflection Angles (Approx.)		
Horizontal	85	Degrees
Diagonal	90	Degrees
Vertical	68	Degrees
Phosphor	P4	
Fluorescence	White	
Persistence	Short to Medium	
Faceplate	Gray Filter Glass	
Light Transmittance (Approx.)	80	Percent

ELECTRICAL DATA

Heater Voltage	6.3	Volts	
Heater Current	0.6 ± 5%	Ampere	
Direct Interelectrode Capacitance (Approx.)			
Cathode to All Other Electrodes	5	μμf	
Grid No. 1 to All Other Electrodes	6	μμf	
External Conductive Coating to Anode[1]	350	μμf	Max.
	250	μμf	Min.
Ion Trap Magnet	External, Single Field		

MECHANICAL DATA

Minimum Useful Screen Dimensions (Maximum Assured)	7-3/16 x 5⅜	Inches
Minimum Useful Screen Area	35.5	Sq. Inches
Neck Length	6½ ± 3/16	Inches
Overall Length	10-7/16 ± 5/16	Inches
Bulb	J67½A	
Bulb Contact (Recessed Small Cavity Cap)	J1-21	
Base	B6-158	
Basing	12AB	
Weight (Approx.)	3	Pounds

RATINGS

MAXIMUM RATINGS (Design Maximum Values)

Grid Drive Service[2]

Anode Voltage	8800	Volts	dc
Grid No. 4 Voltage (Focusing Electrode)	−550 to +550	Volts	dc
Grid No. 2 Voltage	330	Volts	dc
Grid No. 1 Voltage			
Negative Bias Value	110	Volts	dc
Negative Peak Value	145	Volts	
Positive Bias Value	0	Volts	dc
Positive Peak Value	2	Volts	

Cathode Drive Service[4]

Anode Voltage	8800	Volts	dc
Grid No. 4 Voltage (Focusing Electrode)	−550 to +550	Volts	dc
Grid No. 2 Voltage	440	Volts	dc
Cathode Voltage			
Positive Peak Value	145	Volts	
Positive Bias Value	110	Volts	dc
Negative Bias Value	0	Volts	dc
Negative Peak Value	2	Volts	
Peak Heater-Cathode Voltage			
Heater Negative with Respect to Cathode	200	Volts	
Heater Positive with Respect to Cathode	200	Volts	

QUICK REFERENCE DATA

Television Picture Tube
8" Direct Viewed
Rectangular Glass Type
Spherical Faceplate
Gray Filter Glass
Electrostatic Focus
90° Magnetic Deflection
Single Field Ion Trap
External Conductive Coating

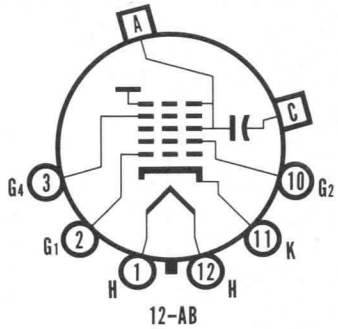

12-AB

SYLVANIA
ELECTRONIC TUBES
A Division of
Sylvania Electric Products Inc.
PICTURE TUBE OPERATIONS
SENECA FALLS, NEW YORK

Prepared and Released By The
TECHNICAL PUBLICATIONS SECTION
EMPORIUM, PENNSYLVANIA

JUNE, 1961

File Under
TELEVISION PICTURE TUBES

TYPICAL OPERATING CONDITIONS

Grid Drive Service[2]

Anode Voltage	6,000	8,000 Volts	dc
Grid No. 4 Voltage for Focus	+15 to +315	+60 to +360 Volts	dc
Grid No. 2 Voltage	150	200 Volts	dc
Grid No. 1 Voltage Required for Cutoff[3]	−13 to −35	−17 to −46 Volts	dc
Ion Trap Magnet Strength (Min.)[5]	31	36 Gausses	

Cathode Drive Service[4]

Anode Voltage	6,000	8,000 Volts	
Grid No. 4 Voltage for Focus	+15 to +315	+60 to +360 Volts	
Grid No. 2 Voltage	150	200 Volts	
Cathode Voltage Required for Cutoff[3]	+14 to +30	+17 to +39 Volts	
Ion Trap Magnet Strength (Min.)[5]	31	36 Gausses	

CIRCUIT VALUES

Grid No. 1 Circuit Resistance	1.5 Megohms Max.

NOTES:

1. *External conductive coating must be grounded.*
2. *Voltages are positive with respect to cathode unless indicated otherwise.*
3. *Visual extinction of focused raster. Extinction of stationary focused spot will require that these values be about 5 volts greater.*
4. *Voltages are positive with respect to Grid No. 1 unless indicated otherwise.*
5. *For JEDEC Ion Trap No. 117 or equivalent located with the trailing edge of the pole pieces located over the gap between Grid No. 1 and Grid No. 2 and rotated to give maximum brightness.*

WARNING:

X-ray radiation shielding may be necessary to protect against possible danger of personal injury from prolonged exposure at close range if this tube is operated at higher than the manufacturer's Maximum Rated Anode Voltage or 16,000 volts, whichever is less.

OUTLINE

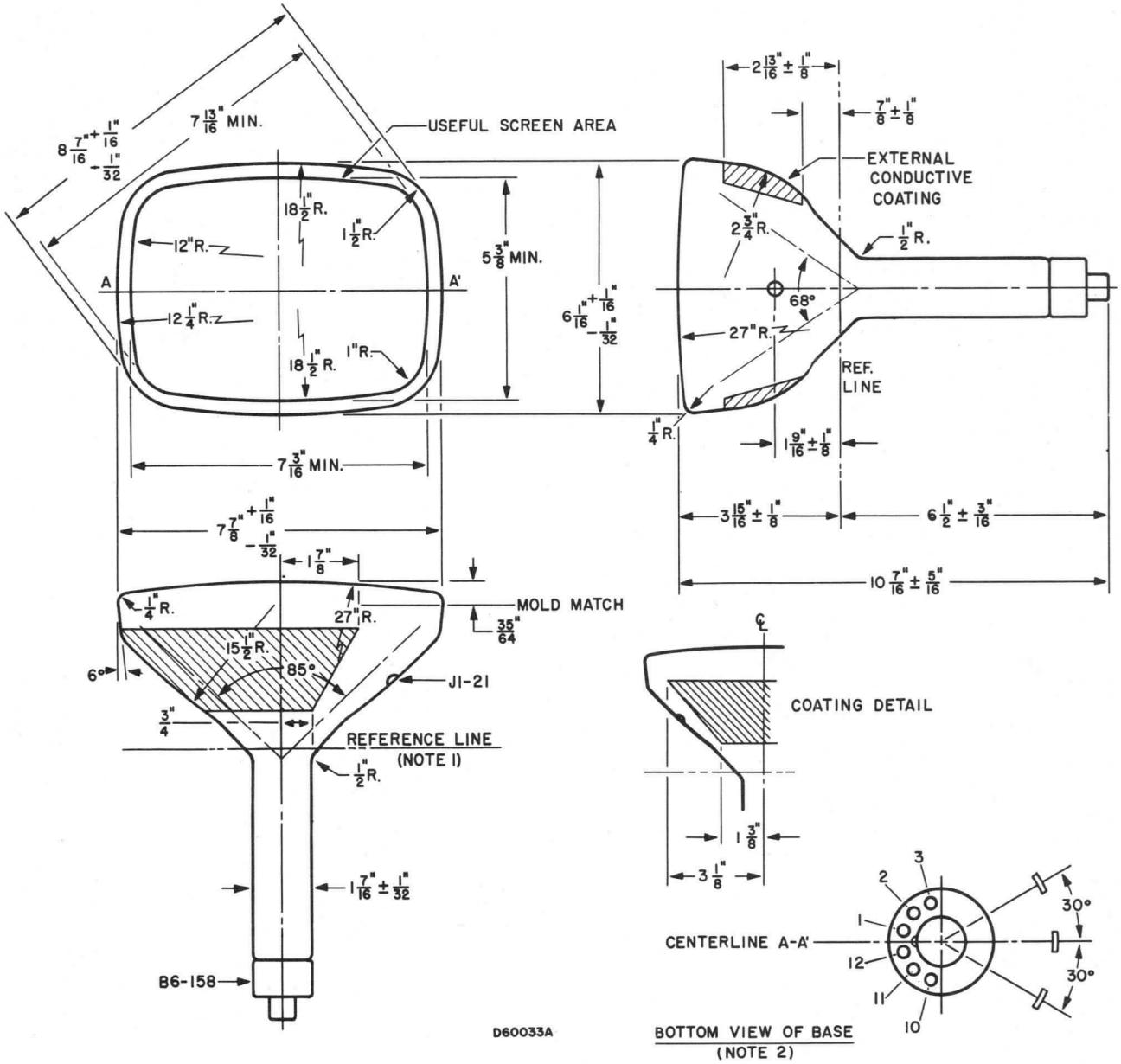

DIAGRAM NOTES:

1. *Reference line is determined by plane C-C' of JEDEC No. 116 Reference Line Gauge, when the gauge is seated against the bulb.*
2. *Base Pin Position No. 6 aligns with horizontal centerline (A-A') within 30° and is on same side as anode contact (J1-21).*

CHARACTERISTICS

GENERAL DATA

Focusing Method	Electrostatic
Deflecting Method	Magnetic
Deflection Angles (Approx.)	
Vertical	87 Degrees
Horizontal	105 Degrees
Diagonal	110 Degrees
Phosphor	Aluminized P4
Fluorescence	White
Persistence	Short to Medium
Faceplate	Gray Filter Glass
Light Transmittance (Approx.)	80 Percent

ELECTRICAL DATA

Heater Voltage	6.3 Volts	
Heater Current	0.30 ± 5% Ampere	
Heater Warm-up Time[1]	11 Seconds	
Direct Interelectrode Capacitances (Approx.)		
Cathode to All Other Electrodes	4 $\mu\mu$f	
Grid No. 1 to All Other Electrodes	6 $\mu\mu$f	
External Conductive Coating to Anode[2]	400 $\mu\mu$f	Max.
	200 $\mu\mu$f	Min.

MECHANICAL DATA

Minimum Useful Screen Dimensions (Maximum Assured)	
Height	5⅞ Inches
Width	7½ Inches
Diagonal	7⅞ Inches
Area	39 Sq. Inches
Bulb	C67½ Exp. 2 or Equivalent
Bulb Contact (Recessed Small Cavity Cap)	J1-21
Base	B6-185
Basing	7FA
Weight (Approx.)	2 Pounds

RATINGS

MAXIMUM RATINGS (Design Maximum Values)

Anode Voltage	20,000 Volts	dc
Grid No. 4 (Focusing Electrode)		
Voltage	−550 to +1100 Volts	dc
Grid No. 2 Voltage	550 Volts	dc

QUICK REFERENCE DATA

Television Picture Tube
8" Rectangular, All Glass
Electrostatic Focus
No Ion Trap
110° Magnetic Deflection
Gray Filter Glass
Aluminized Screen
External Conductive Coating
6.3 Volt, 0.30 Amp. Heater

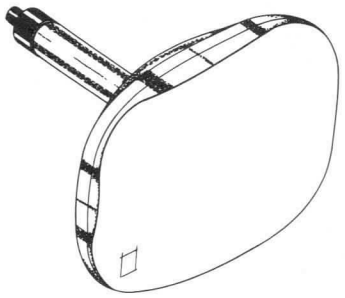

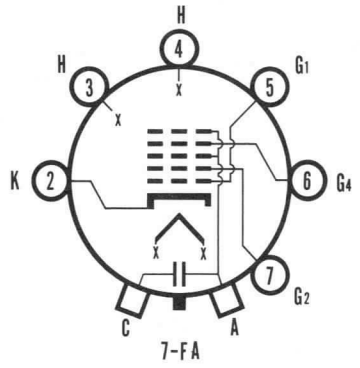

SYLVANIA
ELECTRONIC TUBES
A Division of
Sylvania Electric Products Inc.
PICTURE TUBE OPERATIONS
SENECA FALLS, NEW YORK
Prepared and Released By The
TECHNICAL PUBLICATIONS SECTION
EMPORIUM, PENNSYLVANIA
MARCH, 1960

File Under
TELEVISION PICTURE TUBES

MAXIMUM RATINGS (Design Maximum Values) (Cont'd.)

Grid No. 1 Voltage		
Negative Bias Value	155 Volts	dc
Negative Peak Value	220 Volts	
Positive Bias Value	0 Volts	dc
Positive Peak Value	2 Volts	
Peak Heater-Cathode Voltage		
Heater Negative with Respect to Cathode		
During Warm-up Period not to Exceed 15 Seconds	450 Volts	
After Equipment Warm-up Period	200 Volts	
Heater Positive with Respect to Cathode	200 Volts	

TYPICAL OPERATING CONDITIONS

Anode Voltage	16,000 Volts	dc
Grid No. 4 Voltage for Focus	0 to 400 Volts	dc
Grid No. 2 Voltage	300 Volts	dc
Grid No. 1 Voltage Required for Cutoff[3]	−35 to −72 Volts	dc

CIRCUIT VALUES

Grid No. 1 Circuit Resistance	1.5 Megohm Max.

NOTES:

1. *Heater Warm-up Time is defined as the time required for the voltage across the heater to reach 80% of the rated heater voltage after applying four (4) times rated heater voltage to a circuit consisting of the tube heater in series with a resistance equal to three (3) times the rated heater voltage divided by the rated heater current.*
2. *External conductive coating must be grounded.*
3. *Visual extinction of focused raster. Extinction of stationary focused spot will require that these values be about 5 volts more negative.*

WARNING:

X-ray radiation shielding may be necessary to protect against possible danger of personal injury from prolonged exposure at close range if this tube is operated at higher than the manufacturer's Maximum Rated Anode Voltage or 16,000 volts, whichever is less.

OUTLINE

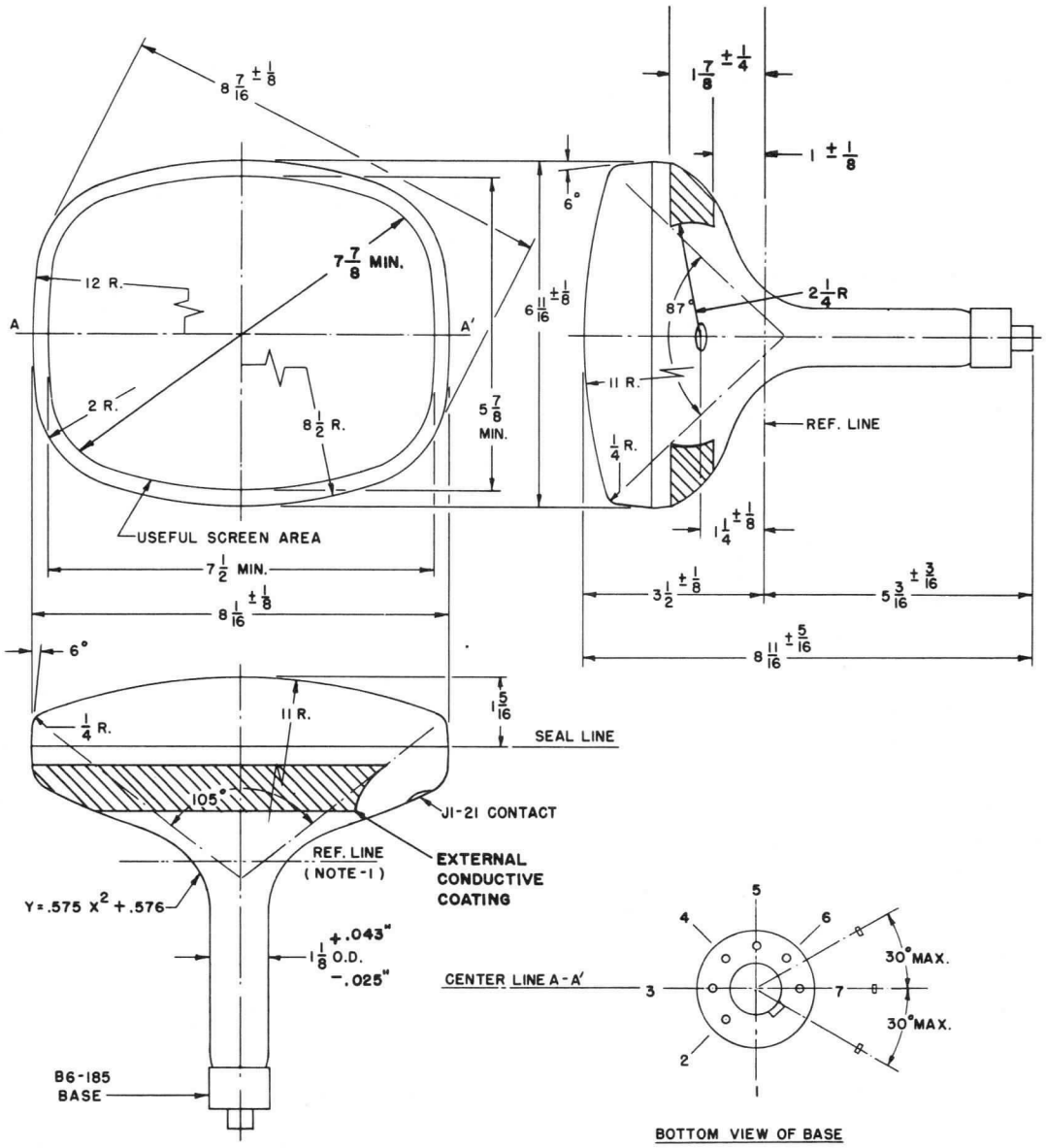

D60001

DIAGRAM NOTES:

1. *Reference line is determined by the plane C-C' of JEDEC No. 126 reference line gauge when the gauge is seated against the bulb.*
2. *Base Pin No. 7 aligns with horizontal centerline within 30° and is on same side as anode contact (J1-21).*
3. *Dimensions are in inches.*

SYLVANIA

engineering data service

SYLVANIA
12LP4
12LP4A

CHARACTERISTICS

GENERAL DATA

Focusing Method	Magnetic
Deflecting Method	Magnetic
Deflecting Angle (approx.)	54 Degrees
Phosphor	P4
Fluorescence	White
Persistence	Medium
Faceplate	Clear

ELECTRICAL DATA

Heater Voltage	6.3 Volts
Heater Current (approx.)	0.6 Ampere
Direct Interelectrode Capacitances (approx.)	
Cathode to All Other Electrodes	5 $\mu\mu$f
Grid No. 1 to All Other Electrodes	6 $\mu\mu$f
External Conductive Coating to Anode[1]	3000 $\mu\mu$f Max.
	750 $\mu\mu$f Min.
Ion Trap Magnet	External, Double Field Type

MECHANICAL DATA

Minimum Useful Screen Dimensions (Diameter)	11 Inches
Bulb Contact Recessed Small Cavity Cap)	J1-21
Base (Small Shell Duodecal 5-Pin)	B5-57
Basing	12N
Bulb Contact Aligns with Vacant Pin Position No. 3	±10 Degrees

RATINGS

MAXIMUM RATINGS (Design Center Values)

Anode Voltage	12,000 Volts dc
Grid No. 2 Voltage	410 Volts dc
Grid No. 1 Voltage	
Negative Bias Value	125 Volts dc
Positive Bias Value	0 Volts dc
Positive Peak Value	2 Volts
Heater Negative with Respect to Cathode	
During Warm-up Period Not to Exceed 15 Seconds	410 Volts dc
After Equipment Warm-up Period	140 Volts dc
Heater Positive with Respect to Cathode	140 Volts dc

RECOMMENDED OPERATING CONDITIONS

Anode Voltage	11,000 Volts dc
Grid No. 2 Voltage	250 Volts dc
Grid No. 1 Voltage Required for Cutoff[2]	−27 to −63 Volts dc
Focusing Coil Current (approx.)[3]	110 Ma dc
Ion Trap Magnet Strength (approx.)	35 Gausses

CIRCUIT VALUES

Grid No. 1 Circuit Resistance	1.5 Megohms Max.

NOTES:

1. *External conductive coating must be grounded.*
2. *Visual extinction of undeflected focused spot.*
3. *For RTMA focusing coil 106 or equivalent three and one quarter inches from reference line, bias adjusted to 20 foot lamberts on a 7½ x 10 inch picture area sharply focused at center of screen.*

QUICK REFERENCE DATA

Television Picture Tube
12" Direct Viewed
Round Glass Type
Magnetic Deflection
Magnetic Focus
Double Field Ion Trap
External Conductive Coating
(12LP4A has gray filter glass faceplate)

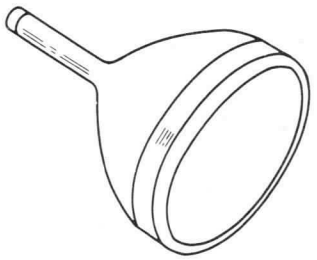

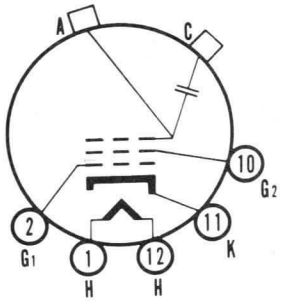

12-N

SYLVANIA ELECTRIC PRODUCTS INC.

Prepared and Released By The TECHNICAL PUBLICATIONS SECTION EMPORIUM, PENNSYLVANIA

JULY 1953

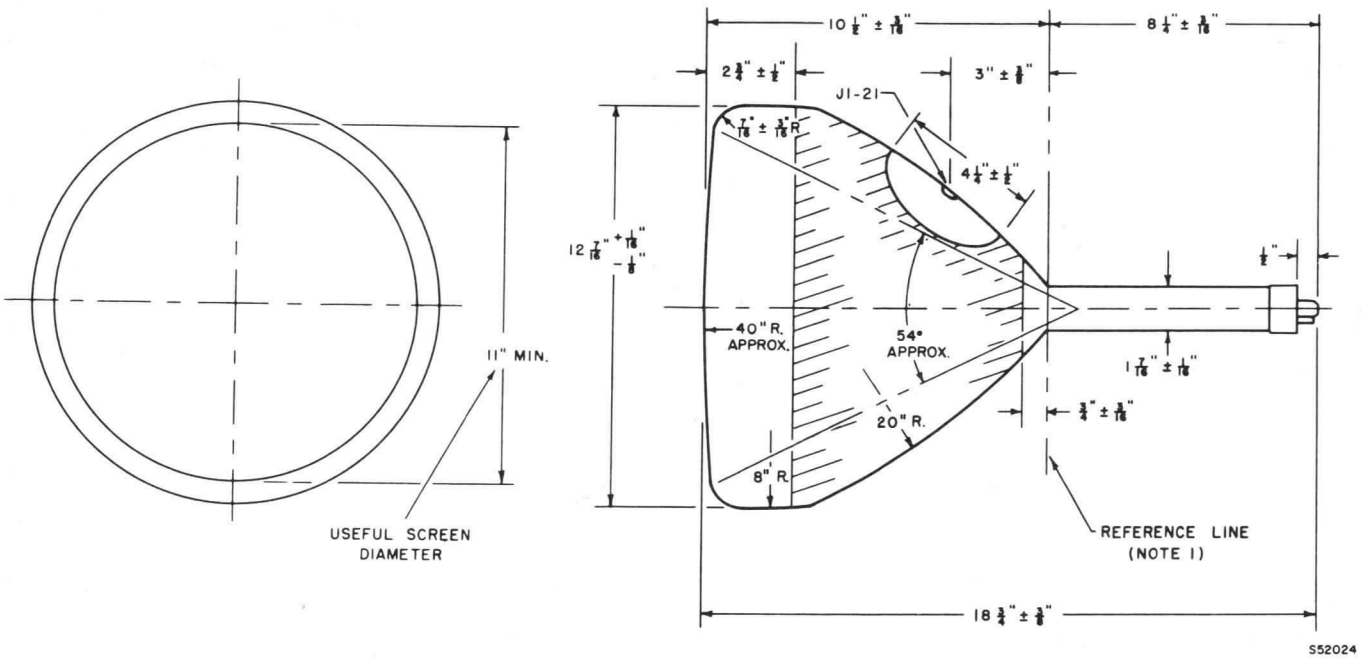

DIAGRAM NOTES:

1. *Reference line is determined by the plane of the upper edge of the reference line gauge (RTMA No. 112) when the gauge is resting on the glass cone.*

12LP4A

The Sylvania Type 12LP4A is identical to Type 12LP4 except for having the gray filter glass faceplate.

WARNING:

X-ray radiation shielding may be necessary to protect against possible danger of personal injury from prolonged exposure at close range if this tube is operated at higher than the manufacturer's Maximum Rated Anode Voltage or 16,000 volts, whichever is less.

SYLVANIA

engineering data service

SYLVANIA
14QP4
14QP4A

CHARACTERISTICS

GENERAL DATA

Focusing Method	Electrostatic
Deflecting Method	Magnetic
Deflection Angles (approx.)	
Horizontal	65 Degrees
Diagonal	70 Degrees
Phosphor	P4
Fluorescence	White
Persistence	Short to Medium
Faceplate	Gray Filter Glass
Light Transmittance (approx.)	76 Percent

ELECTRICAL DATA

Heater Voltage	6.3 Volts	
Heater Current	0.6±5% Ampere	
Heater Warm-up Time[1]	11 Seconds	
Direct Interelectrode Capacitances (approx.)		
Cathode to All Other Electrodes	5 μμf	
Grid No. 1 to All Other Electrodes	6 μμf	
External Conductive Coating to Anode[2]	900 μμf	Max.
	600 μμf	Min.

Ion Trap Magnet External, Single Field Type

MECHANICAL DATA

Minimum Useful Screen Dimensions (maximum assured)	11½ x 8⅝ Inches
Minimum Useful Screen Area	96 Sq. Inches
Bulb Contact (Recessed Small Cavity Cap)	J1-21
Base (Small Shell Duodecal 6-Pin)	B6-63
Basing	12 L

RATINGS

MAXIMUM RATINGS (Absolute Maximum Values)

Anode Voltage	12,100 Volts	DC
Grid No. 4 Voltage (Focusing Electrode)	−550 to + 1100 Volts	DC
Grid No. 2 Voltage	550 Volts	DC
Grid No. 1 Voltage		
Negative Bias Value	155 Volts	DC
Negative Peak Value	220 Volts	
Positive Bias Value	0 Volts	DC
Positive Peak Value	2 Volts	
Peak Heater-Cathode Voltage		
Heater Negative with Respect to Cathode		
During Warm-up Period not to Exceed 15 Seconds	450 Volts	
After Equipment Warm-up Period	200 Volts	
Heater Positive with Respect to Cathode	200 Volts	

TYPICAL OPERATING CONDITIONS

Anode Voltage	9,000 Volts	DC
Grid No. 4 Voltage for Focus	−50 to +250 Volts	DC
Grid No. 2 Voltage	250 Volts	
Grid No. 1 Voltage Required for Cutoff[3]	−24 to −64 Volts	DC
Ion Trap Magnet Current (Average)[4]	24 Ma	DC
Field Strength of PM Ion Trap Magnet[5]	24 Gausses	Min.

CIRCUIT VALUES

Grid No. 1 Circuit Resistance	1.5 Megohms	Max.

QUICK REFERENCE DATA

Television Picture Tube
14" Direct Viewed
Rectangular Glass Type
Spherical Faceplate
Gray Filter Glass
Magnetic Deflection
Electrostatic Focus
Single Field Ion Trap
External Conductive Coating
14QP4A has Aluminized Screen

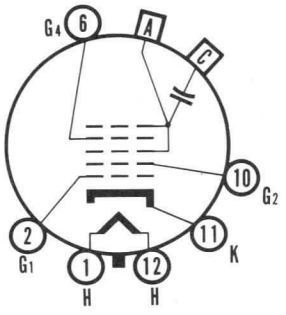

12-L

SYLVANIA ELECTRIC PRODUCTS INC.

RADIO TUBE DIVISION
EMPORIUM, PA.

Prepared and Released By The
TECHNICAL PUBLICATIONS SECTION
EMPORIUM, PENNSYLVANIA

JULY 1956

NOTES:

1. *Heater Warm-up Time is the time required for the voltage across the heater terminals to increase to 5.0 volts in the JETEC test circuit, with E = 25 volts and series R = 31.5 ohms.*
2. *External conductive coating must be grounded.*
3. *Visual extinction of raster.*
4. *For JETEC Ion Trap Magnet No. 117.*
5. *For typical PM ion trap magnet with field strength tolerance of ±3 gausses.*

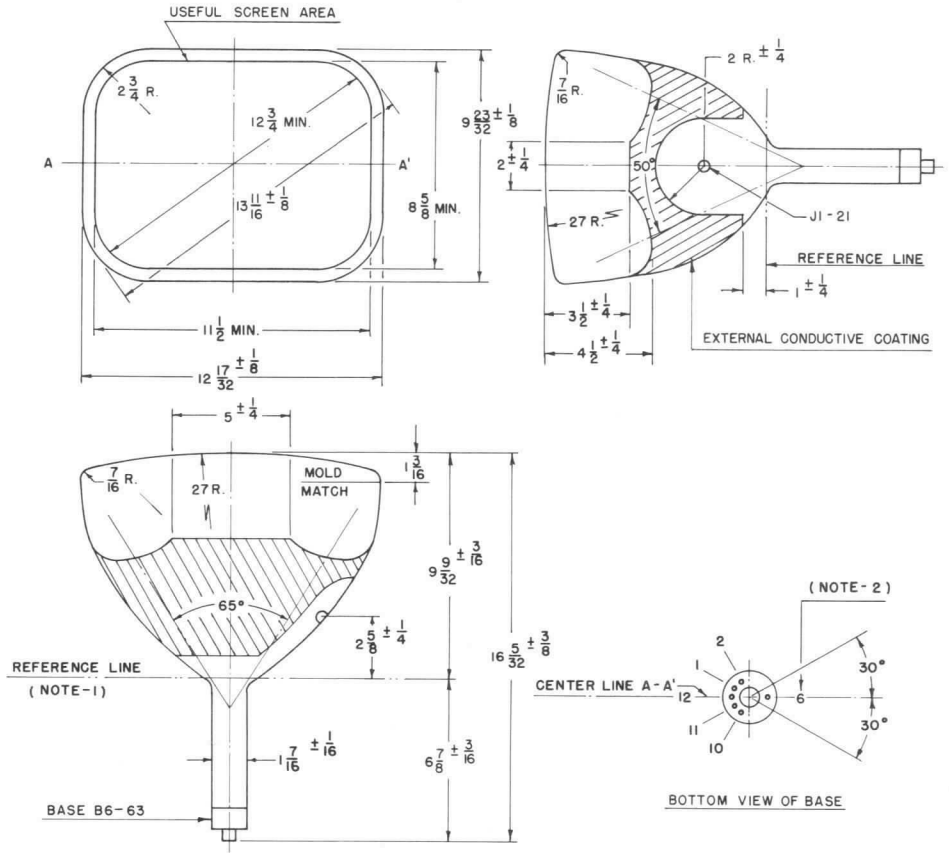

DIAGRAM NOTES:

1. *Reference line is determined by the plane C-C' of the JETEC No. 110 reference line gauge when the gauge is resting on the tube cone.*
2. *Anode contact aligns with Pin No. 6 ±30 degrees.*
3. *All dimensions are in inches.*

14QP4A

The Sylvania Type 14QP4A is identical to Type 14QP4 except it has an aluminized screen.

WARNING:

X-ray radiation shielding may be necessary to protect against possible danger of personal injury from prolonged exposure at close range if this tube is operated at higher than the manufacturer's Maximum Rated Anode Voltage or 16,000 volts, whichever is less.

CHARACTERISTICS

GENERAL DATA

Focusing Method	Electrostatic
Deflection Method	Magnetic
Deflection Angles (approx.)	
Horizontal	85 Degrees
Diagonal	90 Degrees
Phosphor	
14RP4	P4
14RP4A	Aluminized P4
Fluorescence	White
Persistence	Short to Medium
Faceplate	Gray Filter Glass
Light Transmittance (approx.)	78 %

ELECTRICAL DATA

Heater Voltage	6.3 Volts	
Heater Current	0.6 ± 5% Ampere	
Heater Warm-up Time[1]	11 Seconds	
Direct Interelectrode Capacitances (approx.)		
Cathode to All Other Electrodes	5 μμf	
Grid No. 1 to All Other Electrodes	6 μμf	
External Conductive Coating to Anode[2]	1200 μμf	Max.
	800 μμf	Min.
Ion Trap Magnet	External, Single Field Type	

MECHANICAL DATA

Minimum Useful Screen Dimensions (Maximum Assured)	$12\frac{1}{16}$ x $9\frac{1}{2}$ Inches
Minimum Useful Screen Area	104 Sq. Inches
Bulb Contact (Recessed Small Cavity Cap)	J1-21
Base (Small Shell Duodecal 6-Pin)	B6-63
Basing	12L
Weight (approx.)	8.5 Pounds

RATINGS

MAXIMUM RATINGS (Absolute Maximum Values)

Anode Voltage	15,400 Volts	dc
Grid No. 4 Voltage (Focusing Electrode)	−550 to +550 Volts	dc
Grid No. 2 Voltage	440 Volts	dc
Grid No. 1 Voltage		
Negative Bias Value	120 Volts	dc
Negative Peak Value	175 Volts	
Positive Bias Value	0 Volts	dc
Positive Peak Value	2 Volts	
Peak Heater-Cathode Voltage		
Heater Negative with Respect to Cathode	200 Volts	
Heater Positive with Respect to Cathode	200 Volts	

TYPICAL OPERATING CONDITIONS

Anode Voltage	12,000 Volts	dc
Grid No. 4 Voltage for Focus	−50 to +350 Volts	dc
Grid No. 2 Voltage	300 Volts	dc
Grid No. 1 Voltage Required for Cutoff[3]	−26 to −70 Volts	dc
Ion Trap Magnet Current (Average)[4]	35 Ma	dc
Field Strength of PM Ion Trap Magnet[5]	40 Gausses	Min.

QUICK REFERENCE DATA

Television Picture Tube
14" Direct Viewed
Rectangular Glass Type
Spherical Faceplate
Gray Filter Glass
Magnetic Deflection
Electrostatic Focus
Single Field Ion Trap
External Conductive Coating
14RP4A has Aluminized Screen

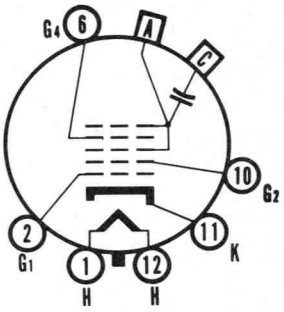

12-L

SYLVANIA ELECTRIC PRODUCTS INC.
TELEVISION PICTURE TUBE DIVISION
SENECA FALLS, NEW YORK

Prepared and Released By The
TECHNICAL PUBLICATIONS SECTION
EMPORIUM, PENNSYLVANIA
JUNE, 1957

CIRCUIT VALUES

Grid No. 1 Circuit Resistance	1.5 Megohms Max.

NOTES:

1. *Heater warm-up time is the time required for the voltage across the heater terminals to increase to 5.0 volts in the JETEC test circuit, with E = 25 volts and series R = 31.5 ohms.*
2. *External conductive coating must be grounded.*
3. *Visual extinction of focused raster. Extinction of stationary focused spot will require that these values be about 5 volts more negative.*
4. *For JETEC Ion Trap Magnet No. 117 with pole pieces centered over Grid No. 2 on mount, and rotated for maximum brightness.*
5. *For typical PM ion trap magnet with field strength tolerence of ±3 gausses.*

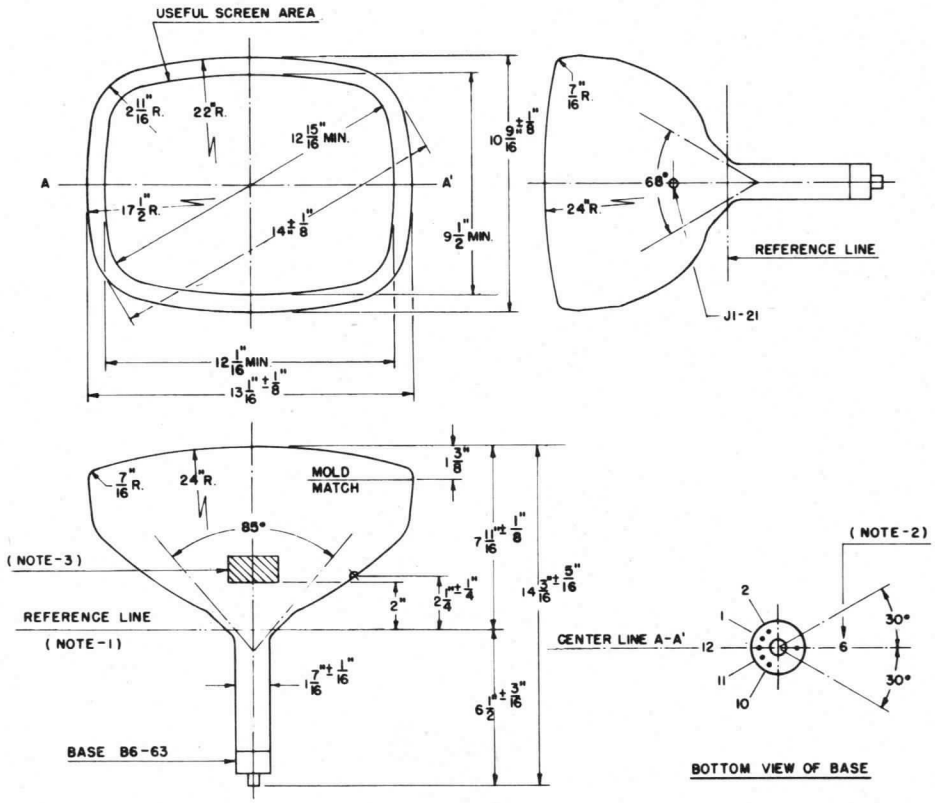

DIAGRAM NOTES:

1. *Reference line is determined by the plane C-C' of the reference line gauge (JETEC No. 116) when the gauge is resting on the glass cone.*
2. *Base pin No. 6 aligns with anode contact terminal J1-21 within 30 degrees.*
3. *Contact area 2" x 2" for external conductive coating, located 90 degrees counterclockwise from anode contact as viewed from base end of tube.*

WARNING:

X-ray radiation shielding may be necessary to protect against possible danger of personal injury from prolonged exposure at close range if this tube is operated at higher than the manufacturer's Maximum Rated Anode Voltage or 16,000 volts, whichever is less.

A Technical Publication of

SYLVANIA ELECTRIC
PRODUCTS INC.

EMPORIUM, PA.

CHARACTERISTICS

GENERAL DATA

Focusing Method	Electrostatic
Deflection Method	Magnetic
Deflection Angles (approx.)	
Horizontal	79 Degrees
Diagonal	85 Degrees
Phosphor	Aluminized P4
Fluorescence	White
Persistence	Short to Medium
Faceplate	Gray Filter Glass
Light Transmittance (approx.)	75 Percent

ELECTRICAL DATA

Heater Voltage	6.3 Volts
Heater Current	0.6 ±5% Ampere
Heater Warm-up Time[1]	11 Seconds
Direct Interelectrode Capacitances (approx.)	
Cathode to All Other Electrodes	5 μμf
Grid No. 1 to All Other Electrodes	6 μμf
External Conductive Coating to Anode[2]	1200 μμf Max.
	900 μμf Min.
Ion Trap Magnet	External, Single Field Type

MECHANICAL DATA

Minimum Useful Screen Dimensions (Maximum Assured)	12 x $9\frac{7}{16}$ Inches
Minimum Useful Screen Area	103 Sq. Inches
Bulb Contact (Recessed Small Cavity Cap)	J1-21
Base (Small Shell Duodecal 6-Pin)	B6-63
Basing	12L

RATINGS

MAXIMUM RATINGS (Absolute Maximum Values)

Anode Voltage	15,400 Volts dc
Grid No. 4 Voltage (Focusing Electrode)	−550 to +1100 Volts dc
Grid No. 2 Voltage	550 Volts dc
Grid No. 1 Voltage	
Negative Bias Value	154 Volts dc
Negative Peak Value	220 Volts
Positive Bias Value	0 Volts dc
Positive Peak Value	2 Volts
Peak Heater-Cathode Voltage	
Heater Negative with Respect to Cathode	
During Warm-up Period not to Exceed 15 Seconds	450 Volts
After Equipment Warm-up Period	200 Volts
Heater Positive with Respect to Cathode	200 Volts

TYPICAL OPERATING CONDITIONS

Anode Voltage	12,000 Volts dc
Grid No. 4. Voltage for Focus	−48 to +264 Volts dc
Grid No. 2 Voltage	300 Volts dc
Grid No. 1 Voltage Required for Cutoff[3]	−28 to −72 Volts dc
Ion Trap Magnet Current (Average)[4]	26 Ma dc
Field Strength of PM Ion Trap Magnet[5]	28 Gausses Min.

CIRCUIT VALUES

Grid No. 1 Circuit Resistance	1.5 Megohms Max.

NOTES:

(Continued on Page 2)

1. *Heater warm-up time is the time required for the voltage across the heater terminals to increase to 5.0 volts in the JETEC test circuit, with E = 25 volts and series R = 31.5 ohms.*

QUICK REFERENCE DATA

Television Picture Tube
14″ Direct Viewed
Rectangular Glass Type
Spherical Faceplate
Gray Filter Glass
Magnetic Deflection
Electrostatic Focus
Single Field Ion Trap
External Conductive Coating
Aluminized Screen

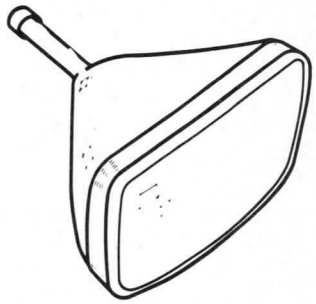

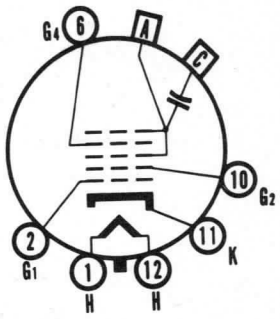

12-L

SYLVANIA ELECTRIC PRODUCTS INC.

TELEVISION PICTURE TUBE DIVISION

SENECA FALLS, NEW YORK

Prepared and Released By The TECHNICAL PUBLICATIONS SECTION EMPORIUM, PENNSYLVANIA

APRIL 1956

2. *External conductive coating must be grounded.*
3. *Visual extinction of focused raster. Extinction of stationary focused spot will require that these values be about 5 volts more negative.*
4. *For JETEC Ion Trap Magnet No. 117 with pole pieces centered over Grid No. 2 on mount, and rotated for maximum brightness.*
5. *For typical PM ion trap magnet with field strength tolerance of ±3 gausses.*

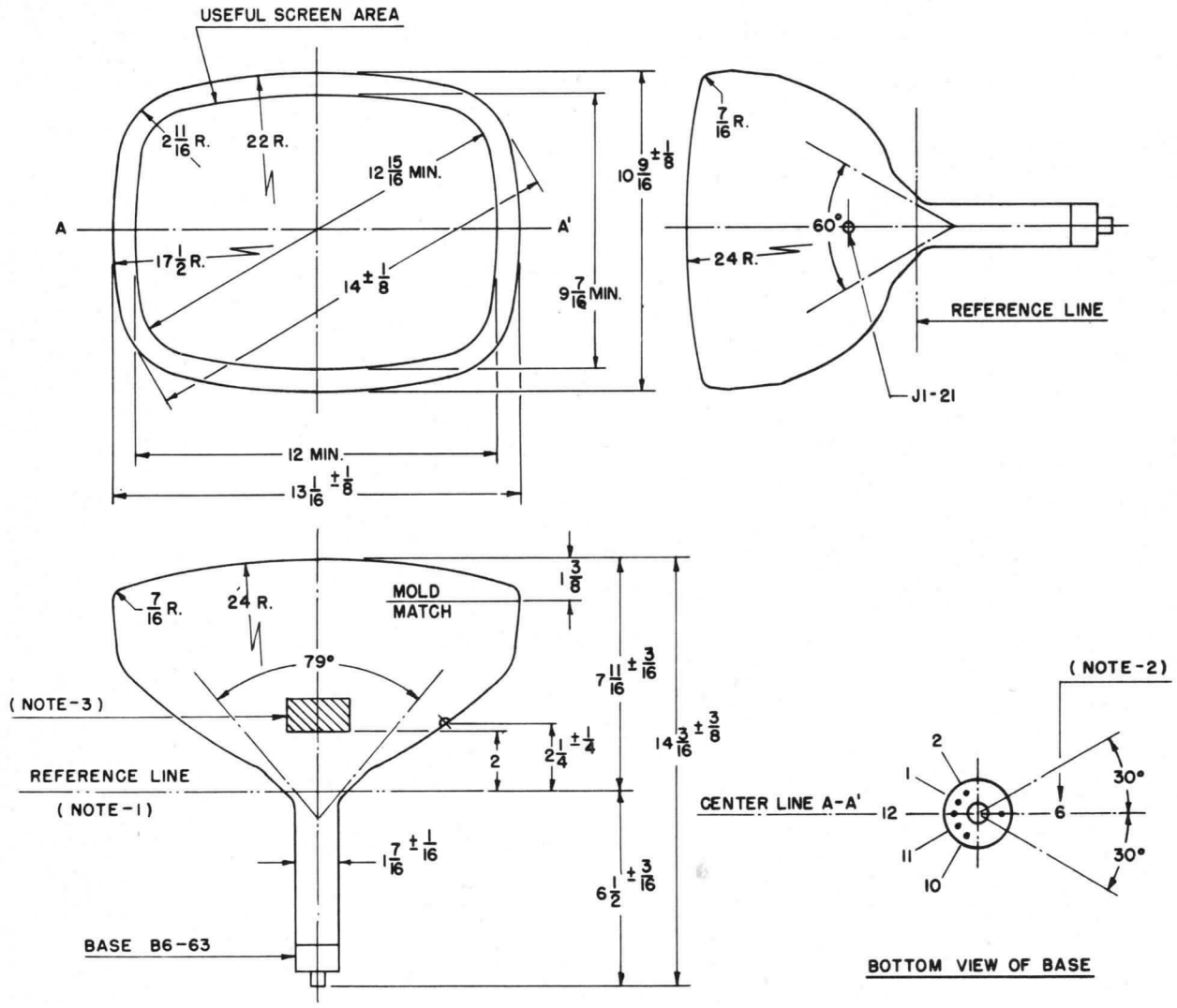

DIAGRAM NOTES:

1. *Reference line is determined by the plane C-C' of the reference line gauge (JETEC No. 116) when the gauge is resting on the glass cone.*
2. *Base pin No. 6 aligns with anode contact terminal J1-21 within 30 degrees.*
3. *Contact area for external conductive coating, 2" x 2", located 90 degrees counterclockwise from anode contact as viewed from base end of tube.*
4. *Dimensions are in inches.*

WARNING:

X-ray radiation shielding may be necessary to protect against possible danger of personal injury from prolonged exposure at close range if this tube is operated at higher than the manufacturer's Maximum Rated Anode Voltage or 16,000 volts, whichever is less.

SYLVANIA

engineering data service

SYLVANIA
14XP4
14XP4A

CHARACTERISTICS

GENERAL DATA

Focusing Method	Electrostatic
Deflection Method	Magnetic
Deflection Angle (approx.)	
Horizontal	79 Degrees
Diagonal	85 Degrees
Phosphor	
14XP4	P4
14XP4A	Aluminized P4
Fluorescence	White
Persistence	Short to Medium
Faceplate	Gray Filter Glass
Light Transmittance (approx.)	78 Percent

ELECTRICAL DATA

Heater Voltage	6.3 Volts	
Heater Current	0.450 ±5% Ampere	
Heater Warm-up Time[1]	11 Seconds	
Direct Interelectrode Capacitances (approx.)		
Cathode to All Other Electrodes	5 μμf	
Grid No. 1 to All Other Electrodes	6 μμf	
External Conductive Coating to Anode[2]	1500 μμf	Max.
	1100 μμf	Min.
Ion Trap Magnet	External, Single Field Type	

MECHANICAL DATA

Minimum Useful Screen Dimensions (Maximum Assured)	$12\frac{1}{16}$ x $9\frac{1}{2}$ Inches
Minimum Useful Screen Area	104 Sq. Inches
Bulb Contact (Recessed Small Cavity Cap)	J1-21
Base (Small Shell Duodecal 6-Pin)	B6-63
Basing	12L

RATINGS

MAXIMUM RATINGS (Absolute Maximum Values)

Anode Voltage	16,500 Volts dc
Grid No. 4 Voltage (Focusing Electrode)	−550 to +1100 Volts dc
Grid No. 2 Voltage	440 Volts dc
Grid No. 1 Voltage	
Negative Bias Value	140 Volts dc
Negative Peak Value	180 Volts
Positive Bias Value	0 Volts dc
Positive Peak Value	2 Volts
Peak Heater-Cathode Voltage	
Heater Negative with Respect to Cathode	
During Warm-up Period not to Exceed 15 Seconds	450 Volts
After Equipment Warm-up Period	200 Volts
Heater Positive with Respect to Cathode	200 Volts

TYPICAL OPERATING CONDITIONS

Anode Voltage	12,000 Volts dc
Grid No. 4 Voltage for Focus	−50 to +350 Volts dc
Grid No. 2 Voltage	300 Volts dc
Grid No. 1 Voltage Required for Cutoff[3]	−28 to −72 Volts dc
Ion Trap Magnet Current (Average)[4]	28 Ma dc
Field Strength of PM Ion Trap Magnet[5]	30 Gausses Min.

CIRCUIT VALUES

Grid No. 1 Circuit Resistance	1.5 Megohms Max.

QUICK REFERENCE DATA

Television Picture Tube
14" Direct Viewed
Rectangular Glass Type
Spherical Faceplate
Gray Filter Glass
Magnetic Deflection
Electrostatic Focus
Single Field Ion Trap
External Conductive Coating
450 Ma Heater Current
14XP4A has Aluminized Screen

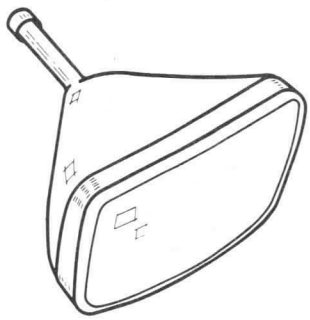

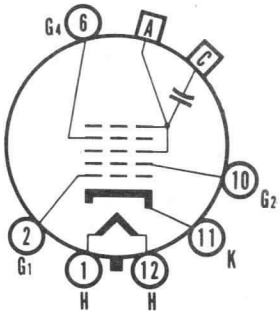

12-L

SYLVANIA ELECTRIC PRODUCTS INC.
TELEVISION PICTURE TUBE DIVISION
SENECA FALLS, NEW YORK

Prepared and Released By The TECHNICAL PUBLICATIONS SECTION EMPORIUM, PENNSYLVANIA
DEC. 1956

NOTES:

1. *Heater warm-up time is the time required for the voltage across the heater terminals to increase to 5.0 volts in the JETEC test circuit, with E = 25 volts and series R = 42 ohms.*
2. *External conductive coating must be grounded.*
3. *Visual extinction of focused raster. Extinction of stationary focused spot will require that these values be about 5 volts more negative.*
4. *For JETEC Ion Trap Magnet No. 117 with pole pieces centered over Grid No. 2 on mount, and rotated for maximum brightness.*
5. *For typcial PM ion trap magnet with field strength tolerance of ±3 gausses.*

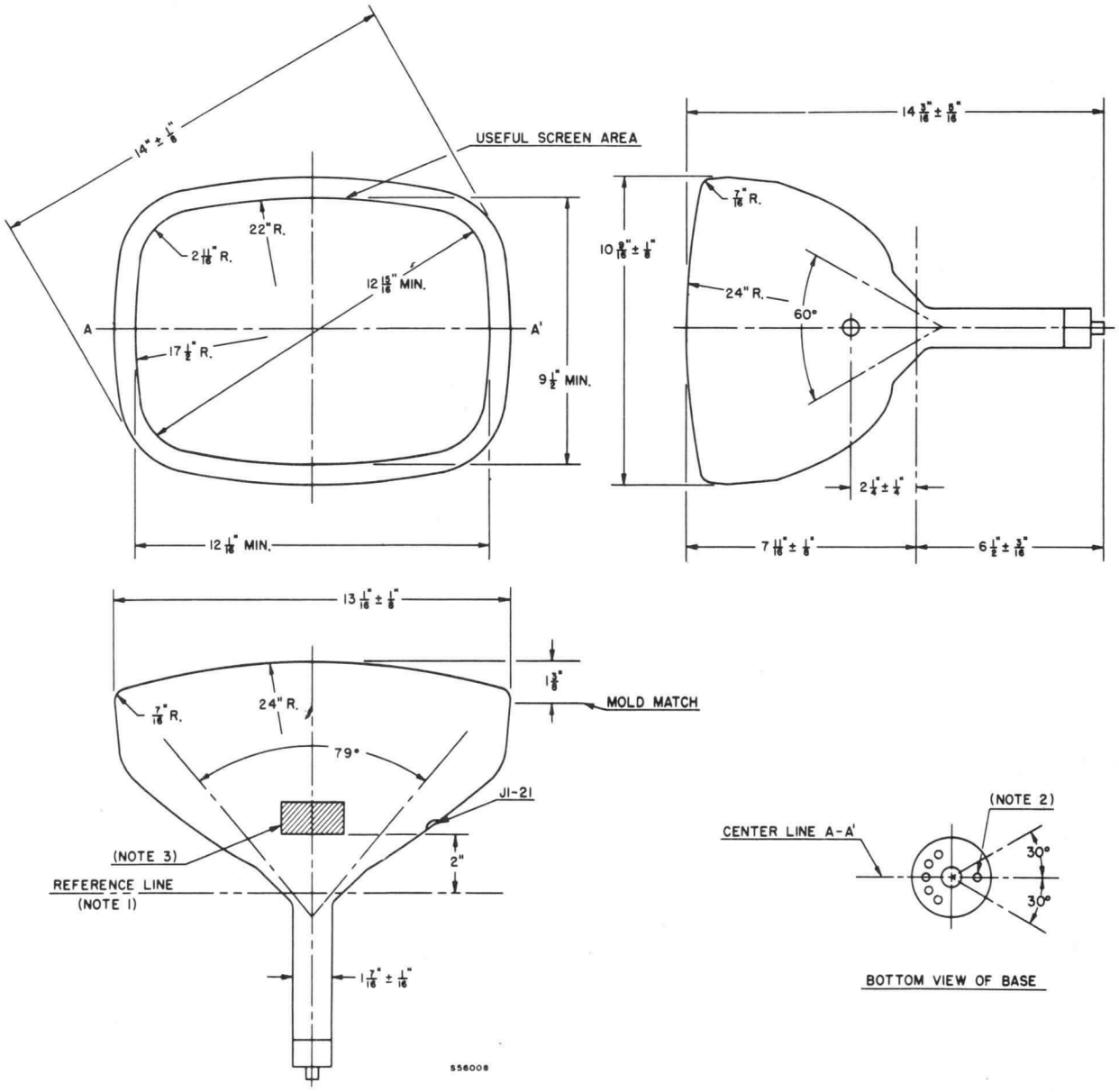

DIAGRAM NOTES:

1. *Reference line is determined by the plane C-C' of the reference line gauge (JETEC No. 116) when the gauge is resting on the glass cone.*
2. *Base pin No. 6 aligns with anode contact terminal J1-21 within 30 degrees.*
3. *Contact area for external conductive coating, 2" x 2", located 90 degrees counterclockwise from anode contact as viewed from base end of tube.*
4. *Dimensions are in inches.*

14XP4A

The Sylvania Type 14XP4A is identical to Type 14XP4 except it has an aluminized screen.

WARNING:

X-ray radiation shielding may be necessary to protect against possible danger of personal injury from prolonged exposure at close range if this tube is operated at higher than the manufacturer's Maximum Rated Anode Voltage or 16,000 volts, whichever is less.

CHARACTERISTICS

GENERAL DATA

Focusing Method	Electrostatic
Deflection Method	Magnetic
Deflection Angles (Approx.)	
Horizontal	103 Degrees
Diagonal	114 Degrees
Vertical	88 Degrees
Phosphor	Aluminized P4
Fluorescence	White
Persistence	Medium Short
Faceplate	Bonded Shield
(Gray Filter Glass Safety Plate Laminated Directly to Face of Tube)	
Light Transmittance of Faceplate Assembly (Approx.)	60 Percent
Type 16AQP4 has External Surface of Safety Plate Treated to Reduce Specular Reflection	

ELECTRICAL DATA

Heater Voltage	6.3 Volts	
Heater Current	0.60 ± 5 % Ampere	
Heater Warm-up Time[1]	11 Seconds	
Direct Interelectrode Capacitances (Approx.)		
Cathode to All Other Electrodes	5 pf	
Grid No. 1 to All Other Electrodes	6 pf	
External Conductive Coating to Anode[2]	1200 pf	Max.
	800 pf	Min.

MECHANICAL DATA

Minimum Useful Screen Dimensions (Maximum Assured)	
Height	10 ¼ Inches
Width	12 5/16 Inches
Diagonal	14 7/8 Inches
Area	125 Sq. Inches
Neck Length	4 1/8 ± 1/8 Inches
Overall Length	10 7/16 ± 5/16 Inches
Bulb	J125A
Safety Plate (16ANP4)	FP125A
Safety Plate (16AQP4)	Same, Anti-Reflection Treated
Bulb Contact (Recessed Small Cavity Cap)	J1-21
Base	B7-208
Basing	8HR
Weight (Approx.)	9 ½ Pounds

RATINGS

MAXIMUM RATINGS (Design Maximum Values)

Grid Drive Service[3]

Anode Voltage		
Maximum	18,000 Volts	dc
Minimum	10,000 Volts	dc
Grid No. 4 Voltage (Focusing Electrode)	-550 to +1100 Volts	dc
Grid No. 2 Voltage	550 Volts	dc
Grid No. 1 Voltage		
Negative Bias Value	155 Volts	dc
Negative Peak Value	220 Volts	
Positive Bias Value	0 Volts	dc
Positive Peak Value	2 Volts	
Peak Heater-Cathode Voltage		
Heater Negative with Respect to Cathode		
During Warm-up Period Not to Exceed 15 Secs.	450 Volts	
After Equipment Warm-up Period	200 Volts	
Heater Positive with Respect to Cathode	200 Volts	

QUICK REFERENCE DATA

Television Picture Tube
16″ Direct Viewed
Rectangular Glass Type
Spherical Faceplate
Bonded Shield
Gray Filter Glass
Aluminized Screen
Electrostatic Focus
114° Magnetic Deflection
No Ion Trap
External Conductive Coating

16AQP4—Anti-Reflection Treated

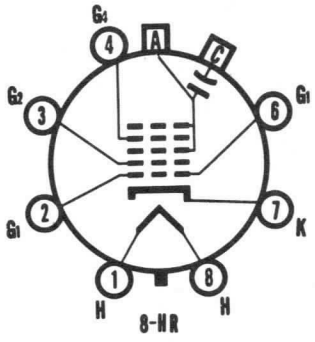

SYLVANIA
ELECTRONIC TUBES

A Division of
Sylvania Electric Products Inc.

PICTURE TUBE
OPERATIONS

SENECA FALLS, NEW YORK

Prepared and Released By The
TECHNICAL PUBLICATIONS SECTION
EMPORIUM, PENNSYLVANIA

JUNE, 1963

File Under
TELEVISION PICTURE TUBES

MAXIMUM RATINGS (Design Maximum Values) (Continued)

Cathode Drive Service[4]

Anode Voltage		
Maximum	18,000 Volts	dc
Minimum	10,000 Volts	dc
Grid No. 4 Voltage (Focusing Electrode)	−400 to +1250 Volts	dc
Grid No. 2 Voltage	700 Volts	dc
Cathode Voltage		
Positive Bias Value	155 Volts	dc
Positive Peak Value	220 Volts	
Negative Bias Value	0 Volts	dc
Negative Peak Value	2 Volts	
Peak Heater-Cathode Voltage		
Heater Negative with Respect to Cathode		
During Warm-up Period Not to Exceed 15 Seconds	450 Volts	
After Equipment Warm-up Period	200 Volts	
Heater Positive with Respect to Cathode	200 Volts	

TYPICAL OPERATING CONDITIONS

Grid Drive Service[3]

Anode Voltage	14,000 Volts	dc
Grid No. 4 Voltage for Focus	0 to 400 Volts	dc
Grid No. 2 Voltage	300 Volts	dc
Grid No. 1 Voltage Required for Cutoff[5]	−33 to −70 Volts	dc

Cathode Drive Service[4]

Anode Voltage	14,000 Volts	dc
Grid No. 4 Voltage for Focus	0 to 400 Volts	dc
Grid No. 2 Voltage	300 Volts	dc
Cathode Voltage Required for Cutoff[5]	+31 to +57 Volts	dc

CIRCUIT VALUES

Grid No. 1 Circuit Resistance	1.5 Megohms Max.

NOTES:

1. *Heater warm-up time is defined as the time required for the voltage across the heater to reach 80 % of the rated heater voltage after applying four (4) times rated heater voltage to a circuit consisting of the tube heater in series with a resistance equal to three (3) times the rated heater voltage divided by the rated heater current.*
2. *External conductive coating must be grounded.*
3. *Voltages are positive with respect to cathode unless indicated otherwise.*
4. *Voltages are positive with respect to Grid No. 1 unless indicated otherwise.*
5. *Visual extinction of focused raster. For cutoff of the undeflected focused spot, the absolute value of the bias between cathode and grid will increase by about 5 volts.*

WARNING:

X-ray radiation shielding may be necessary to protect against possible danger of personal injury from prolonged exposure at close range if this tube is operated at higher than the manufacturer's Maximum Rated Anode Voltage or 16,000 volts, whichever is less.

OUTLINE

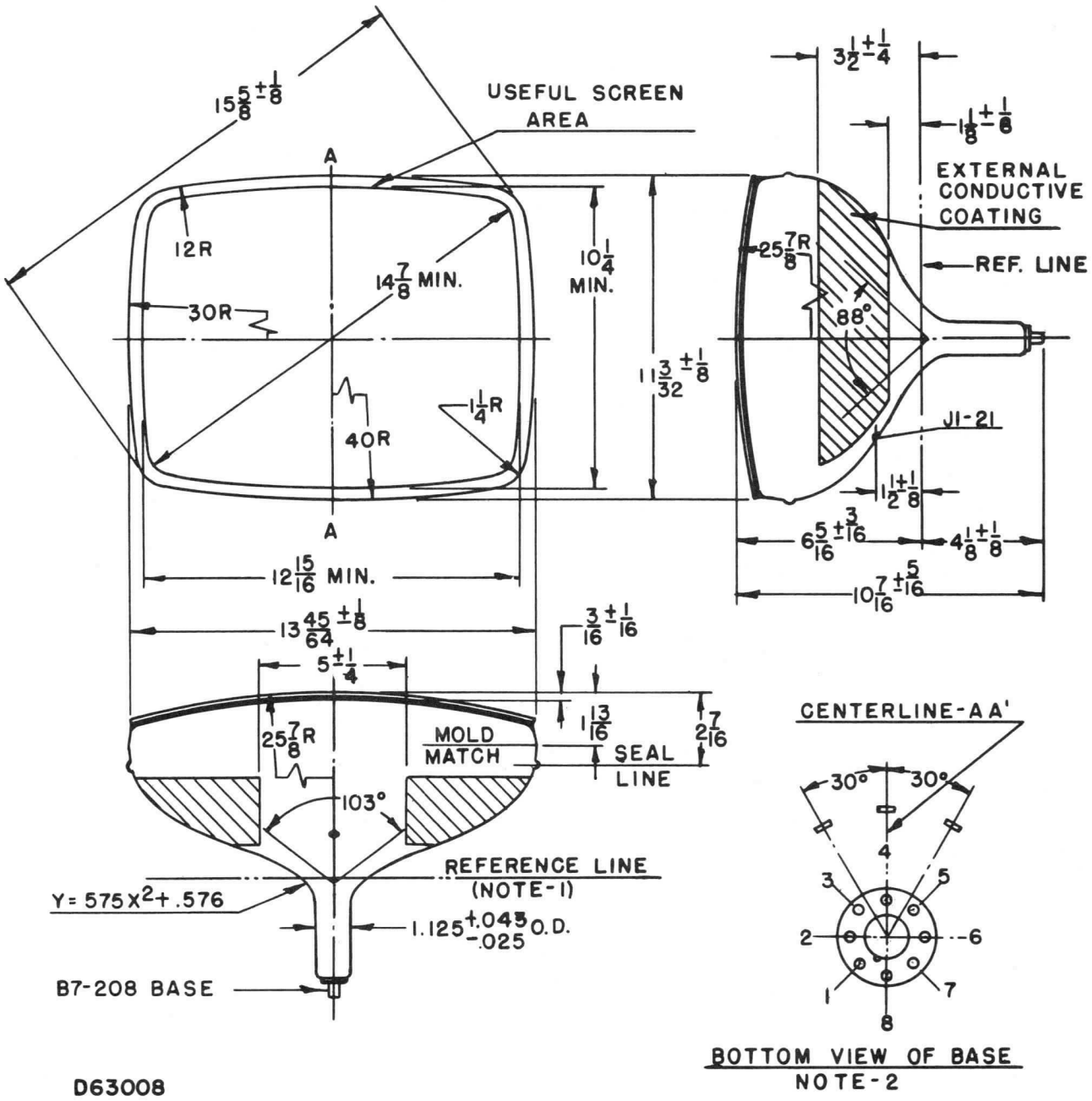

DIAGRAM NOTES:

1. *Reference line is determined by plane C-C' of JEDEC No. 126 Reference Line Gauge when the gauge is seated against the bulb.*
2. *Base pin No. 4 aligns with vertical centerline (A-A') within 30° and is on same side as anode contact (J1-21).*

CHARACTERISTICS

GENERAL DATA

Focusing Method	Electrostatic
Deflection Method	Magnetic
Deflection Angles (Approx.)	
Horizontal	103 Degrees
Diagonal	114 Degrees
Vertical	88 Degrees
Phosphor	Aluminized P4
Fluorescence	White
Persistence	Medium Short
Faceplate	Bonded Shield
(Gray Filter Glass Safety Plate Laminated Directly to Face of Tube)	
Light Transmittance of Faceplate Assembly (Approx.)	60 Percent

ELECTRICAL DATA

Heater Voltage	6.3 Volts	
Heater Current	0.30 ± 5 % Ampere	
Heater Warm-up Time[1]	11 Seconds	
Direct Interelectrode Capacitances (Approx.)		
Cathode to All Other Electrodes	5 pf	
Grid No. 1 to All Other Electrodes	6 pf	
External Conductive Coating to Anode[2]	1200 pf	Max.
	800 pf	Min.

MECHANICAL DATA

Minimum Useful Screen Dimensions (Maximum Assured)		
Height	10 1/4 Inches	
Width	12 15/16 Inches	
Diagonal	14 7/8 Inches	
Minimum Useful Screen Area	125 Sq. Inches	
Neck Length	4 3/8 ± 1/8 Inches	
Overall Length	10 11/16 ± 5/16 Inches	
Bulb	J125A	
Safety Plate	FP125A	
Bulb Contact (Recessed Small Cavity Cap)	J1-21	
Base	B7-208	
Basing	8HR	
Weight (Approx.)	9 ½ Pounds	

RATINGS

MAXIMUM RATINGS (Design Maximum Values)

Cathode Drive Service[3]

Anode Voltage		
Maximum	18,000 Volts	dc
Minimum	10,000 Volts	dc
Grid No. 4 Voltage (Focusing Electrode)	−400 to +1250 Volts	dc
Grid No. 2 Voltage	70 Volts	dc
Cathode Voltage		
Positive Bias Value	100 Volts	dc
Positive Peak Value	150 Volts	
Negative Bias Value	0 Volt	dc
Negative Peak Value	2 Volts	
Peak Heater-Cathode Voltage		
Heater Negative with Respect to Cathode During Warm-up Period Not to Exceed 15 Seconds	450 Volts	
After Equipment Warm-up Period	200 Volts	
Heater Positive with Respect to Cathode	200 Volts	

QUICK REFERENCE DATA

Television Picture Tube
16″ Direct Viewed
Rectangular Glass Type
Bonded Shield
Gray Filter Glass
Aluminized Screen
Electrostatic Focus
Low Grid No. 2 Voltage
114° Magnetic Deflection
No Ion Trap
External Conductive Coating
6.3 Volt/300 Ma Heater

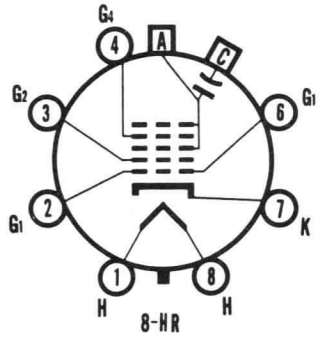

SYLVANIA
ELECTRONIC TUBES

A Division of
Sylvania Electric Products Inc.

PICTURE TUBE
OPERATIONS

SENECA FALLS, NEW YORK

Prepared and Released By The
TECHNICAL PUBLICATIONS SECTION
EMPORIUM, PENNSYLVANIA

DECEMBER, 1963

File Under
TELEVISION PICTURE TUBES

TYPICAL OPERATING CONDITIONS

Cathode Drive Service[3]		
Anode Voltage	14,000 Volts	dc
Grid No. 4 Voltage for Focus	0 to 400 Volts	dc
Grid No. 2 Voltage	50 Volts	dc
Cathode Voltage Required for Cutoff[4]	+30 to +48 Volts	dc

CIRCUIT VALUES

Grid No. 1 Circuit Resistance	1.5 Megohms Max.

NOTES:

1. *Heater warm-up time is defined as the time required for the voltage across the heater to reach 80 % of the rated heater voltage after applying four (4) times rated heater voltage to a circuit consisting of the tube heater in series with a resistance equal to three (3) times the rated heater voltage divided by the rated heater current.*
2. *External conductive coating must be grounded.*
3. *Voltages are positive with respect to Grid No. 1 unless indicated otherwise.*
4. *Visual extinction of focused raster. For cutoff of the undeflected focused spot, the absolute value of the bias between cathode and grid will increase by about 5 volts.*

WARNING:

X-ray radiation shielding may be necessary to protect against possible danger of personal injury from prolonged exposure at close range if this tube is operated at higher than the manufacturer's Maximum Rated Anode Voltage or 16,000 volts, whichever is less.

OUTLINE

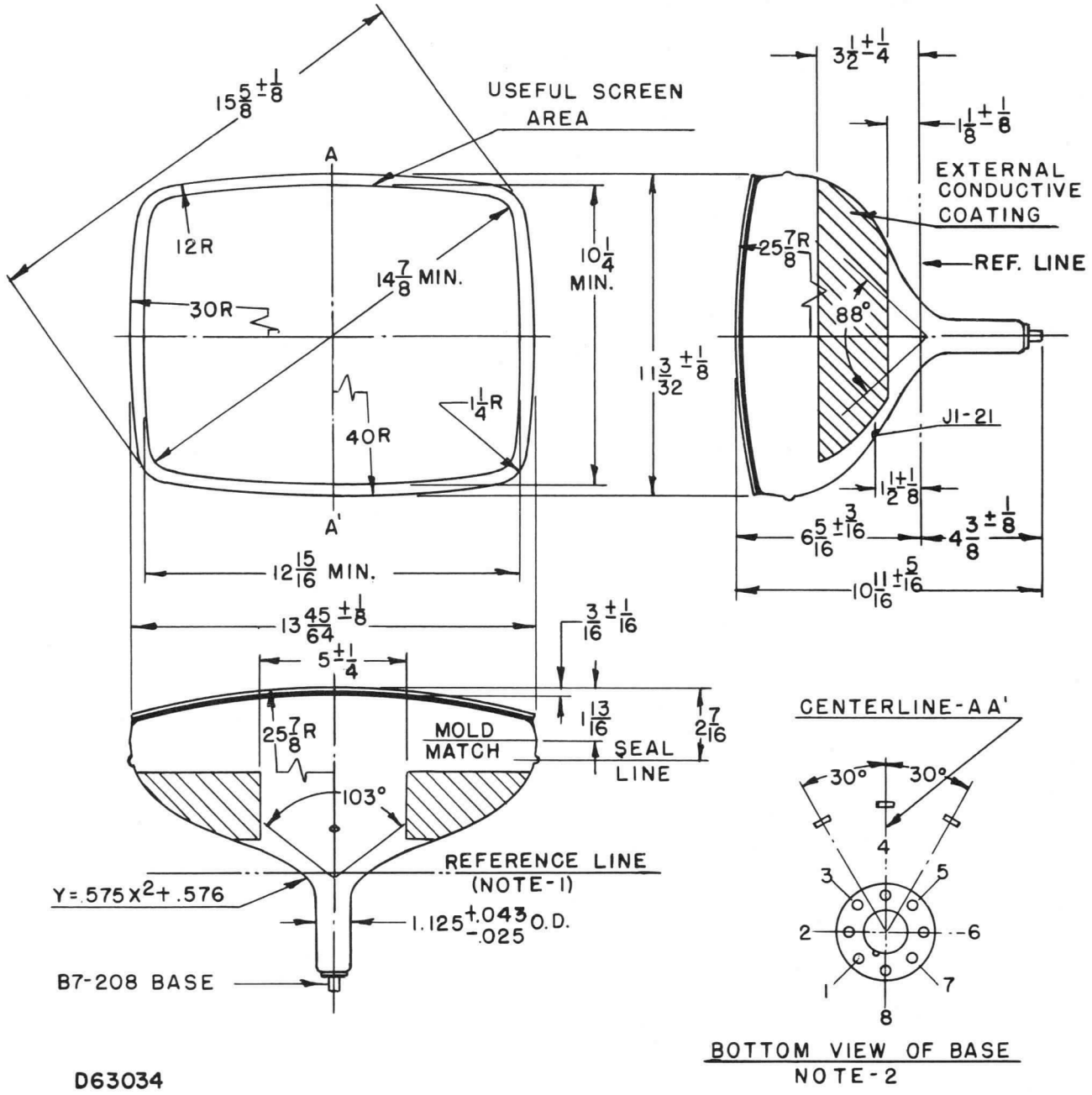

DIAGRAM NOTES:

1. *Reference line is determined by plane C-C' of JEDEC No. 126 Reference Line Gauge when the gauge is seated against the bulb.*
2. *Base Pin No. 4 aligns with vertical centerline (A-A') within 30° and is on same side as anode contact (J1-21).*
3. *Dimensions are in inches.*

SYLVANIA

engineering data service

17BP4
17BP4A

CHARACTERISTICS

GENERAL DATA

Focusing Method	Magnetic
Deflecting Method	Magnetic
Deflecting Angle (approx.)	
Horizontal	66 Degrees
Diagonal	70 Degrees
Phosphor	P4
Fluorescence	White
Persistence	Medium
Faceplate	Gray Filter Glass
Light Transmittance (approx.)	66 Percent

ELECTRICAL DATA

Heater Voltage	6.3 Volts
Heater Current (approx.)	0.6 Ampere
Direct Interelectrode Capacitances (approx.)	
Cathode to All Other Electrodes	5 $\mu\mu$f
Grid No. 1 to All Other Electrodes	6 $\mu\mu$f
Ion Trap Magnet	External, Single Field Type

MECHANICAL DATA

Minimum Useful Screen Dimensions	10¾ x 14¼ Inches
Bulb Contact, (Recessed Small Cavity Cap)	J1-21
Base (Small Shell Duodecal 5-Pin)	B5-57
Basing	12D

RATINGS

MAXIMUM RATINGS (Design Center Values)

Anode Voltage	16,000 Volts dc
Grid No. 2 Voltage	410 Volts dc
Grid No. 1 Voltage	
Negative Bias Value	125 Volts dc
Positive Bias Value	0 Volts dc
Positive Peak Value	2 Volts
Peak Heater-Cathode Voltage:	
Heater Negative with Respect to Cathode	
During Warm-up Period not to Exceed 15 Seconds	410 Volts dc
After Equipment Warm-up Period	150 Volts dc
Heater Positive with Respect to Cathode	150 Volts dc

RECOMMENDED OPERATING CONDITIONS

Anode Voltage[1]	14,000 Volts dc
Grid No. 2 Voltage	300 Volts dc
Grid No. 1 Voltage Required for Cutoff[2]	−33 to −77 Volts dc
Focusing Coil Current[3] (approx.)	95 Ma dc
Ion Trap Magnet Field Strength (approx.)	40 Gausses

CIRCUIT VALUES

Grid No. 1 Circuit Resistance	1.5 Megohms Max.

NOTES:

1. *Brilliance and definition decrease with decreasing anode voltage. In general, the anode voltage should not be less than this value.*
2. *Visual extinction of undeflected focused spot.*
3. *For JETEC focusing coil 109 or equivalent three inches from reference line, bias adjusted to 20 foot lamberts on a 10¾ x 14¼ inch picture area sharply focused at center of screen.*

QUICK REFERENCE DATA

Television Picture Tube
17" Direct Viewed
Rectangular Glass Type
Gray Filter Glass
Magnetic Deflection
Magnetic Focus
Single Field Ion Trap
(17BP4A Has External Conductive Coating)

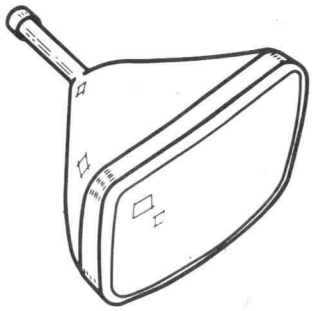

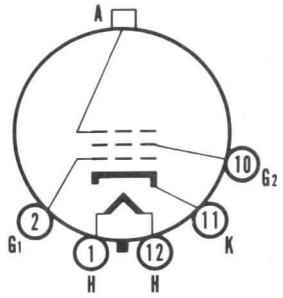

12-D

SYLVANIA ELECTRIC PRODUCTS INC.

Prepared and Released By The TECHNICAL PUBLICATIONS SECTION EMPORIUM, PENNSYLVANIA

MAY 1952

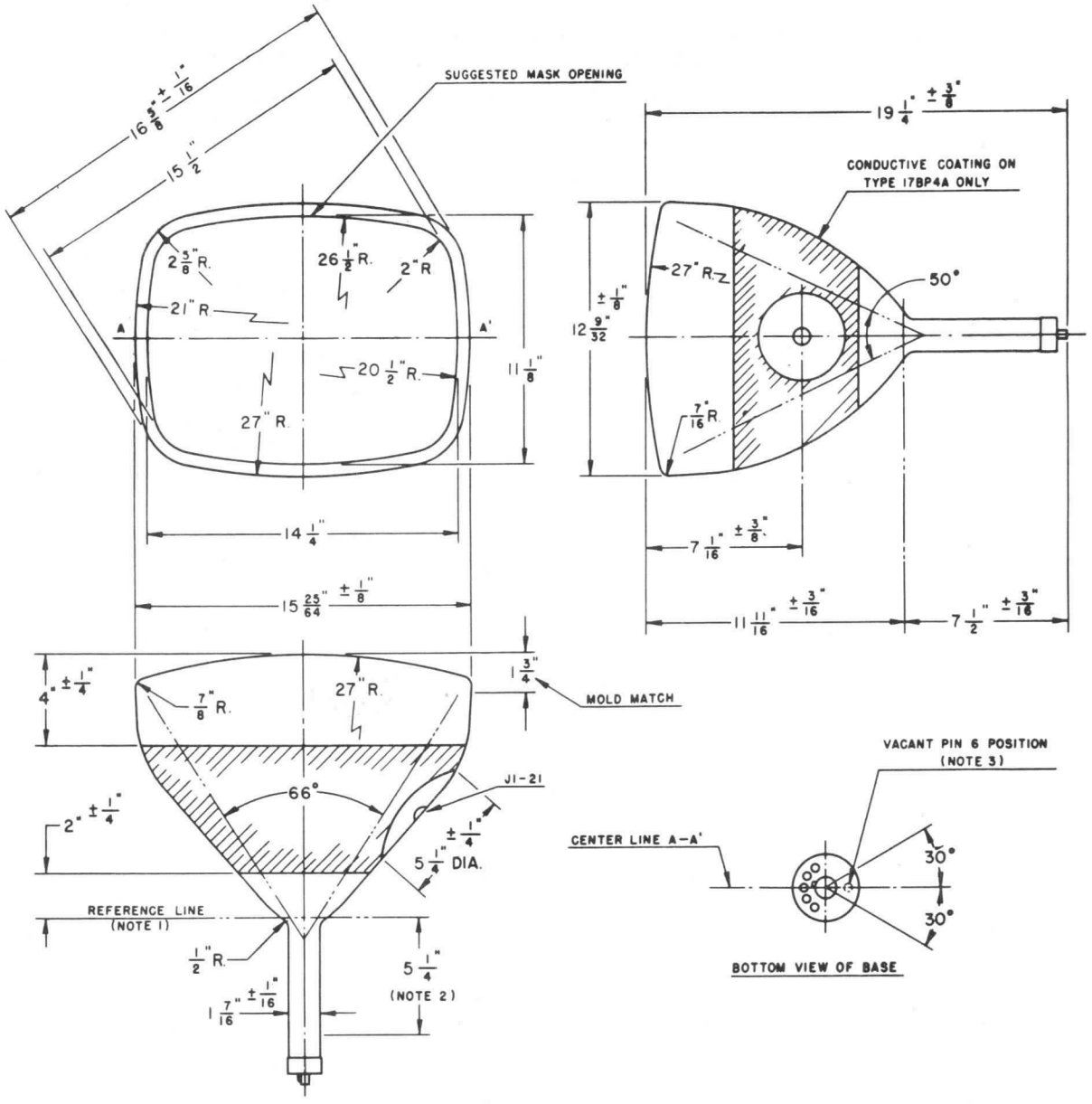

DIAGRAM NOTES:

1. *Reference line is determined by the plane of the upper edge of the reference line gauge (RTMA No. 110) when the gauge is resting on the glass cone.*
2. *Nominal position of ion trap magnet.*
3. *Anode contact aligns with vacant pin position No. 6 ±30 degrees.*

17BP4A

The Sylvania Type 17BP4A is equivalent to the Type 17BP4 except for the addition of an external conductive coating.

External Conductive Coating to Anode Capacitance	
Maximum	1500 μμf
Minimum	750 μμf
Basing	12N

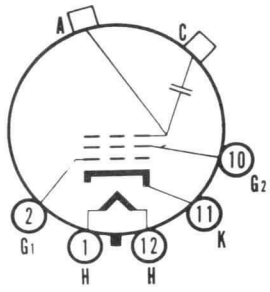

12-N

NOTES:

1. *External conductive coating must be grounded.*

WARNING:

X-ray radiation shielding may be necessary to protect against possible danger of personal injury from prolonged exposure at close range if this tube is operated at higher than the manufacturer's Maximum Rated Anode Voltage or 16,000 volts, whichever is less.

CHARACTERISTICS

GENERAL DATA

Focusing Method	Electrostatic	
Deflection Method	Magnetic	
Deflection Angles (Approx.)		
Horizontal	105	Degrees
Diagonal	110	Degrees
Vertical	87	Degrees
Phosphor	Aluminized P4	
Fluorescence	White	
Persistence	Short to Medium	
Faceplate	Gray Filter Glass	
Light Transmittance (Approx.)	78	Percent

ELECTRICAL DATA

Heater Voltage	6.3	Volts	
Heater Current	0.6	Ampere	
Heater Warm-up Time[1]	11	Seconds	
Direct Interelectrode Capacitance (Approx.)			
Cathode to All Other Electrodes	5	$\mu\mu$f	
Grid No. 1 to All Other Electrodes	6	$\mu\mu$f	
External Conductive Coating to Anode[2]	1500	$\mu\mu$f	Max.
	1000	$\mu\mu$f	Min.

MECHANICAL DATA

Minimum Useful Screen Dimensions (Maximum Assured)	$14\frac{3}{4}$ x $11\frac{11}{16}$	Inches
Minimum Useful Screen Area	155	Sq. Inches
Neck Length	$4\frac{1}{8}$	Inches
Overall Length	$11\frac{1}{4}$	Inches
Bulb	J132½ A or J132½ B	
Bulb Contact (Recessed Small Cavity Cap)	J1-21	
Base	B7-208	
	8HR	
Weight (Approx.)	10	Pounds

RATINGS

MAXIMUM RATINGS (Design Maximum Values)[3]

Anode Voltage	18,000	Volts	dc
Grid No. 4 Voltage (Focusing Electrode)	−550 to +1100	Volts	dc
Grid No. 2 Voltage	550	Volts	dc
Grid No. 1 Voltage			
Negative Bias Value	154	Volts	dc
Negative Peak Value	220	Volts	
Positive Bias Value	0	Volts	dc
Positive Peak Value	2	Volts	
Peak Heater-Cathode Voltage			
Heater Negative with Respect to Cathode			
During Warm-up Period not to Exceed 15 Seconds	450	Volts	
After Equipment Warm-up Period	200	Volts	
Heater Positive with Respect to Cathode	200	Volts	

QUICK REFERENCE DATA

Television Picture Tube
17″ Direct Viewed
Rectangular Glass Type
Lightweight Tube
Spherical Faceplate
Gray Filter Glass
Aluminized Screen
Electrostatic Focus
110° Magnetic Deflection
$4\frac{1}{8}$″ Neck
No Ion Trap
External Conductive Coating

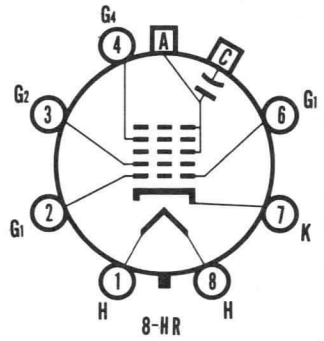

SYLVANIA
ELECTRONIC TUBES
A Division of
Sylvania Electric Products Inc.
PICTURE TUBE OPERATIONS
SENECA FALLS, NEW YORK

Prepared and Released By The
TECHNICAL PUBLICATIONS SECTION
EMPORIUM, PENNSYLVANIA

JULY, 1960

File Under
TELEVISION PICTURE TUBES

TYPICAL OPERATING CONDITIONS

Grid Drive Service[3]		
Anode Voltage	14,000 Volts	dc
Grid No. 4 Voltage for Focus	0 to 400 Volts	dc
Grid No. 2 Voltage	400 Volts	dc
Grid No. 1 Voltage Required for Cutoff[4]	−45 to −90 Volts	dc
Cathode Drive Service[5]		
Anode Voltage	14,000 Volts	
Grid No. 4 Voltage for Focus	0 to 400 Volts	
Grid No. 2 Voltage	450 Volts	
Cathode Voltage Required for Cutoff[4]	+46 to +85 Volts	

CIRCUIT VALUES

Grid No. 1 Circuit Resistance	1.5 Megohms Max.

NOTES:

1. *Heater warm-up time is defined as the time required for the voltage across the heater to reach 80% of the rated heater voltage after applying four (4) times rated heater voltage to a circuit consisting of the tube heater in series with a resistance equal to three (3) times the rated heater voltage divided by the rated heater current.*
2. *External conductive coating must be grounded.*
3. *Voltages are positive with respect to cathode unless indicated otherwise.*
4. *Visual extinction of focused raster. Extinction of stationary focused spot will require that these values be increased about 5 volts.*
5. *Voltages are positive with respect to Grid No. 1 unless indicated otherwise.*

WARNING:

X ray radiation shielding may be necessary to protect against possible danger of personal injury from prolonged exposure at close range if this tube is operated at higher than the manufacturer's Maximum Rated Anode Voltage or 16,000 volts, whichever is less.

OUTLINE

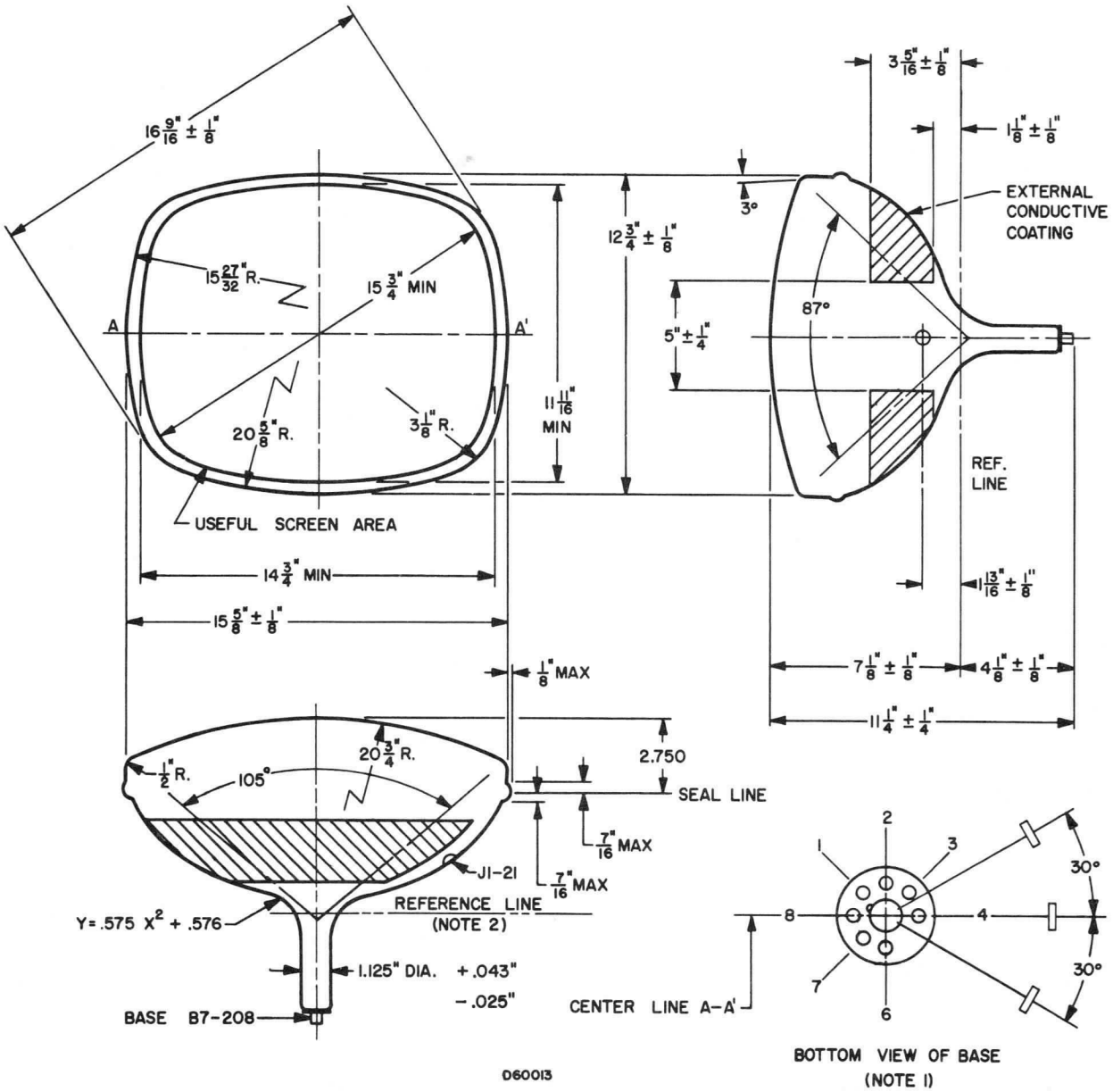

DIAGRAM NOTES:

1. *Base Pin No. 4 aligns with anode contact (J1-21) within 30°.*
2. *Reference line is determined by plane C-C' of JEDEC No. 126 Reference Line Gauge, when the gauge is seated against the bulb.*

CHARACTERISTICS

GENERAL DATA

Focusing Method	Electrostatic
Deflection Method	Magnetic
Deflection Angles (approx.)	
Horizontal	105 Degrees
Diagonal	110 Degrees
Vertical	87 Degrees
Phosphor	Aluminized P4
Fluorescence	White
Persistence	Short to Medium
Faceplate	Gray Filter Glass
Light Transmittance (approx.)	77 Percent

ELECTRICAL DATA

Heater Voltage	6.3 Volts
Heater Current	0.60 ± 5% Ampere
Heater Warm-up Time[1]	11 Seconds
Direct Interelectrode Capacitances (approx.)	
Cathode to All Other Electrodes	5 $\mu\mu$f
Grid No. 1 to All Other Electrodes	6 $\mu\mu$f
External Conductive Coating to Anode[2]	1500 $\mu\mu$f Max.
	1000 $\mu\mu$f Min.

MECHANICAL DATA

Minimum Useful Screen Dimensions (Maximum Assured)	
Height	$11\frac{11}{16}$ Inches
Width	$14\frac{3}{4}$ Inches
Diagonal	$15\frac{3}{4}$ Inches
Area	155 Sq. Inches
Neck Length	$3\frac{5}{8} \pm \frac{1}{8}$ Inches
Overall Length	$10\frac{3}{4} \pm \frac{1}{4}$ Inches
Bulb	J132½-A or J132½-B
Bulb Contact (Recessed Small Cavity Cap)	J1-21
Base	B7-208
Basing	8HR
Weight (approx.)	10 Pounds

RATINGS

MAXIMUM RATINGS (Design Maximum Values) Grid Drive Service

Anode Voltage	17,600 Volts dc
Grid No. 4 Voltage (Focusing Electrode)	−550 to +1100 Volts dc
Grid No. 2 Voltage	550 Volts dc
Grid No. 1 Voltage	
Negative Bias Value	155 Volts dc
Negative Peak Value	220 Volts
Positive Bias Value	0 Volts dc
Positive Peak Value	2 Volts
Peak Heater-Cathode Voltage	
Heater Negative with Respect to Cathode	
During Warm-up Period not to Exceed 15 Seconds	450 Volts
After Equipment Warm-up Period	200 Volts
Heater Positive with Respect to Cathode	200 Volts

QUICK REFERENCE DATA

Television Picture Tube
17″ Direct View
Short Neck
Rectangular Glass Type
Spherical Faceplate
Gray Filter Glass
Aluminized Screen
Electrostatic Focus
110° Magnetic Deflection
1⅛″ Neck Diameter
No Iron Trap
External Conductive Coating

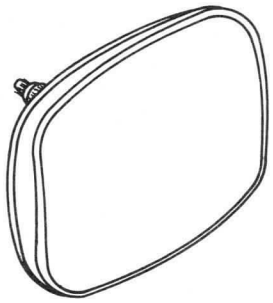

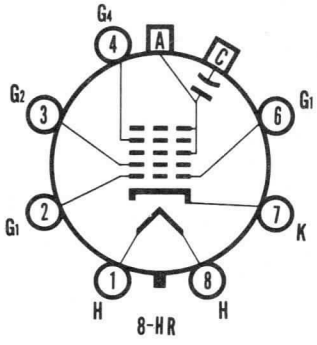

SYLVANIA
ELECTRONIC TUBES
A Division of
Sylvania Electric Products Inc.
PICTURE TUBE OPERATIONS
SENECA FALLS, NEW YORK

Prepared and Released By The
TECHNICAL PUBLICATIONS SECTION
EMPORIUM, PENNSYLVANIA

APRIL, 1960

File Under
TELEVISION PICTURE TUBES

TYPICAL OPERATING CONDITIONS — Grid Drive Service

Anode Voltage	14,000 Volts	dc
Grid No. 4 Voltage for Focus	0 to 400 Volts	dc
Grid No. 2 Voltage	300 Volts	dc
Grid No. 1 Voltage Required for Cutoff[3]	−35 to −72 Volts	dc

CIRCUIT VALUES

Circuit No. 1 Circuit Resistance	1.5 Megohm Max.

NOTES:

1. *Heater warm-up time is defined as the time required for the voltage across the heater to reach 80% of the rated heater voltage after applying four (4) times rated heater voltage to a circuit consisting of the tube heater in series with a resistance equal to three (3) times the rated heater voltage divided by the rated heater current.*
2. *External conductive coating must be grounded.*
3. *Visual extinction of focused raster. Extinction of stationary focused spot will require that these values be about 5 volts more negative.*

WARNING:

X-ray radiation shielding may be necessary to protect against possible danger of personal injury from prolonged exposure at close range if this tube is operated at higher than the manufacturer's Maximum Rated Anode Voltage or 16,000 volts, whichever is less.

DIAGRAM NOTES

1. *Reference line is determined by plane C-C' of JEDEC No. 126 Reference Line Gauge, when the gauge is seated against the bulb.*
2. *Base Pin No. 4 aligns with horizontal centerline (A-A') within 30° and is on same side as anode contact, J1-21.*

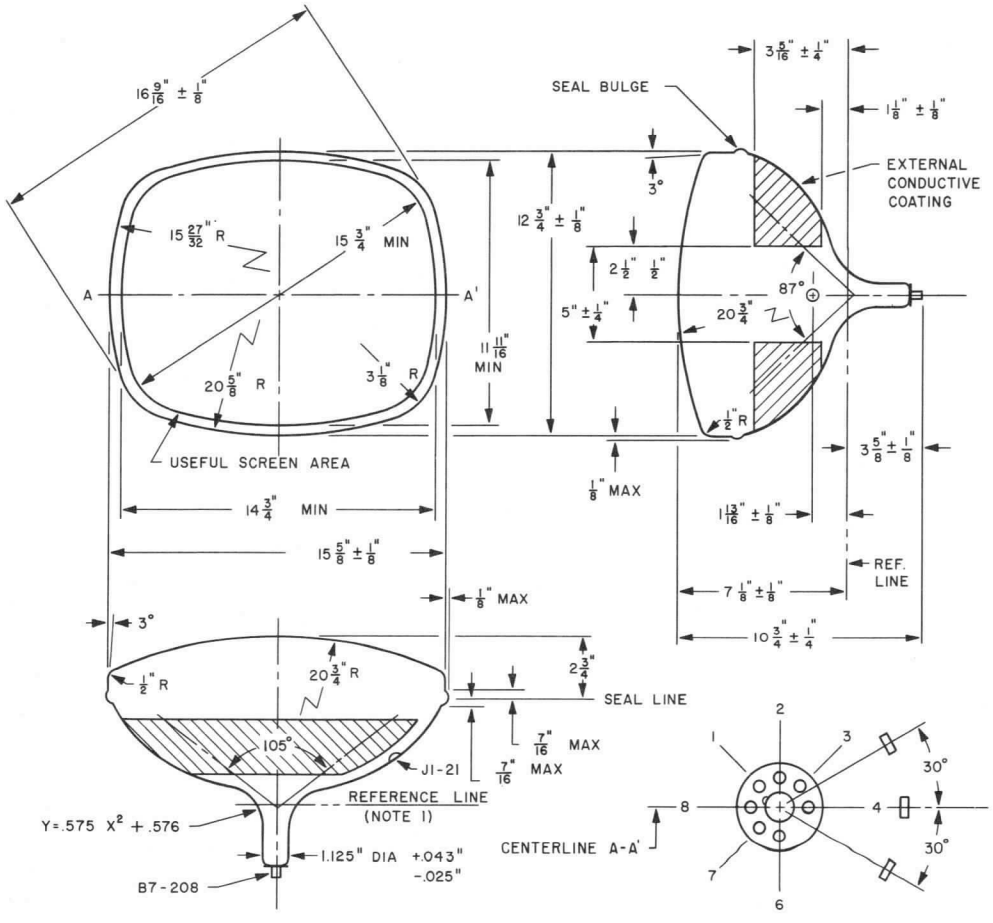

CHARACTERISTICS

GENERAL DATA

Focusing Method	Tri-Potential Electrostatic
Deflection Method	Magnetic
Deflection Angles (Approx.)	
Horizontal	105 Degrees
Diagonal	110 Degrees
Vertical	87 Degrees
Phosphor	Aluminized P4
Fluorescence	White
Persistence	Short to Medium
Faceplate	Gray Filter Glass
Light Transmittance (Approx.)	77 Percent

ELECTRICAL DATA

Heater Voltage	6.3	Volts
Heater Current	0.45 ± 5%	Ampere
Heater Warm-up Time[1]	11	Seconds
Direct Interelectrode Capacitances (Approx.)		
Cathode to All Other Electrodes	5	μμf
Grid No. 1 to All Other Electrodes	6	μμf
External Conductive Coating to Anode[2]	1500	μμf Max.
	1000	μμf Min.

MECHANICAL DATA

Minimum Useful Screen Dimensions (Maximum Assured)	
Height	11 11/16
Width	14 3/4
Diagonal	15 3/4
Area	155 Sq. Inches
Neck Length	3 9/16 ± 1/8 Inches
Overall Length	10 11/16 ± 1/4 Inches
Bulb	J132 1/2-A or J132 1/2-B
Bulb Contact (Recessed Small Cavity Cap)	J1-21
Base	B7-208
Basing	8JR
Weight (Approx.)	10 Pounds

RATINGS

MAXIMUM RATINGS (Design Maximum Values) Grid Drive Service

Anode Voltage	17,600	Volts	dc
Grid No. 3 Voltage (Focusing Electrode)	700	Volts	dc
Grid No. 2 Voltage	600	Volts	dc
Grid No. 1 Voltage			
Negative Bias Value	154	Volts	dc
Negative Peak Value	220	Volts	
Positive Bias Value	0	Volts	dc
Positive Peak Value	2	Volts	
Peak Heater-Cathode Voltage			
Heater Negative with Respect to Cathode			
During Warm-up Period not to Exceed 15 Seconds	450	Volts	
After Equipment Warm-up Period	200	Volts	
Heater Positive with Respect to Cathode	200	Volts	

QUICK REFERENCE DATA

Television Picture Tube
17" Direct Viewed
Rectangular Glass Type
Spherical Faceplate
Gray Filter Glass
Aluminized Screen
Tri-Potential Electrostatic Focus
110° Magnetic Deflection
No Ion Trap
External Conductive Coating
Short Neck
450 Ma Heater

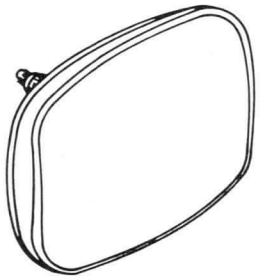

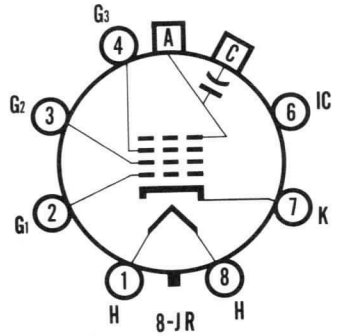

SYLVANIA
ELECTRONIC TUBES
A Division of
Sylvania Electric Products, Inc.
PICTURE TUBE OPERATIONS
SENECA FALLS, NEW YORK

Prepared and Released By The
TECHNICAL PUBLICATIONS SECTION
EMPORIUM, PENNSYLVANIA
SEPTEMBER, 1959

TYPICAL OPERATING CONDITIONS (Grid Drive Service)

Anode Voltage	14,000	Volts	dc
Grid No. 3 Voltage for Focus	0 to +400	Volts	dc
Grid No. 2 Voltage[3]	500	Volts	dc
Grid No. 1 Voltage Required for Cutoff[4]	−43 to −78	Volts	dc

CIRCUIT VALUES

Grid No. 1 Circuit Resistance	1.5	Megohms Max.

NOTES:

1. *Heater warm-up time is defined as the time required for the voltage across the heater to reach 80% of the rated heater voltage after applying four (4) times rated heater voltage to a circuit consisting of the tube heater in series with a resistance equal to three (3) times the rated heater voltage divided by the rated heater current.*
2. *External conductive coating must be grounded.*
3. *Brightness and resolution improve with increase in Grid No. 2 voltage. A minimum value of 400 volts is recommended.*
4. *Visual extinction of focused raster. Extinction of stationary focused spot will require that these values be about 5 volts more negative.*

WARNING:

X-ray radiation shielding may be necessary to protect against possible danger of personal injury from prolonged exposure at close range if this tube is operated at higher than the manufacturer's Maximum Rated Anode Voltage or 16,000 volts, whichever is less.

OUTLINE

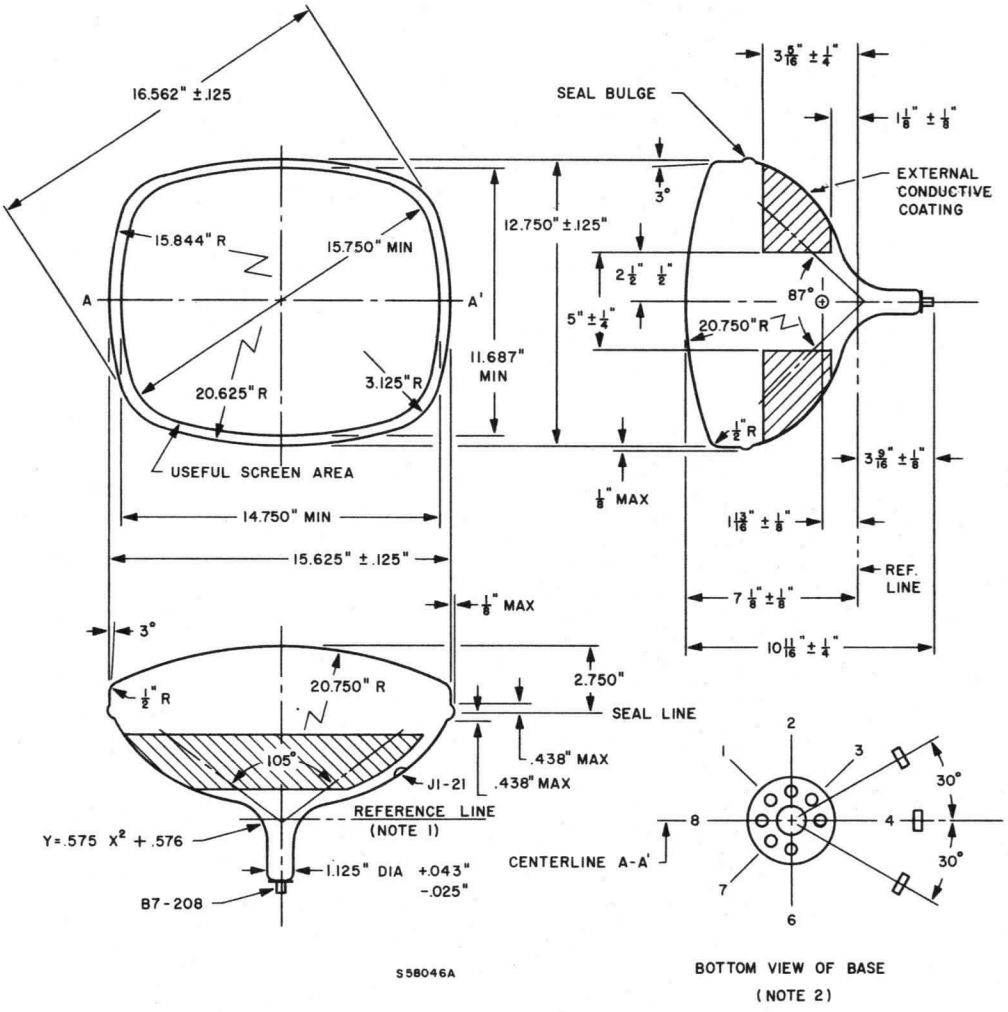

DIAGRAM NOTES:

1. *Reference line is determined by plane C-C' of JEDEC No. 126 Reference Line Gauge, when the gauge is seated against the bulb.*
2. *Base Pin No. 4 aligns with horizontal centerline (A-A') within 30° and is on same side as anode contact, J1-21.*

A Technical Publication of
SYLVANIA ELECTRIC
PRODUCTS INC.
EMPORIUM, PA.

CHARACTERISTICS

GENERAL DATA

Focusing Method	Electrostatic
Deflection Method	Magnetic
Deflection Angles (Approx.)	
Horizontal	102 Degrees
Diagonal	114 Degrees
Vertical	86 Degrees
Phosphor	Aluminized P4
Fluorescence	White
Persistence	Short to Medium
Faceplate	Bonded Shield
(Gray Filter Glass Safety Plate Laminated Directly to Face of Tube)	
Light Transmittance of Faceplate Assembly (Approx.)	44 Percent

Types 19AUP4 and 19BCP4 have external surface of safety plate treated to reduce specular reflection.

ELECTRICAL DATA

	19BAP4 19BCP4	19AFP4 19AUP4	
Heater Voltage	6.3	6.3	Volts
Heater Current ± 5%	0.30	0.60	Ampere
Heater Warm-up Time[1]	11	11	Seconds
Direct Interelectrode Capacitances (Approx.)			
Cathode to All Other Electrodes		5	μμf
Grid No 1 to All Other Electrodes		6	μμf
External Conductive Coating to Anode[2]		1500	μμf Max.
		1000	μμf Min.

MECHANICAL DATA

Minimum Useful Screen Dimensions (Maximum Assured)	
Height	$12\frac{1}{16}$ Inches
Width	$15\frac{1}{4}$ Inches
Diagonal	$17\frac{3}{4}$ Inches
Area	174 Sq. Inches
Neck Length	$4\frac{1}{8} \pm \frac{1}{8}$ Inches
Overall Length	$11\frac{5}{8} \pm \frac{5}{16}$ Inches
Bulb	J149C
Safety Plate (19AFP4, 19BAP4)	FP159A
Safety Plate (19AUP4, 19BCP4)	FP159B
Bulb Contact (Recessed Small Cavity Cap)	J1-21
Base	B7-208
Basing	8HR
Weight (Approx.)	$18\frac{1}{2}$ Pounds

RATINGS

MAXIMUM RATINGS (Design Maximum Values)

Grid Drive Service[3]

Anode Voltage	20,000 Volts	dc
Grid No. 4 Voltage (Focusing Electrode)	−550 to +1100 Volts	dc
Grid No. 2 Voltage	550 Volts	dc
Grid No. 1 Voltage		
Negative Bias Voltage	155 Volts	dc
Negative Peak Value	220 Volts	
Positive Bias Value	0 Volts	dc
Positive Peak Value	2 Volts	
Peak Heater-Cathode Voltage		
Heater Negative with Respect to Cathode During Warm-up Period not to Exceed 15 Seconds	450 Volts	
After Equipment Warm-up Period	200 Volts	
Heater Positive with Respect to Cathode	200 Volts	

QUICK REFERENCE DATA

Television Picture Tube
19″ Direct Viewed
Rectangular Glass Type
Spherical Faceplate
Bonded Shield
Gray Filter Glass
Aluminized Screen
Electrostatic Focus
114° Magnetic Deflection
No Ion Trap
External Conductive Coating

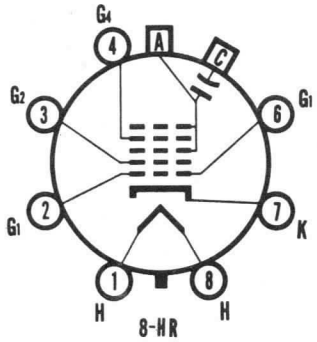

SYLVANIA
ELECTRONIC TUBES
A Division of
Sylvania Electric Products Inc.
PICTURE TUBE OPERATIONS
SENECA FALLS, NEW YORK

Prepared and Released By The
TECHNICAL PUBLICATIONS SECTION
EMPORIUM, PENNSYLVANIA

OCTOBER, 1961

File Under
TELEVISION PICTURE TUBES

MAXIMUM RATINGS (Design Maximum Values) Con't.

Cathode Drive Service[4]

Anode Voltage	20,000 Volts	dc
Grid No. 4 Voltage (Focusing Electrode)	–400 to +1250 Volts	dc
Grid No. 2 Voltage	700 Volts	dc
Cathode Voltage		
Positive Bias Value	155 Volts	dc
Positive Peak Value	220 Volts	
Negative Bias Value	0 Volts	dc
Negative Peak Value	2 Volts	
Peak Heater-Cathode Voltage		
Heater Negative with Respect to Cathode		
During Warm-up Period not to Exceed 15 Seconds	450 Volts	
After Equipment Warm-up Period	200 Volts	
Heater Positive with Respect to Cathode	200 Volts	

TYPICAL OPERATING CONDITIONS

Grid Drive Service[3]

Anode Voltage	16,000 Volts	dc
Grid No. 4 Voltage for Focus	0 to 400 Volts	dc
Grid No. 2 Voltage	400 Volts	dc
Grid No. 1 Voltage Required for Cutoff[5]	–46 to –94 Volts	dc

Cathode Drive Service[4]

Anode Voltage	16,000 Volts	dc
Grid No. 4 Voltage for Focus	0 to 400 Volts	dc
Grid No. 2 Voltage	400 Volts	dc
Cathode Voltage Required for Cutoff[5]	42 to 78 Volts	dc

CIRCUIT VALUES

Grid No. 1 Circuit Resistance	1.5 Megohms Max.

NOTES:

1. *Heater warm-up time is defined as the time required for the voltage across the heater to reach 80% of the rated heater voltage after applying four (4) times rated heater voltage to a circuit consisting of the tube heater in series with a resistance equal to three (3) times the rated heater voltage divided by the rated heater current.*
2. *External conductive coating must be grounded.*
3. *Voltages are positive with respect to cathode unless indicated otherwise.*
4. *Voltages are positive with respect to Grid No. 1 unless indicated otherwise.*
5. *Visual extinction of focused raster. For cutoff of the undeflected focused spot, the absolute value of the bias between cathode and grid will increase by about 5 volts.*

WARNING:

X-ray radiation shielding may be necessary to protect against possible danger of personal injury from prolonged exposure at close range if this tube is operated at higher than the manufacturer's Maximum Rated Anode Voltage or 16,000 volts, whichever is less.

OUTLINE

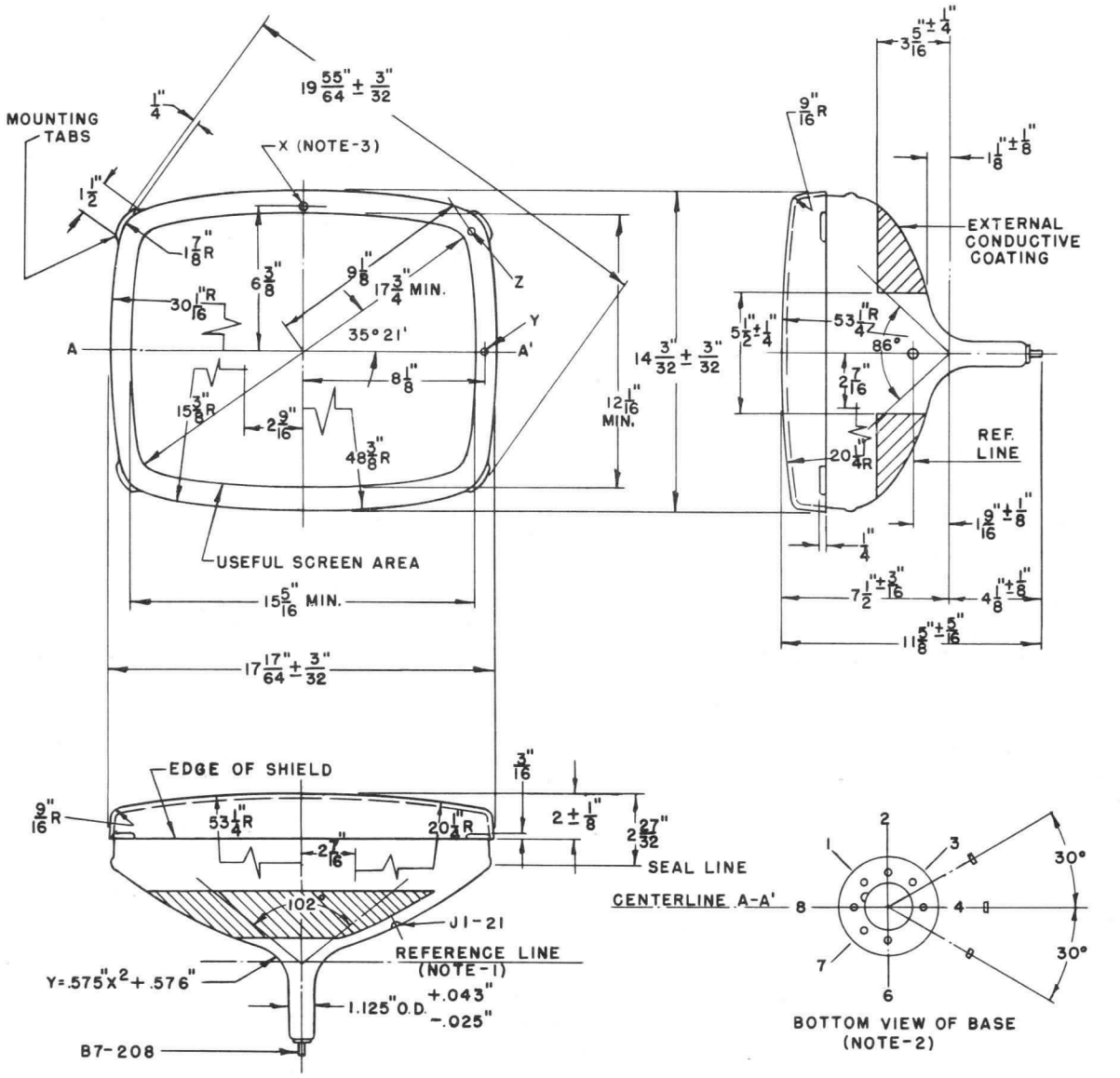

DIAGRAM NOTES:

1. *Reference line is determined by plane C-C' of JEDEC No. 126 Reference Line Gauge, when the gauge is seated against the bulb.*
2. *Base Pin No. 4 aligns with horizontal centerline (A-A') within 30° and is on same side as anode contact, J1-21.*
3. *Planes perpendicular to tube axis and passing through points X, Y and Z are located as follows:*

   Plane tangent to crown of face to plane of X: 0.500" Nominal
   Plane of X to plane of Y = .421" ±.025"
   Plane of X to plane of Z = .738" ± .045"

CHARACTERISTICS

GENERAL DATA

Focusing Method	Electrostatic
Deflection Method	Magnetic
Deflection Angles (Approx.)	
Horizontal	101 Degrees
Diagonal	114 Degrees
Vertical	86 Degrees
Phosphor	Aluminized P4
Fluorescence	White
Persistence	Short to Medium
Faceplate	Gray Filter Glass
Light Transmittance (Approx.)	79 Percent

ELECTRICAL DATA

Heater Voltage	6.3 Volts	
Heater Current	0.45+5% Ampere	
Heater Warm-up Time[1]	11 Seconds	
Direct Interelectrode Capacitances (Approx.)		
Cathode to All Other Electrodes	5 $\mu\mu$f	
Grid No. 1 to All Other Electrodes	6 $\mu\mu$f	
External Conductive Coating to Anode[2]	1900 $\mu\mu$f	Max.
	1400 $\mu\mu$f	Min.

MECHANICAL DATA

Minimum Useful Screen Dimensions (Maximum Assured)	
Height	12 Inches
Diagonal	17 9/16 Inches
Width	15⅛ Inches
Minimum Useful Screen Area	172 Sq. Inches
Neck Length	4⅛ ± ⅛ Inches
Bulb	J149A
Bulb Contact (Recessed Small Cavity Cap)	J1-21
Base	B6-214
Basing	7FA
Weight (Approx.)	13½ Pounds
Overall Length	11⅜ ± ¼ Inches

RATINGS

MAXIMUM RATINGS (Design Maximum Values)[3]

Anode Voltage		
Maximum	19,800 Volts	dc
Minimum	12,000 Volts	dc
Grid No. 4 Voltage (Focusing Electrode)[4]	−550 to +1100 Volts	dc
Grid No. 2 Voltage		
Maximum	70 Volts	dc
Minimum	40 Volts	dc
Cathode Voltage		
Positive Bias Value	100 Volts	dc
Negative Peak Value	0 Volts	
Peak Heater-Cathode Voltage		
Heater Negative with Respect to Cathode During Warm-up Period not to Exceed 15 Seconds	410 Volts	
After Equipment Warm-up Period	180 Volts	
Heater Positive with Respect to Cathode	180 Volts	

QUICK REFERENCE DATA

Television Picture Tube
19" Direct Viewed
Rectangular Glass Type
Spherical Faceplate
Gray Filter Glass
Aluminized Screen
Electrostatic Focus
114° Magnetic Deflection
1⅛" Neck Diameter
No Ion Trap
External Conductive Coating
Low Grid No. 2 Voltage
Cathode Drive Design
6.3 Volt, 450 ma heater

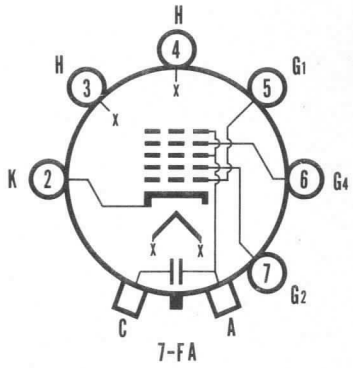

7-FA

SYLVANIA
ELECTRONIC TUBES
A Division of
Sylvania Electric Products Inc.
PICTURE TUBE OPERATIONS
SENECA FALLS, NEW YORK

Prepared and Released By The
TECHNICAL PUBLICATIONS SECTION
EMPORIUM, PENNSYLVANIA

JUNE, 1961

File Under
TELEVISION PICTURE TUBES

TYPICAL OPERATING CONDITIONS[3]

Anode Voltage	14,500 Volts	dc
Grid No. 4 Voltage for Focus	0 to +500 Volts	dc
Grid No. 2 Voltage	50 Volts	dc
Cathode Voltage Required for Cutoff[5]	35 to 50 Volts	dc

CIRCUIT VALUES

Grid No. 1 Circuit Resistance	1.5 Megohms Max.

NOTES:

1. *Heater Warm-up Time is defined as the time required for the voltage across the heater to reach 80% of its rated value after applying four (4) times rated heater voltage to a circuit consisting of the tube heater in series with a resistance equal to three (3) times rated heater voltage divided by rated heater current.*
2. *External conductive coating must be grounded.*
3. *This type is designed for cathode-drive service. All voltages shown are positive with respect to Grid No. 1 Voltage, unless otherwise indicated.*
4. *The focus electrode may be modulated to improve overall focus.*
5. *Visual extinction of focused raster. Extinction of stationary focused spot will require that these values be increased approximately 5 volts.*

WARNING:

X-ray radiation shielding may be necessary to protect against possible danger of personal injury from prolonged exposure at close range if this tube is operated at higher than the manufacturer's Maximum Rated Anode Voltage or 16,000 volts, whichever is less.

OUTLINE

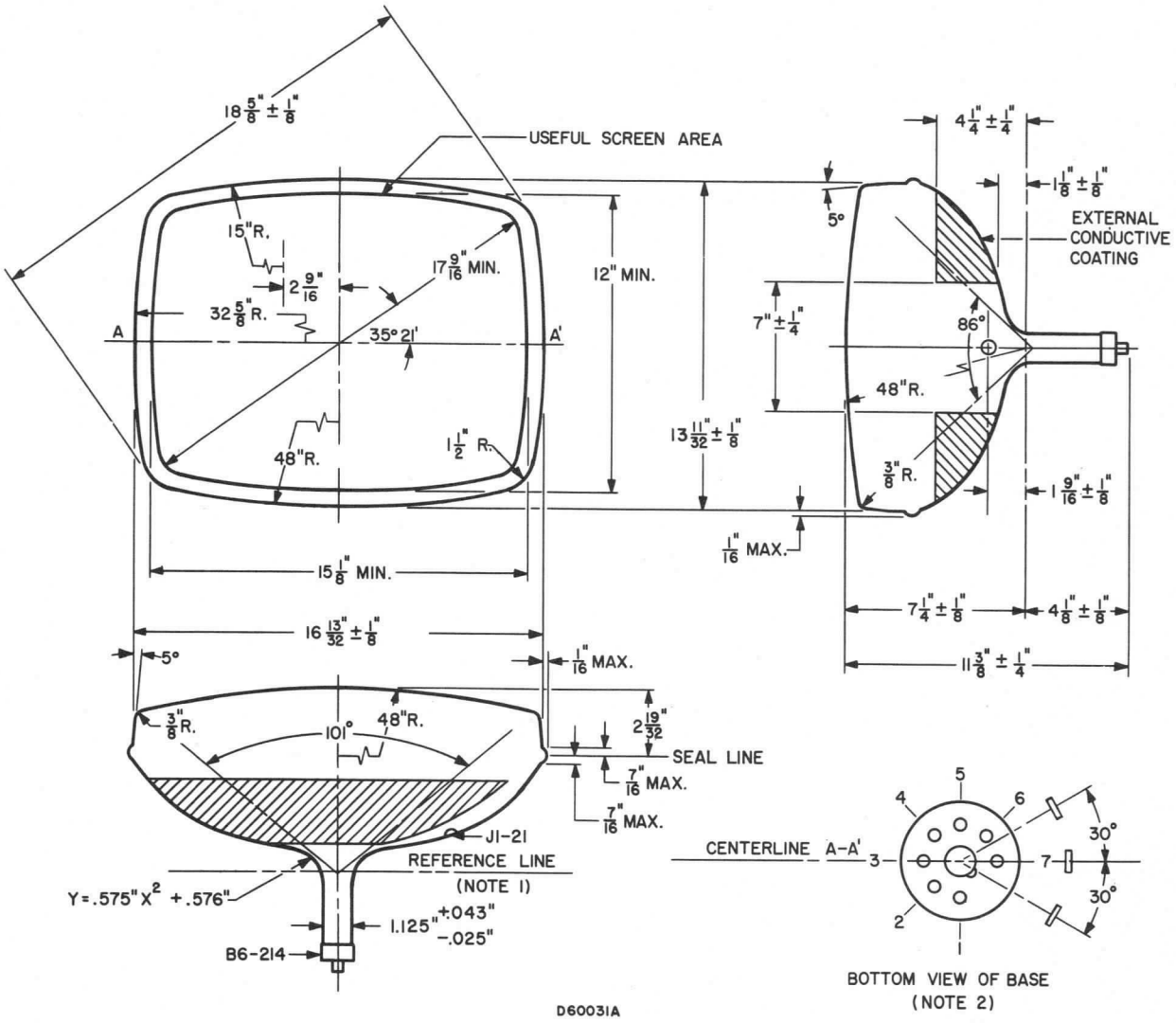

DIAGRAM NOTES:

1. *Reference line is determined by plane C-C' JEDEC No. 126 Reference Gauge when the gauge is seated against the bulb.*
2. *Base Pin No. 7 aligns with anode contact (J1-21) within 30°.*

SYLVANIA

engineering data service

SYLVANIA
19ANP4
19YP4

CHARACTERISTICS

GENERAL DATA

Focusing Method	Tri-Potential Electrostatic
Deflection Method	Magnetic
Deflection Angles (Approx.)	
Horizontal	102 Degrees
Diagonal	114 Degrees
Vertical	85 Degrees
Phosphor	Aluminized P4
Fluorescence	White
Persistence	Short to Medium
Faceplate	Gray Filter Glass
Light Transmittance (Approx.)	78 Percent

ELECTRICAL DATA

	19ANP4	19YP4	
Heater Voltage	6.3	6.3	Volts
Heater Current	0.450±5%	0.600±5%	Ampere
Heater Warm-up Time[1]		11	Seconds
Direct Interelectrode Capacitances (Approx.)			
Cathode to All Other Electrodes		5	μμf
Grid No. 1 to All Other Electrodes		6	μμf
External Conductive Coating to Anode [2]		1500	μμf Max.
		1000	μμf Min.

MECHANICAL DATA

Minimum Useful Screen Dimensions (Maximum Assured)	15⅛ x 12 Inches
Minimum Useful Screen Area	172 Sq. Inches
Neck Length	3 9/16 ± ⅛ Inches
Overall Length	10 13/16 ± ¼ Inches
Bulb	J149A1
Bulb Contact (Recessed Small Cavity Cap)	J1-21
Base	B7-208
Basing	8JR
Weight (Approx.)	14 Pounds

RATINGS

MAXIMUM RATINGS (Design Maximum Values)

Grid Drive Service

Maximum Anode Voltage	20,000 Volts	dc
Minimum Anode Voltage	11,000 Volts	dc
Grid No. 3 Voltage (Focusing Electrode)	−350 to +700 Volts	dc
Maximum Grid No. 2 Voltage	600 Volts	dc
Minimum Grid No. 2 Voltage	300 Volts	dc
Grid No. 1 Voltage		
Negative Bias Value	155 Volts	dc
Negative Peak Value	220 Volts	
Positive Bias Value	0 Volts	dc
Positive Peak Value	2 Volts	
Peak Heater-Cathode Voltage		
Heater Negative with Respect to Cathode		
During Warm-up Period Not to Exceed 15 Seconds	450 Volts	
After Equipment Warm-up Period	200 Volts	
Heater Positive with Respect to Cathode	200 Volts	

QUICK REFERENCE DATA

Television Picture Tube
19″ Direct Viewed
Rectangular Glass Type
Spherical Faceplate
Gray Filter Glass
Aluminized Screen
Tri-Potential Electrostatic Focus
114° Magnetic Deflection
1⅛″ Neck Diameter
No Ion Trap
External Conductive Coating
Short Neck
19ANP4: 450 Ma Heater

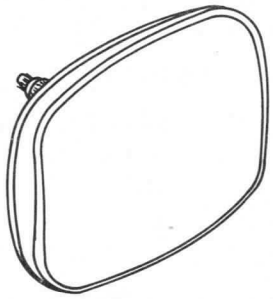

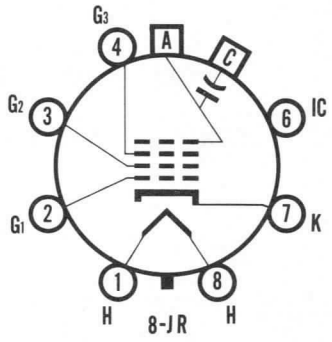

SYLVANIA
ELECTRONIC TUBES
A Division of
Sylvania Electric Products Inc.
PICTURE TUBE OPERATIONS
SENECA FALLS, NEW YORK
Prepared and Released By The TECHNICAL PUBLICATIONS SECTION EMPORIUM, PENNSYLVANIA
DECEMBER, 1961

File Under
TELEVISION PICTURE TUBES

MAXIMUM RATINGS (Design Maximum Values) (Continued)

Cathode Drive Service

Maximum Anode Voltage	20,000 Volts	dc
Minimum Anode Voltage	11,000 Volts	dc
Grid No. 3 Voltage (Focusing Electrode)	−200 to +850 Volts	dc
Maximum Grid No. 2 Voltage	750 Volts	dc
Minimum Grid No. 2 Voltage	450 Volts	dc
Cathode Voltage		
Positive Bias Value	155 Volts	dc
Positive Peak Value	220 Volts	
Negative Bias Value	0 Volts	dc
Negative Peak Value	2 Volts	dc
Peak Heater-Cathode Voltage		
Heater Negative with Respect to Cathode		
During Warm-up Period Not to Exceed 15 Seconds	450 Volts	
After Equipment Warm-up Period	200 Volts	
Heater Positive with Respect to Cathode	200 Volts	

TYPICAL OPERATING CONDITIONS

Grid Drive Service

Anode Voltage	16,000 Volts	dc
Grid No. 3 Voltage for Focus	0 to 400 Volts	dc
Grid No. 2 Voltage	500 Volts	dc
Grid No. 1 Voltage Required for Cutoff[3]	−43 to −78 Volts	dc

Cathode Drive Service

Anode Voltage	16,000 Volts
Grid No. 3 Voltage for Focus	0 to 400 Volts
Grid No. 2 Voltage	500 Volts
Grid No. 1 Voltage	0 Volts
Cathode Voltage Required for Cutoff	41 to 69 Volts

CIRCUIT VALUES

Grid No. 1 Circuit Resistance	1.5 Megohms Max.

NOTES:

1. *Heater warm-up time is defined as the time required for the voltage across the heater to reach 80% of its rated value after applying four (4) times rated heater voltage to a circuit consisting of the tube heater in series with a resistance equal to three (3) times rated heater voltage divided by rated heater current.*
2. *External conductive coating must be grounded.*
3. *Visual extinction of focused raster. Extinction of stationary focused spot will require that these values be about 5 volts more negative.*

WARNING:

X-ray radiation shielding may be necessary to protect against possible danger of personal injury from prolonged exposure at close range if this tube is operated at higher than the manufacturer's Maximum Rated Anode Voltage or 16,000 volts, whichever is less.

OUTLINE

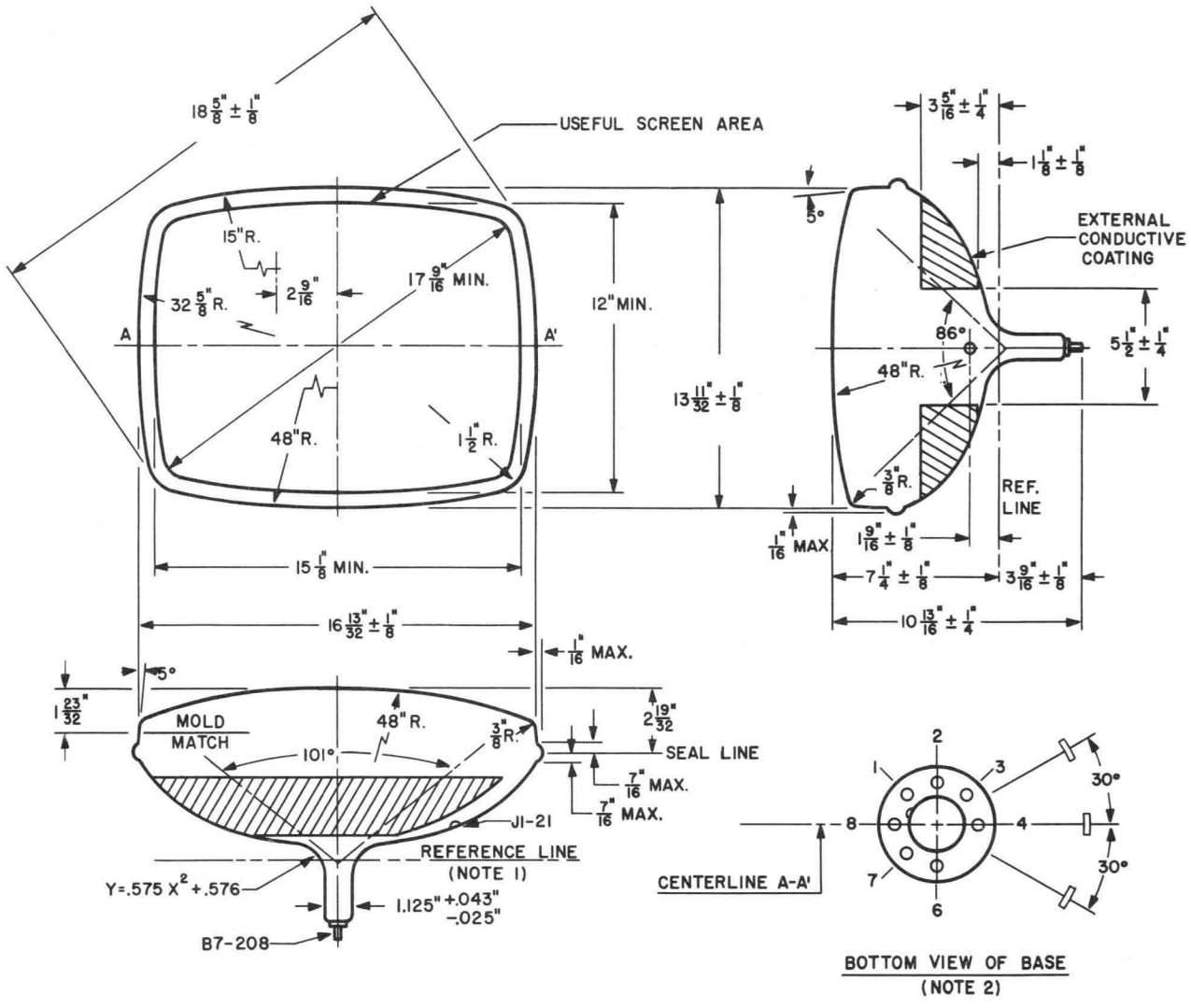

D60030A

DIAGRAM NOTES:

1. *Reference line is determined by plane C-C' of JEDEC No. 126 Reference Line Gauge, when the gauge is seated against the bulb.*
2. *Base Pin No. 4 aligns with horizontal centerline (A-A') within 30° and is on same side as anode contact, J1-21.*

CHARACTERISTICS

GENERAL DATA

Focusing Method	Electrostatic	
Deflection Method	Magnetic	
Deflection Angles (Approx.)		
Horizontal	102	Degrees
Diagonal	114	Degrees
Vertical	86	Degrees
Phosphor	Aluminized P4	
Fluorescence	White	
Persistence	Short to Medium	
Faceplate	Bonded Shield	
(Gray Filter Glass Safety Plate Laminated Directly to Face of Tube)		
Light Transmittance of Faceplate Assembly (Approx.)	44	Percent

ELECTRICAL DATA

Heater Voltage	6.3	Volts	
Heater Current	.0.60 ±5%	Ampere	
Heater Warm-up Time[1]	11	Seconds	
Direct Interelectrode Capacitances (Approx.)			
Cathode to All Other Electrodes	5	μμf	
Grid No. 1 to All Other Electrodes	6	μμf	
External Conductive Coating to Anode[2]	1500	μμf	Max.
	1000	μμf	Min.

MECHANICAL DATA

Minimum Useful Screen Dimensions (Maximum Assured)		
Height	12 1/16	Inches
Width	15 5/16	Inches
Diagonal	17¾	Inches
Area	174	Sq. Inches
Neck Length	5⅛ ± ⅛	Inches
Overall Length	12⅝ ± 5/16	Inches
Bulb	C149 Exp. #5 or Equiv.	
Safety Plate	FP159A	
Bulb Contact (Recessed Small Cavity Cap)	J1-21	
Base	B7-208	
Basing	8HR	
Weight (Approx.)	18½	Pounds

RATINGS

MAXIMUM RATINGS (Design Maximum Values) Grid Drive Service

Maximum Anode Voltage	20,000	Volts	dc
Minimum Anode Voltage	12,000	Volts	dc
Grid No. 4 Voltage (Focusing Electrode)	−550 to +1100	Volts	dc
Grid No. 2 Voltage	550	Volts	dc
Grid No. 1 Voltage			
Negative Bias Value	155	Volts	dc
Negative Peak Value	220	Volts	
Positive Bias Value	0	Volts	dc
Positive Peak Value	2	Volts	
Peak Heater-Cathode Voltage			
Heater Negative with Respect to Cathode			
During Warm-up Period not to Exceed 15 Seconds	450	Volts	
After Equipment Warm-up Period	200	Volts	
Heater Positive with Respect to Cathode	200	Volts	

QUICK REFERENCE DATA

Television Picture Tube
19" Direct Viewed
Rectangular Glass Type
Spherical Faceplate
Bonded Shield
Gray Filter Glass
Aluminized Screen
Electrostatic Focus
114° Magnetic Deflection
No Ion Trap
External Conductive Coating

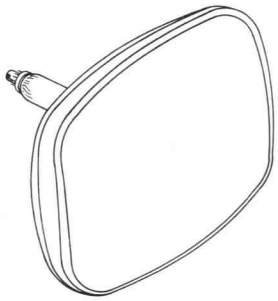

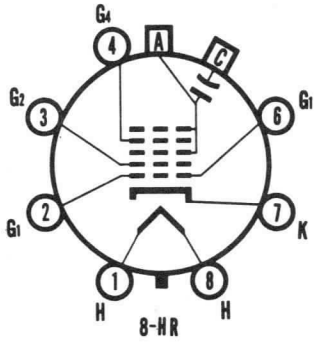

SYLVANIA
ELECTRONIC TUBES
A Division of
Sylvania Electric Products Inc.
PICTURE TUBE OPERATIONS
SENECA FALLS, NEW YORK

Prepared and Released By The
TECHNICAL PUBLICATIONS SECTION
EMPORIUM, PENNSYLVANIA

FEBRUARY, 1961

File Under
TELEVISION PICTURE TUBES

TYPICAL OPERATING CONDITIONS (Grid Drive Service)

Anode Voltage	16,000 Volts	dc
Grid No. 4 Voltage for Focus	0 to +400 Volts	dc
Grid No. 2 Voltage	300 Volts	dc
Grid No. 1 Voltage Required for Cutoff[3]	−35 to −72 Volts	dc

CIRCUIT VALUES

Grid No. 1 Circuit Resistance	1.5 Megohms Max.

NOTES:

1. *Heater warm-up time is defined as the time required for the voltage across the heater to reach 80% of the rated heater voltage after applying four (4) times rated heater voltage to a circuit consisting of the tube heater in series with a resistance equal to three (3) times the rated heater voltage divided by the rated heater current.*
2. *External conductive coating must be grounded.*
3. *Visual extinction of focused raster. Extinction of stationary focused spot will require that these values be about 5 volts more negative.*

WARNING:

X-ray radiation shielding may be necessary to protect against possible danger of personal injury from prolonged exposure at close range if this tube is operated at higher than the manufacturer's Maximum Rated Anode Voltage or 16,000 volts, whichever is less.

OUTLINE

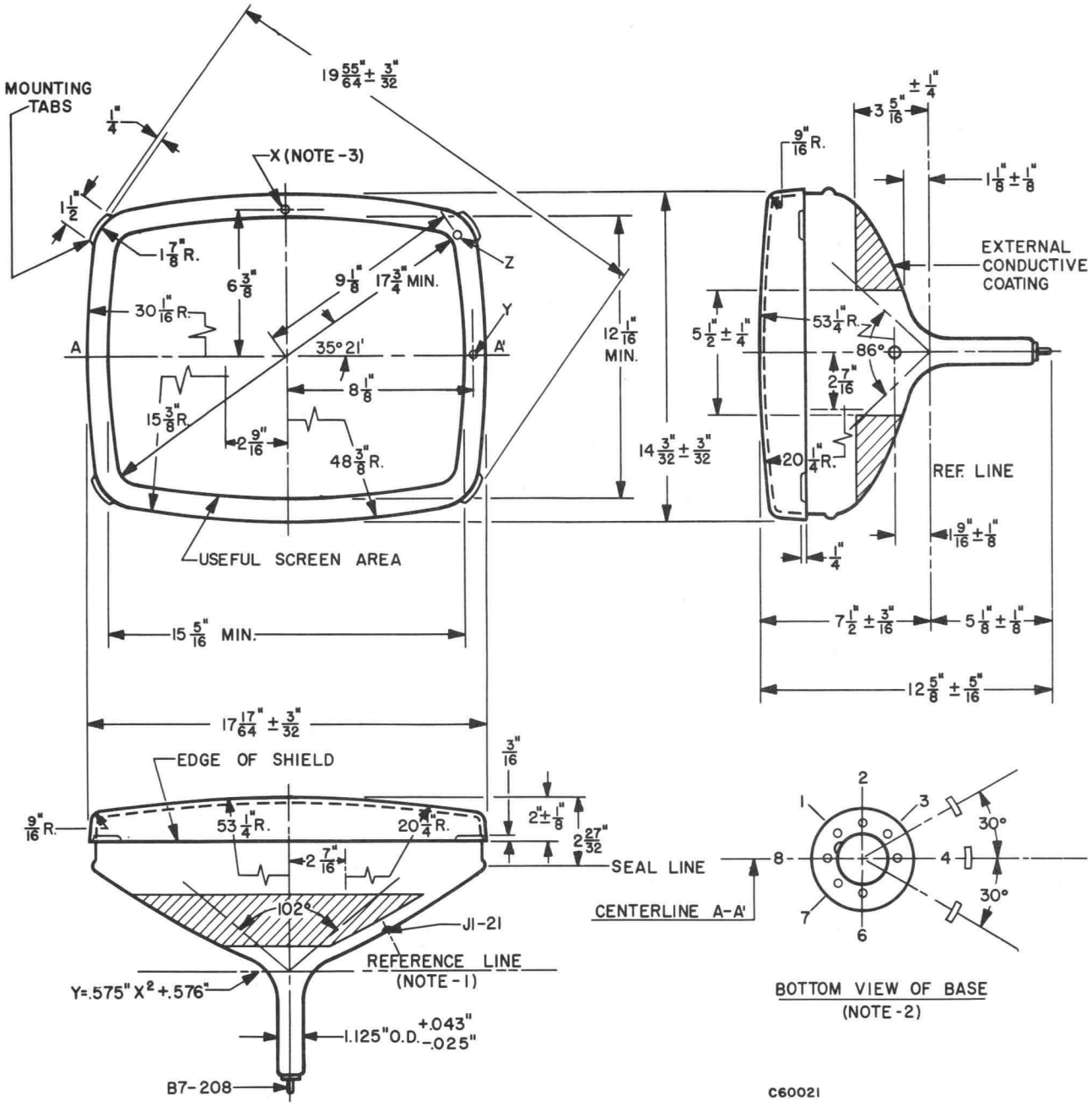

DIAGRAM NOTES

1. *Reference line is determined by plane C-C' of JEDEC No. 126 Reference Line Gauge, when the gauge is seated against the bulb.*
2. *Base Pin No. 4 aligns with horizontal centerline (A-A') within 30° and is on same side as anode contact, J1-21.*
3. *Planes perpendicular to tube axis and passing through points X, Y and Z are located as follows:*

   Plane tangent to crown of face to plane of X: 0.500" Nominal

   Plane of X to plane of Y = .421" ± .025"

   Plane of X to plane of Z = .738" ± .045"

CHARACTERISTICS

GENERAL DATA

Focusing Method	Electrostatic	
Deflection Method	Magnetic	
Deflection Angles (Approx.)		
Horizontal	102	Degrees
Diagonal	114	Degrees
Vertical	86	Degrees
Phosphor	Aluminized P4	
Fluorescence	White	
Persistence	Short to Medium	
Faceplate	Bonded Shield	
(Gray Filter Glass Safety Plate Laminated Directly to Face of Tube)		
Light Transmittance of Faceplate Assembly (Approx.)	44	Percent

ELECTRICAL DATA

Heater Voltage	6.3	Volts
Heater Current	0.30 ± 5%	Ampere
Heater Warm-up Time[1]	11	Seconds
Direct Interelectrode Capacitances (Approx.)		
Cathode to All Other Electrodes	5	μμf
Grid No. 1 to All Other Electrodes	6	μμf
External Conductive Coating to Anode[2]	1500	μμf Max.
	1000	μμf Min.

MECHANICAL DATA

Minimum Useful Screen Dimensions (Maximum Assured)		
Height	12 1/16	Inches
Width	15 5/16	Inches
Diagonal	17¾	Inches
Area	174	Sq. Inches
Neck Length	5⅛ ± ⅛	Inches
Overall Length	12⅝ ± 5/16	Inches
Bulb	C149 Exp. #5 or Equiv.	
Safety Plate	FP159A	
Bulb Contact (Recessed Small Cavity Cap)	J1-21	
Base	B7-208	
Basing	8HR	
Weight (Approx.)	18½	Pounds

RATINGS

MAXIMUM RATINGS (Design Maximum Values) Grid Drive Service

Maximum Anode Voltage	20,000 Volts	dc
Minimum Anode Voltage	12,000 Volts	dc
Grid No. 4 Voltage (Focusing Electrode)	−550 to +1100 Volts	dc
Grid No. 2 Voltage	550 Volts	dc
Grid No. 1 Voltage		
Negative Bias Value	155 Volts	dc
Negative Peak Value	220 Volts	
Positive Bias Value	0 Volts	dc
Positive Peak Value	2 Volts	
Peak Heater-Cathode Voltage		
Heater Negative with Respect to Cathode		
During Warm-up Period not to Exceed 15 Seconds	450 Volts	
After Equipment Warm-up Period	200 Volts	
Heater Positive with Respect to Cathode	200 Volts	

QUICK REFERENCE DATA

Television Picture Tube
19" Direct Viewed
Rectangular Glass Type
Spherical Faceplate
Bonded Shield
Gray Filter Glass
Aluminized Screen
Electrostatic Focus
114° Magnetic Deflection
No Ion Trap
External Conductive Coating
300 Ma Heater

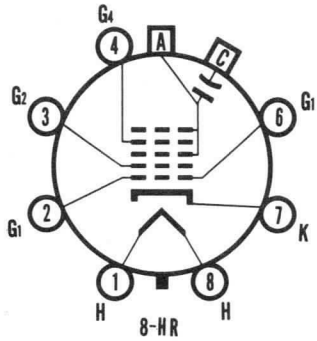

SYLVANIA
ELECTRONIC TUBES
A Division of
Sylvania Electric Products Inc.
PICTURE TUBE OPERATIONS
SENECA FALLS, NEW YORK

Prepared and Released By The
TECHNICAL PUBLICATIONS SECTION
EMPORIUM, PENNSYLVANIA

FEBRUARY, 1961

File Under
TELEVISION PICTURE TUBES

TYPICAL OPERATING CONDITIONS (Grid Drive Service)

Anode Voltage	16,000 Volts	dc
Grid No. 4 Voltage for Focus	0 to +400 Volts	dc
Grid No. 2 Voltage	300 Volts	dc
Grid No. 1 Voltage Required for Cutoff[3]	−35 to −72 Volts	dc

CIRCUIT VALUES

Grid No. 1 Circuit Resistance	1.5 Megohms Max.

NOTES:

1. *Heater warm-up time is defined as the time required for the voltage across the heater to reach 80% of the rated heater voltage after applying four (4) times rated heater voltage to a circuit consisting of the tube heater in series with a resistance equal to three (3) times the rated heater voltage divided by the rated heater current.*
2. *External conductive coating must be grounded.*
3. *Visual extinction of focused raster. Extinction of stationary focused spot will require that these values be about 5 volts. more negative.*

WARNING:

X-ray radiation shielding may be necessary to protect against possible danger of personal injury from prolonged exposure at close range if this tube is operated at higher than the manufacturer's Maximum Rated Anode Voltage or 16,000 volts, whichever is less.

OUTLINE

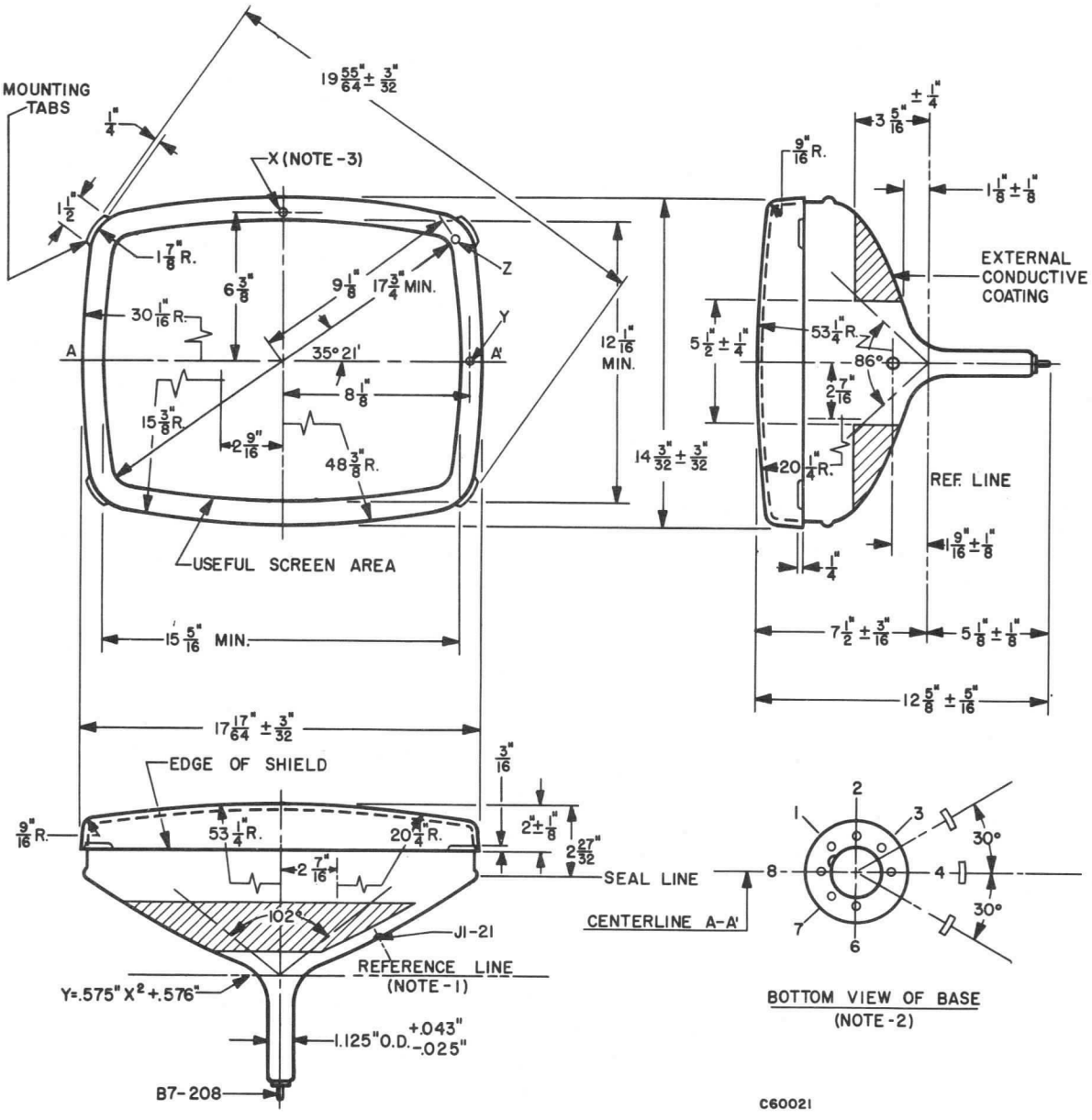

DIAGRAM NOTES:

1. *Reference line is determined by place C-C' of JEDEC No. 126 Reference Line Gauge, when the gauge is seated against the bulb.*
2. *Base Pin No. 4 aligns with horizontal centerline (A-A') within 30° and is on same side as anode contact, J1-21.*
3. *Planes perpendicular to tube axis and passing through points X, Y and Z are located as follows:*

   Plane tangent to crown of face to plane of X: 0.500" Nominal

   Plane of X to plane of Y = .421" ± .025"

   Plane of X to plane of Z = .738" ± .045"

CHARACTERISTICS

GENERAL DATA

Focusing Method	Tri-Potential Electrostatic
Deflection Method	Magnetic
Deflection Angles (Approx.)	
Horizontal	102 Degrees
Diagonal	114 Degrees
Vertical	86 Degrees
Phosphor	Aluminized P4
Fluorescence	White
Persistence	Short to Medium
Faceplate	Bonded Shield
(Gray Filter Glass Safety Plate Laminated Directly to Face of Tube)	
Light Transmittance of Faceplate Assembly (Approx.)	44 Percent

ELECTRICAL DATA

Heater Voltage	6.3 Volts	
Heater Current	0.60 ± 5% Ampere	
Heater Warm-up Time[1]	11 Seconds	
Direct Interelectrode Capacitances (Approx.)		
Cathode to All Other Electrodes	5 μμf	
Grid No. 1 to All Other Electrodes	6 μμf	
External Conductive Coating to Anode[2]	1500 μμf	Max.
	1000 μμf	Min.

MECHANICAL DATA

Minimum Useful Screen Dimensions (Maximum Assured)	
Height	12 1/16 Inches
Width	15 5/16 Inches
Diagonal	17¾ Inches
Area	174 Sq. Inches
Neck Length	3 9/16 ± ⅛ Inches
Overall Length	11 1/16 ± 5/16 Inches
Bulb	C149 Exp. #5 or Equiv.
Safety Plate	FP159A
Bulb Contact (Recessed Small Cavity Cap)	J1-21
Base	B7-208
Basing	8JR
Weight (Approx.)	18½ Pounds

RATINGS

MAXIMUM RATINGS (Design Maximum Values) Grid Drive Service

Maximum Anode Voltage	20,000 Volts	dc
Minimum Anode Voltage	12,000 Volts	dc
Grid No. 3 Voltage (Focusing Electrode)	700 Volts	dc
Grid No. 2 Voltage	600 Volts	dc
Grid No. 1 Voltage		
Negative Bias Value	155 Volts	dc
Negative Peak Value	220 Volts	
Positive Bias Value	0 Volts	dc
Positive Peak Value	2 Volts	
Peak Heater-Cathode Voltage		
Heater Negative with Respect to Cathode		
During Warm-up Period not to Exceed 15 Seconds	450 Volts	
After Equipment Warm-up Period	200 Volts	
Heater Positive with Respect to Cathode	200 Volts	

QUICK REFERENCE DATA

Television Picture Tube
19″ Direct Viewed
Rectangular Glass Type
Spherical Faceplate
Bonded Shield
Gray Filter Glass
Aluminized Screen
Tri-Potential Electrostatic Focus
114° Magnetic Deflection
No Ion Trap
External Conductive Coating

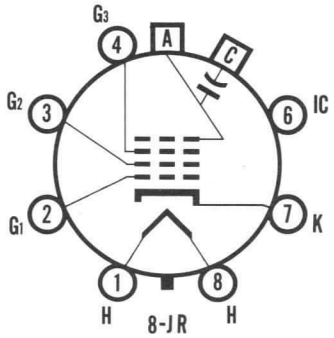

SYLVANIA
ELECTRONIC TUBES
A Division of
Sylvania Electric Products Inc.
PICTURE TUBE OPERATIONS
SENECA FALLS, NEW YORK

Prepared and Released By The
TECHNICAL PUBLICATIONS SECTION
EMPORIUM, PENNSYLVANIA

FEBRUARY, 1961

File Under
TELEVISION PICTURE TUBES

TYPICAL OPERATING CONDITIONS (Grid Drive Service)

Anode Voltage	16,000 Volts	dc
Grid No. 3 Voltage for Focus	0 to +400 Volts	dc
Grid No. 2 Voltage	500 Volts	dc
Grid No. 1 Voltage Required for Cutoff[3]	−43 to −78 Volts	dc

CIRCUIT VALUES

Grid No. 1 Circuit Resistance	1.5 Megohms Max.

NOTES:

1. *Heater warm-up time is defined as the time required for the voltage across the heater to reach 80% of the rated heater voltage after applying four (4) times rated heater voltage to a circuit consisting of the tube heater in series with a resistance equal to three (3) times the rated heater voltage divided by the rated heater current.*
2. *External conductive coating must be grounded.*
3. *Visual extinction of focused raster. Extinction of stationary focused spot will require that these values be about 5 volts. more negative.*

WARNING:

X-ray radiation shielding may be necessary to protect against possible danger of personal injury from prolonged exposure at close range if this tube is operated at higher than the manufacturer's Maximum Rated Anode Voltage or 16,000 volts, whichever is less.

OUTLINE

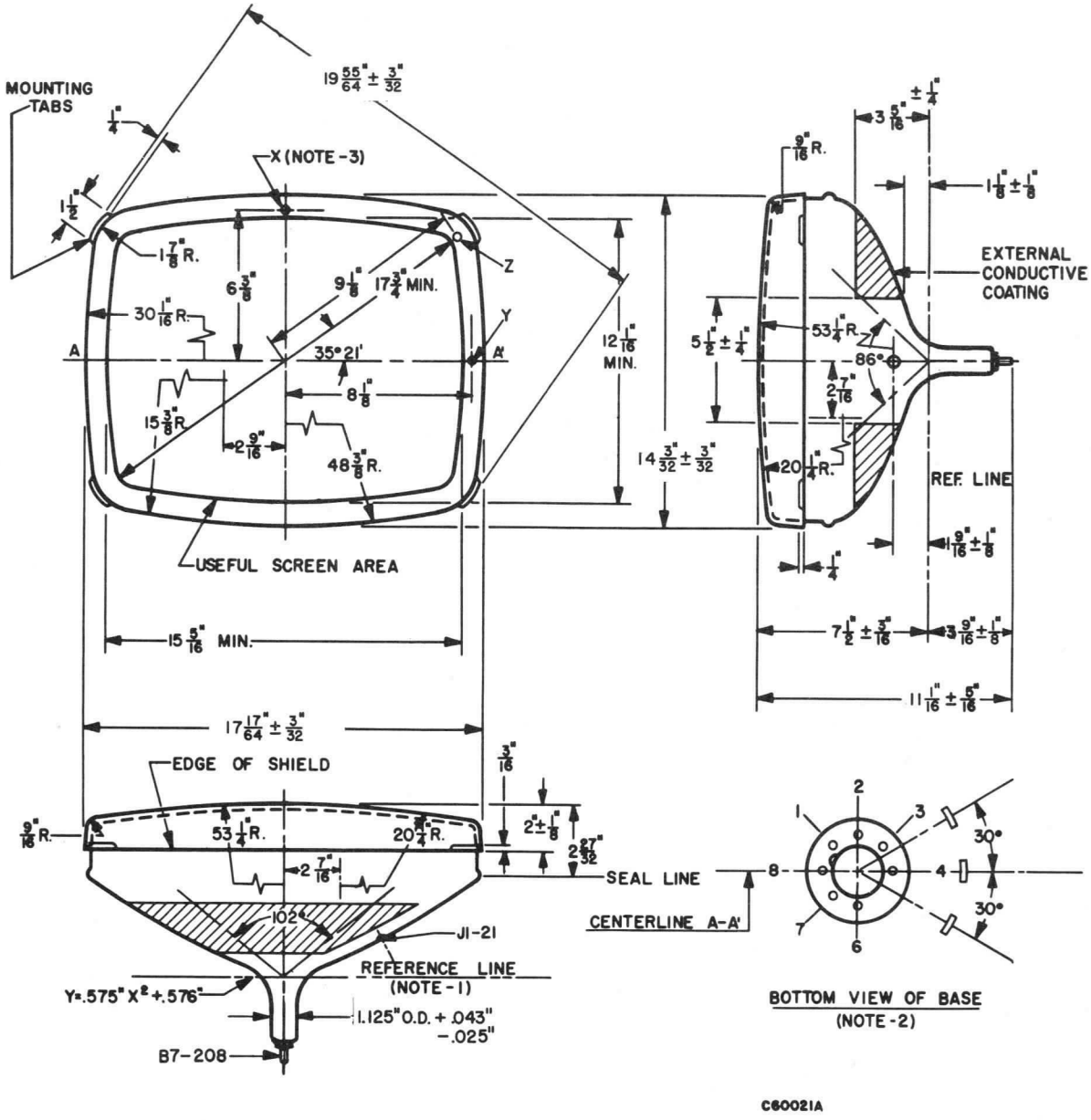

DIAGRAM NOTES:

1. *Reference line is determined by plane C-C' of JEDEC No. 126 Reference Line Gauge, when the gauge is seated against the bulb.*
2. *Base Pin No. 4 aligns with horizontal centerline (A-A') within 30° and is on same side as anode contact, J1-21.*
3. *Planes perpendicular to tube axis and passing through points X, Y and Z are located as follows:*

   Plane tangent to crown of face to plane of X: 0.500" Nominal
   Plane of X to plane of Y = .421" ± .025"
   Plane of X to plane of Z = .738" ± .045"

SYLVANIA

engineering data service

SYLVANIA 19BNP4, 19BQP4

CHARACTERISTICS

GENERAL DATA

Focusing Method	Electrostatic
Deflection Method	Magnetic
Deflection Angles (Approx.)	
Horizontal	102 Degrees
Diagonal	114 Degrees
Vertical	86 Degrees
Phosphor	Aluminized P4
Fluorescence	White
Persistence	Short to Medium
Faceplate	Bonded Shield
(Gray Filter Glass Safety Plate Laminated Directly to Face of Tube)	
Light Transmittance of Faceplate Assembly (Approx.)	44 Percent
19BQP4: External Surface of Safety Plate Treated to Reduce Specular Reflection	

ELECTRICAL DATA

Heater Voltage	6.3 Volts	
Heater Current	0.60 ± 5 % Ampere	
Heater Warm-up Time[1]	11 Seconds	
Direct Interelectrode Capacitances (Approx.)		
Cathode to All Other Electrodes	5 μμf	
Grid No. 1 to All Other Electrodes	6 μμf	
External Conductive Coating to Anode[2]	1500 μμf	Max.
	1000 μμf	Min.

MECHANICAL DATA

Minimum Useful Screen Dimensions (Maximum Assured)	
Height	12 1/16 Inches
Width	15 ¼ Inches
Diagonal	17 5/8 Inches
Area	172 Sq. Inches
Neck Length	5 1/8 ± 1/8 Inches
Overall Length	12 5/8 ± 5/16 Inches
Bulb	J149C
Safety Plate	
19BNP4	FP159A
19BQP4	FP159B
Bulb Contact (Recessed Small Cavity Cap)	J1-21
Base	B7-208
Basing	8HR
Weight (Approx.)	18 ½ Pounds

QUICK REFERENCE DATA

Television Picture Tube
19" Direct Viewed
Rectangular Glass Type
Spherical Faceplate
Bonded Shield
Gray Filter Glass
Aluminized Screen
Electrostatic Focus
114° Magnetic Deflection
External Conductive Coating
19BQP4: Anti-Reflection Treated

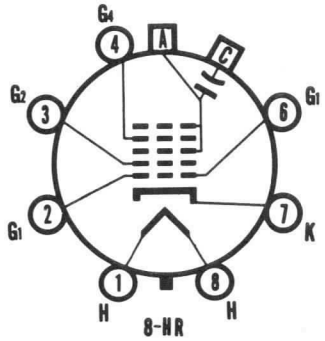

SYLVANIA
ELECTRONIC TUBES
A Division of
Sylvania Electric Products Inc.
PICTURE TUBE
OPERATIONS
SENECA FALLS, NEW YORK

Prepared and Released By The
TECHNICAL PUBLICATIONS SECTION
EMPORIUM, PENNSYLVANIA
MAY, 1962

File Under
TELEVISION PICTURE TUBES

RATINGS

MAXIMUM RATINGS (Design Maximum Values) Cathode Drive Service[3]

Maximum Anode Voltage	20,000 Volts	dc
Minimum Anode Voltage	12,000 Volts	dc
Grid No. 4 Voltage (Focusing Electrode)	−550 to +1100 Volts	dc
Grid No. 2 Voltage	70 Volts	dc
Cathode Voltage		
Negative Bias Value	0 Volts	dc
Negative Peak Value	2 Volts	
Positive Bias Value	155 Volts	dc
Positive Peak Value	220 Volts	
Peak Heater-Cathode Voltage		
Heater Negative with Respect to Cathode		
During Warm-up Period Not to Exceed 15 Seconds	450 Volts	
After Equipment Warm-up Period	200 Volts	
Heater Positive with Respect to Cathode	200 Volts	

TYPICAL OPERATING CONDITIONS, Cathode Drive Service[3]

Anode Voltage	16,000 Volts	dc
Grid No. 4 Voltage for Focus	0 to +400 Volts	ds
Grid No. 2 Voltage	50 Volts	dc
Cathode Voltage Required for Cutoff[4]	+32 to +50 Volts	dc

CIRCUIT VALUES

Grid No. 1 Circuit Resistance	1.5 Megohms Max.

NOTES:

1. *Heater warm-up time is defined as the time required for the voltage across the heater to reach 80 % of the rated heater voltage after applying four (4) times rated heater voltage to a circuit consisting of the tube heater in series with a resistance equal to three (3) times the rated heater voltage divided by the rated heater current.*
2. *External conductive coating must be grounded.*
3. *Voltages are positive with respect to Grid No. 1 Voltage, unless otherwise indicated.*
4. *Visual extinction of focused raster. Extinction of stationary focused spot will require that these values be about 5 volts more positive.*

WARNING:

X-ray radiation shielding may be necessary to protect against possible danger of personal injury from prolonged exposure at close range if this tube is operated at higher than the manufacturer's Maximum Rated Anode Voltage or 16,000 volts, whichever is less.

OUTLINE

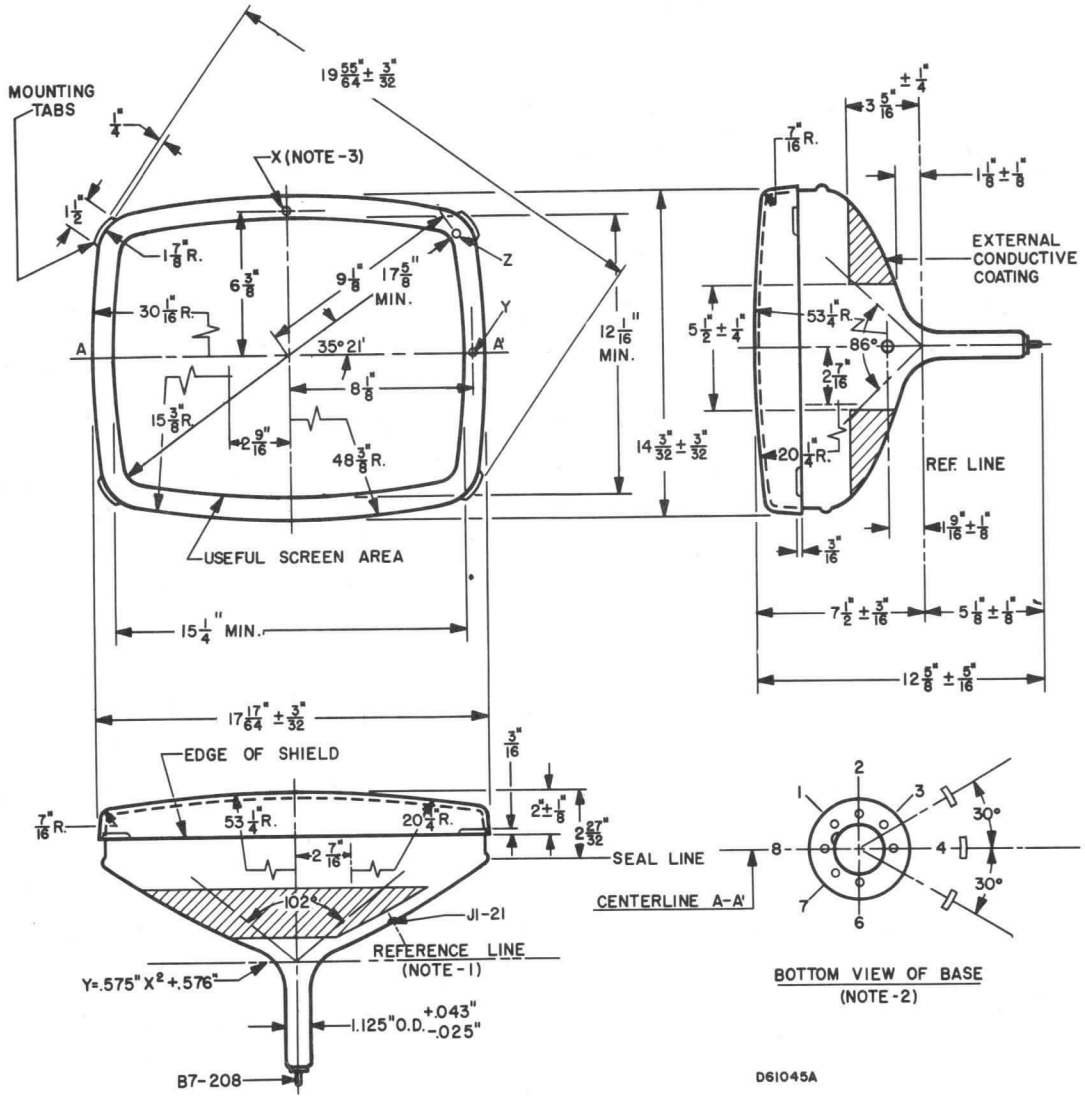

DIAGRAM NOTES:

1. *Reference line is determined by plane C-C' of JEDEC No. 126 Reference Line Gauge, when the gauge is seated against the bulb.*
2. *Base Pin No. 4 aligns with horizontal centerline (A-A') within 30° and is on same side as anode contact, J1-21.*
3. *Planes perpendicular to tube axis and passing through Points X, Y, and Z are located as follows:*

   Plane tangent to crown of face to plane of X: 0.531" Nominal

   Plane of X to plane of Y = .421" ± .025"

   Plane of X to plane of Z = .738" ± .045"

CHARACTERISTICS

GENERAL DATA

Focusing Method	Electrostatic
Deflection Method	Magnetic
Deflection Angles (Approx.)	
Horizontal	81 Degrees
Diagonal	92 Degrees
Vertical	67 Degrees
Phosphor	Aluminized P4
Fluorescence	White
Persistence	Short to Medium
Faceplate	Bonded Shield
(Gray Filter Glass Safety Plate Laminated Directly to Face of Tube)	
Light Transmittance of Faceplate Assembly (Approx.)	44 Percent
External Surface Treated to Reduce Specular Reflection	

ELECTRICAL DATA

Heater Voltage	6.3 Volts	
Heater Current	0.60 ± 5 % Ampere	
Heater Warm-up Time[1]	11 Seconds	
Direct Interelectrode Capacitances (Approx.)		
Cathode to All Other Electrodes	5 μμf	
Grid No. 1 to All Other Electrodes	6 μμf	
External Conductive Coating to Anode[2]	1700 μμf	Max.
	1400 μμf	Min.

MECHANICAL DATA

Minimum Useful Screen Dimensions (Maximum Assured)	
Height	12 1/16 Inches
Width	15 1/4 Inches
Diagonal	17 5/8 Inches
Area	172 Sq. Inches
Neck Length	5 1/2 ± 3/16 Inches
Overall Length	15 1/2 ± 3/8 Inches
Bulb	J149D
Safety Plate	FP159B
Bulb Contact (Recessed Small Cavity Cap)	J1-21
Base	B6-203
Basing	12L
Weight (Approx.)	20 Pounds

RATINGS

MAXIMUM RATINGS (Design Maximum Values) Grid Drive Service

Maximum Anode Voltage	20,000 Volts	dc
Minimum Anode Voltage	11,000 Volts	dc
Grid No. 4 Voltage (Focusing Electrode)	−550 to +1100 Volts	dc
Grid No. 2 Voltage	550 Volts	dc
Grid No. 1 Voltage		
Negative Bias Value	155 Volts	dc
Negative Peak Value	220 Volts	
Positive Bias Value	0 Volts	dc
Positive Peak Value	2 Volts	
Peak Heater-Cathode Voltage		
Heater Negative with Respect to Cathode		
During Warm-up Period not to Exceed 15 Seconds	450 Volts	
After Equipment Warm-up Period	200 Volts	
Heater Positive with Respect to Cathode	200 Volts	

QUICK REFERENCE DATA

Television Picture Tube
19″ Direct Viewed
Rectangular Glass Type
Bonded Shield
Gray Filter Glass
Anti-Reflection Treated
Aluminized Screen
Electrostatic Focus
92° Magnetic Deflection
No Ion Trap
External Conductive Coating

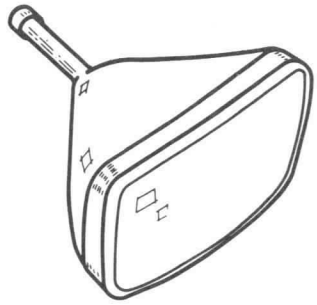

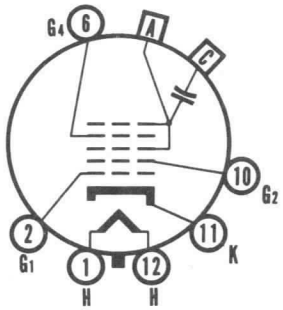

12-L

SYLVANIA
ELECTRONIC TUBES
A Division of
Sylvania Electric Products Inc.
PICTURE TUBE
OPERATIONS
SENECA FALLS, NEW YORK

Prepared and Released By The
TECHNICAL PUBLICATIONS SECTION
EMPORIUM, PENNSYLVANIA
MARCH, 1962

File Under
TELEVISION PICTURE TUBES

TYPICAL OPERATING CONDITIONS, Grid Drive Service

Anode Voltage	16,000 Volts	dc
Grid No. 4 Voltage for Focus	0 to +400 Volts	dc
Grid No. 2 Voltage	300 Volts	dc
Grid No. 1 Voltage Required for Cutoff[3]	−35 to −72 Volts	dc

CIRCUIT VALUES

Grid No. 1 Circuit Resistance	1.5 Megohms Max.

NOTES:

1. *Heater warm-up time is defined as the time required for the voltage across the heater to reach 80 % of the rated heater voltage after applying four (4) times rated heater voltage to a circuit consisting of the tube heater in series with a resistance equal to three (3) times the rated heater voltage divided by the rated heater current.*
2. *External conductive coating must be grounded.*
3. *Visual extinction of focused raster. Extinction of stationary focused spot will require that these values be about 5 volts more negative.*

WARNING:

X-ray radiation shielding may be necessary to protect against possible danger of personal injury from prolonged exposure at close range if this tube is operated at higher than the manufacturer's Maximum Rated Anode Voltage or 16,000 volts, whichever is less.

OUTLINE

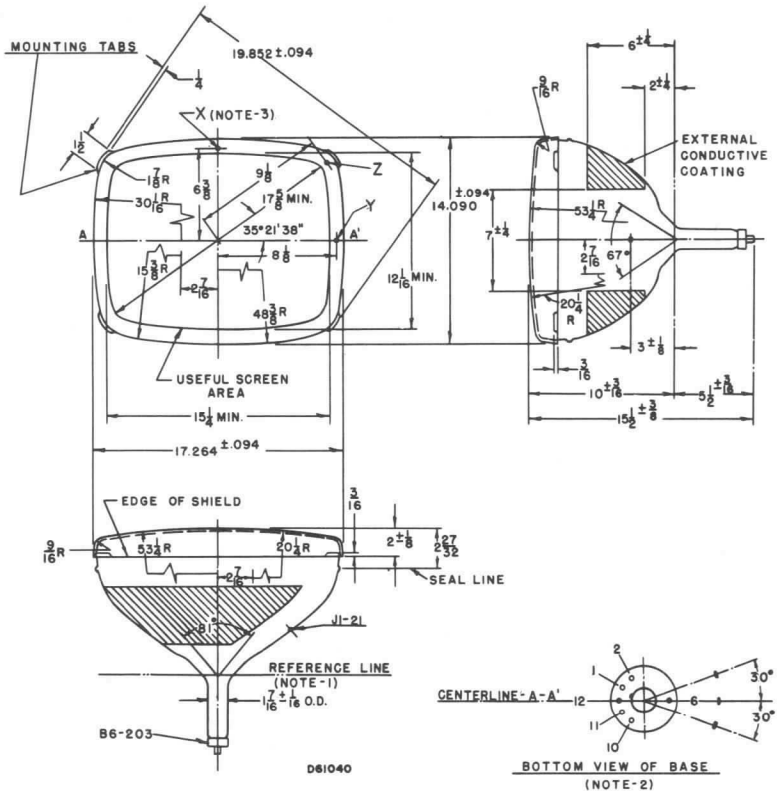

DIAGRAM NOTES:

1. *Reference line is determined by plane C-C' of JEDEC No. 116 Reference Line Gauge, when the gauge is seated against the bulb.*
2. *Base pin No. 6 aligns with horizontal centerline (A-A') within 30° and is on same side as anode contact, J1-21.*
3. *Planes perpendicular to the tube axis and passing through points X, Y, and Z are as follows:*
   Plane tangent to crown of face to plane of X: 0.500 nom.
   Plane of X to plane of Y: 0.421" ± .025"
   Plane of X to plane of Z: 0.738" ± .045"
4. *Dimensions are in inches.*

CHARACTERISTICS

GENERAL DATA

Focusing Method	Electrostatic
Deflection Method	Magnetic
Deflection Angles (Approx.)	
Horizontal	101 Degrees
Diagonal	114 Degrees
Vertical	86 Degrees
Phosphor	Aluminized P4
Fluorescence	White
Persistence	Medium Short
Faceplate	Gray Filter Glass
Light Transmittance (Approx.)	78 Percent

ELECTRICAL DATA

Heater Voltage	6.3 Volts	
Heater Current	0.60 ± 5 % Ampere	
Heater Warm-up Time[1]	11 Seconds	
Direct Interelectrode Capacitances (Approx.)		
Cathode to All Other Electrodes	5 pf	
Grid No. 1 to All Other Electrodes	6 pf	
External Conductive Coating to Anode[2]	1500 pf	Max.
	1000 pf	Min.

MECHANICAL DATA

Minimum Useful Screen Dimensions (Maximum Assured)	
Height	12 Inches
Width	15 1/8 Inches
Diagonal	17 9/16 Inches
Minimum Useful Screen Area	172 Sq. Inches
Neck Length	4 3/8 ± 1/8 Inches
Overall Length	11 5/8 ± 1/4 Inches
Bulb	J149A
Bulb Contact (Recessed Small Cavity Cap)	J1-21
Base	B7-208
Basing	8HR
Weight (Approx.)	13 ½ Pounds

RATINGS

MAXIMUM RATINGS (Design Maximum Values)

Cathode Drive Service[3]		
Maximum Anode Voltage	20,000 Volts	dc
Minimum Anode Voltage	10,000 Volts	dc
Grid No. 4 Voltage (Focusing Electrode)	−400 to +1250 Volts	dc
Maximum Grid No. 2 Voltage	70 Volts	dc
Minimum Grid No. 2 Voltage	40 Volts	dc
Cathode Voltage		
Positive Bias Value	100 Volts	dc
Positive Peak Value	150 Volts	
Negative Bias Value	0 Volt	dc
Negative Peak Value	2 Volts	
Peak Heater-Cathode Voltage		
Heater Negative with Respect to Cathode During Warm-up Period Not to Exceed 15 Seconds	450 Volts	
After Equipment Warm-up Period	200 Volts	
Heater Positive with Respect to Cathode	200 Volts	

QUICK REFERENCE DATA

Television Picture Tube
19″ Direct Viewed
Rectangular Glass Type
Spherical Faceplate
Gray Filter Glass
Aluminized Screen
Electrostatic Focus
114° Magnetic Deflection
1⅛″ Neck Diameter
No Ion Trap
External Conductive Coating
Low Grid No. 2 Voltage

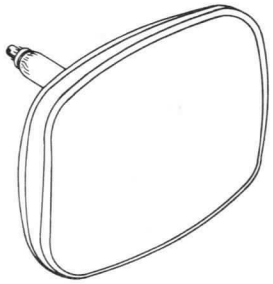

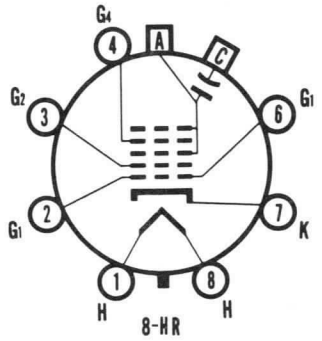

SYLVANIA
ELECTRONIC TUBES
A Division of
Sylvania Electric Products Inc.
PICTURE TUBE
OPERATIONS
SENECA FALLS, NEW YORK

Prepared and Released By The
TECHNICAL PUBLICATIONS SECTION
EMPORIUM, PENNSYLVANIA
DECEMBER, 1963

File Under
TELEVISION PICTURE TUBES

TYPICAL OPERATING CONDITIONS

Cathode Drive Service[3]

Anode Voltage	16,000 Volts	dc
Grid No. 4 Voltage for Focus	0 to 400 Volts	dc
Grid No. 2 Voltage	50 Volts	dc
Cathode Voltage Required for Cutoff[4]	32 to 50 Volts	dc

CIRCUIT VALUES

Grid No. 1 Circuit Resistance	1.5 Megohms Max.

NOTES:

1. *Heater warm-up time is defined as the time required for the voltage across the heater to reach 80 % of the rated heater voltage after applying four (4) times rated heater voltage to a circuit consisting of the tube heater in series with a resistance equal to three (3) times the rated heater voltage divided by the heater current.*
2. *External conductive coating must be grounded.*
3. *Voltages are positive with respect to Grid 1 unless indicated otherwise.*
4. *Visual extinction of focused raster. For cutoff of the undeflected focused spot, the absolute value of the bias between cathode and grid will increase by about 5 volts.*

WARNING:

X-ray radiation shielding may be necessary to protect against possible danger of personal injury from prolonged exposure at close range if this tube is operated at higher than the manufacturer's Maximum Rated Anode Voltage or 16,000 volts, whichever is less.

OUTLINE

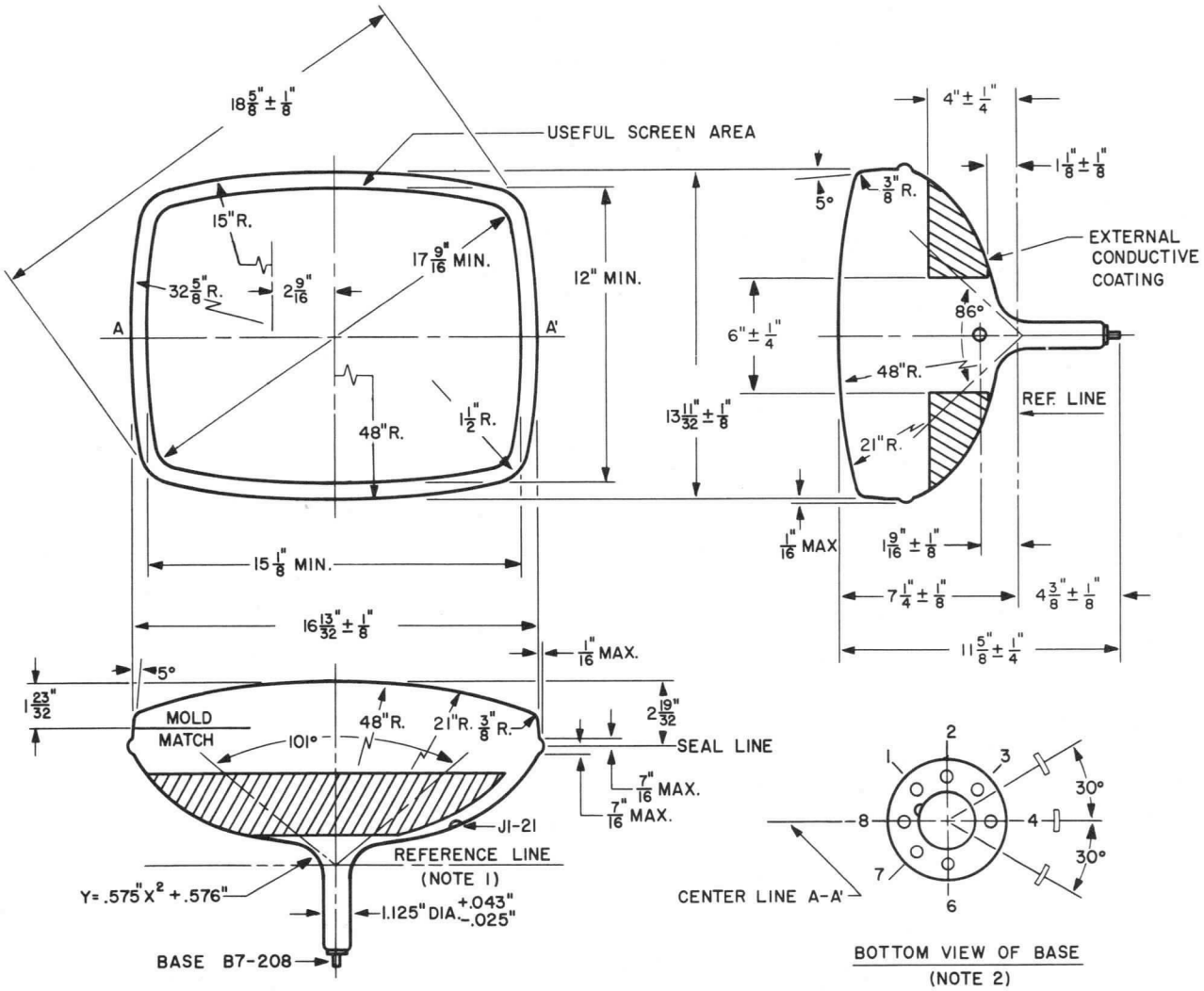

D63035

DIAGRAM NOTES:

1. *Reference Line is determined by plane C-C' of JEDEC No. 126 Reference Line Gauge, when the gauge is seated against the bulb.*
2. *Base Pin No. 4 aligns with horizontal centerline (A-A') within 30° and is on same side as anode contact, J1-21.*

CHARACTERISTICS

GENERAL DATA

Focusing Method	Electrostatic
Deflection Method	Magnetic
Deflection Angles (Approx.)	
Horizontal	102 Degrees
Diagonal	114 Degrees
Vertical	86 Degrees
Phosphor	Aluminized P4
Fluorescence	White
Persistence	Medium Short
Faceplate	Bonded Shield
(Gray Filter Glass Safety Plate Laminated Directly to Face of Tube)	
Light Transmittance of Faceplate Assembly (Approx.)	44 Percent

ELECTRICAL DATA

Heater Voltage	6.3 Volts	
Heater Current	0.45 ± 5 % Ampere	
Heater Warm-up Time[1]	11 Seconds	
Direct Interelectrode Capacitances (Approx.)		
Cathode to All Other Electrodes	5 pf	
Grid No. 1 to All Other Electrodes	6 pf	
External Conductive Coating to Anode[2]	2100 pf	Max.
	1700 pf	Min.

MECHANICAL DATA

Minimum Useful Screen Dimensions (Maximum Assured)	
Height	12 1/16 Inches
Width	15 1/4 Inches
Diagonal	17 5/8 Inches
Area	172 Sq. Inches
Neck Length	4 1/8 ± 1/8 Inches
Overall Length	11 5/8 ± 5/16 Inches
Bulb	J149C
Safety Plate	FP159A
Bulb Contact (Recessed Small Cavity Cap)	J1-21
Base	B7-208
Basing	8HR
Weight (Approx.)	18 ½ Pounds

RATINGS

MAXIMUM RATINGS (Design Maximum Values)

Cathode Drive Service[3]		
Maximum Anode Voltage	23,000 Volts	dc
Minimum Anode Voltage	15,000 Volts	dc
Grid No. 4 Voltage (Focusing Electrode)	−400 to +1250 Volts	dc
Grid No. 2 Voltage	70 Volts	dc
Cathode Voltage		
Positive Bias Value	100 Volts	dc
Positive Peak Value	150 Volts	
Negative Bias Value	0 Volt	
Negative Peak Value	2 Volts	dc
Peak Heater-Cathode Voltage		
Heater Negative with Respect to Cathode During Warm-up Period not to Exceed 15 Seconds	450 Volts	
After Equipment Warm-up Period	200 Volts	
Heater Positive with Respect to Cathode	200 Volts	

QUICK REFERENCE DATA

Television Picture Tube
19″ Direct Viewed
Rectangular Glass Type
Bonded Shield
Gray Filter Glass
Aluminized Screen
Neck Length 4 1/8″
Electrostatic Focus
114° Magnetic Deflection
No Ion Trap
External Conductive Coating
6.3 Volt, 450 Ma Heater
Low Grid No. 2 Voltage

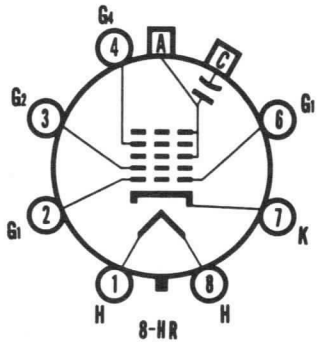

SYLVANIA
ELECTRONIC TUBES
A Division of
Sylvania Electric Products Inc.
PICTURE TUBE
OPERATIONS
SENECA FALLS, NEW YORK

Prepared and Released By The
TECHNICAL PUBLICATIONS SECTION
EMPORIUM, PENNSYLVANIA
SEPTEMBER, 1963

File Under
TELEVISION PICTURE TUBES

TYPICAL OPERATING CONDITIONS

Cathode Drive Service[3]		
Anode Voltage	16,000 Volts	dc
Grid No. 4 Voltage for Focus	0 to +400 Volts	dc
Grid No. 2 Voltage[3]	50 Volts	dc
Cathode Voltage Required for Cutoff[4]	+32 to +50 Volts	dc

CIRCUIT VALUES

Grid No. 1 Circuit Resistance	1.5 Megohms Max.

NOTES:

1. *Heater warm-up time is defined as the time required for the voltage across the heater to reach 80 % of the rated heater voltage after applying four (4) times rated heater voltage to a circuit consisting of the tube heater in series with a resistance equal to three (3) times the rated heater voltage divided by the rated heater current.*
2. *External conductive coating must be grounded.*
3. *Voltages are positive with respect to Grid No. 1 unless indicated otherwise.*
4. *Visual extinction of focused raster. Extinction of stationary focused spot will require that these values be about 5 volts more positive.*

WARNING:

X-ray radiation shielding may be necessary to protect against possible danger of personal injury from prolonged exposure at close range if this tube is operated at higher than the manufacturer's Maximum Rated Anode Voltage or 16,000 volts, whichever is less.

OUTLINE

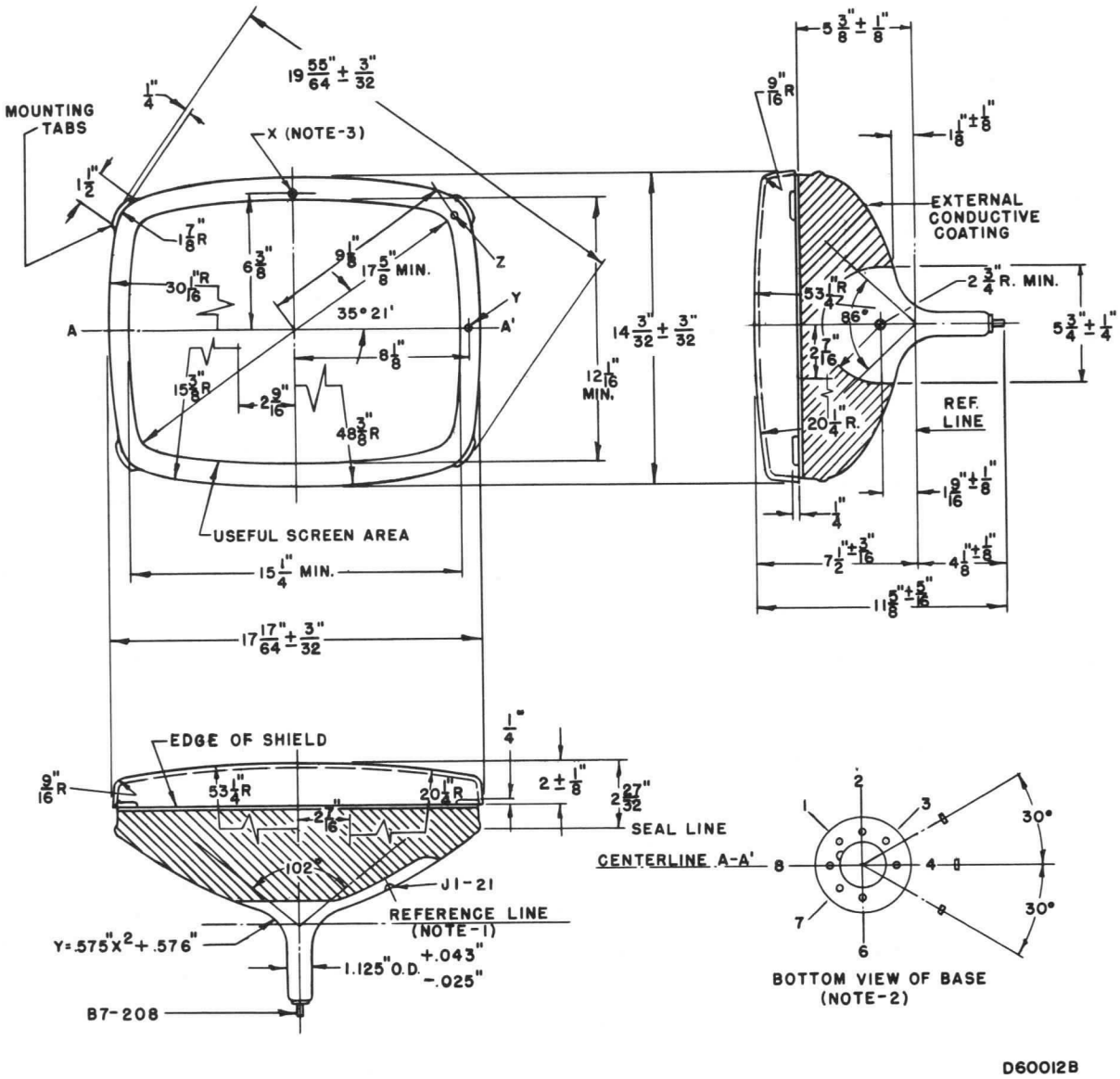

DIAGRAM NOTES:

1. *Reference line is determined by plane C-C' of JEDEC No. 126 Reference line Gauge, when the gauge is seated against the bulb.*
2. *Base Pin No. 4 aligns with horizontal centerline (A-A') within 30° and is on same side as anode contact, J1-21.*
3. *Planes perpendicular to tube axis and passing through points X, Y and Z are located as follows:*
   Plane tangent to crown of face to plane of X: 0.500" Nominal
   Plane of X to plane of Y = .421" ± .025"
   Plane of X to plane of Z = .738" ± .045"

CHARACTERISTICS

GENERAL DATA

Focusing Method	Electrostatic
Deflection Method	Magnetic
Deflection Angles (Approx.)	
Horizontal	101 Degrees
Diagonal	114 Degrees
Vertical	86 Degrees
Phosphor	Aluminized P4
Fluorescence	White
Persistence	Medium Short
Faceplate	Gray Filter Glass
Light Transmittance (Approx.)	78 Percent

ELECTRICAL DATA

Heater Voltage	6.3 Volts	
Heater Current	0.60 ± 5 % Ampere	
Heater Warm-up Time[1]	11 Seconds	
Direct Interelectrode Capacitances (Approx.)		
Cathode to All Other Electrodes	5 pf	
Grid No. 1 to All Other Electrodes	6 pf	
External Conductive Coating to Anode[2]	1900 pf	Max.
	1400 pf	Min.

MECHANICAL DATA

Minimum Useful Screen Dimensions (Maximum Assured)	
Height	12 Inches
Width	15 1/8 Inches
Diagonal	17 9/16 Inches
Area	172 Sq. Inches
Neck Length	4 3/8 ± 1/8 Inches
Overall Length	11 5/8 ± 1/4 Inches
Bulb	J149A
Bulb Contact (Recessed Small Cavity Cap)	J1-21
Base	B6-214
Basing	7FA
Weight (Approx.)	14 Pounds

RATINGS

MAXIMUM RATINGS (Design Maximum Values)

Cathode Drive Service[3]		
Maximum Anode Voltage	20,000 Volts	dc
Minimum Anode Voltage	12,000 Volts	dc
Grid No. 4 Voltage (Focusing Electrode)	−500 to +1100 Volts	dc
Grid No. 2 Voltage	55 Volts	dc
Cathode Voltage		
Negative Bias Value	0 Volt	dc
Negative Peak Value	2 Volts	
Positive Bias Value	100 Volts	dc
Positive Peak Value	140 Volts	
Peak Heater-Cathode Voltage		
Heater Negative with Respect to Cathode During Warm-up Period Not to Exceed 15 Seconds	410 Volts	
After Equipment Warm-up Period	180 Volts	
Heater Positive with Respect to Cathode	180 Volts	

TYPICAL OPERATING CONDITIONS

Cathode Drive Service[3]		
Anode Voltage	16,000 Volts	dc
Grid No. 4 Voltage for Focus	0 to +400 Volts	dc
Grid No. 2 Voltage[3]	45 Volts	dc
Cathode Voltage Required for Cutoff[4]	35 to 50 Volts	dc

QUICK REFERENCE DATA

Television Picture Tube
19″ Direct Viewed
Rectangular Glass Type
Gray Filter Glass
Aluminized Screen
Neck Length 4 3/8″
Electrostatic Focus
114° Magnetic Deflection
No Ion Trap
External Conductive Coating
6.3 Volts, 600 ma Heater
Low Grid No. 2 Voltage

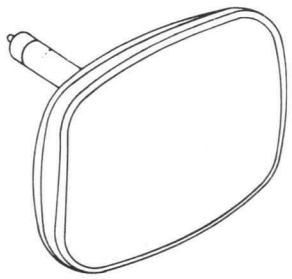

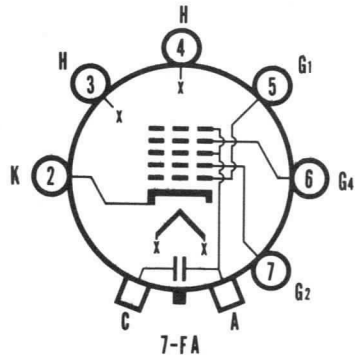

7-FA

SYLVANIA
ELECTRONIC TUBES

A Division of
Sylvania Electric Products Inc.

PICTURE TUBE
OPERATIONS

SENECA FALLS, NEW YORK

Prepared and Released By The
TECHNICAL PUBLICATIONS SECTION
EMPORIUM, PENNSYLVANIA

SEPTEMBER, 1963

File Under
TELEVISION PICTURE TUBES

CIRCUIT VALUES

Grid No. 1 Circuit Resistance	1.5 Megohms Max.

NOTES:

1. *Heater warm-up time is defined as the time required for the voltage across the heater to reach 80 % of the rated heater voltage after applying four (4) times rated heater voltage to a circuit consisting of the tube heater in series with a resistance equal to three (3) times the rated heater voltage divided by the rated heater current.*
2. *External conductive coating must be grounded.*
3. *Voltages are positive with respect to Grid No. 1 unless indicated otherwise.*
4. *Visual extinction of focused raster. Extinction of stationary focused spot will require that these values be about 5 volts more positive.*

WARNING:

X-ray radiation shielding may be necessary to protect against possible danger of personal injury from prolonged exposure at close range if this tube is operated at higher than the manufacturer's Maximum Rated Anode Voltage or 16,000 volts, whichever is less.

OUTLINE

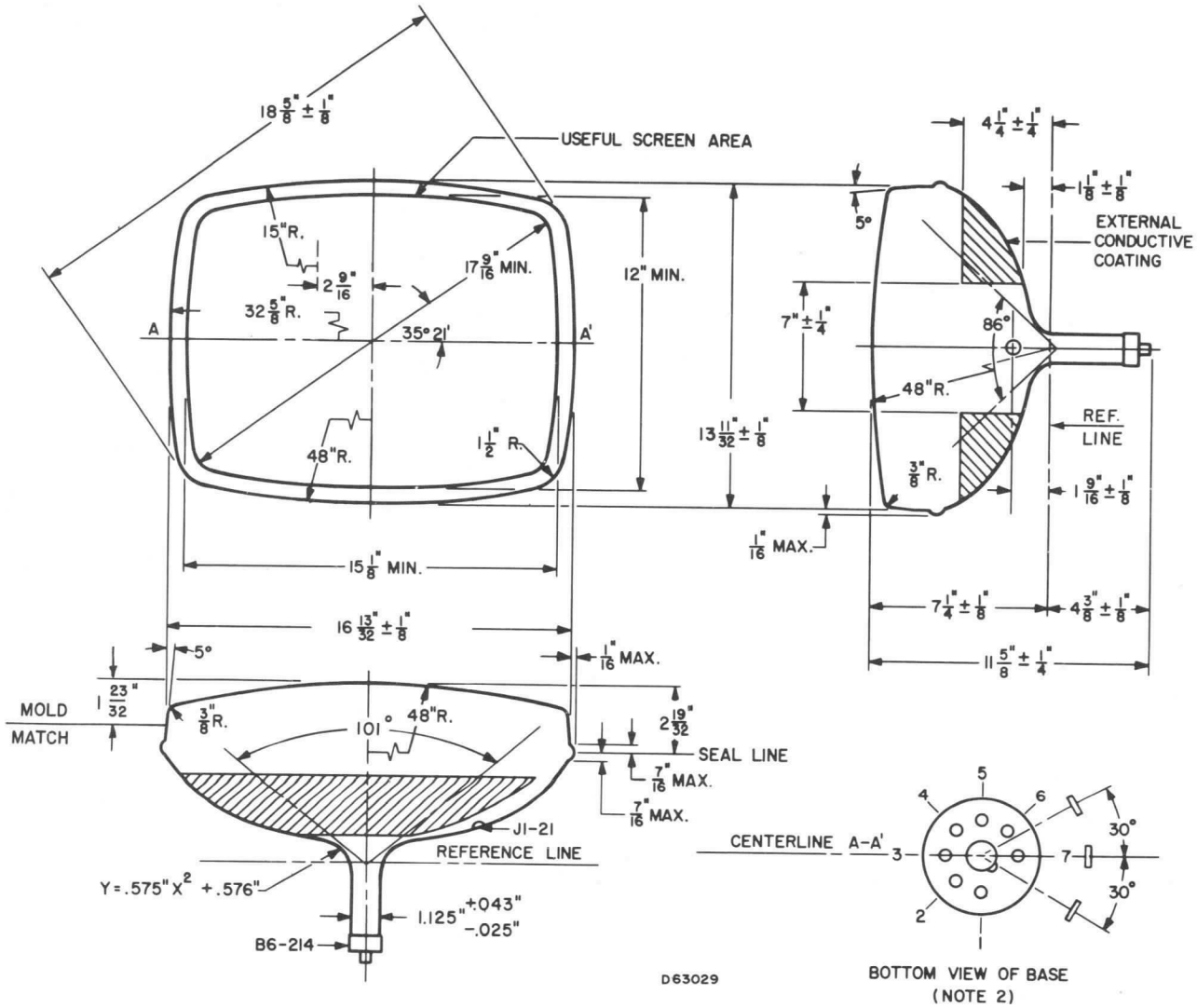

DIAGRAM NOTES:

1. *Reference line is determined by plane C-C' JEDEC No. 126 Reference Gauge when the gauge is seated against the bulb.*
2. *Base Pin No. 7 aligns with anode contact (J1-21) within 30°.*

CHARACTERISTICS

GENERAL DATA

Focusing Method	Electrostatic
Deflection Method	Magnetic
Deflection Angles (Approx.)	
Horizontal	101 Degrees
Diagonal	114 Degrees
Vertical	86 Degrees
Phosphor	Aluminized P4
Fluorescence	White
Persistence	Medium Short
Faceplate	Bonded Shield
(Gray Filter Glass Safety Plate Laminated Directly to Face of Tube)	
Light Transmittance (Approx.)	60 Percent

Type 19DAP4 has External Surface of Safety Plate Treated to Reduce Specular Reflection

ELECTRICAL DATA

Heater Voltage	6.3 Volts	
Heater Current	0.45 ± 5 % Ampere	
Heater Warm-up Time[1]	11 Seconds	
Direct Interelectrode Capacitances (Approx.)		
Cathode to All Other Electrodes	5 pf	
Grid No. 1 to All Other Electrodes	6 pf	
External Conductive Coating to Anode[2]	1500 pf	Max.
	1000 pf	Min.

MECHANICAL DATA

Minimum Useful Screen Dimensions (Maximum Assured)	
Height	12 1/16 Inches
Width	15 1/4 Inches
Diagonal	17 5/8 Inches
Minimum Useful Screen Area	172 Sq. Inches
Neck Length	4 1/8 ± 1/8 Inches
Overall Length	11 9/16 ± 5/16 Inches
Bulb	J149C
Safety Plate	19CZP4—1/8" Gray Glass
	19DAP4—Same, Anti-Reflection Treated
Bulb Contact (Recessed Small Cavity Cap)	J1-21
Base	B7-208
Basing	8HR
Weight (Approx.)	15 ½ Pounds

RATINGS

MAXIMUM RATINGS (Design Maximum Values)

Grid Drive Service[3]		
Maximum Anode Voltage	23,000 Volts	dc
Minimum Anode Voltage	15,000 Volts	dc
Grid No. 4 Voltage (Focusing Electrode)	−550 to +1100 Volts	dc
Maximum Grid No. 2 Voltage	550 Volts	dc
Minimum Grid No. 2 Voltage	200 Volts	dc
Grid No. 1 Voltage		
Negative Bias Value	155 Volts	dc
Negative Peak Value	220 Volts	
Positive Bias Value	0 Volts	dc
Positive Peak Value	2 Volts	
Peak Heater-Cathode Voltage		
Heater Negative with Respect to Cathode		
During Warm-up Period Not to Exceed 15 Secs.	450 Volts	
After Equipment Warm-up Period	200 Volts	
Heater Positive with Respect to Cathode	200 Volts	

QUICK REFERENCE DATA

Television Picture Tube
19" Direct Viewed
Rectangular Glass Type
Bonded Shield

19DAP4: Anti-Reflection Treated
Gray Filter Glass
Aluminized Screen
Electrostatic Focus
114° Magnetic Deflection
1⅛" Neck Diameter
No Ion Trap
External Conductive Coating

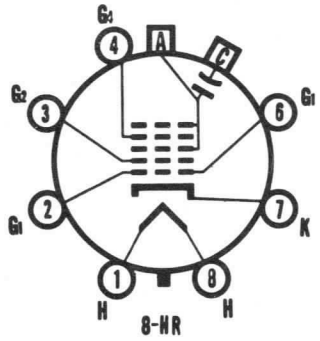

SYLVANIA
ELECTRONIC TUBES

A Division of
Sylvania Electric Products Inc.

PICTURE TUBE
OPERATIONS

SENECA FALLS, NEW YORK

Prepared and Released By The
TECHNICAL PUBLICATIONS SECTION
EMPORIUM, PENNSYLVANIA

JUNE, 1963

File Under
TELEVISION PICTURE TUBES

MAXIMUM RATINGS (Design Maximum Values) (Continued)

Cathode Drive Service[4]

Maximum Anode Voltage	23,000 Volts	dc
Minimum Anode Voltage	15,000 Volts	dc
Grid No. 4 Voltage (Focusing Electrode)	−400 to +1250 Volts	dc
Maximum Grid No. 2 Voltage	700 Volts	dc
Minimum Grid No. 2 Voltage	350 Volts	dc
Cathode Voltage		
Positive Bias Value	155 Volts	dc
Positive Peak Value	220 Volts	
Negative Bias Value	0 Volts	dc
Negative Peak Value	2 Volts	
Peak Heater-Cathode Voltage		
Heater Negative with Respect to Cathode		
During Warm-up Period Not to Exceed 15 Seconds	450 Volts	
After Equipment Warm-up Period	200 Volts	
Heater Positive with Respect to Cathode	200 Volts	

TYPICAL OPERATING CONDITIONS

Grid Drive Service[3]

Anode Voltage	20,000 Volts	dc
Grid No. 4 Voltage for Focus	0 to 400 Volts	dc
Grid No. 2 Voltage	400 Volts	dc
Grid No. 1 Voltage Required for Cutoff[5]	−46 to −94 Volts	dc

Cathode Drive Service[4]

Anode Voltage	20,000 Volts	dc
Grid No. 4 Voltage for Focus	0 to 400 Volts	dc
Grid No. 2 Voltage	400 Volts	dc
Cathode Voltage Required for Cutoff[5]	42 to 78 Volts	dc

CIRCUIT VALUES

Grid No. 1 Circuit Resistance	1.5 Megohms Max.

NOTES:

1. *Heater warm-up time is defined as the time required for the voltage across the heater to reach 80 % of the rated heater voltage after applying four (4) times rated heater voltage to a circuit consisting of the tube heater in series with a resistance equal to three (3) times the rated heater voltage divided by the rated heater current.*
2. *External conductive coating must be grounded.*
3. *Voltages are positive with respect to cathode unless indicated otherwise.*
4. *Voltages are positive with respect to Grid No. 1 unless indicated otherwise.*
5. *Visual extinction of focused raster. For cutoff of the undeflected focused spot, the absolute value of the bias between cathode and grid will increase by about 5 volts.*

WARNING:

X-ray radiation shielding may be necessary to protect against possible danger of personal injury from prolonged exposure at close range if this tube is operated at higher than the manufacturer's Maximum Rated Anode Voltage or 16,000 volts, whichever is less.

OUTLINE

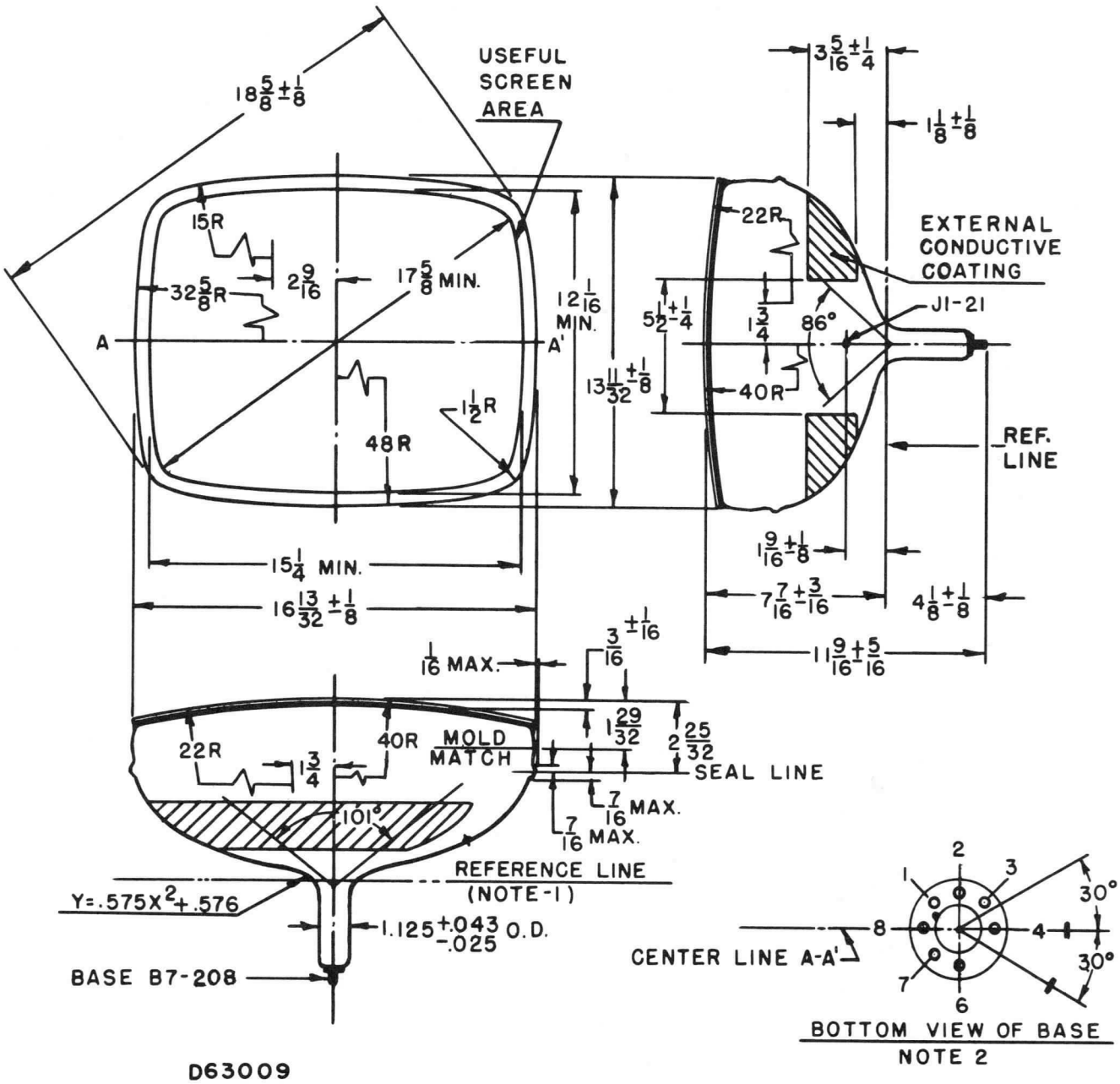

DIAGRAM NOTES:

1. *Reference Line is determined by plane C-C' of JEDEC No. 126 Reference Line Gauge when the gauge is seated against the bulb.*
2. *Base pin No. 4 aligns with horizontal centerline (A-A') within 30° and is on same side as anode contact (J1-21).*

CHARACTERISTICS

GENERAL DATA

Focusing	Electrostatic
Deflection Method	Magnetic
Deflection Angles (Approx.)	
Horizontal	101 Degrees
Diagonal	114 Degrees
Vertical	86 Degrees
Phosphor	Aluminized P4
Fluorescence	White
Persistence	Medium Short
Faceplate	Bonded Shield
(Gray Filterglass Safety Plate Laminated Directly to Face of Tube)	
Light Transmittance of Faceplate Assembly (Approx.)	
19DKP4	45 Percent
19DNP4	60 Percent

ELECTRICAL DATA

Heater Voltage	6.3 Volts	
Heater Current	0.60 ± 5 % Ampere	
Heater Warm-up Time[1]	11 Seconds	
Direct Interelectrode Capacitances (Approx.)		
Cathode to All Other Electrodes	5 pf	
Grid No. 1 to All Other Electrodes	6 pf	
External Conductive Coating to Anode[2]	1500 pf	Max.
	1000 pf	Min.

MECHANICAL DATA

Minimum Useful Screen Dimensions (Maximum Assured)	
Height	12 1/16 Inches
Width	15 ¼ Inches
Diagonal	17 5/8 Inches
Minimum Useful Screen Area	172 Sq. Inches
Neck Length	4 1/8 ± 1/8 Inches
Overall Length	11 9/16 ± 5/16 Inches
Bulb	J149C
Safety Plate	
19DKP4	FP149B2
(1/8 Inches Thick, 55 % Transmittance)	
19DNP4	FP149B1
(1/8 Inches Thick, 70 % Transmittance)	
Bulb Contact (Recessed Small Cavity Cap)	J1-21
Base	B7-208
Basing	8HR
Weight (Approx.)	15 ½ Pounds

RATINGS

MAXIMUM RATINGS (Design Maximum Values)

Grid Drive Service[3]

	19DNP4	19DKP4	
Maximum Anode Voltage	18,000	23,000 Volts	dc
Minimum Anode Voltage	10,000	15,000 Volts	dc
Grid No. 4 Voltage (Focusing Electrode)		−550 to +1100 Volts	dc
Maximum Grid No. 2 Voltage		550 Volts	dc
Minimum Grid No. 2 Voltage		200 Volts	dc
Grid No. 1 Voltage			
Negative Bias Value		155 Volts	dc
Negative Peak Value		220 Volts	
Positive Bias Value		0 Volt	dc
Positive Peak Value		2 Volts	
Peak Heater-Cathode Voltage			
Heater Negative with Respect to Cathode During Warm-up Period Not to Exceed 15 Seconds		450 Volts	
After Equipment Warm-up Period		200 Volts	
Heater Positive with Respect to Cathode		200 Volts	

QUICK REFERENCE DATA

Television Picture Tube
19″ Direct Viewed
Rectangular Glass Type
Bonded Shield
Gray Filter Glass
Aluminized Screen
Electrostatic Focus
114° Magnetic Deflection
1 1/8″ Neck Diameter
No Ion Trap
External Conductive Coating
19DKP4—High Anode Voltage
19DNP4—Low Anode Voltage

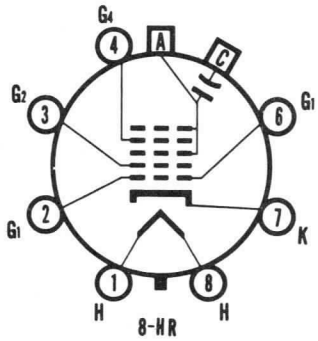

SYLVANIA ELECTRIC PRODUCTS INC.

Electronic Components Group
ELECTRONIC TUBE DIVISION
SENECA FALLS, NEW YORK

A Technical Publication

JUNE, 1965

File Under

TELEVISION PICTURE TUBES

MAXIMUM RATINGS (Design Maximum Values) Continued

Cathode Drive Service[4]

	19DNP4	19DKP4	
Maximum Anode Voltage	18,000	23,000 Volts	dc
Minimum Anode Voltage	10,000	15,000 Volts	dc
Grid No. 4 Voltage (Focusing Electrode)		−400 to +1250 Volts	dc
Maximum Grid No. 2 Voltage		700 Volts	dc
Minimum Grid No. 2 Voltage		350 Volts	dc
Cathode Voltage			
Positive Bias Value		155 Volts	dc
Positive Peak Value		220 Volts	
Negative Bias Value		0 Volt	dc
Negative Peak Value		2 Volts	
Peak Heater-Cathode Voltage			
Heater Negative with Respect to Cathode			
During Warm-up Period Not to Exceed 15 Seconds		450 Volts	
After Equipment Warm-up Period		200 Volts	
Heater Positive with Respect to Cathode		200 Volts	

TYPICAL OPERATING CONDITIONS

Grid Drive Service[3]

	19DNP4	19DKP4	
Anode Voltage	16,000	20,000 Volts	dc
Grid No. 4 Voltage for Focus	0 to 400	0 to 400 Volts	dc
Grid No. 2 Voltage	400	400 Volts	dc
Grid No. 1 Voltage Required for Cutoff[5]	40 to 76	−46 to −94 Volts	dc

Cathode Drive Service[4]

	19DNP4	19DKP4	
Anode Voltage	16,000	20,000 Volts	dc
Grid No. 4 Voltage for Focus	0 to 400	0 to 400 Volts	dc
Grid No. 2 Voltage	400	400 Volts	dc
Cathode Voltage Required for Cutoff[5]	40 to 76	42 to 78 Volts	dc

CIRCUIT VALUES

Grid No. 1 Circuit Resistance	1.5 Megohms Max.

NOTES:

1. *Heater warm-up time is defined as the time required for the voltage across the heater to reach 80 % of the rated heater voltage after applying four (4) times rated heater voltage to a circuit consisting of the tube heater in series with a resistance equal to three (3) times the rated heater voltage divided by the rated heater current.*
2. *External conductive coating must be grounded.*
3. *Voltages are positive with respect to cathode unless indicated otherwise.*
4. *Voltages are positive with respect to Grid No. 1 unless indicated otherwise.*
5. *Visual extinction of focused raster. For cutoff of the undeflected focused spot, the absolute value of the bias between cathode and grid will increase by about 5 volts.*

WARNING:

X-ray radiation shielding may be necessary to protect against possible danger of personal injury from prolonged exposure at close range if this tube is operated at higher than the manufacturer's Maximum Rated Anode Voltage or 16,000 Volts, whichever is less.

OUTLINE

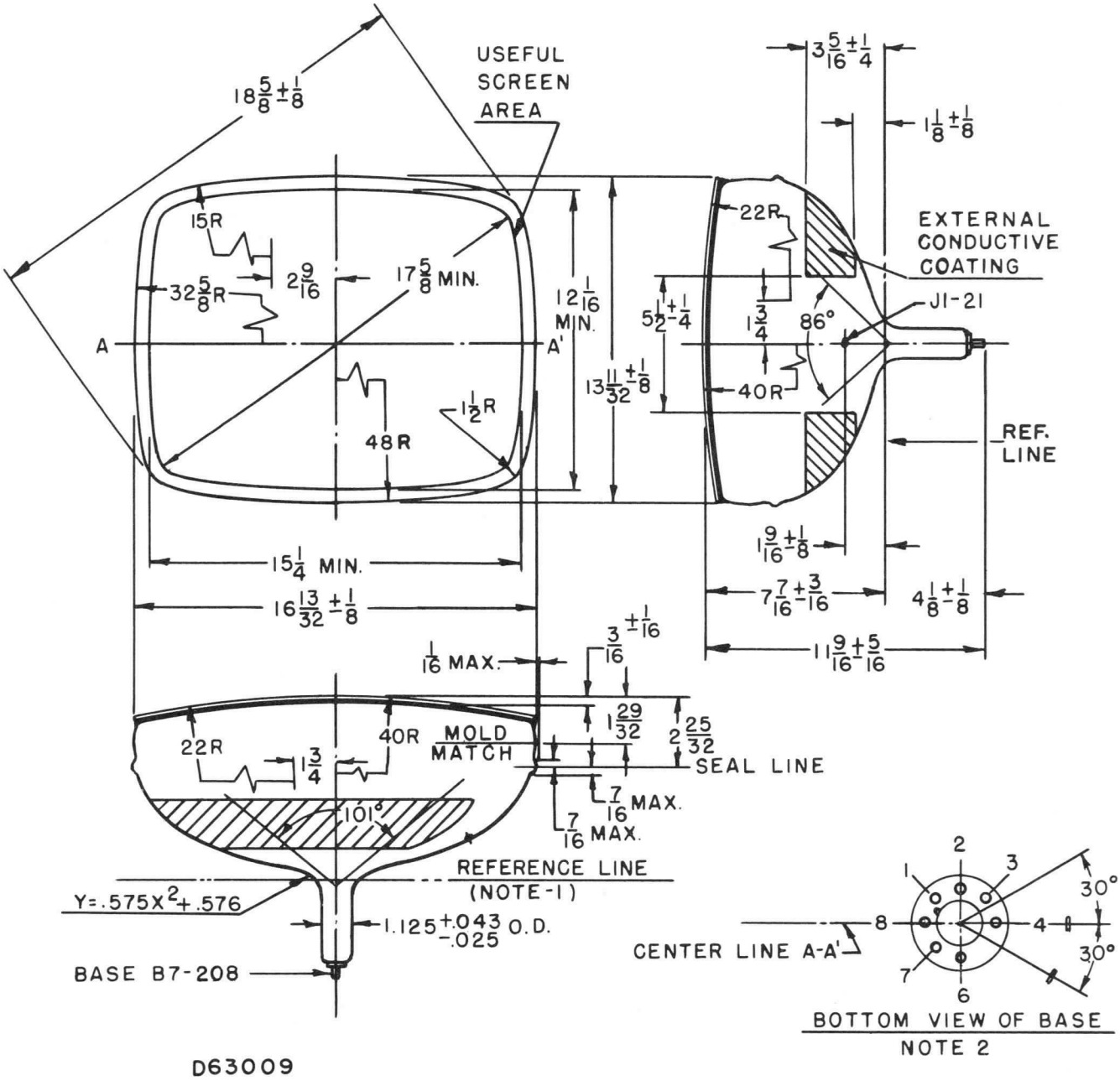

DIAGRAM NOTES:

1. *Reference Line is determined by plane C-C' of JEDEC No. 126 Reference Line Gauge when the gauge is seated against the bulb.*
2. *Base Pin No. 4 aligns with horizontal centerline (A-A') within 30° and is on same side as anode contact (J1-21).*
3. *Dimensions are in inches.*

CHARACTERISTICS

GENERAL DATA

Focusing Method	Electrostatic
Deflection Method	Magnetic
Deflection Angles (Approx.)	
Horizontal	101 Degrees
Diagonal	114 Degrees
Vertical	86 Degrees
Phosphor	Aluminized P4
Fluorescence	White
Persistence	Medium Short
Faceplate	Gray Filter Glass
Light Transmittance (Approx.)	49 Percent

ELECTRICAL DATA

Heater Voltage	6.3 Volts	
Heater Current	0.45 ± 5 % Ampere	
Heater Warm-up Time[1]	11 Seconds	
Direct Interelectrode Capacitances (Approx.)		
Cathode to All Other Electrodes	5 pf	
Grid No. 1 to All Other Electrodes	6 pf	
External Conductive Coating and Rimbands to Anode[2]	1500 pf	Max.
	1000 pf	Min.
Resistance Between External Conductive Coating and Metal Bands	50 Megohms	Min.

MECHANICAL DATA

Minimum Useful Screen Dimensions (Maximum Assured)	
Height	12 Inches
Width	$15\frac{3}{16}$ Inches
Diagonal	$17\frac{9}{16}$ Inches
Minimum Useful Screen Area	172 Sq. Inches
Neck Length	$4\frac{1}{8} \pm \frac{1}{8}$ Inches
Overall Length	$11\frac{3}{8} \pm \frac{1}{4}$ Inches
Bulb	J149F
Bulb Contact (Recessed Small Cavity Cap)	J1-21
Base	B7-208
Basing	8HR
Weight (Approx.)	15 Pounds

RATINGS

MAXIMUM RATINGS (Design Maximum Values)

Grid Drive Service[3]

Maximum Anode Voltage	23,000 Volts	dc
Minimum Anode Voltage	11,000 Volts	dc
Grid No. 4 Voltage (Focusing Electrode)	−550 to +1100 Volts	dc
Maximum Grid No. 2 Voltage	550 Volts	dc
Minimum Grid No. 2 Voltage	200 Volts	dc
Grid No. 1 Voltage		
Negative Bias Value	154 Volts	dc
Negative Peak Value	220 Volts	
Positive Bias Value	0 Volt	dc
Positive Peak Value	2 Volts	
Peak Heater-Cathode Voltage		
Heater Negative with Respect to Cathode		
During Warm-up Period not to Exceed 15 Seconds	450 Volts	
After Equipment Warm-up Period	300 Volts	
Heater Positive with Respect to Cathode	200 Volts	
DC Component	100 Volts	

QUICK REFERENCE DATA

Television Picture Tube
19″ Direct Viewed
Rectangular Glass Type
Spherical Faceplate
Gray Filter Glass
Aluminized Screen
Electrostatic Focus
114° Magnetic Deflection
$1\frac{1}{8}$″ Neck Diameter
No Ion Trap
External Conductive Coating
Banded Tube Integral
Implosion Protection

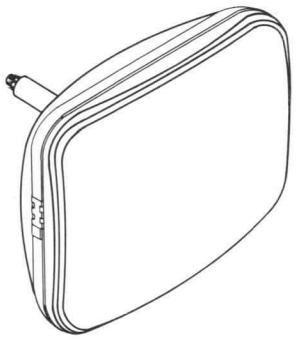

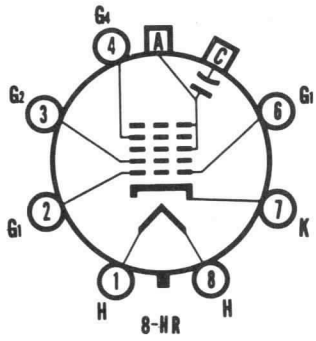

SYLVANIA ELECTRIC PRODUCTS INC.

Electronic Components Group
ELECTRONIC TUBE DIVISION
SENECA FALLS, NEW YORK

A Technical Publication

JULY, 1965

File Under

TELEVISION PICTURE TUBES

MAXIMUM RATINGS (Design Maximum Values) (Continued)

Cathode Drive Service[4]

Maximum Anode Voltage	23,000 Volts	dc
Minimum Anode Voltage	11,000 Volts	dc
Grid No. 4 Voltage (Focusing Electrode)	−400 to +1250 Volts	dc
Maximum Grid No. 2 Voltage	700 Volts	dc
Minimum Grid No. 2 Voltage	350 Volts	dc
Cathode Voltage		
Positive Bias Value	154 Volts	dc
Positive Peak Value	220 Volts	
Negative Bias Value	0 Volt	dc
Negative Peak Value	2 Volts	
Peak Heater-Cathode Voltage		
Heater Negative with Respect to Cathode		
During Warm-up Period Not to Exceed 15 Seconds	450 Volts	
After Equipment Warm-up Period	300 Volts	
Heater Positive with Respect to Cathode	200 Volts	
DC Component	100 Volts	

TYPICAL OPERATING CONDITIONS

Grid Drive Service[3]

Anode Voltage	20,000 Volts	dc
Grid No. 4 Voltage for Focus	−200 to +200 Volts	dc
Grid No. 2 Voltage	400 Volts	dc
Grid No. 1 Voltage Required for Cutoff[5]	−50 to −98 Volts	dc

Cathode Drive Service[4]

Anode Voltage	20,000 Volts	dc
Grid No. 4 Voltage for Focus	−200 to +200 Volts	dc
Grid No. 2 Voltage	400 Volts	dc
Cathode Voltage Required for Cutoff[5]	48 to 82 Volts	dc

CIRCUIT VALUES

Grid No. 1 Circuit Resistance	1.5 Megohms Max.

NOTES:

1. *Heater warm-up time is defined as the time required for the voltage across the heater to reach 80 % of the rated heater voltage after applying four (4) times rated heater voltage to a circuit consisting of the tube heater in series with a resistance equal to three (3) times the rated heater voltage divided by the rated heater current.*
2. *External conductive coating and rimbands must be grounded.*
3. *Voltages are positive with respect to cathode unless indicated otherwise.*
4. *Voltages are positive with respect to Grid No. 1 unless indicated otherwise.*
5. *Visual extinction of focused raster. For cutoff of the undeflected focused spot, the absolute value of the bias between cathode and grid will increase by about 5 volts.*

WARNING:

X-ray radiation shielding may be necessary to protect against possible danger of personal injury from prolonged exposure at close range if this tube is operated at higher than the manufacturer's Maximum Rated Anode Voltage or 16,000 volts, whichever is less.

OUTLINE

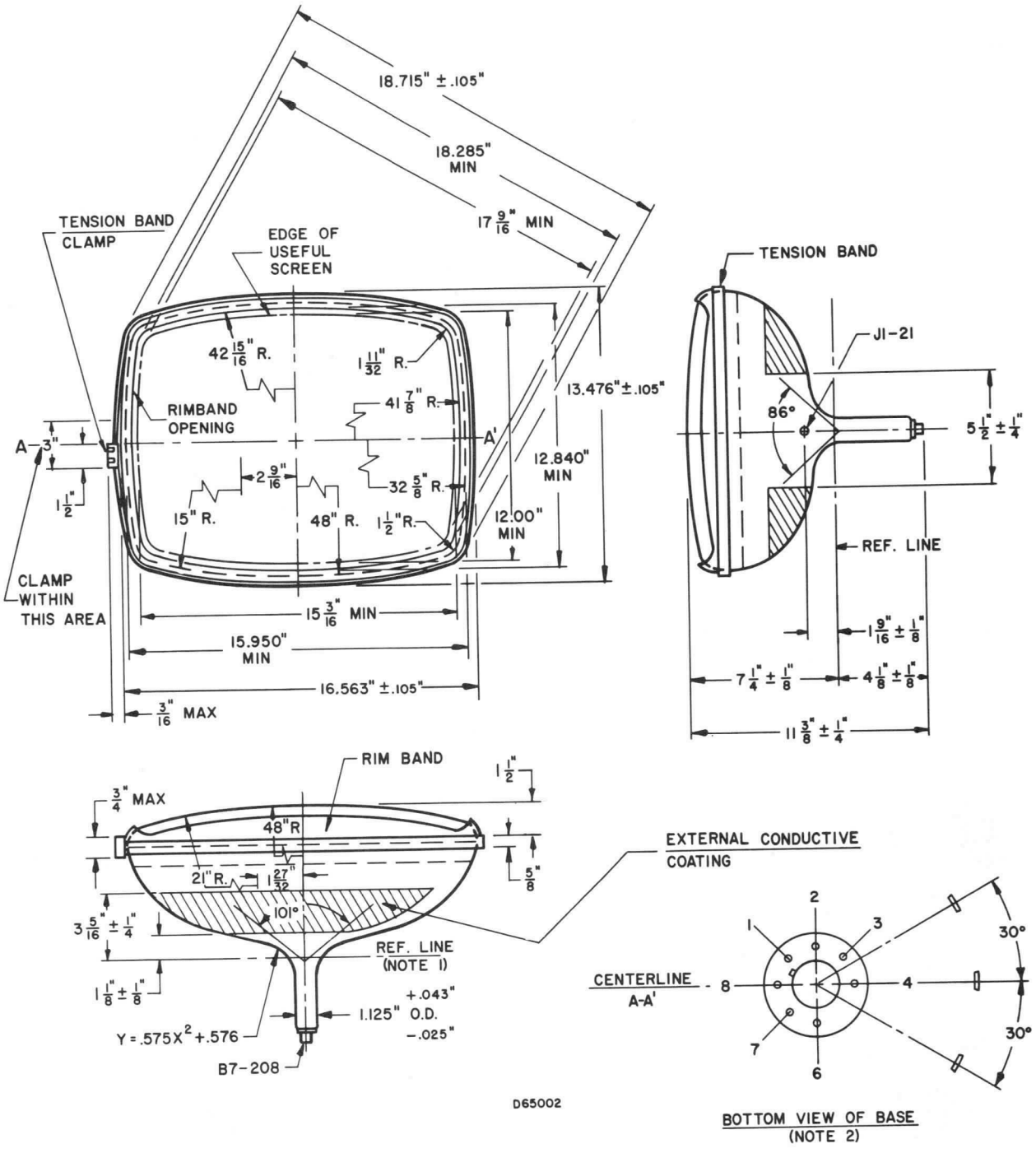

DIAGRAM NOTES:

1. *Reference Line is determined by Plane C-C' of JEDEC No. 126 Reference Line Gauge when the gauge is seated against the bulb.*
2. *Base Pin No. 4 aligns with horizontal centerline (A-A') within 30° and is on the same side as anode contact (J1-21).*

CHARACTERISTICS

GENERAL DATA

Focusing Method	Electrostatic
Deflection Method	Magnetic
Deflection Angles (Approx.)	
Horizontal	101 Degrees
Diagonal	114 Degrees
Vertical	86 Degrees
Phosphor	Aluminized P4
Fluorescence	White
Persistence	Medium Short
Faceplate	Gray Filter Glass
Light Transmittance of Faceplate (Approx.)	49 Percent

These types employ banded tube integral implosion protection.

ELECTRICAL DATA

Heater Voltage	6.3 Volts	
Heater Current	0.60 ± 5 % Ampere	
Heater Warm-up Time[1]	11 Seconds	
Direct Interelectrode Capacitances (Approx.)		
Cathode to All Other Electrodes	5 pf	
Grid No. 1 to All Other Electrodes	6 pf	
External Conductive Coating and Rimbands to Anode[2]	1500 pf	Max.
	1000 pf	Min.
Resistance Between External Conductive Coating and Rimband	50 Megohms	Min.

MECHANICAL DATA

Minimum Useful Screen Dimensions (Max. Assured)	
Height	12 Inches
Width	$15\frac{3}{16}$ Inches
Diagonal	$17\frac{9}{16}$ Inches
Minimum Useful Screen Area	172 Sq. Inches
Neck Length	$4\frac{3}{8} \pm \frac{1}{8}$ Inches
Overall Length	$11\frac{5}{8} \pm \frac{1}{4}$ Inches
Bulb	J149F
Bulb Contact (Recessed Small Cavity Cap)	J1-21
Base	B7-208
Basing	8HR
Weight (Approx.)	15 Pounds

RATINGS

MAXIMUM RATINGS (Design Maximum Values)

Grid Drive Service[3]	19EHP4	19EDP4	
Maximum Anode Voltage	18,000	23,000 Volts	dc
Minimum Anode Voltage	10,000	15,000 Volts	dc
Grid No. 4 Voltage (Focusing Electrode)		−550 to +1100 Volts	dc
Maximum Grid No. 2 Voltage		550 Volts	dc
Minimum Grid No. 2 Voltage		200 Volts	dc
Grid No. 1 Voltage			
Negative Bias Value		155 Volts	dc
Negative Peak Value		220 Volts	
Positive Bias Value		0 Volt	dc
Positive Peak Value		2 Volts	
Peak Heater-Cathode Voltage			
Heater Negative with Respect to Cathode			
During Warm-up Period Not to Exceed 15 Seconds		450 Volts	
After Equipment Warm-up Period		200 Volts	
Heater Positive with Respect to Cathode		200 Volts	

QUICK REFERENCE DATA

Television Picture Tubes
19 Inch Direct Viewed
Rectangular Glass Types
Banded Tubes
Gray Filter Glass
Aluminized Screen
Electrostatic Focus
114 Degree Magnetic Deflection
1⅛ Inch Neck Diameter
No Ion Trap
External Conductive Coating
19EDP4—High Anode Voltage
19EHP4—Low Anode Voltage

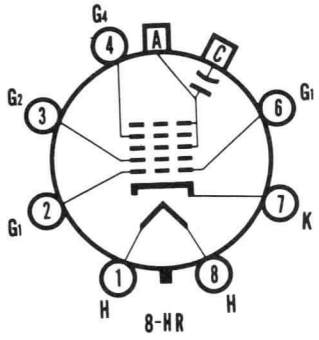

SYLVANIA ELECTRIC PRODUCTS INC.

Electronic Components Group
ELECTRONIC TUBE DIVISION
SENECA FALLS, NEW YORK

A Technical Publication
JUNE, 1965

File Under
TELEVISION PICTURE TUBES

MAXIMUM RATINGS (Design Maximum Values) (cont'd)

Cathode Drive Service[4]	19EHP4	19EDP4	
Maximum Anode Voltage	18,000	23,000 Volts	dc
Minimum Anode Voltage	10,000	15,000 Volts	dc
Grid No. 4 Voltage (Focusing Electrode)		−400 to +1250 Volts	dc
Maximum Grid No. 2 Voltage		700 Volts	dc
Minimum Grid No. 2 Voltage		350 Volts	dc
Cathode Voltage			
Positive Bias Value		155 Volts	dc
Positive Peak Value		220 Volts	
Negative Bias Value		0 Volt	dc
Negative Peak Value		2 Volts	
Peak Heater-Cathode Voltage			
Heater Negative with Respect to Cathode			
During Warm-up Period Not to Exceed 15 Seconds		450 Volts	
After Equipment Warm-up Period		300 Volts	
DC Component		200 Volts	dc
Heater Positive with Respect to Cathode		200 Volts	
DC Component		100 Volts	dc

TYPICAL OPERATING CONDITIONS

Grid Drive Service[3]	19EHP4	19EDP4	
Anode Voltage	16,000	20,000 Volts	dc
Grid No. 4 Voltage for Focus	0 to 400	0 to 400 Volts	dc
Grid No. 2 Voltage	300	400 Volts	dc
Grid No. 1 Voltage Required for Cutoff[5]	−35 to −72	−46 to −94 Volts	dc
Cathode Drive Service[4]	**19EHP4**	**19EDP4**	
Anode Voltage	16,000	20,000 Volts	dc
Grid No. 4 Voltage for Focus	0 to 400	0 to 400 Volts	dc
Grid No. 2 Voltage	400	400 Volts	dc
Cathode Voltage Required for Cutoff[5]	40 to 76	42 to 78 Volts	dc

CIRCUIT VALUES

Grid No. 1 Circuit Resistance	1.5 Megohms Max.

NOTES:

1. *Heater warm-up time is defined as the time required for the voltage across the heater to reach 80 % of the rated heater voltage after applying four (4) times rated heater voltage to a circuit consisting of the tube heater in series with a resistance equal to three (3) times the rated heater voltage divided by the rated heater current.*
2. *External conductive coating and rimbands must be grounded.*
3. *Voltages are positive with respect to cathode unless indicated otherwise.*
4. *Voltages are positive with respect to Grid No. 1 unless indicated otherwise.*
5. *Visual extinction of focused raster. For cutoff of the undeflected focused spot, the absolute value of the bias between cathode and grid will increase by about 5 volts.*

WARNING:

X-ray radiation shielding may be necessary to protect against possible danger of personal injury from prolonged exposure at close range if this tube is operated at higher than the manufacturer's Maximum Rated Anode Voltage or 16,000 volts, whichever is less.

OUTLINE

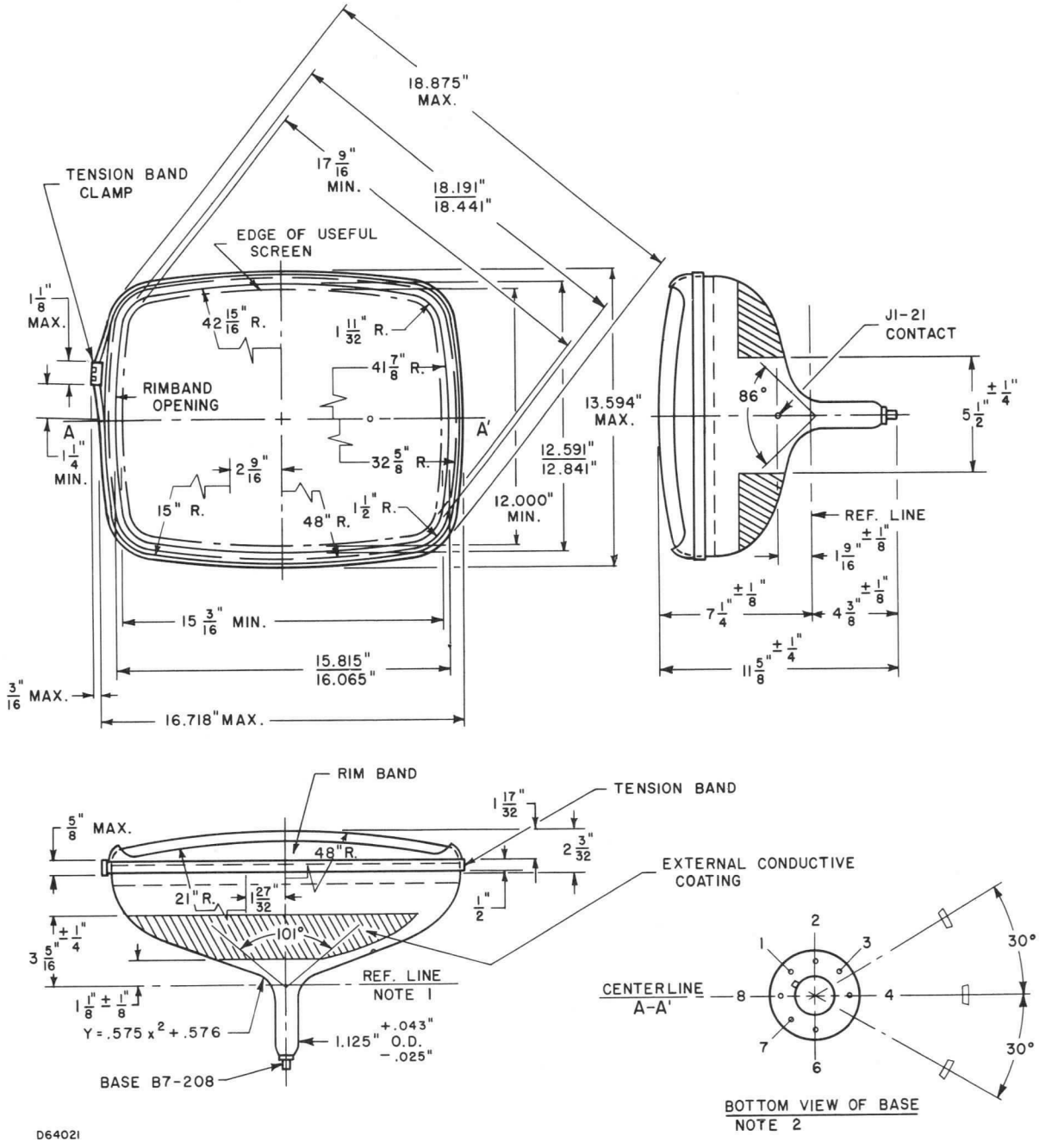

DIAGRAM NOTES:

1. *Reference Line is determined of Plane C-C' of JEDEC No. 126 Reference Line Gauge when the gauge is seated against the bulb.*
2. *Base Pin No. 4 aligns with horizontal centerline (A-A') within 30° and is on same side as anode contact (J1-21).*

CHARACTERISTICS

GENERAL DATA

Focusing Method	Electrostatic
Deflection Method	Magnetic
Deflection Angles (Approx.)	
Horizontal	101 Degrees
Diagonal	114 Degrees
Vertical	86 Degrees
Phosphor	Aluminized P4
Fluorescence	White
Persistence	Short to Medium
Faceplate	Gray Filter Glass
Light Transmittance (Approx.)	78 Percent

ELECTRICAL DATA

	19AYP4 19AXP4	19XP4 19AVP4	
Heater Voltage	6.3	6.3	Volts
Heater Current ± 5%	0.45	0.60	Ampere
Heater Warm-up Time[1]	11	11	Seconds
Direct Interelectrode Capacitances (Approx.)			
Cathode to All Other Electrodes		5	μμf
Grid No. 1 to All Other Electrodes		6	μμf
External Conductive Coating to Anode[2]		1500	μμf Max.
		1000	μμf Min.

MECHANICAL DATA

Minimum Useful Screen Dimensions (Maximum Assured)	
Height	12 Inches
Width	15⅛ Inches
Diagonal	17 9/16 Inches
Minimum Useful Screen Area	172 Sq. Inches
Neck Length	4⅛ ± ⅛ Inches
Overall Length	11⅜ ± ¼ Inches
Bulb	J149A
Bulb Contact (Recessed Small Cavity Cap)	J1-21
Base	B7-208
Basing	8HR
Weight (Approx.)	13½ Pounds

RATINGS

MAXIMUM RATINGS (Design Maximum Values)

Grid Drive Service[3]	19AYP4 19AVP4	19AXP4	19XP4		
Maximum Anode Voltage	23,000	20,000	20,000	Volts	dc
Minimum Anode Voltage	15,000	10,000	11,000	Volts	dc
Grid No. 4 Voltage (Focusing Electrode)			−550 to +1100	Volts	dc
Maximum Grid No. 2 Voltage			550	Volts	dc
Minimum Grid No. 2 Voltage			200	Volts	dc
Grid No. 1 Voltage					
Negative Bias Value			154	Volts	dc
Negative Peak Value			220	Volts	
Positive Bias Value			0	Volts	dc
Positive Peak Value			2	Volts	
Peak Heater-Cathode Voltage					
Heater Negative with Respect to Cathode					
During Warm-up Period not to Exceed 15 Seconds			450	Volts	
After Equipment Warm-up Period			200	Volts	
Heater Positive with Respect to Cathode			200	Volts	

QUICK REFERENCE DATA

Television Picture Tube
19″ Direct Viewed
Rectangular Glass Type
Spherical Faceplate
Gray Filter Glass
Aluminized Screen
Electrostatic Focus
114° Magnetic Deflection
1 ⅛″ Neck Diameter
No Ion Trap
External Conductive Coating

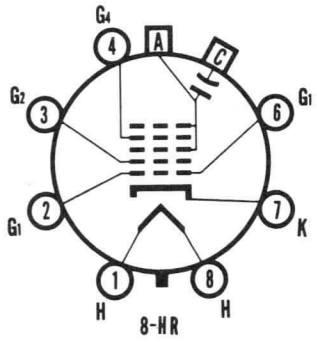

SYLVANIA
ELECTRONIC TUBES
A Division of
Sylvania Electric Products Inc.
PICTURE TUBE OPERATIONS
SENECA FALLS, NEW YORK
Prepared and Released By The
TECHNICAL PUBLICATIONS SECTION
EMPORIUM, PENNSYLVANIA
OCTOBER, 1961

File Under
TELEVISION PICTURE TUBES

MAXIMUM RATINGS (Design Maximum Values) Con't.

Cathode Drive Service[4]	19AYP4 19AVP4	19AXP4	19XP4		
Maximum Anode Voltage	23,000	20,000	20,000	Volts	dc
Minimum Anode Voltage	15,000	10,000	11,000	Volts	dc
Grid No. 4 Voltage (Focusing Electrode)			−400 to +1250	Volts	dc
Maximum Grid No. 2 Voltage			700	Volts	dc
Minimum Grid No. 2 Voltage			350	Volts	dc
Cathode Voltage					
Positive Bias Value			154	Volts	dc
Positive Peak Value			220	Volts	
Negative Bias Value			0	Volts	dc
Negative Peak Value			2	Volts	
Peak Heater-Cathode Voltage					
Heater Negative with Respect to Cathode					
During Warm-up Period not to Exceed 15 Seconds			450	Volts	
After Equipment Warm-up Period			200	Volts	
Heater Positive with Respect to Cathode			200	Volts	

TYPICAL OPERATING CONDITIONS

Grid Drive Service[3]	19AYP4 19AVP4	19AXP4 19XP4		
Anode Voltage	20,000	16,000	Volts	dc
Grid No. 4 Voltage for Focus		0 to 400	Volts	dc
Grid No. 2 Voltage		400	Volts	dc
Grid No. 1 Voltage Required for Cutoff[5]		−46 to −94	Volts	dc

Cathode Drive Service[4]	19AYP4 19AVP4	19AXP4 19XP4		
Anode Voltage	20,000	16,000	Volts	dc
Grid No. 4 Voltage for Focus		0 to 400	Volts	dc
Grid No. 2 Voltage		400	Volts	dc
Cathode Voltage Required for Cutoff[5]		42 to 78	Volts	dc

CIRCUIT VALUES

Grid No. 1 Circuit Resistance	1.5 Megohms Max.

NOTES:

1. *Heater warm-up time is defined as the time required for the voltage across the heater to reach 80% of the rated heater voltage after applying four (4) times rated heater voltage to a circuit consisting of the tube heater in series with a resistance equal to three (3) times the rated heater voltage divided by the rated heater current.*
2. *External conductive coating must be grounded.*
3. *Voltages are positive with respect to cathode unless indicated otherwise.*
4. *Voltages are positive with respect to Grid No. 1 unless indicated otherwise.*
5. *Visual extinction of focused raster. For cutoff of the undeflected focused spot, the absolute value of the bias between cathode and grid will increase by about 5 volts.*

WARNING:

X-ray radiation shielding may be necessary to protect against possible danger of personal injury from prolonged exposure at close range if this tube is operated at higher than the manufacturer's Maximum Rated Anode Voltage or 16,000 volts, whichever is less.

OUTLINE

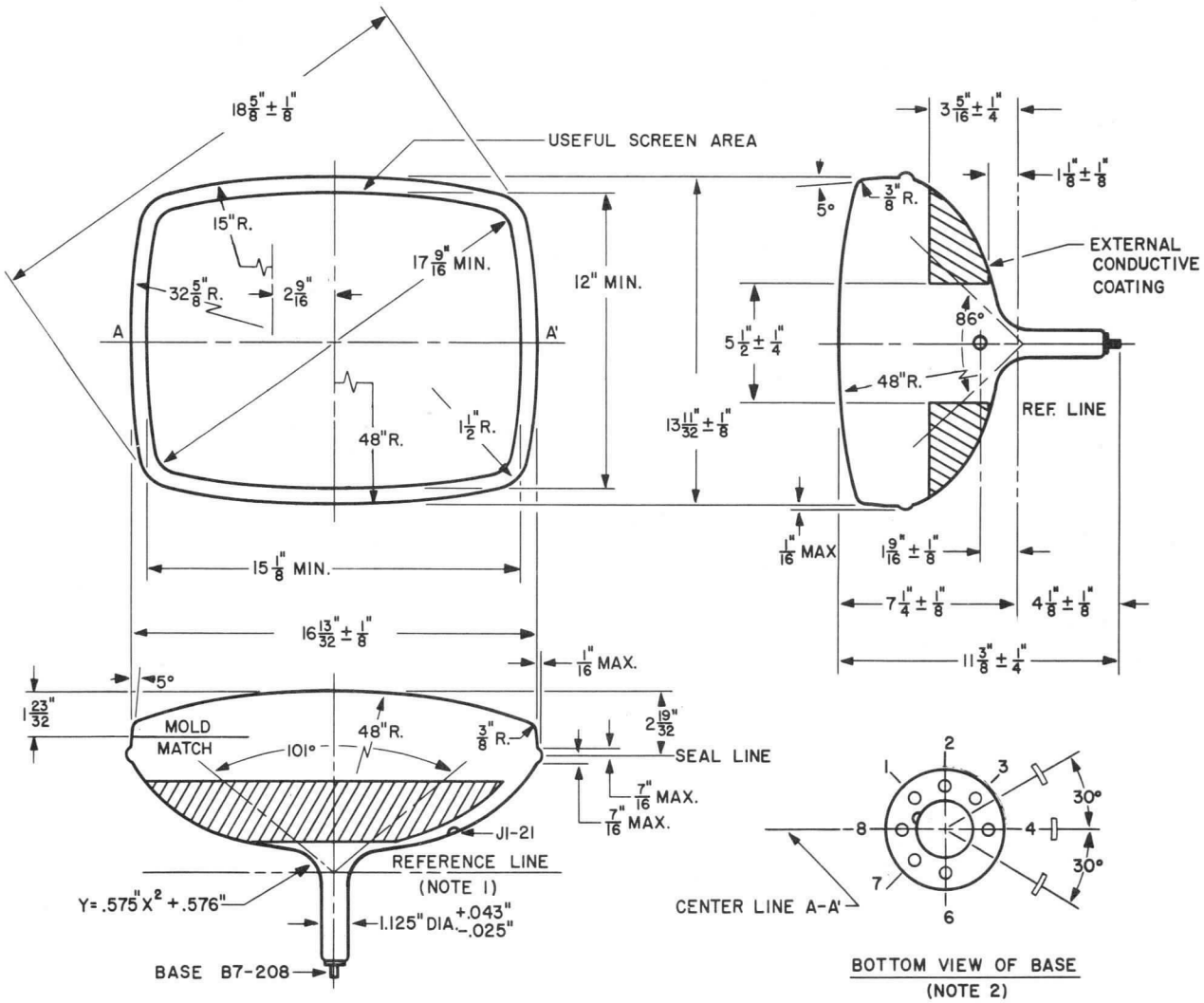

DIAGRAM NOTES:

1. *Reference Line is determined by plane C-C' of JEDEC No. 126 Reference Line Gauge, when the gauge is seated against the bulb.*
2. *Base Pin No. 4 aligns with horizontal centerline (A-A') within 30° and is on same side as anode contact, J1-21.*

SYLVANIA

engineering data service

SYLVANIA
21AXP22
21AXP22A

GENERAL INFORMATION

The Sylvania Type 21AXP22 and 21AXP22A are direct viewed, metal picture tubes for use in color television receivers. They are capable of producing either a full-color or black and white picture measuring 19 1/16 by 15 1/4 inches with rounded sides and having a projected area of 255 square inches.

The 21AXP22 and 21AXP22A each utilize three electrostatic focus guns spaced 120 degrees apart with axes tilted toward the tube axis to facilitate convergence of the three beams at the shadow mask; individual convergence control of each beam radially by internal magnetic poles and supplemental control of the blue beam tangentially by internal magnetic poles; and an assembly consisting of a spherical, metal shadow mask with uniform holes and a metalized, tri-color, phosphor dot screen.

The tri-color, phosphor-dot screen is composed of an orderly array of small, closely spaced, phosphor dots arranged in triangular groups. Each group consists of a green-emitting dot, a red-emitting dot, and a blue-emitting dot, and is aligned with a corresponding hole in the shadow mask.

The 21AXP22A features an internal neck coating having high resistance which eliminates the need for an external resistor between the anode power supply and the tube to protect the tube against damage by a momentary internal arc. The resistance of the neck coating permits use of a tube insulating boot having an external conductive coating which with the metal envelope of the tube forms a supplementary filter capacitor.

CHARACTERISTICS

GENERAL DATA

Focusing Method	Electrostatic
Deflecting Method	Magnetic
Converging Method	Magnetic
Deflecting Angles (approx.)	
Horizontal	70 Degrees
Vertical	55 Degrees
Phosphor, Blue-Green-Red Dots	P22
Persistence	Medium
Arrangement	Triangular groups each consisting of blue dot, green dot and red dot.
Spacing Between Centers of Adjacent Dot Trios (approx.)	0.029 Inches
Faceplate, Spherical	Filter Glass
Light Transmittance (approx.)	77 Percent
Screen	Aluminized, Tri-color, Phosphor-dot Type

ELECTRICAL DATA

Heater Voltage	6.3 Volts
Heater Current (approx.)	1.8 ± 10% Amperes
Direct Interelectrode Capacitances (approx.)	
Grid No. 1 of any Gun to All Other Electrodes Except the No. 1 Grids of other Two Guns	7 μμf
Cathode of Blue Gun + Cathode of Green Gun + Cathode of Red Gun to All Other Electrodes	16 μμf
Grid No. 3 (of Each Gun Tied Within Tube to No. 3 Grids of Other Two Guns) to All Other Electrodes	9 μμf

QUICK REFERENCE DATA

Color Television Picture Tube
21" Direct Viewed
Round Metal Type
Spherical Faceplate
Filter Glass
Electrostatic Focus
Magnetic Convergence
Magnetic Deflection
Three Electron-Gun Type

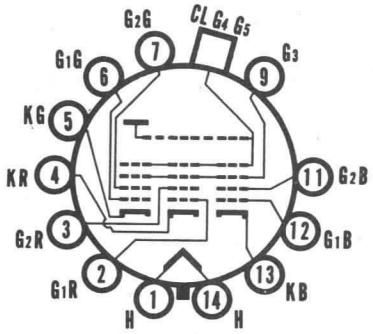

14-W

21AXP22

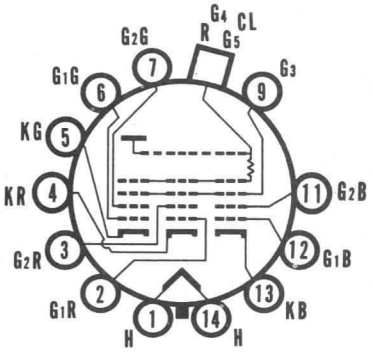

14-AH

21AXP22A

SYLVANIA ELECTRIC PRODUCTS INC.

TELEVISION PICTURE TUBE DIVISION

SENECA FALLS, NEW YORK

Prepared and Released By The
TECHNICAL PUBLICATIONS SECTION
EMPORIUM, PENNSYLVANIA

AUGUST, 1957

MECHANICAL DATA

Minimum Useful Screen Dimensions	19 1/16 x 15 1/4 Inches
Projected Screen Area	255 Sq. Inches
Anode[1] Terminal	Metal Shell Lip
Base (Small Shell Neodiheptal 12-Pin)	B12-131
Basing	
21AXP22	14W
21AXP22A	14AH
Mounting Position (base pin 12 on top)	Blue Gun Up
Weight (approx.)	28 Pounds
Tube Dimensions	
Maximum Overall Length	25 5/16 Inches
Diameter	
At Lip	20 9/16 ± 1/8 Inches
At Flange (Max.)	20 15/16 ± 5/16 Inches

RATINGS

Unless otherwise specified, voltage values are positive with respect to cathode of specified gun

MAXIMUM RATINGS (Absolute Maximum Values)

Anode[1]-to-Cathode (Of Each Gun) Voltage	27,500 Volts	Max.
Anode[1] Current (Average Each Gun)[2]	500 μa	Max.
Grid No. 3-to-Cathode (Of Each Gun) Voltage	6600 Volts	Max.
Grid No. 2-to-Cathode Voltage (Each Gun)	880 Volts	Max.
Grid No. 1-to-Cathode Voltage (Each Gun)		
Negative Bias Value	440 Volts	Max.
Positive Bias Value	0 Volts	Max.
Positive Peak Value	2 Volts	Max.
Peak Heater-Cathode Voltage (Each Gun)		
Heater Negative with Respect to Cathode		
During Warm-up Period not to Exceed 15 Seconds	450 Volts	Max.
After Equipment Warm-up Period	200 Volts	Max.
Heater Positive with Respect to Cathode	200 Volts	Max.

EQUIPMENT DESIGN RANGES (For Anode Voltage E_{c4k} (Each Gun) between 20,000[3] and 25,000 Volts)

Grid No. 3 (Focusing Electrode)-to-Cathode (Of Each Gun) Voltage	15.2% to 21.2 % of E_{c4k} Each Gun Volts
Grid No. 2-to-Cathode Voltage (Each Gun)	
When circuit design utilizes Grid No. 1-to Cathode Voltage (E_{c1k}) At Fixed Value for Raster Cutoff	See Chart
Grid No. 1-to-Cathode Voltage (Each Gun)	
For Visual Extinction of Focused Raster when Circuit Design Utilizes Grid No. 2-to-Cathode Voltage (E_{c2k}) At Fixed Value	See Chart
Variation in Raster Cutoff Between Guns	
In Any Tube	±21% of average of highest and lowest cutoff values
Maximum Grid No. 3 Current for Anode Current of 800 μa	75 μa
Grid No. 2 Current (Each Gun)	−5 to +5 μa
Percentage of Total Anode Current Supplied by	
Each Gun to Produce Illuminant-C White:	
Red Gun	47 to 67 Percent
Blue Gun	11 to 24 Percent
Green Gun	20 to 33 Percent
Each Gun to Produce White of 8500° K:	
Red Gun	42 to 60 Percent
Blue Gun	12 to 27 Percent
Green Gun	23 to 38 Percent

EQUIPMENT DESIGN RANGES (Continued)

Maximum Raster Shift in Any Direction from Screen Center[4]

Maximum Compensation to be Provided by the following Components:

Purifying Magnet	Raster shift of 1 Inch in any direction from screen center
Magnetic-Field Equalizer	Beam displacement with respect to phosphor dot at edge of screen
Tangential	±0.0005 to ±0.007 Inches
Radial	±0.0005 to ±0.005 Inches

Lateral-Converging Magnet:[5 & 6]
After adjustment has been made for color purity and dynamic convergence

Max. shift of blue beam	±1/4 Inch
Max. shift of red and green beams	±1/8 to ±3/8 Inch
Average of Max. shift of red and green beams	±7/32 to ±9/32 Inch

Radial-Converging Magnet Assembly:[5]

For static convergence after adjustment has been made for optimum color purity and dynamic convergence (Each Beam)	Shift of ±5/8 Inch

For dynamic convergence[7]
Effected by mmf of approximately parabolic and/or sawtooth waveshape synchronized with scanning

Horizontal:

Blue Pattern	
Parabola Amplitude to provide[8]	Shift of 1/4 to 9/16 Inch
Sawtooth Amplitude to provide[9]	Shift of ±50% of the shift caused by Parabola Amplitude
Red pattern and green pattern	
Parabola:	
Amplitude to provide[8]	Shift of 1/8 to 3/8 Inch
Ratio of red-pattern shift to green-pattern shift	1/2 to 2
Sawtooth:	
Amplitude for red-pattern to provide[9]	Shift of −35% to +85% of the shift caused by Parabola Amplitude.
Amplitude for green-pattern to provide[9]	Shift of −85% to +35% of the shift caused by Parabola Amplitude.
Difference between red-pattern shift and green-pattern shift ($Shift_R - Shift_G$)	0 to +100 Percent

Vertical:

Blue pattern	
Parabola:	
Amplitude to provide[8]	Shift of 0 to 1/8 Inch
Sawtooth:	
Amplitude to provide[9]	Shift of 0 to 1/4 Inch
Red pattern and green pattern	
Parabola:	
Amplitude to provide[8]	Shift of 1/8 to 3/8 Inch
Ratio of red-pattern shift to green-pattern shift	1/2 to 2
Sawtooth:	
Amplitude to provide[9]	Shift of −1/8 to +3/8
Difference between red-pattern shift and green-pattern shift ($Shift_R - Shift_G$)	0 to +100 Percent

EXAMPLES OF USE DESIGN RANGES (For Anode Voltage of 25,000 VOLTS)

Grid No. 3 (Focusing Electrode)-to-Cathode (Of Each Gun) Voltage	3800 to 5300 Volts
Grid No. 2-to-Cathode Voltage (Each Gun) When Circuit Design Utilizes Grid No. 1-to-Cathode Voltage of −70 Volts for Raster Cutoff	130 to 370 Volts
Grid No. 1-to-Cathode Voltage (Each Gun) For Visual Extinction of Focused Raster When Circuit Design utilizes Grid No. 2-to-Cathode Voltage of 200 Volts	−45 to −100 Volts

LIMITING CIRCUIT VALUES

High Voltage Circuits

In order to minimize the possibility of damage to the 21AXP22 caused by a momentary internal arc, it is recommended that the anode power supply and the Grid No. 3 power supply be of the limited-energy type with inherent regulation to limit the continuous short-circuit current to 50 milliamperes. In addition, to prevent cathode damage with resultant decrease in tube life, the effective resistance between the anode power supply output capacitor and the anode, and the effective resistance between Grid No. 3 power supply output capacitor and the Grid No. 3 electrode should be not less than 50000 ohms. These resistances should be capable of withstanding the maximum instantaneous currents and voltages in their respective circuits. It is to be noted that the effectiveness of the resistance between the anode power supply output capacitor and the anode may be impaired if capacitance in excess of 750 $\mu\mu$f is introduced between the tube and ground by the mounting arrangement of the tube.

For the 21AXP22A, the need for an external resistor between the anode power supply and the tube is eliminated by the addition of an internal neck coating which has a high resistance.

In equipment utilizing a well-regulated anode power supply, the Grid No. 3 circuit resistance should be limited to 7.5 megohms.

Low Voltage Circuits

Grid No. 1 Circuit Resistance (Each Gun)	1.5 Megohms Max.

When the cathode of each gun is not connected directly to the heater, the Grid No. 2-to-heater circuit, the Grid No. 1-to-heater circuit, and the cathode-to-heater circuit should each have an impedance such that their respective power sources in combination will not supply an instantaneous or continuous short-circuit current of more than 300 milliamperes total. Such current limitation will prevent heater burnout in case of a momentary internal arc within the tube.

When the cathode is connected directly to the heater, the Grid No. 2-to-heater circuit, and the Grid No. 1-to-heater circuit should each have an impedance such that their respective power sources in combination will not supply an instantaneous or continuous short-circuit current of more than 300 milliamperes total. Such current limitation will prevent heater burnout in case of a momentary internal arc within the tube.

NOTES:

1. *The anode in a cathode-ray tube is the electrode to which is applied the highest dc voltage for accelerating the electrons in the beam prior to its deflection. In this tube the anode function is performed by Grid No. 4. Since Grid No. 4, Grid No. 5, and collector are connected together within the tube, they are collectively referred to simply as anode for convenience in presenting data.*
2. *A value of average anode current higher than 500 microamperes per gun will increase picture brightness but may impair resolution and shorten cathode life.*
3. *Brilliance and definition decrease with decreasing anode voltage. In general, the anode voltage should not be less than 20,000 volts.*
4. *Centering of the raster on the screen is accomplished by passing direct current of the required value through each pair of deflecting coils to compensate for raster shift resulting from adjustments for optimum convergence and color purity.*
5. *Shift is the movement of the regions of bar-or-dot generator pattern indicated in Notes 8 and 9.*
6. *The direction of movement of the red and green beam is opposite to that of the blue beam.*
7. *Indicated values apply when test yoke is used with 21AXP22A.*
8. *The parabola amplitude is determined by the average value of the shifts at the extremities of the respective horizontal and vertical axes of the screen with convergence of the three beams maintained at the center of the screen. An increase in amplitude should move the blue beam toward the top of the screen; and the red beam toward the lower left of the screen; and the green beam toward the lower right of the screen.*
9. *The sawtooth amplitude is determined by the difference between the shifts at the extremities of the respective horizontal and vertical axes of the screen. Positive amplitude indicates that the shift at the right or bottom of the screen is greater than the shift at the left or top of the screen.*

GENERAL CONSIDERATIONS

The absolute-maximum ratings in the tabulated data are limiting values beyond which the serviceability of the tube may be impaired from the viewpoint of life and satisfactory performance. The equipment designer must establish the circuit design so that initially and throughout tube and equipment life, no absolute-maximum value is exceeded under the worst probable operating conditions with respect to supply voltage variation, equipment component variation, equipment control adjustment, load variation, signal variation, environmental conditions, and variation in tube characteristics.

X-RAY WARNING. X-ray radiation is produced by the tube when it is operated at its normal anode voltage. The radiation is through the faceplate and is sufficient to require the adoption of safety measures. Simple shielding, such as that provided by a ¼-inch thickness of safety glass (lime), in front of the faceplate, should prove adequate to provide protection against personal injury from prolonged exposure at close range when the tube is operated at its maximum anode voltage rating.

When this tube is being serviced outside of the TV receiver cabinet, it should never be operated without providing adequate X-ray shielding in front of the faceplate. Because the anode voltage may rise above its maximum rated value for short periods during adjustment with increase in the amount of X-ray radiation, provision should be made for placing a ⅜ inch thickness of safety glass in front of the faceplate to avoid the hazard of X-ray radiation.

HIGH VOLTAGES. The high voltage at which cathode-ray tubes are operated may be very dangerous. Great care should be taken in the design of apparatus to prevent the operator from coming in contact with the high voltages. Precautions include the enclosing of high-potential terminals and the use of interlocking switches to break the primary circuit of the power supply when access to the equipment is required.

METAL SHELL. The metal shell of the tube operates at high voltage. After power is turned off, the metal shell should be grounded before it is touched.

CORONA CONSIDERATIONS. Adequate spacing between the lip of the metal shell and any grounded element in the receiver, or between the small end of the metal shell and any grounded element, should be provided to preclude the possibility of corona. Similarly, adequate air spacing, or equivalent, should be provided around the body of the metal shell.

ANODE CONNECTION. Anode connection may be made to any part of the metal envelope. A spring-type contact may be incorporated on the inside of the tube insulating boot or contact may be made to the metal-shell lip. With either method, adequate insulation and freedom from corona discharge must be provided in the design of the contact and its associated lead wire. The decorative paint on the metal envelope will not prevent a good electrical connection from being made provided the contact is under pressure.

INSULATING MATERIAL FOR EXTERNAL MASK. The external mask should be made only of insulating material. This material should provide insulation for the full applied anode voltage. Mask material providing the specified insulation can bear directly against the faceplate.

SHATTER-PROOF COVER OVER THE TUBE FACE. Following conventional practice, it is recommended that the cabinet be provided with a shatter-proof, clear glass cover over the face of the tube to protect it from being struck accidentally and to protect against possible damage resulting from tube implosion under some abnormal condition. This safety cover can also provide the necessary X-ray protection recommended under X-RAY WARNING.

TUBE HANDLING. Care should be taken to prevent bumping or striking of lip of the tube. Rough treatment may damage the faceplate seal.

Always handle the tube by the shell. Do not handle the tube by the neck or that part having the insulating coating. Finger prints or dust on the insulating coating may cause electrical breakdown during humid weather.

DEFLECTING YOKE. It is recommended that the deflecting yoke be insulated from the neck and funnel of the tube by an insulating liner. The liner should be made of material of such thickness that the yoke will be held back from the funnel no more than 3/32 inch when located in its most forward position. The liner should be capable of providing insulation for approximately one-half the maximum applied anode voltage.

In supporting the yoke, provision should be made to allow it to move freely along the neck for a distance of ⅝ inch from its most forward position.

MAGNETIC-FIELD EQUALIZER ASSEMBLY. Use of adjustable magnets located peripherally at the front end of the tube provides sectionalized magnetic fields to eliminate the need for a magnetic shield over the body of the tube and to permit compensation in localized areas for the effects of stray magnetic fields and of the earth's magnetic field on color purity.

DEGAUSSING PROCEDURE.—For the 21AXP22 and 21AXP22A. After the tube and components are in place, and before voltages are applied to the receiver, a degaussing coil, consisting of about 425 turns of No. 20 enameled wire wound 12 inches in diameter and connected directly to a 115 V ac outlet, should be passed in front of the tube faceplate several times. It should be slowly withdrawn to a distance of about six feet and then turned on its axis 90 degrees before the current is turned off. For optimum performance, the above procedure must be repeated every time the tube or receiver is moved.

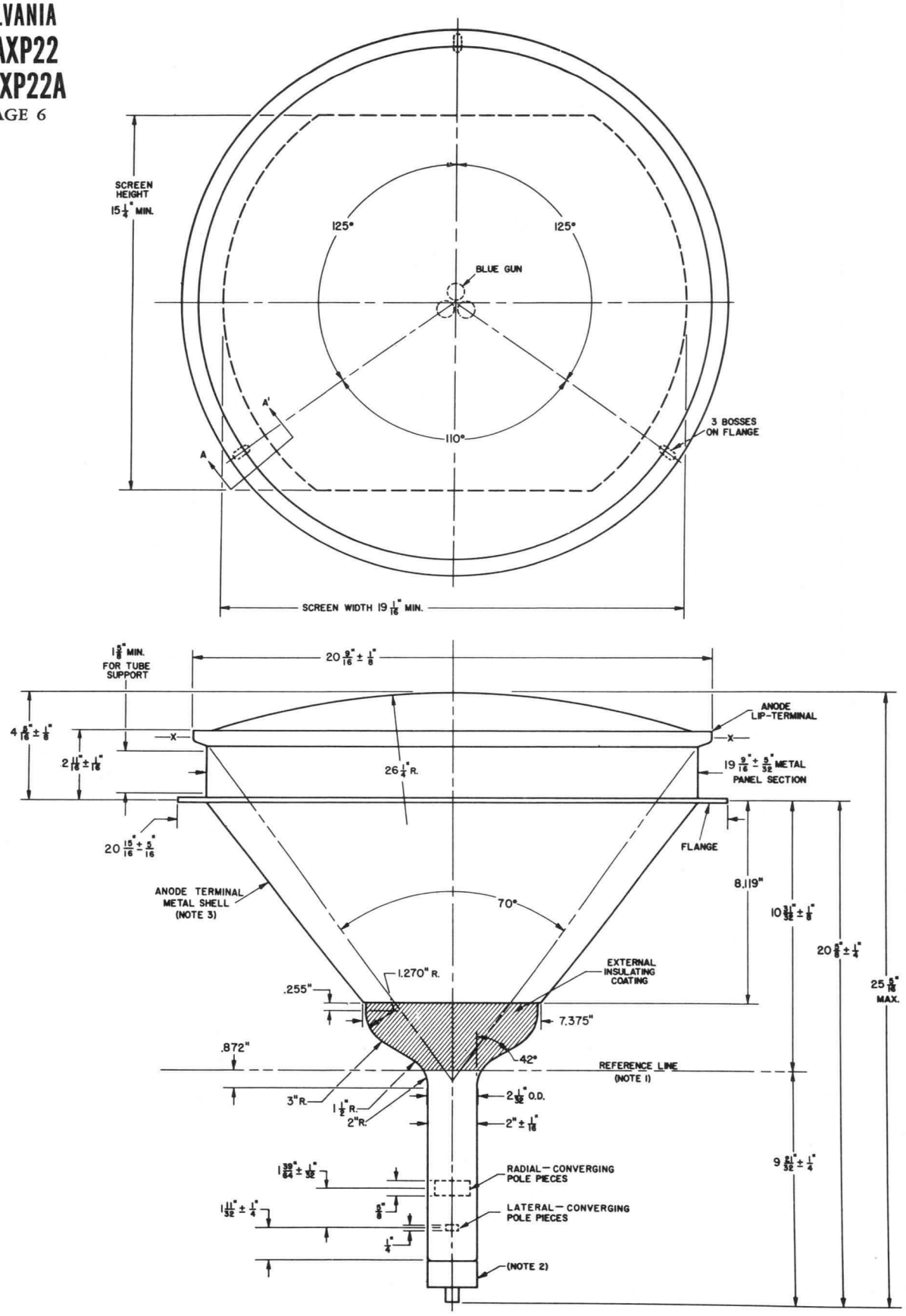

DIAGRAM NOTES:

1. *With tube neck inserted through flared end of reference-line and neck-funnel-contour gauge and with tube seated in gauge, the reference line is determined by the intersection of the plane C-C' of the gauge with the glass funnel.*
2. *Socket for this base should not be rigidly mounted; it should have flexible leads and be allowed to move freely. Bottom circumference of base shell will fall within a circle concentric with metal-shell axis and having a diameter of 3 inches.*
3. *Metal shell and glass face operate at high voltage. Any material in contact with the shell or face must be insulated to withstand the maximum applied anode voltage.*

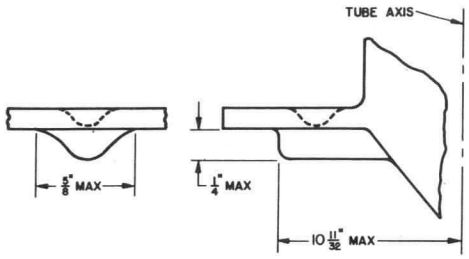

EXTERNAL VIEW AT A-A'
DETAIL OF FLANGE BOSSES

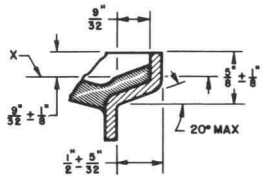

DETAIL OF LIP

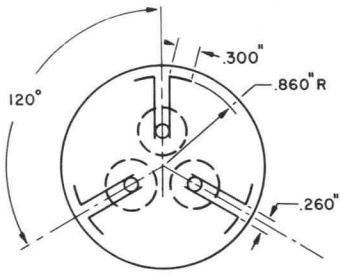

LOCATION OF RADIAL
CONVERGING POLE PIECES

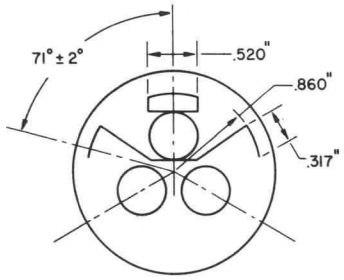

LOCATION OF LATERAL
CONVERGING POLE PIECES

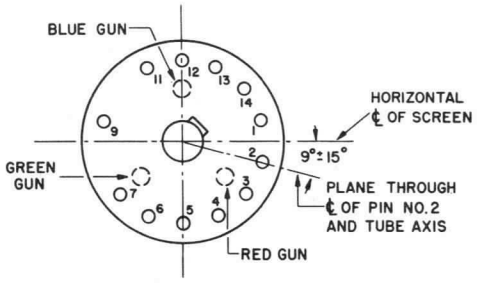

BASE
BOTTOM VIEW

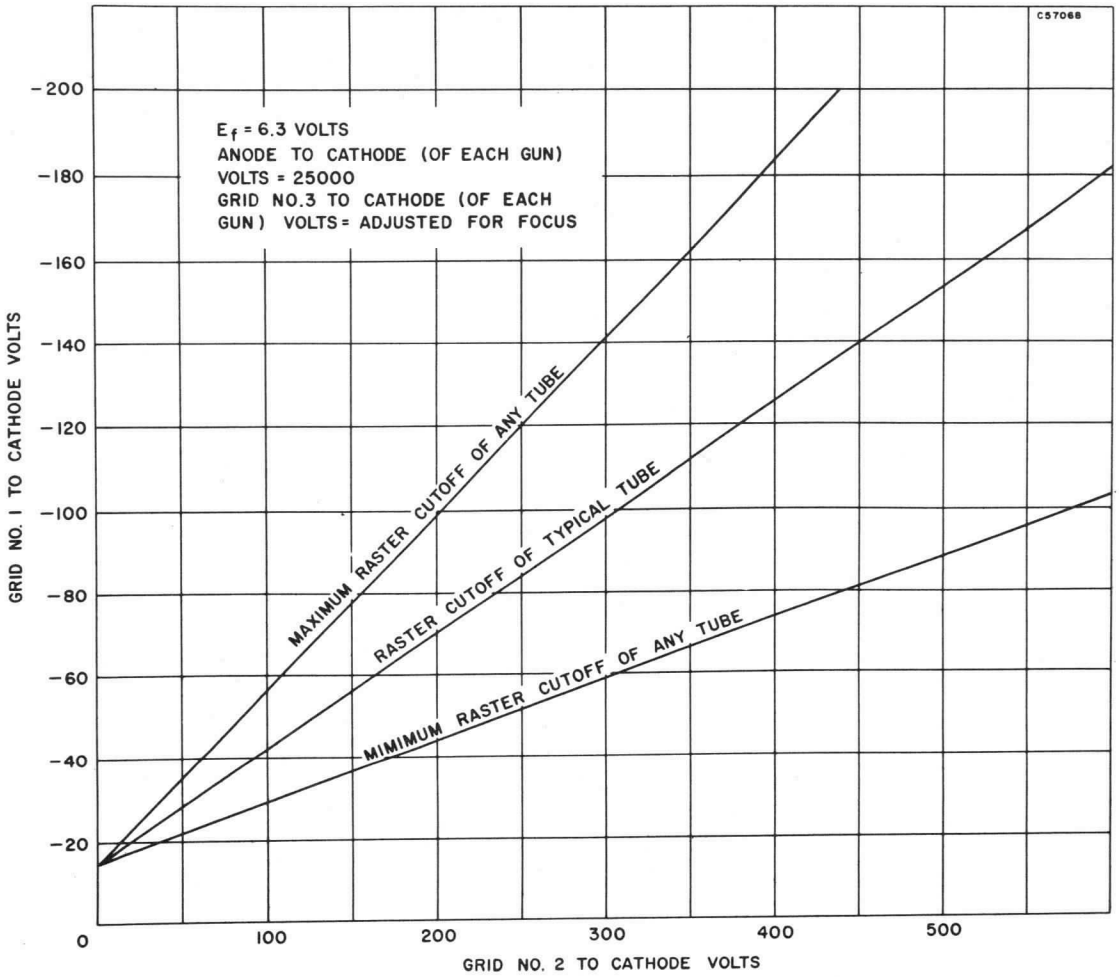

REFERENCE-LINE AND NECK-FUNNEL-CONTOUR GAUGE

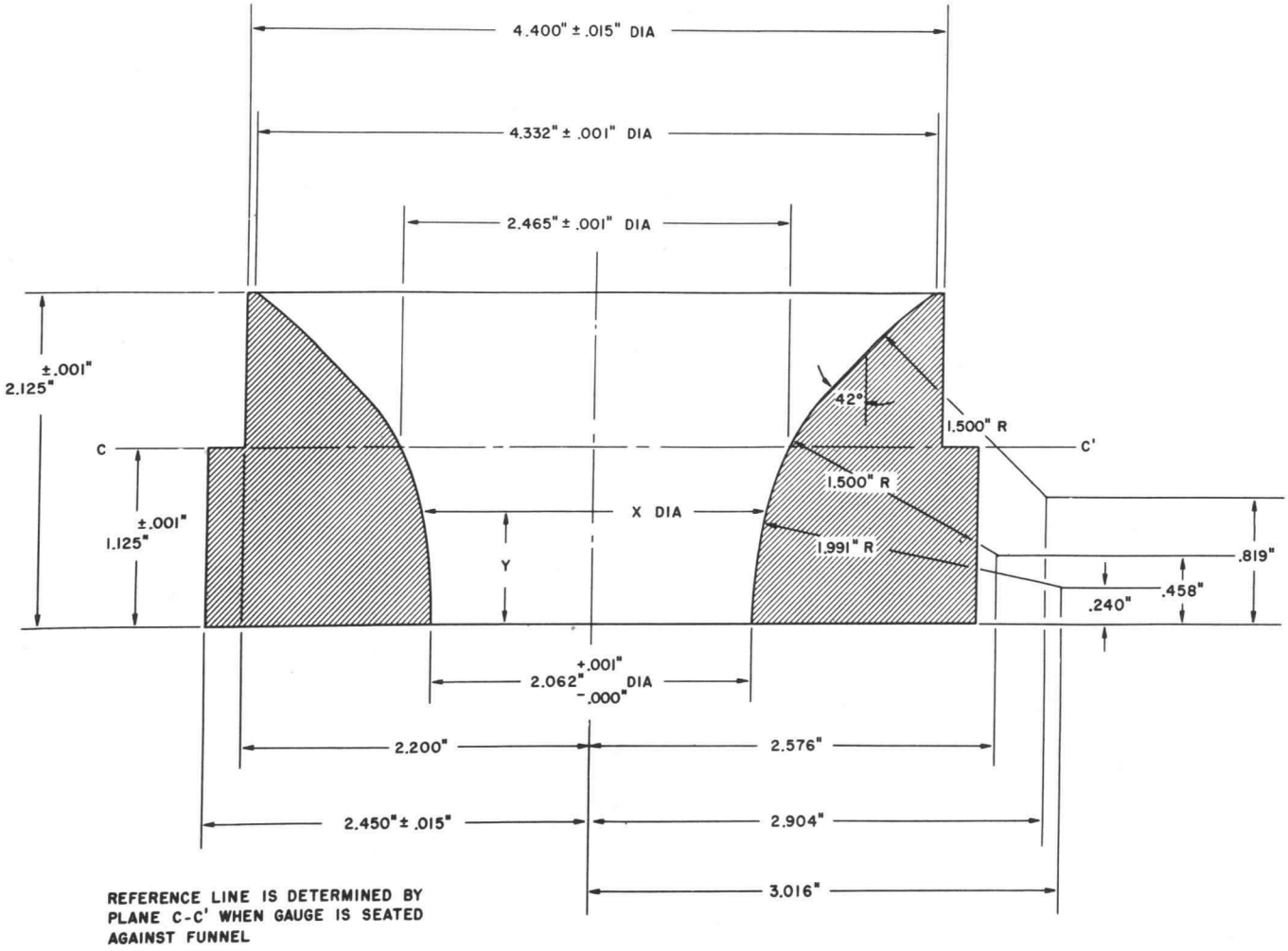

REFERENCE LINE IS DETERMINED BY PLANE C-C' WHEN GAUGE IS SEATED AGAINST FUNNEL

Y	X
0.000″	2.062″ $^{+\ 0.001''}_{-\ 0.000''}$
0.125″	2.062″ $^{+\ 0.001''}_{-\ 0.000''}$
0.250″	2.062″ $^{+\ 0.001''}_{-\ 0.000''}$
0.375″	2.062″ $^{+\ 0.001''}_{-\ 0.000''}$
0.385″	2.062″ $^{+\ 0.001''}_{-\ 0.000''}$
0.500″	2.084″ ± 0.001″
0.625″	2.122″ ± 0.001″
0.750″	2.182″ ± 0.001″
0.875″	2.258″ ± 0.001″
1.000″	2.352″ ± 0.001″

Y	X
1.125″	2.465″ ± 0.001″
1.250″	2.604″ ± 0.001″
1.375″	2.778″ ± 0.001″
1.500″	2.990″ ± 0.001″
1.625″	3.216″ ± 0.001″
1.750″	3.440″ ± 0.001″
1.875″	3.678″ ± 0.001″
2.000″	3.958″ ± 0.001″
2.125″	4.332″ ± 0.001″

SYLVANIA

engineering data service

SYLVANIA

21CBP4
21CBP4A

CHARACTERISTICS

GENERAL DATA

Focusing Method	Electrostatic
Deflection Method	Magnetic
Deflection Angles (approx.)	
Horizontal	85 Degrees
Diagonal	90 Degrees
Phosphor	Aluminized P4
Fluorescence	White
Persistence	Short to Medium
Faceplate	Gray Filter Glass
Light Transmittance (approx.)	74 ±3 Percent

ELECTRICAL DATA

Heater Voltage	6.3 Volts	
Heater Current	0.6 ±5% Ampere	
Heater Warm-up Time[1]	11 Seconds	
Direct Interelectrode Capacitances (approx.)		
Cathode to All Other Electrodes	5 μμf	
Grid No. 1 to All Other Electrodes	6 μμf	
External Conductive Coating to Anode[2]	2500 μμf	Max.
	2000 μμf	Min.

MECHANICAL DATA

Minimum Useful Screen Dimensions	19 1/16 x 15 1/16 Inches
Minimum Useful Screen Area	262 Sq. Inches
Bulb Contact (Recessed Small Cavity Cap)	J1-21
Base (Small Shell Duodecal 6-Pin)	B6-63
Basing	12L

RATINGS

MAXIMUM RATINGS (Absolute Maximum Values)

Anode Voltage	22,000 Volts	dc
Grid No. 4 Voltage (Focusing Electrode)	−550 to +1100 Volts	dc
Grid No. 2 Voltage	550 Volts	dc
Grid No. 1 Voltage		
Negative Bias Value	155 Volts	dc
Negative Peak Value	220 Volts	
Positive Bias Value	0 Volts	dc
Positive Peak Value	2 Volts	
Peak Heater-Cathode Voltage		
Heater Negative with Respect to Cathode During Warm-up Period Not to Exceed 15 Seconds	450 Volts	
After Equipment Warm-up Period	200 Volts	
Heater Positive with Respect to Cathode	200 Volts	

TYPICAL OPERATING CONDITIONS

Anode Voltage	16,000 Volts	dc
Grid No. 4 Voltage	−50 to +350 Volts	dc
Grid No. 2 Voltage	300 Volts	dc
Grid No. 1 Voltage Required for Cutoff[3]	−28 to −72 Volts	dc

QUICK REFERENCE DATA

Television Picture Tube
21" Direct Viewed
Rectangular Glass Type
Spherical Faceplate
Gray Filter Glass
Magnetic Deflection
Electrostatic Focus
No Ion Trap
External Conductive Coating
Aluminized Screen

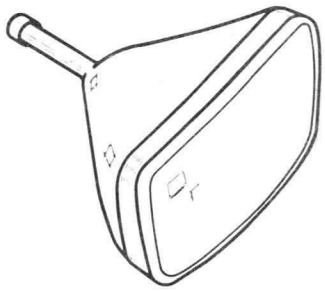

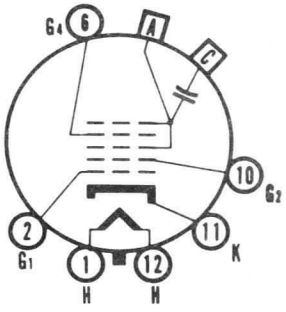

12-L

SYLVANIA ELECTRIC PRODUCTS INC.
TELEVISION PICTURE TUBE DIVISION
SENECA FALLS, NEW YORK

Prepared and Released By The TECHNICAL PUBLICATIONS SECTION EMPORIUM, PENNSYLVANIA
JULY, 1957

CIRCUIT VALUES

Grid No. 1 Circuit Resistance	1.5 Megohms Max.

NOTES:

1. *Heater warm-up time is the time required for the voltage across the heater terminals to increase to 5.0 volts in the JETEC test circuit, with E = 25 volts and series R = 31.5 ohms.*
2. *External conductive coating must be grounded.*
3. *Visual extinction of focused raster. Extinction of stationary focused spot will require that these values be about 5 volts more negative.*

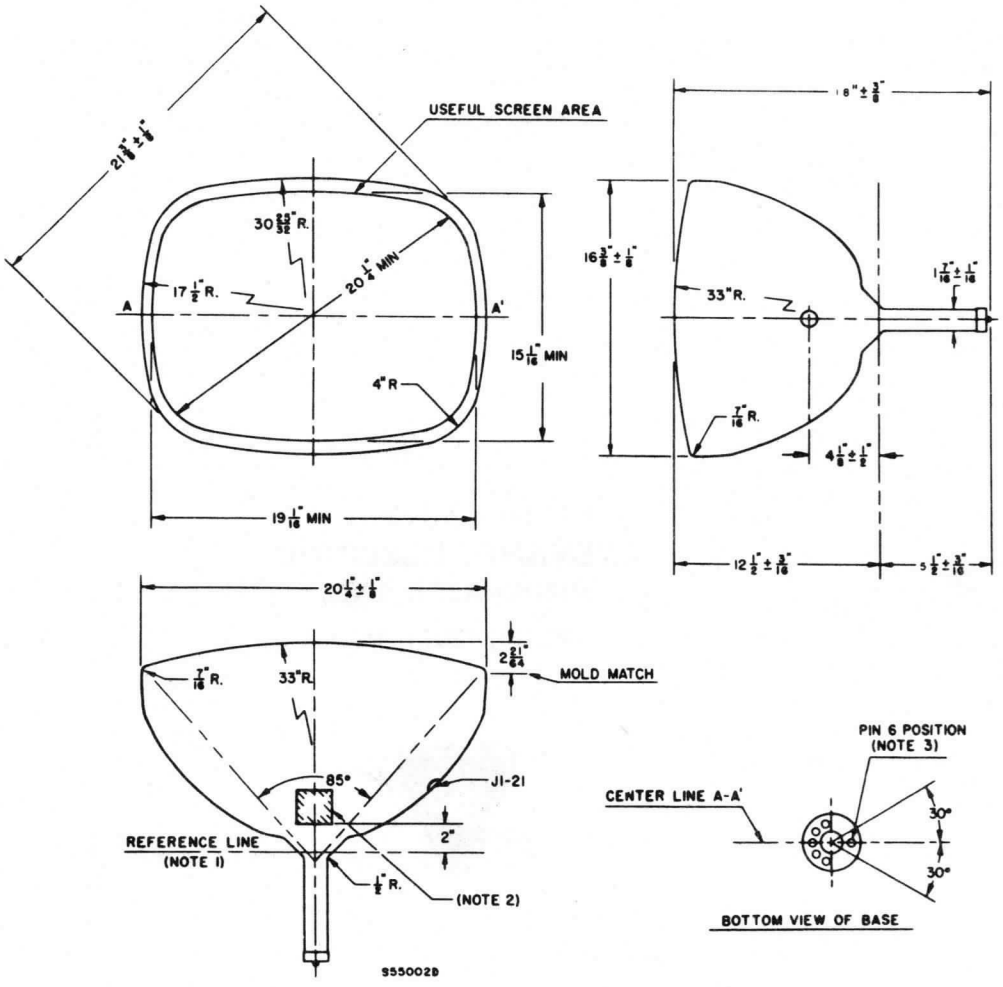

DIAGRAM NOTES:

1. *Reference line is determined by the plane C-C¹ of the reference line gauge (JETEC No. 116) when the gauge is resting on the glass cone.*
2. *Contact area for external conductive coating, 2'' x 2'', located 90° counterclockwise from anode contact as viewed from base end of tube.*
3. *Anode contact aligns with pin position No. 6 ±30 degrees.*

WARNING:

X-ray radiation shielding may be necessary to protect against possible danger of personal injury from prolonged exposure at close range if this tube is operated at higher than the manufacturer s Maximum Rated Anode Voltage or 16,000 volts, whichever is less.

A Technical Publication of

SYLVANIA ELECTRIC
PRODUCTS INC.

EMPORIUM, PA.

SYLVANIA

engineering data service

SYLVANIA
21CYP22
21CYP22A
21FBP22
21FJP22
21FKP22

GENERAL INFORMATION

The Sylvania Types 21CYP22, 21CYP22A, 21FBP22, 21FJP22, and 21FKP22 are direct viewed round glass picture tubes for use in color television receivers. They are capable of producing either a full color or black and white picture measuring 19 ¼ x 15 ½ inches with rounded sides and having a projected area of 261 square inches.

These tubes utilize three electrostatic focus guns spaced 120 degrees apart with axes tilted toward the tube axis to facilitate convergence of the three beams at the shadow mask; individual convergence control of each beam radially by internal magnetic poles; and supplemental control of the three beams horizontally by internal magnetic poles; and an assembly consisting of a spherical metal graded-hole shadow mask and a tri-color, phosphor dot screen on the inner surface of the spherical Filterglass faceplate.

The tri-color, phosphor dot screen is composed of an orderly array of small, closely spaced, phosphor dots arranged in triangular groups. Each group consists of a green-emitting dot, a red-emitting dot, and a blue-emitting dot, and is aligned with a corresponding hole in the shadow mask.

CHARACTERISTICS

GENERAL DATA

Focusing Method	Electrostatic
Deflection Method	Magnetic
Convergence Method	Magnetic
Deflection Angles (Approx.)	
Horizontal	70 Degrees
Vertical	55 Degrees
Screen Type	Aluminized, Three-Color, Phosphor Dot
Phosphor, Blue-Green-Red Dots	P22
Persistence	Medium
Arrangement	Triangular Groups Each Consisting of Blue Dot, Green Dot and Red Dot
Spacing Between Center of Adjacent Dot Trios (Approx.)	.029 Inches
Faceplate (Spherical)	Filter Glass
Light Transmittance (Approx.)	
Faceplate (21FBP22, 21FJP22, 21FKP22)	73 ½ ± 3 Percent
Faceplate (21CYP22A)	72 Percent
Bonded Shield (21FJP22, 21FKP22)	61 Percent
Combined Faceplate and Bonded Shield (21FJP22, 21FKP22)	45 ± 4 Percent

Surface of Bonded Shield (21FJP22) Treated to Reduce Specular Reflection.

ELECTRICAL DATA

	21FBP22 21FJP22 21FKP22	21CYP22A	
Heater Voltage (±10 %)	6.3	6.3 Volts	
Heater Current (Approx.)	1.8	1.6 Amperes	
Direct Interelectrode Capacitances (Approx.)			
Grid No. 1 of Any Gun to All Other Electrodes (Except Grid No. 1 of Other Guns)	10	7 pf	
Cathode of Blue Gun + Cathode of Green Gun + Cathode of Red Gun to All Other Electrodes	16	16 pf	
Grid No. 3 (Of All Guns Tied Together) to All Other Electrodes	9	9 pf	
Ex. Conductive Coating to Anode	2500	2500 pf	Max.
	2000	2000 pf	Min.

QUICK REFERENCE DATA

Color Television Picture Tube
21″ Direct Viewed
Round Glass Type
Magnetic Deflection
Filter Glass
Spherical Faceplate
Electrostatic Focus
Magnetic Convergence
Aluminized Screen
Three Electron Gun Type
21CYP22A supersedes and replaces 21CYP22
21FJP22, 21FKP22: Bonded Shield
21FJP22: Anti-Reflection Treated

21CYP22A

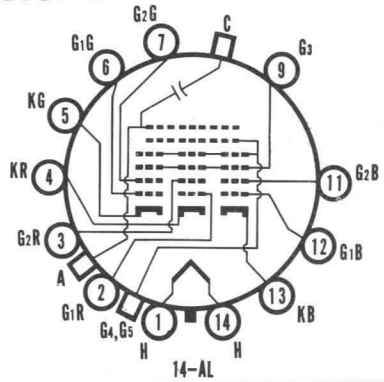

14-AL

21FBP22
21FJP22
21FKP22

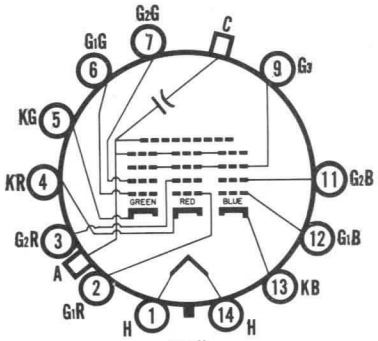

14AU

SYLVANIA
ELECTRONIC TUBES

A Division of
Sylvania Electric Products Inc.

PICTURE TUBE
OPERATIONS

SENECA FALLS, NEW YORK

Prepared and Released By The
TECHNICAL PUBLICATIONS SECTION
EMPORIUM, PENNSYLVANIA

SEPTEMBER, 1963

File Under
TELEVISION PICTURE TUBES

MECHANICAL DATA

	21FJP22 21FKP22	21CYP22A 21FBP22
Minimum Useful Screen Dimensions (Maximum Assured)	19 ¼ x 15 ½	19 ¼ x 15 ½ Inches
Minimum Useful Screen Area	261	261 Sq. Inches
Overall Length	$25\frac{9}{32} \pm \frac{3}{8}$	$25\frac{1}{32} \pm \frac{3}{8}$ Inches
Diameter	21 Max.	$20\frac{13}{16} \pm \frac{1}{8}$ Inches
Anode Terminal (Recessed Small Cavity)	J1-21	J1-21
Base (Small Shell Neodiheptal 12-Pin)	B12-131	B12-131
Basing	14AU	14AU for 21FBP22 14AL for 21CYP22A
Operation Position (Base Pin 12 and V Grooved Panel Pad on Top)	Tube Axis Horizontal	
Weight (Approx.)	43	36 ½ Pounds

RATINGS

Unless otherwise specified, voltage values are positive with respect to cathode of specified gun

MAXIMUM RATINGS (Design Maximum Values)

	21FBP22 21FJP22 21FKP22	21CYP22A See Note 5	
Anode[1]-to-Cathode (Of Each Gun) Voltage	27,500	27,500 Volts	Max.
Grid No. 3-to-Cathode (Of Each Gun) Voltage	6000	6600 Volts	Max.
Grid No. 2-to-Cathode Voltage + Video Signal Voltage (Each Gun)	1000	660 Volts	Max.
Grid No. 1-to-Cathode Voltage (Each Gun)			
Operating Cutoff Value	200	Volts	
Negative Bias Value	400	440 Volts	Max.
Positive Bias Value	0	0 Volt	Max.
Positive Peak Value	2	2 Volts	Max.
Peak Heater-Cathode Voltage (Each Gun)			
Heater Negative with Respect to Cathode			
During Warm-up Period Not to Exceed 15 Seconds	450	450 Volts	Max.
After Equipment Warm-up Period	200	200 Volts	Max.
Heater Positive with Respect to Cathode	200	200 Volts	Max.
Maximum Anode Current, Long Term Average	1000	μa	

EQUIPMENT DESIGN RANGES

Anode Voltage (Ec4k Each Gun) Between 20,000[2] and 27,500 Volts (21CYP22A, 21FBP22, 21FJP22, 21FKP22)

Grid No. 3 (Focusing Electrode)-to-Cathode (Of Each Fun) Voltage . . . . . 16.8 % to 20 % of Ec4k Each Gun Volts

Grid No. 2-to-Cathode Voltage (Each Gun)
When Circuit Design Utilizes Grid No. 1-to-Cathode Voltage (Ec1K) of 70 Volts for Raster Cutoff . . . . . 130 to 370 Volts

Grid No. 2-to-Cathode Voltage (Each Gun)
When Circuit Design Utilizes Grid No. 1-to-Cathode Voltage (Ec1K) of 165 Volts for Raster Cutoff . . . . . 355 to 1010 Volts

Grid No. 1-to-Cathode Voltage (Each Gun)
For Visual Extinction of Focused Raster when Circuit Design Utilizes Grid No. 2-to-Cathode Voltage (Ec2K) of 200 Volts . . . . . −45 to −100 Volts

Grid No. 1-to-Cathode Voltage (Each Gun)
For Visual Extinction of Focused Raster when Circuit Design Utilizes Grid No. 2-to-Cathode Voltage (Ec2K) of 550 Volts . . . . . −96 to −246 Volts

EQUIPMENT DESIGN RANGES (Cont'd)

Variation in Raster Cutoff Between Guns in Any Tube	±21 % of Average of Highest and Lowest Cutoff Values	
Grid No. 3 Current	−45 to +45 μa	
Grid No. 2 Current (Each Gun)	−5 to +5 μa	
	21FBP22 21FJP22 21FKP22	**21CYP22A (8500°K + 27MPCD)**
Percentage of Total Anode Current Supplied by Each Gun to Produce White of 9300°K + 27MPCD (CIE Coordinates: X=.281; Y=.311)		
Red Gun	42	49 Percent
Blue Gun	28	18 Percent
Green Gun	30	33 Percent
Ratio of Cathode Currents (Typical) Each Gun to Produce White of 9300°K + 27MPCD		
Red to Green	1.4	1.5
Red to Blue	1.5	2.7
Maximum Raster Centering Correction in Any Direction	7/8 In.	7/8 Inch
Maximum Compensation to be Provided by the Following Components: Purifying Magnet Maximum Required Displacements of Beam Trios in Any Direction with Respect to Associated Phosphor Dot Trios	0.005 In.[4]	0.005 Inch[4]
Lateral-Converging Magnet After Adjustment has been made for Color Purity and Dynamic Convergence (Maximum Lateral Shift of Blue Beam)	± ¼ In.	± ¼ Inch
Radial-Converging Magnet Assembly For Static Convergence after Adjustment has been made for Optimum Color Purity and Dynamic Convergence (Each Beam)	Shift of ±5/8 In.	Shift of ±5/8 Inch

EXAMPLES OF USE DESIGN RANGES

	For All Types	
Anode Voltage	20,000	25,000 Volts
Grid No. 3 (Focusing Electrode)-to-Cathode (Of Each Gun) Voltage	3360 to 4000	4200 to 5000 Volts
Grid No. 2- to-Cathode Voltage (Each Gun) When Circuit Design Utilizes Grid No. 1-to-Cathode Voltage of −70 Volts for Raster Cutoff	130 to 370	130 to 370 Volts
Grid No. 2-to-Cathode Voltage (Each Gun) When Circuit Design Utilizes Grid No. 1-to-Cathode Voltage of −165 Volts for Raster Cutoff	355 to 1010	355 to 1010 Volts
Grid No. 1-to-Cathode Voltage (Each Gun) For Visual Extinction of Focused Raster When Circuit Design Utilized Grid No. 2-to-Cathode Voltage of 200 Volts	−45 to −100	−45 to −100 Volts
Grid No. 1-to-Cathode Voltage (Each Gun) For Visual Extinction of Focused Raster When Circuit Design Utilized Grid No. 2-to-Cathode Voltage of 550 Volts	−96 to −246	−96 to −246 Volts

LIMITING CIRCUIT VALUES

High Voltage Circuits

In order to minimize the possibility of damage to the tube caused by a momentary internal arc, it is recommended that the anode power supply and the Grid No. 3 power supply be of the limited-energy type. In equipment utilizing a well-regulated anode power supply, the Grid No. 3 circuit resistance should be limited to 7.5 Megohms.

Low Voltage Circuits

Grid No. 1 Circuit Resistance (Each Gun) . . . . . 0.75 Megohms Max.

When the cathode of each gun is not connected directly to the heater, the Grid No. 1-to-Heater Circuit, and the Cathode-to-Heater Circuit should each have an impedance such that their respective power sources in combination will not supply an instantaneous or continuous short-circuit current of more than 300 milliamperes total. Such current limitation will prevent heater burn-out in case of a momentary internal arc within the tube.

NOTES:

1. *The anode in a cathode-ray tube is the electrode to which is applied the highest d c voltage for accelerating the electrons in the beam prior to its deflection. In this tube the anode function is performed by Grid No. 4. Since Grid No. 4 and Grid No. 5 are connected together within the tube, they are collectively referred to simply as anode for convenience in presenting data.*
2. *Brilliance and definition decrease with decreasing anode voltage. In general, the anode voltage should not be less than 20,000 volts.*
3. *Centering of the raster on the screen is accomplished by passing direct current of the required value through each pair of deflecting coils. With all components properly adjusted, the raster centering correction is the distance from the undeflected focused beams to the center of the screen.*
4. *The equivalent raster movement is about ¾".*
5. *Between the anode terminal and the high voltage-supply terminal (see dimensional outline), it is necessary to connect a resistor of 50,000 ohms. The high voltage must be connected to the high voltage-supply terminal, never directly to the anode terminal.*

GENERAL CONSIDERATIONS

X-RADIATION WARNING. Because these tubes are designed to be operated at anode voltages as high as 27.5 kilovolts (design-maximum value), shielding of the bulb for X-radiation may be needed to protect against possible injury from prolonged exposure at close range.

TUBE HANDLING. The bulb should be handled carefully as required by any glass picture tube. Particular care should be taken to prevent damage to the seal area.

SHATTER-PROOF COVER OVER THE TUBE FACE. Following conventional picture tube practice, it is recommended that the cabinet be provided with a shatter-proof, glass cover over the face of the tube to protect it from being struck accidentally and to protect against possible damage resulting from tube implosion under some abnormal condition. This safety cover can also provide X-ray protection when required. This applies only to 21CYP22, 21CYP22A, and 21FBP22.

Types 21FJP22 and 21FKP22 have integral gray filter glass safety plate laminated directly to face of tube.

ORIENTATION. The tube must be operated with tube axis in a horizontal position and with the blue gun uppermost (i.e., base pin 12 and V-grooved panel pad on top). This operating position is required to take advantage of the correction built into the tube for the vertical component of the earth's magnetic field in the northern hemisphere, and is the position for which the beam-displacement values shown in this bulletin apply.

The deflection yoke should not be used for supporting the picture tube because it should be centered on the neck and be free to move along the neck for a distance of approximately ⅝ inch from its most forward position for adjustment purposes. The yoke mount should also provide for a small amount of rotational adjustment.

If a yoke liner is employed such as to support the yoke on the neck of the tube, the liner should be of such thickness that the yoke will be held back from the funnel no more than 3/32" when located in its most forward position.

MISREGISTER COMPENSATION. Proper operation requires compensation for the effects of extraneous magnetic fields, the earth's magnetic field, and other causes which may produce misregister. Compensation for these effects may be accomplished by the use of a purifying magnet.

The purifying magnet, designed to provide a magnetic field adjustable in magnitude and direction, effects register over the entire area of the screen.

OUTLINE
21CYP22, 21CYP22A

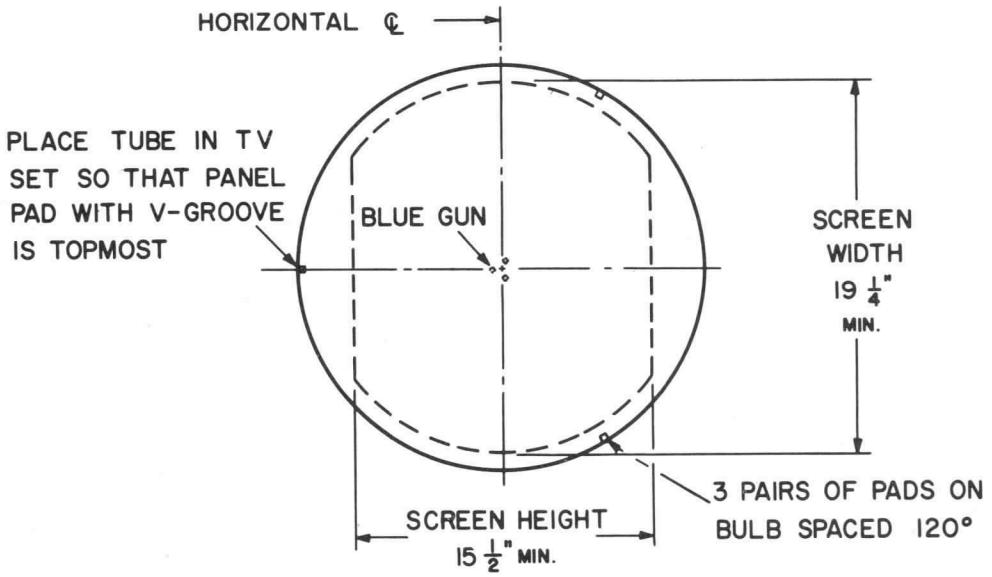

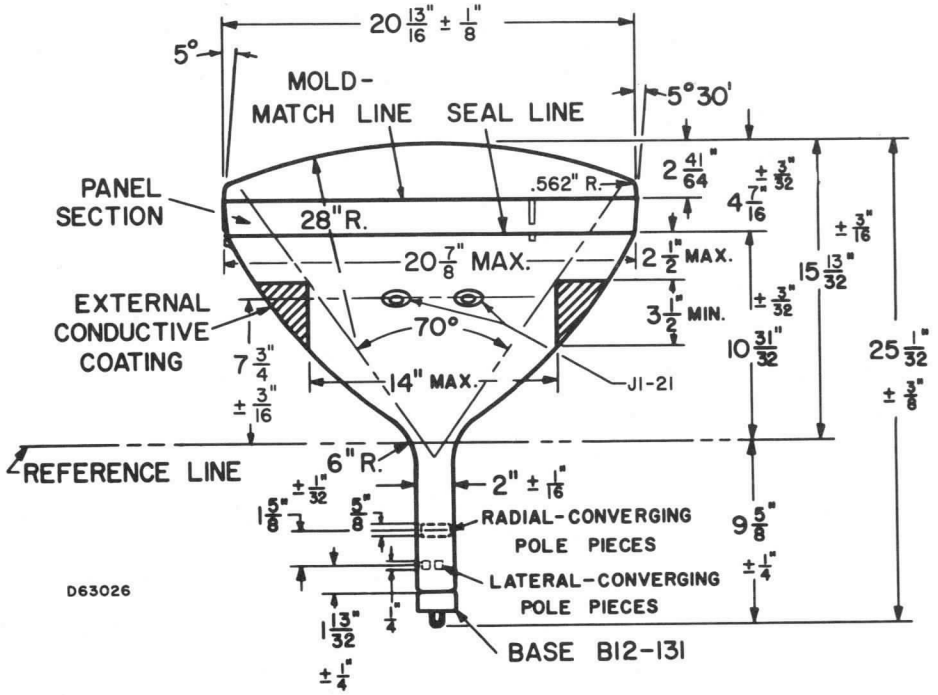

OUTLINE
21FBP22

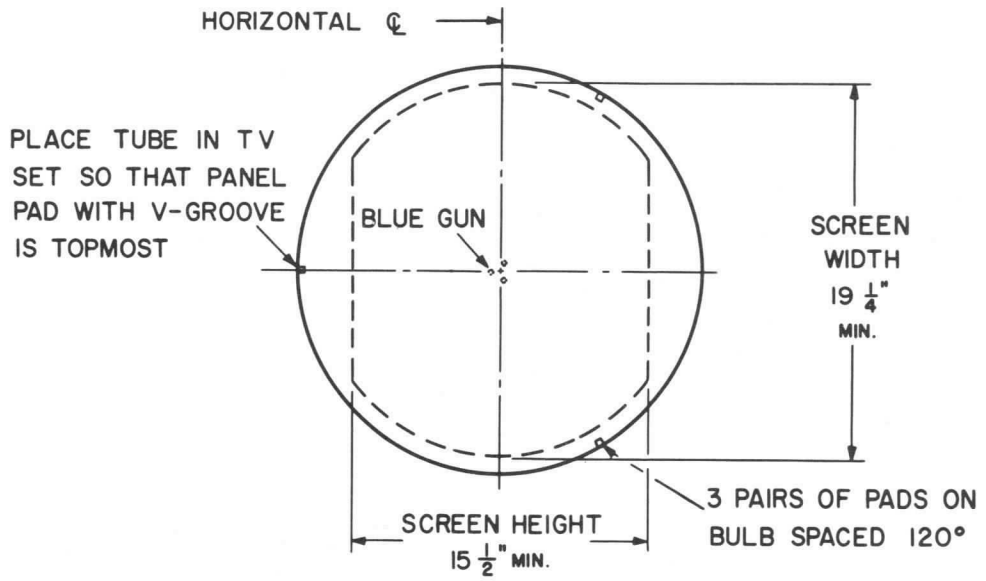

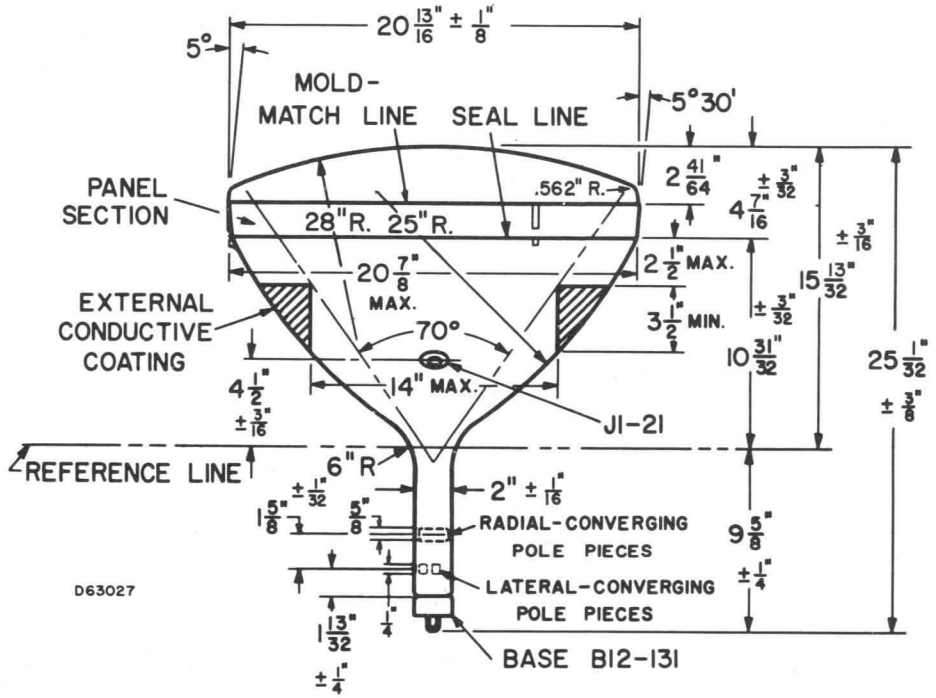

OUTLINE
21FJP22, 21FKP22

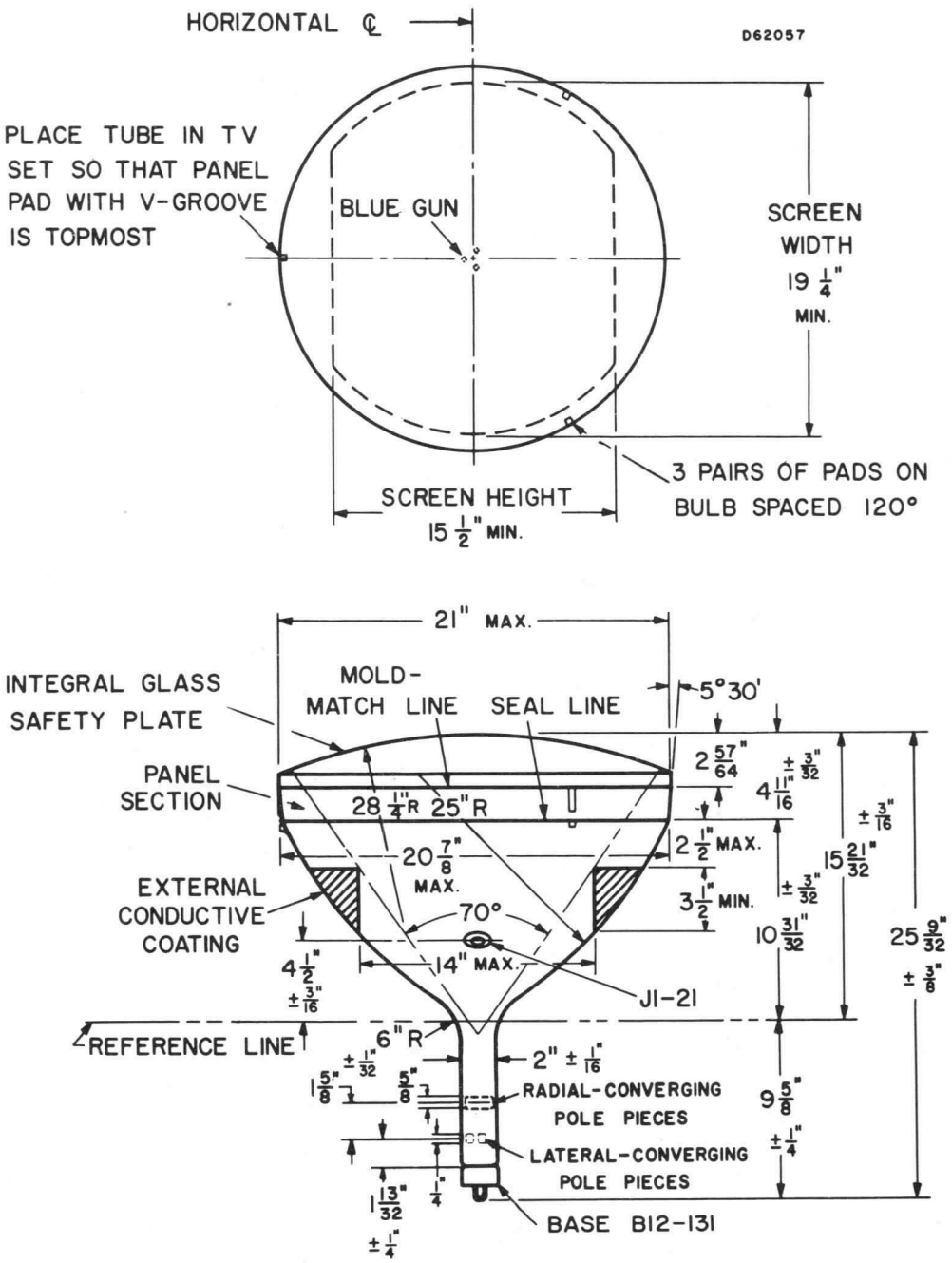

CHARACTERISTICS

GENERAL DATA

Focusing Method	Electrostatic
Deflection Method	Magnetic
Deflection Angles (approx.)	
Horizontal	105 Degrees
Diagonal	110 Degrees
Vertical	87 Degrees
Phosphor	Aluminized P4
Fluorescence	White
Persistence	Short to Medium
Faceplate	Gray Filter Glass
Light Transmittance (approx.)	76 Percent

ELECTRICAL DATA

Heater Voltage	6.3 Volts	
Heater Current	0.6 ±5% Ampere	
Heater Warm-up Time[1]	11 Seconds	
Direct Interelectrode Capacitances (Approx.)		
Cathode to All Other Electrodes	5 μμf	
Grid No. 1 to All Other Electrodes	6 μμf	
External Conductive Coating to Anode[2]	2500 μμf	Max.
	2000 μμf	Min.

MECHANICAL DATA

Minimum Useful Screen Dimensions (Maximum Assured)	19 1/16 x 15 1/16 Inches
Minimum Useful Screen Area	262 Sq. Inches
Bulb Contact (Recessed Small Cavity Cap)	J1-21
Bulb	J171 G1 or Equivalent
Base	B7-183
Basing	8HR
Weight (approx.)	20 Pounds

RATINGS

MAXIMUM RATINGS (Absolute Maximum Values)

Anode Voltage	19,800 Volts	dc
Grid No. 4 Voltage (Focusing Electrode)	−550 to +1100 Volts	dc
Grid No. 2 Voltage	550 Volts	dc
Grid No. 1 Voltage		
Negative Bias Value	154 Volts	dc
Negative Peak Value	220 Volts	
Positive Bias Value	0 Volts	dc
Positive Peak Value	2 Volts	
Peak Heater-Cathode Voltage		
Heater Negative with Respect to Cathode During Warm-up Period not to Exceed 15 Seconds	450 Volts	
After Equipment Warm-up Period	200 Volts	
Heater Positive with Respect to Cathode	200 Volts	

TYPICAL OPERATING CONDITIONS

Anode Voltage	17,000 Volts	dc
Grid No. 4 Voltage for Focus	0 to 400 Volts	dc
Grid No. 2 Voltage	300 Volts	dc
Grid No. 1 Voltage required for Cutoff[3]	−35 to −72 Volts	dc

CIRCUIT VALUES

Grid No. 1 Circuit Resistance	1.5 Megohms Max.

QUICK REFERENCE DATA

Television Picture Tube
21" Direct Viewed
Rectangular Glass Type
Lightweight Tube
Spherical Faceplate
Gray Filter Glass
Aluminized Screen
Electrostatic Focus
110° Magnetic Deflection
1⅛" Neck Diameter
No Ion Trap
External Conductive Coating

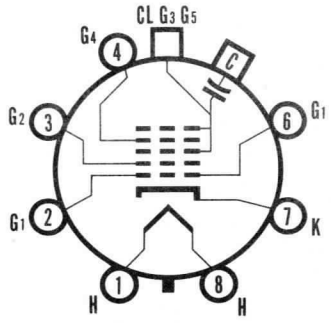

8-HR

SYLVANIA ELECTRIC PRODUCTS INC.

TELEVISION PICTURE TUBE DIVISION
SENECA FALLS, NEW YORK

Prepared and Released By The TECHNICAL PUBLICATIONS SECTION EMPORIUM, PENNSYLVANIA

DECEMBER, 1957

NOTES:

1. *Heater warm-up time is defined as the time required for the voltage across the heater to reach 80% of the rated heater voltage after applying four (4) times rated heater voltage to a circuit consisting of the tube heater in series with a resistance equal to three (3) times the rated heater voltage divided by the rated heater current.*
2. *External conductive coating must be grounded.*
3. *Visual extinction of focused raster. Extinction of stationary focused spot will require that these values be about 5 volts more negative.*

WARNING:

X-ray radiation shielding may be necessary to protect against possible danger of personal injury from prolonged exposure at close range if this tube is operated at higher that the manufacturer's Maximum Rated Anode Voltage or 16,000 volts, whichever is less.

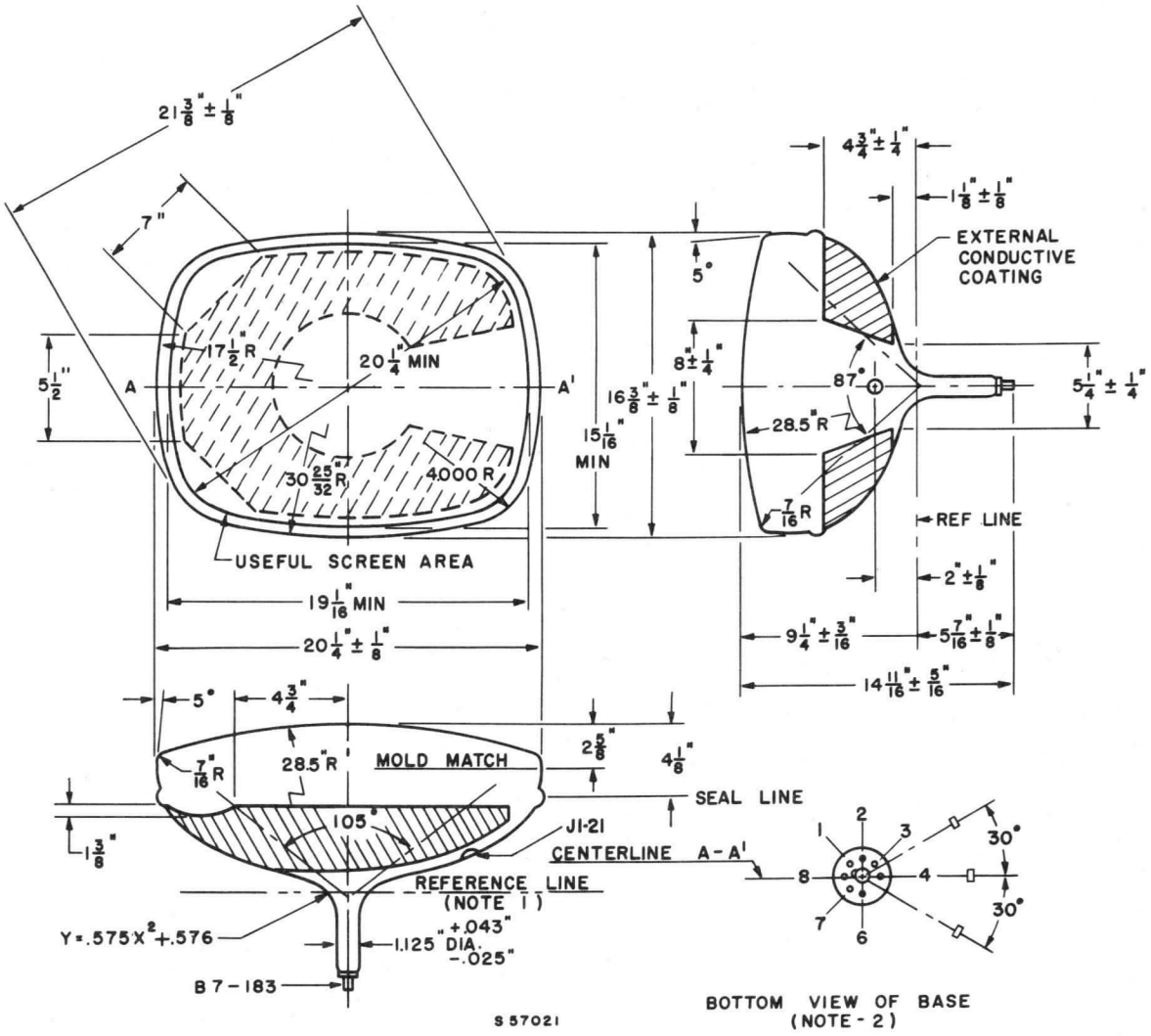

DIAGRAM NOTES:

1. *Reference line is determined by plane C-C' of (JETEC No. 126) reference line gauge when the gauge is seated against the bulb.*
2. *Base pin No. 4 aligns with horizontal centerline of tube within 30°, and is on same side of tube as anode contact (J1-21).*

A Technical Publication of

SYLVANIA ELECTRIC
PRODUCTS INC.

EMPORIUM, PA.

CHARACTERISTICS

GENERAL DATA

Focusing Method	Tri-Potential Electrostatic
Deflection Method	Magnetic
Deflection Angles (Approx.)	
Horizontal	105 Degrees
Diagonal	110 Degrees
Vertical	87 Degrees
Phosphor	Aluminized P4
Fluorescence	White
Persistence	Short to Medium
Faceplate	Gray Filter Glass
Light Transmittance (Approx.)	76 Percent

ELECTRICAL DATA

Heater Voltage	6.3 Volts
Heater Current	0.60 ± 5% Ampere
Heater Warm-up Time[1]	11 Seconds
Direct Interelectrode Capacitances (Approx.)	
Cathode to All Other Electrodes	5 $\mu\mu$f
Grid No. 1 to All Other Electrodes	6 $\mu\mu$f
External Conductive Coating to Anode[2]	2500 $\mu\mu$f Max.
	2000 $\mu\mu$f Min.

MECHANICAL DATA

Minimum Useful Screen Dimensions (Maximum Assured)	
Height	15 1/16 Inches
Width	19 1/16 Inches
Diagonal	20 1/4 Inches
Area	262 Sq. Inches
Neck Length	3 9/16 ± 1/8 Inches
Overall Length	12 13/16 ± 5/16 Inches
Bulb	J171G or J171K
Bulb Contact (Recessed Small Cavity Cap)	J1-21
Base	B7-208
Basing	8JR
Weight (Approx.)	20 Pounds

RATINGS

MAXIMUM RATINGS (Absolute Maximum Values) Grid Drive Service

Anode Voltage	22,000 Volts	dc
Grid No. 3 Voltage (Focusing Electrode)	700 Volts	dc
Grid No. 2 Voltage	600 Volts	dc
Grid No. 1 Voltage		
Negative Bias Value	154 Volts	dc
Negative Peak Value	220 Volts	
Positive Bias Value	0 Volts	dc
Positive Peak Value	2 Volts	
Peak Heater-Cathode Voltage		
Heater Negative with Respect to Cathode		
During Warm-up Period Not to Exceed 15 seconds	450 Volts	
After Equipment Warm-up Period	200 Volts	
Heater Positive with Respect to Cathode	200 Volts	

QUICK REFERENCE DATA

Television Picture Tube
21" Direct Viewed
Rectangular Glass Type
Spherical Faceplate
Gray Filter Glass
Aluminized Screen
Tri-Potential Electrostatic Focus
110° Magnetic Deflection
No Ion Trap
External Conductive Coating
Short Neck
Lightweight Tube

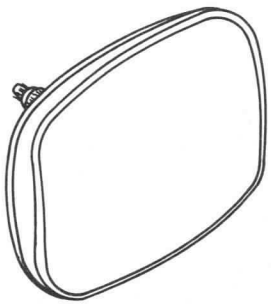

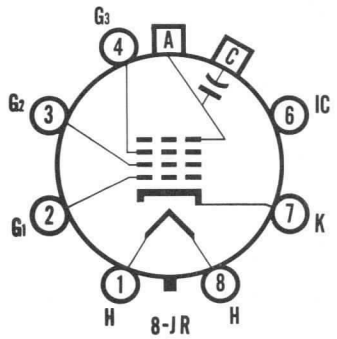

SYLVANIA
ELECTRONIC TUBES
A Division of
Sylvania Electric Products Inc.
PICTURE TUBE OPERATIONS
SENECA FALLS, NEW YORK
Prepared and Released By The
TECHNICAL PUBLICATIONS SECTION
EMPORIUM, PENNSYLVANIA
APRIL, 1960

File Under
TELEVISION PICTURE TUBES

TYPICAL OPERATING CONDITIONS (Grid Drive Service)

Anode Voltage	16,000 Volts	dc
Grid No. 3 Voltage for Focus	0 to +400 Volts	dc
Grid No. 2 Voltage[3]	500 Volts	dc
Grid No. 1 Voltage Required for Cutoff[4]	−43 to −78 Volts	dc

CIRCUIT VALUES

Grid No. 1 Circuit Resistance	1.5 Megohms Max.

NOTES:

1. *Heater warm-up time is defined as the time required for the voltage across the heater to reach 80% of the rated heater voltage after applying four (4) times rated heater voltage to a circuit consisting of the tube heater in series with a resistance equal to three (3) times the rated heater voltage divided by the rated heater current.*
2. *External conductive coating must be grounded.*
3. *Brightness and resolution improve with increase in Grid No. 2 voltage. A minimum value of 400 volts is recommended.*
4. *Visual extinction of focused raster. Extinction of stationary focused spot will require that these values be about 5 volts more negative.*

WARNING:

X-ray radiation shielding may be necessary to protect against possible danger of personal injury from prolonged exposure at close range if this tube is operated at higher than the manufacturer's Maximum Rated Anode Voltage or 16,000 volts, whichever is less.

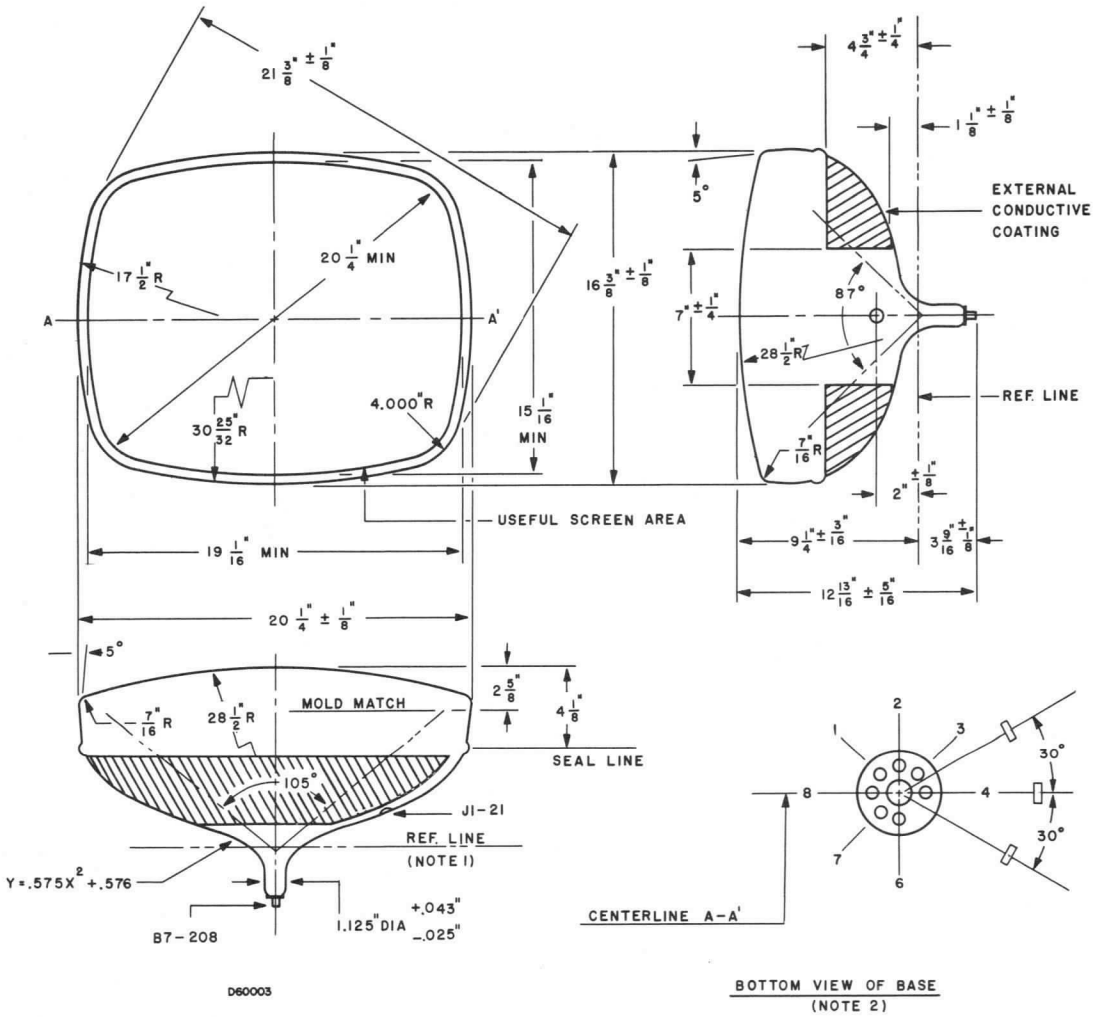

D60003

DIAGRAM NOTES:

1. *Reference line is determined by plane C-C' of JEDEC No. 126 Reference Line Gauge, when the gauge is seated against the bulb.*
2. *Base Pin No. 4 aligns with horizontal centerline (A-A') within 30° and is on same side as anode contact, J1-21.*

SYLVANIA

engineering data service

SYLVANIA
23ACP4
23TP4

CHARACTERISTICS

GENERAL DATA

Focusing Method	Electrostatic	
Deflection Method	Magnetic	
Deflection Angles (Approx.)*		
Horizontal	76	Degrees
Diagonal	87	Degrees
Vertical	62	Degrees
Phosphor	Aluminized P4	
Fluorescence	White	
Persistence	Short to Medium	
Faceplate	Bonded Shield	
(Gray Filter Glass Safety Plate Laminated Directly to Face of Tube)		
Light Transmittance of Faceplate Assembly (Approx.)	40	Percent

ELECTRICAL DATA

Heater Voltage	6.3	Volts
Heater Current	0.60 ± 5%	Ampere
Heater Warm-up Time[1]	11	Seconds
Direct Interelectrode Capacitances (Approx.)		
Cathode to All Other Electrodes	5	μμf
Grid No. 1 to All Other Electrodes	6	μμf
External Conductive Coating to Anode[2]	2500	μμf Max.
	2000	μμf Min.

MECHANICAL DATA

Minimum Useful Screen Dimensions (Maximum Assured)		
Height	15¼	Inches
Width	19 5/16	Inches
Diagonal	22 5/16	Inches
Area	282	Sq. Inches
Neck Length	5½ ± 3/16	Inches
Overall Length	19 11/32 ± 7/16	Inches
Bulb	C187 Exp. No. 2	
Safety Plate	FP198A or Equiv.	
Bulb Contact (Recessed Small Cavity Cap)	J1-21	
Base	B6-63	
Basing	12L	
Weight (Approx.)	35	Pounds

*Diagonal Deflection Angle is equal to that of earlier registered 21" tubes generally known as 90° types. Horizontal and vertical deflection angles are less.

QUICK REFERENCE DATA

Television Picture Tube
23" Direct Viewed
Rectangular Glass Type
Spherical Faceplate
Bonded Shield
Gray Filter Glass
Aluminized Screen
Electrostatic Focus
90° Magnetic Deflection
No Ion Trap
External Conductive Coating

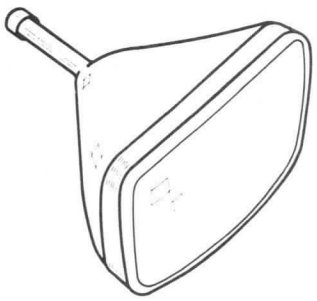

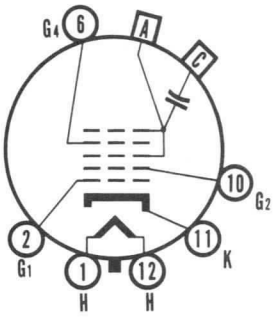

12-L

SYLVANIA
ELECTRONIC TUBES
A Division of
Sylvania Electric Products Inc.
PICTURE TUBE OPERATIONS
SENECA FALLS, NEW YORK

Prepared and Released By The
TECHNICAL PUBLICATIONS SECTION
EMPORIUM, PENNSYLVANIA
AUGUST, 1960

File Under
TELEVISION PICTURE TUBES

RATINGS

MAXIMUM RATINGS (Design Maximum Values) Grid Drive Service

	23TP4	23ACP4	
Maximum Anode Voltage	22,000	18,000 Volts	dc
Minimum Anode Voltage	12,000	8,000 Volts	dc
Grid No. 4 Voltage (Focusing Electrode)		−550 to +1100 Volts	dc
Grid No. 2 Voltage		550 Volts	dc
Grid No. 1 Voltage			
Negative Bias Value		155 Volts	dc
Negative Peak Value		220 Volts	
Positive Bias Value		0 Volts	dc
Positive Peak Value		2 Volts	
Peak Heater-Cathode Voltage			
Heater Negative with Respect to Cathode			
During Warm-up Period not to Exceed 15 Seconds		450 Volts	
After Equipment Warm-up Period		200 Volts	
Heater Positive with Respect to Cathode		200 Volts	

TYPICAL OPERATING CONDITIONS (Grid Drive Service)

Anode Voltage	16,000 Volts	dc
Grid No. 4 Voltage for Focus	0 to +400 Volts	dc
Grid No. 2 Voltage	300 Volts	dc
Grid No. 1 Voltage Required for Cutoff[3]	−35 to −72 Volts	dc

CIRCUIT VALUES

Grid No. 1 Circuit Resistance	1.5 Megohms Max.

NOTES:

1. *Heater warm-up time is defined as the time required for the voltage across the heater to reach 80% of the rated heater voltage after applying four (4) times rated heater voltage to a circuit consisting of the tube heater in series with a resistance equal to three (3) times the rated heater voltage divided by the rated heater current.*
2. *External conductive coating must be grounded.*
3. *Visual extinction of focused raster. Extinction of stationary focused spot will require that these values be about 5 volts more negative.*

WARNING:

X-ray radiation shielding may be necessary to protect against possible danger of personal injury from prolonged exposure at close range if this tube is operated at higher than the manufacturer's Maximum Rated Anode Voltage or 16,000 volts, whichever is less.

OUTLINE

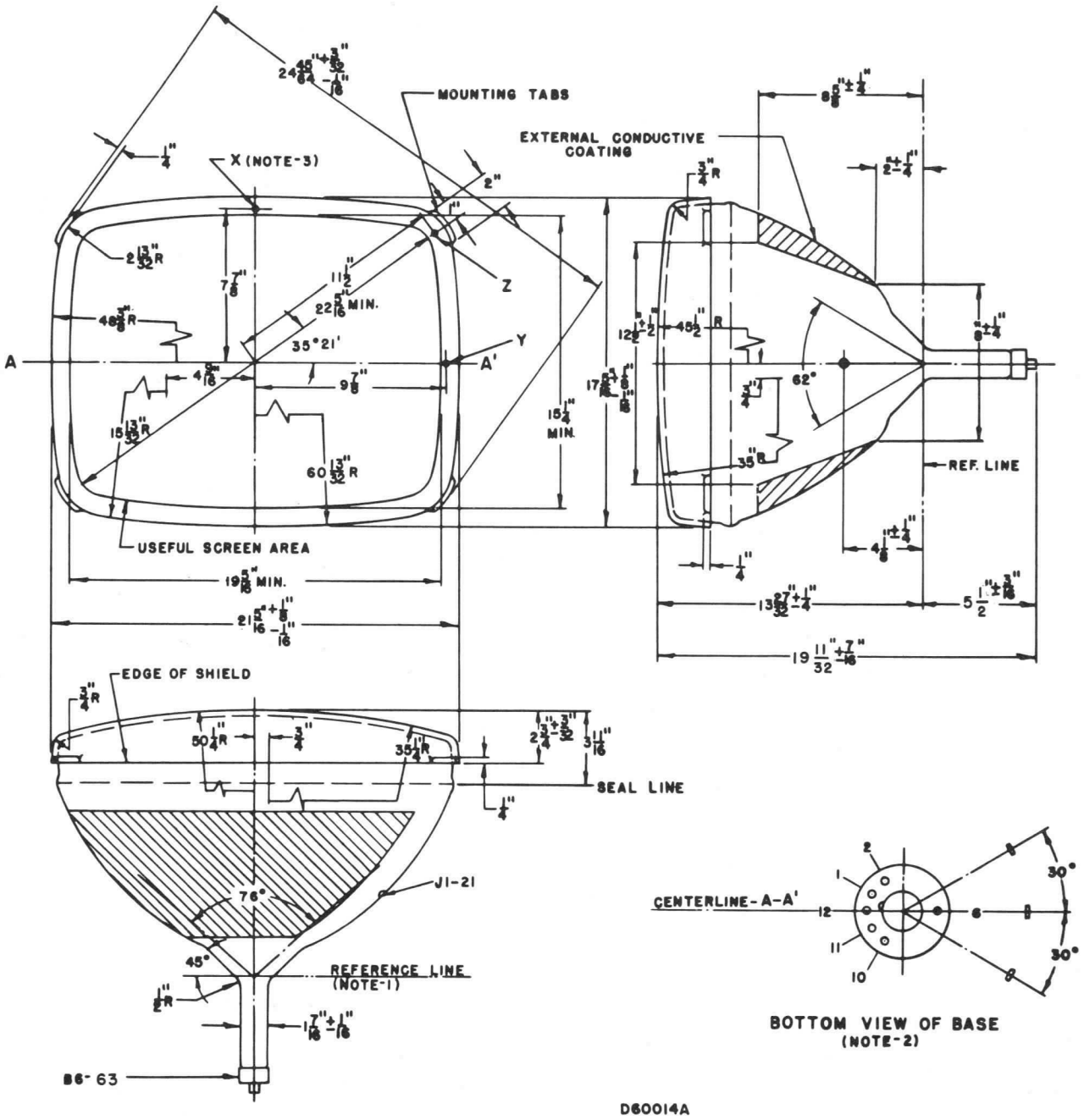

DIAGRAM NOTES:

1. *Reference line is determined by plane C-C' of JEDEC No. 116 Reference Line Gauge, when the gauge is seated against the bulb.*
2. *Base Pin No. 6 aligns with horizontal centerline (A-A') within 30° and is on same side as anode contact, J1-21.*
3. *Planes perpendicular to tube axis and passing through points X, Y and Z are located as follows:*

   Plane tangent to crown of face to plane of X: .758" Nom.

   Plane of X to plane of Y = .463" ± .030".

   Plane of X to plane of Z = .970" ± .030".

CHARACTERISTICS

GENERAL DATA

Focusing Method	Electrostatic
Deflection Method	Magnetic
Deflection Angles (Approx.)	
Horizontal	81 Degrees
Diagonal	92 Degrees
Vertical	66 Degrees
Phosphor	Aluminized P4
Fluorescence	White
Persistence	Short to Medium
Faceplate	Bonded Shield
(Gray Filter Glass Safety Plate Laminated Directly to Face of Tube)	
Light Transmittance of Faceplate Assembly (Approx.)	40 Percent

ELECTRICAL DATA

Heater Voltage	6.3 Volts	
Heater Current	0.60 ± 5% Ampere	
Heater Warm-up Time[1]	11 Seconds	
Direct Interelectrode Capacitances (Approx.)	5 $\mu\mu$f	
Cathode to All Other Electrodes	6 $\mu\mu$f	
Grid No. 1 to All Other Electrodes	2500 $\mu\mu$f	Max.
External Conductive Coating to Anode[2]	2000 $\mu\mu$f	Min.

MECHANICAL DATA

Minimum Useful Screen Dimensions (Maximum Assured)	
Height	15¼ Inches
Width	19 5/16 Inches
Diagonal	22 5/16 Inches
Area	282 Sq. Inches
Neck Length	6 ± 3/16 Inches
Overall Length	18 13/16 ± 7/16 Inches
Bulb	J187D or Equiv.
Safety Plate	FP198A or Equiv.
Bulb Contact (Recessed Small Cavity Cap)	J1-21
Base	B6-203
Basing	12L
Weight (Approx.)	34½ Pounds

QUICK REFERENCE DATA

Television Picture Tube
23" Direct Viewed
Rectangular Glass Type
Spherical Faceplate
Bonded Shield
Gray Filter Glass
Aluminized Screen
Electrostatic Focus
92° Magnetic Deflection
No Ion Trap
External Conductive Coating

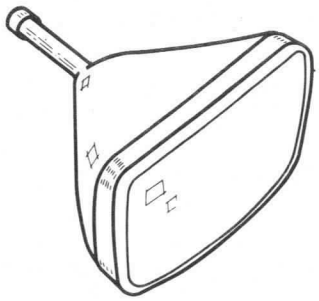

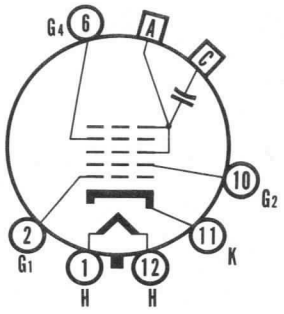

12-L

SYLVANIA
ELECTRONIC TUBES
A Division of
Sylvania Electric Products Inc.
PICTURE TUBE OPERATIONS
SENECA FALLS, NEW YORK

Prepared and Released By The
TECHNICAL PUBLICATIONS SECTION
EMPORIUM, PENNSYLVANIA

JUNE, 1961

File Under
TELEVISION PICTURE TUBES

RATINGS

MAXIMUM RATINGS (Design Maximum Values) Grid Drive Service

Anode Voltage	Max. 25,000	Volts	dc
	Min. 12,000	Volts	dc
Grid No. 4 Voltage (Focusing Electrode)	−550 to +1100	Volts	dc
Grid No. 2 Voltage	550	Volts	dc
Grid No. 1 Voltage			
Negative Bias Value	155	Volts	dc
Negative Peak Value	220	Volts	
Positive Bias Value	0	Volts	dc
Positive Peak Value	2	Volts	
Peak Heater-Cathode Voltage			
Heater Negative with Respect to Cathode			
During Warm-up Period not to Exceed 15 Seconds	450	Volts	
After Equipment Warm-up Period	200	Volts	
Heater Positive with Respect to Cathode	200	Volts	

TYPICAL OPERATING CONDITIONS (Grid Drive Service)

Anode Voltage	20,000	Volts	dc
Grid No. 4 Voltage for Focus	0 to +400	Volts	dc
Grid No. 2 Voltage	300	Volts	dc
Grid No. 1 Voltage Required for Cutoff[3]	−35 to −72	Volts	dc

CIRCUIT VALUES

Grid No. 1 Circuit Resistance	1.5	Megohms Max.

NOTES:

1. *Heater warm-up time is defined as the time required for the voltage across the heater to reach 80% of the rated heater voltage after applying four (4) times rated heater voltage to a circuit consisting of the tube heater in series with a resistance equal to three (3) times the rated heater voltage divided by the rated heater current.*
2. *External conductive coating must be grounded.*
3. *Visual extinction of focused raster. Extinction of stationary focused spot will require that these values be about 5 volts more negative.*

WARNING:

X-ray radiation shielding may be necessary to protect against possible danger of personal injury from prolonged exposure at close range if this tube is operated at higher than the manufacturer's Maximum Rated Anode Voltage or 16,000 volts, whichever is less.

OUTLINE

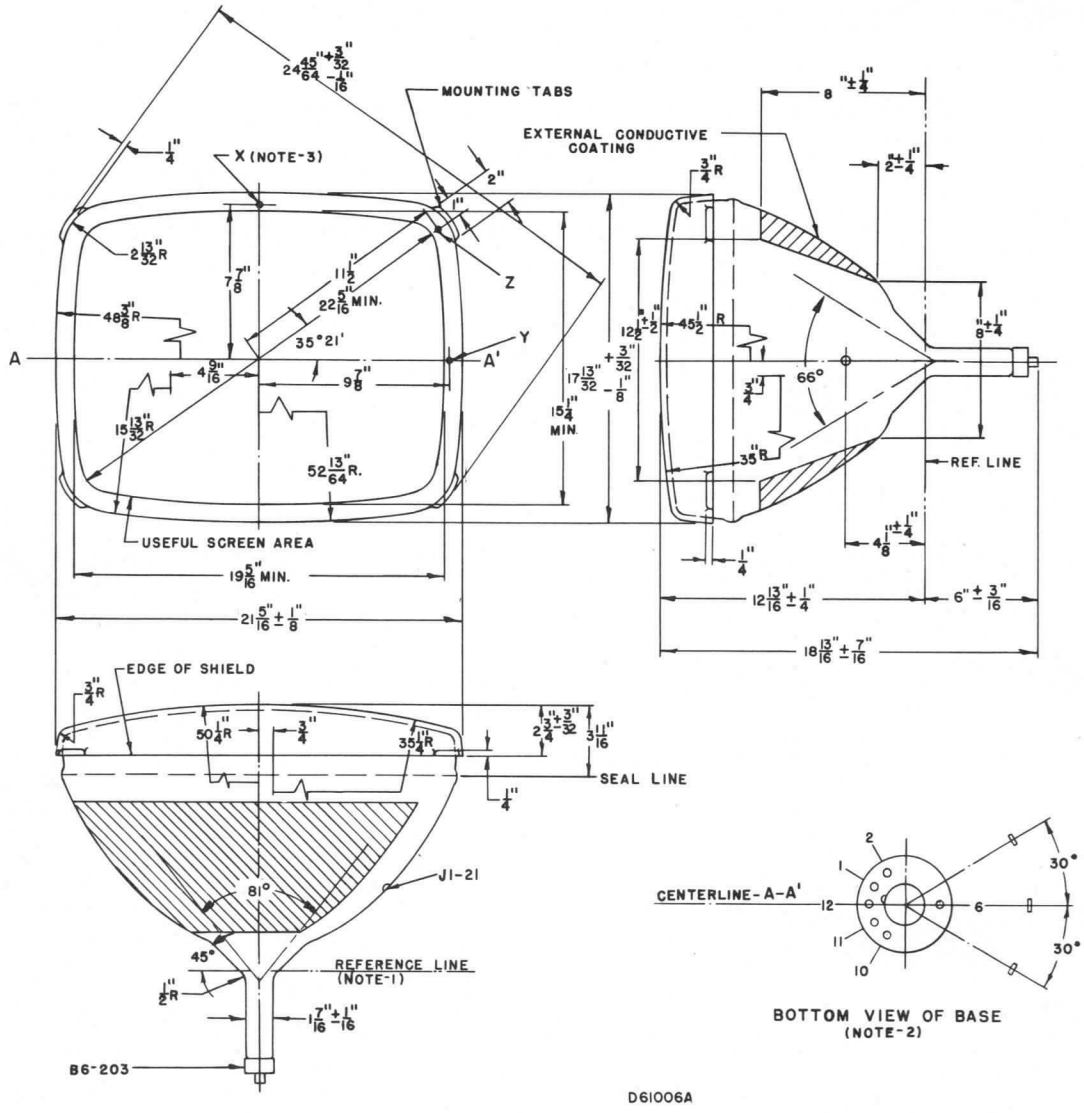

DIAGRAM NOTES:

1. *Reference line is determined by plane C-C' of JEDEC No. 116 Reference Line Gauge, when the gauge is seated against the bulb.*
2. *Base Pin No. 6 aligns with horizontal centerline (A-A') within 30° and is on same side as anode contact, J1-21.*
3. *Planes perpendicular to tube axis and passing through points X, Y and Z are located as follows:*

   Plane tangent to crown of face to plane of X: .758" Nom.

   Plane of X to plane of Y = .463" ± .030".

   Plane of X to plane of Z = .970" ± .030".

CHARACTERISTICS

GENERAL DATA

Focusing Method	Electrostatic
Deflection Method	Magnetic
Deflection Angles (Approx.)	
Horizontal	80 Degrees
Diagonal	92 Degrees
Vertical	65 Degrees
Phosphor	Aluminized P4
Fluorescence	White
Persistence	Short to Medium
Faceplate	Gray Filter Glass
Light Transmittance at Center (Approx.)	78 Percent

ELECTRICAL DATA

Heater Voltage	6.3 Volts	
Heater Current	0.60 ± 5% Ampere	
Heater Warm-up Time[1]	11 Seconds	
Direct Interelectrode Capacitances (Approx.)		
Cathode to All Other Electrodes	5 $\mu\mu$f	
Grid No. 1 to All Other Electrodes	6 $\mu\mu$f	
External Conductive Coating to Anode[2]	2500 $\mu\mu$f	Max.
	1700 $\mu\mu$f	Min.

MECHANICAL DATA

Minimum Useful Screen Dimensions (Maximum Assured)	
Height	15⅛ Inches
Width	19¼ Inches
Diagonal	22 5/16 Inches
Area	278 Sq. Inches
Neck Length	5½ ± 3/16 Inches
Overall Length	18 ± ⅜ Inches
Bulb	J187C
Bulb Contact (Recessed Small Cavity Cap)	J1-21
Base	B6-203
Basing	12L
Weight (Approx.)	27 Pounds

RATINGS

MAXIMUM RATINGS (Design Maximum Values) Grid Drive Service

Maximum Anode Voltage	22,000 Volts	dc
Minimum Anode Voltage	12,000 Volts	dc
Grid No. 4 Voltage (Focusing Electrode)	−550 to +1100 Volts	dc
Grid No. 2 Voltage	550 Volts	dc
Grid No. 1 Voltage		
Negative Bias Value	155 Volts	dc
Negative Peak Value	220 Volts	
Positive Bias Value	0 Volts	dc
Positive Peak Value	2 Volts	
Maximum Heater Voltage	6.9 Volts	
Minimum Heater Voltage	5.7 Volts	
Peak Heater-Cathode Voltage		
Heater Negative with Respect to Cathode During		
Warm-up Period not to Exceed 15 Seconds	450 Volts	
After Equipment Warm-up Period	200 Volts	
Heater Positive with Respect to Cathode	200 Volts	

QUICK REFERENCE DATA

Television Picture Tube
23" Direct Viewed
Rectangular Glass Type
Spherical Faceplate
Gray Filter Glass
Aluminized Screen
Electrostatic Focus
92° Magnetic Deflection
No Ion Trap
External Conductive Coating

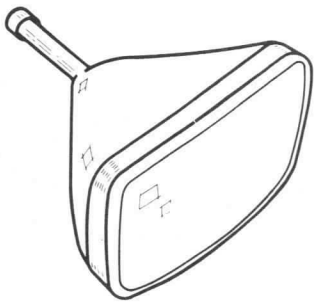

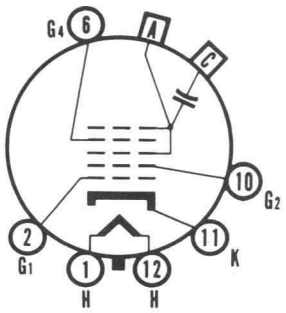

12-L

SYLVANIA
ELECTRONIC TUBES
A Division of
Sylvania Electric Products Inc.
PICTURE TUBE OPERATIONS
SENECA FALLS, NEW YORK

Prepared and Released By The
TECHNICAL PUBLICATIONS SECTION
EMPORIUM, PENNSYLVANIA

MAY, 1961

File Under
TELEVISION PICTURE TUBES

TYPICAL OPERATION CONDITIONS (Grid Drive Service)

Anode Voltage	16,000 Volts	dc
Grid No. 4 Voltage for Focus	0 to +400 Volts	dc
Grid No. 2 Voltage	300 Volts	dc
Grid No. 1 Voltage Required for Cutoff[3]	−35 to −72 Volts	dc

CIRCUIT VALUES

Grid No. 1 Circuit Resistance	1.5 Megohms Max.

NOTES:

1. *Heater warm-up time is defined as the time required for the voltage across the heater to reach 80% of the rated heater voltage after applying four (4) times rated heater voltage to a circuit consisting of the tube heater in series with a resistance equal to three (3) times the rated heater voltage divided by the rated heater current.*
2. *External conductive coating must be grounded.*
3. *Visual extinction of focused raster. Extinction of stationary focused spot will require that these values be about 5 volts more negative.*

WARNING:

X-ray radiation shielding may be necessary to protect against possible danger of personal injury from prolonged exposure at close range if this tube is operated at higher than the manufacturer's Maximum Rated Anode Voltage or 16,000 volts, whichever is less.

OUTLINE

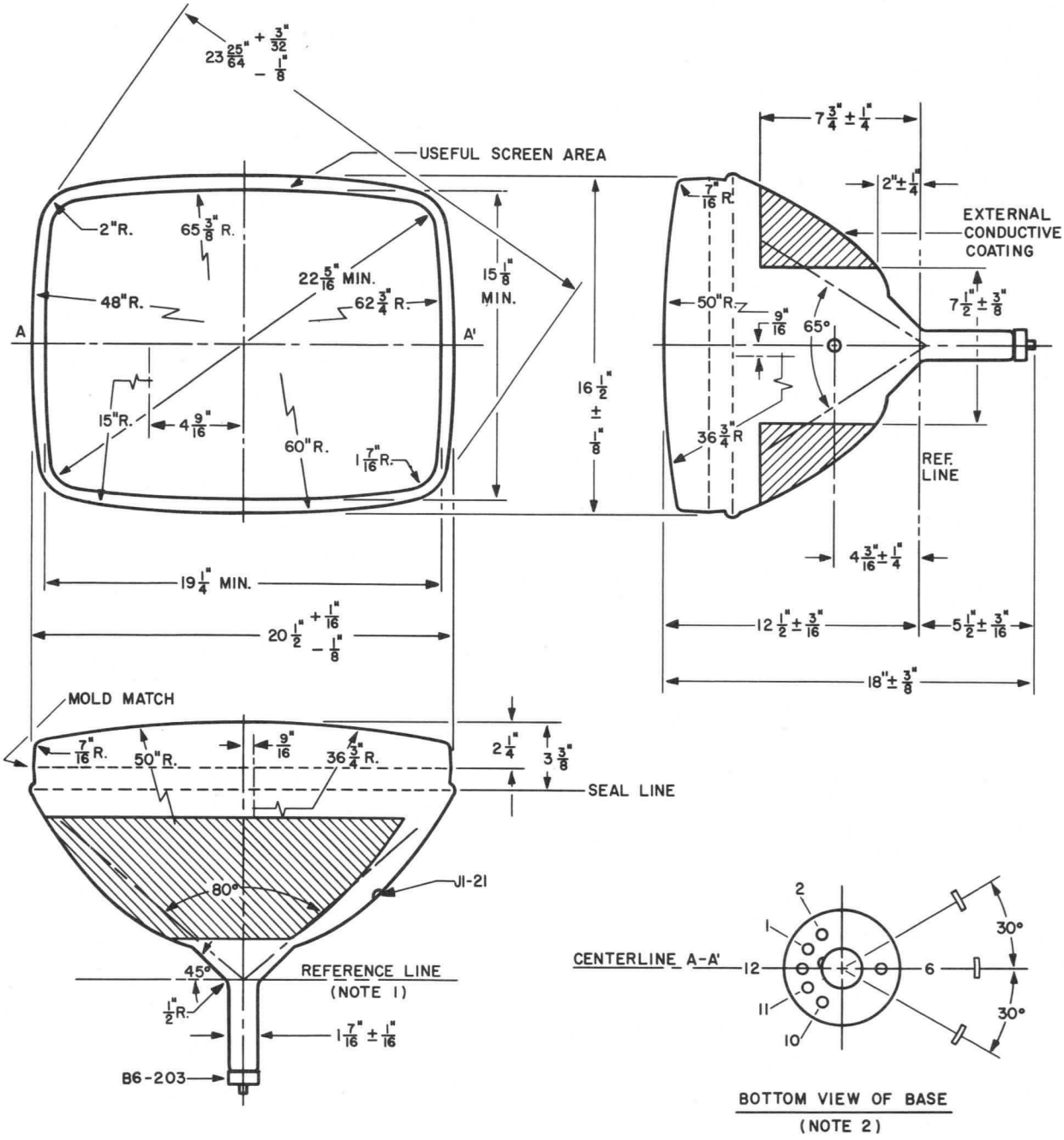

D60032A

DIAGRAM NOTES:

1. *Reference line is determined by plane C-C' of JEDEC No. 116 Reference Line Gauge, when the gauge is seated against the bulb.*
2. *Base Pin No. 6 aligns with horizontal centerline (A-A') within 30° and is on same side as anode contact, J1-21.*

SYLVANIA

engineering data service

SYLVANIA

23AKP4

CHARACTERISTICS

GENERAL DATA

Focusing Method	Tri-Potential Electrostatic	
Deflection Method	Magnetic	
Deflection Angles (Approx.)		
Horizontal	102	Degrees
Diagonal	114	Degrees
Vertical	86	Degrees
Phosphor	Aluminized P4	
Fluorescence	White	
Persistence	Short to Medium	
Faceplate	Gray Filter Glass	
Light Transmittance (Approx.)	78	Percent

ELECTRICAL DATA

Heater Voltage	6.3	Volts	
Heater Current	0.60 ± 5%	Ampere	
Heater Warm-up Time[1]	11	Seconds	
Direct Interelectrode Capacitances (Approx.)			
Cathode to All Other Electrodes	5	μμf	
Grid No. 1 to All Other Electrodes	6	μμf	
External Conductive Coating to Anode[2]	2500	μμf	Max.
	2000	μμf	Min.

MECHANICAL DATA

Minimum Useful Screen Dimensions (Maximum Assured)		
Height	15⅛	Inches
Width	19¼	Inches
Diagonal	22 5/16	Inches
Area	282	Sq. Inches
Neck Length	3 9/16 ± ⅛	Inches
Overall Length	12 13/16 ± 5/16	Inches
Bulb	J187B	
Bulb Contact (Recessed Small Cavity Cap)	J1-21	
Base	B7-208	
Basing	8JR	
Weight (Approx.)	25	Pounds

RATINGS

MAXIMUM RATINGS (Design Maximum Values) Grid Drive Service

Maximum Anode Voltage	22,000	Volts	dc
Minimum Anode Voltage	12,000	Volts	dc
Grid No. 3 Voltage (Focusing Electrode)	700	Volts	dc
Grid No. 2 Voltage	600	Volts	dc
Grid No. 1 Voltage			
Negative Bias Value	155	Volts	dc
Negative Peak Value	220	Volts	
Positive Bias Value	0	Volts	dc
Positive Peak Value	2	Volts	
Peak Heater-Cathode Voltage			
Heater Negative with Respect to Cathode			
During Warm-up Period not to Exceed 15 Seconds	450	Volts	
After Equipment Warm-up Period	200	Volts	
Heater Positive with Respect to Cathode	200	Volts	

QUICK REFERENCE DATA

Television Picture Tube
23" Direct Viewed
Rectangular Glass Type
Spherical Faceplate
Gray Filter Glass
Aluminized Screen
Tri-Potential
Electrostatic Focus
114° Magnetic Deflection
No Ion Trap
External Conductive Coating
Short Neck

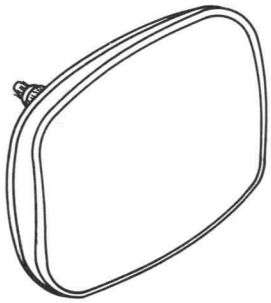

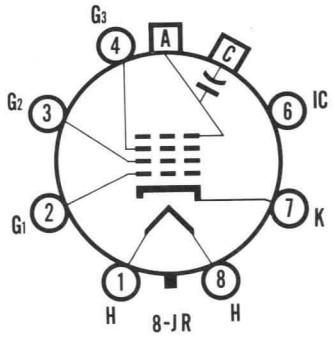

SYLVANIA
ELECTRONIC TUBES
A Division of
Sylvania Electric Products Inc.
PICTURE TUBE OPERATIONS
SENECA FALLS, NEW YORK
Prepared and Released By The
TECHNICAL PUBLICATIONS SECTION
EMPORIUM, PENNSYLVANIA
FEBRUARY, 1961

File Under
TELEVISION PICTURE TUBES

TYPICAL OPERATING CONDITIONS (Grid Drive Service)

Anode Voltage	16,000 Volts	dc
Grid No. 3 Voltage for Focus	0 to +400 Volts	dc
Grid No. 2 Voltage[3]	500 Volts	dc
Grid No. 1 Voltage Required for Cutoff[4]	–43 to –78 Volts	dc

CIRCUIT VALUES

Grid No. 1 Circuit Resistance	1.5 Megohms Max.

NOTES:

1. *Heater warm-up time is defined as the time required for the voltage across the heater to reach 80% of the rated heater voltage after applying four (4) times rated heater voltage to a circuit consisting of the tube heater in series with a resistance equal to three (3) times the rated heater voltage divided by the rated heater current.*
2. *External conductive coating must be grounded.*
3. *Brightness and resolution improve with increase in Grid No. 2 Voltage. A minimum value of 400 volts is recommended.*
4. *Visual extinction of focused raster. Extinction of stationary focused spot will require that these values be about 5 volts. more negative.*

WARNING:

X-ray radiation shielding may be necessary to protect against possible danger of personal injury from prolonged exposure at close range if this tube is operated at higher than the manufacturer's Maximum Rated Anode Voltage or 16,000 volts, whichever is less.

OUTLINE

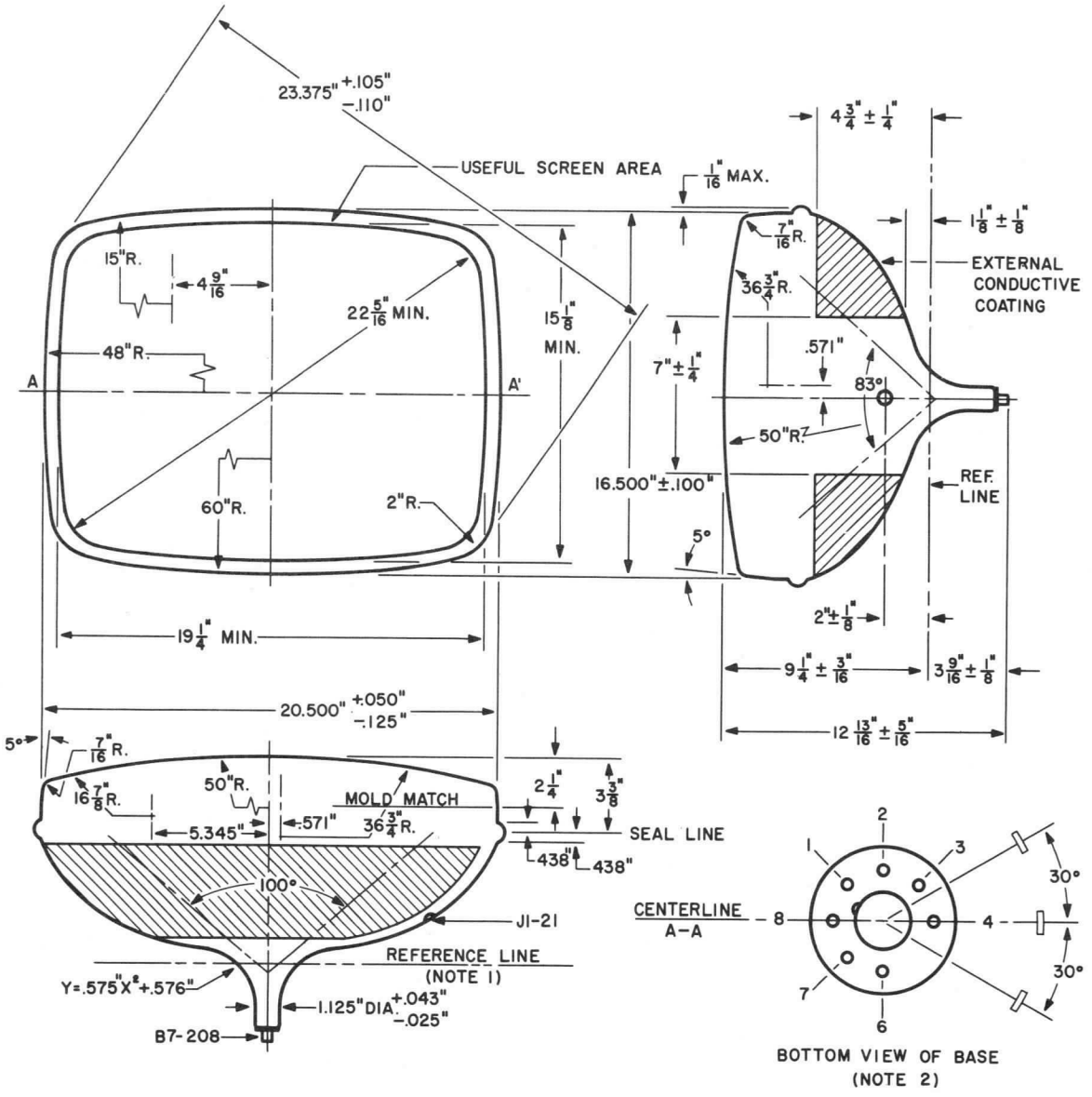

D60039

DIAGRAM NOTES:

1. *Reference line is determined by plane C-C' of JEDEC No. 126 Reference Line Gauge, when the gauge is seated against the bulb.*
2. *Base Pin No. 4 aligns with horizontal centerline (A-A') within 30° and is on same side as anode contact, J1-21.*

CHARACTERISTICS

GENERAL DATA

Focusing Method	Electrostatic
Deflection Method	Magnetic
Deflection Angles (Approx.)	
Horizontal	81 Degrees
Diagonal	92 Degrees
Vertical	66 Degrees
Phosphor	Aluminized P4
Fluorescence	White
Persistence	Short to Medium
Faceplate	Bonded Shield
(Gray Filter Glass Safety Plate Laminated Directly to Face of Tube)	
Light Transmittance of Faceplate Assembly (Approx.)	40 Percent
23ATP4: External Surface of Safety Plate Treated to Reduce Specular Reflection	

ELECTRICAL DATA

Heater Voltage	6.3 Volts	
Heater Current	0.60 ± 5 % Ampere	
Heater Warm-up Time[1]	11 Seconds	
Direct Interelectrode Capacitances (Approx.)		
Cathode to All Other Electrodes	5 μμf	
Grid No. 1 to All Other Electrodes	6 μμf	
External Conductive Coating to Anode[2]	2500 μμf	Max.
	2000 μμf	Min.

MECHANICAL DATA

Minimum Useful Screen Dimensions (Maximum Assured)	
Height	15¼ Inches
Width	19⅝ Inches
Diagonal	22⅝ Inches
Area	282 Sq. Inches
Neck Length	5⅝ ± 3/16 Inches
Overall Length	18 7/16 ± 7/16 Inches
Bulb	J187D or J187G
Safety Plate	
23ANP4	FP198A
23ATP4	FP198B
Bulb Contact (Recessed Small Cavity Cap)	J1-21
Base	B6-203
Basing	12L
Weight (Approx.)	34½ Pounds

RATINGS

MAXIMUM RATINGS (Design Maximum Values) Cathode Drive Service[3]

Maximum Anode Voltage	25,000 Volts	dc
Minimum Anode Voltage	16,000 Volts	dc
Grid No. 4 Voltage (Focusing Electrode)	−550 to +1100 Volts	dc
Maximum Grid No. 2 Voltage	70 Volts	dc
Minimum Grid No. 2 Voltage	40 Volts	dc
Cathode Voltage		
Negative Bias Value	0 Volts	dc
Negative Peak Value	2 Volts	
Positive Bias Value	100 Volts	dc
Positive Peak Value	140 Volts	
Peak Heater-Cathode Voltage		
Heater Negative with Respect to Cathode		
During Warm-up Period not to Exceed 15 Seconds	410 Volts	
After Equipment Warm-up Period	180 Volts	
Heater Positive with Respect to Cathode	180 Volts	

QUICK REFERENCE DATA

Television Picture Tube
23″ Direct Viewed
Rectangular Glass Type
Spherical Faceplate
Bonded Shield
Gray Filter Glass
Aluminized Screen
Electrostatic Focus
92° Magnetic Deflection
No Ion Trap
External Conductive Coating
Low Grid No. 2 Voltage
23ATP4: Anti-Reflection Treated

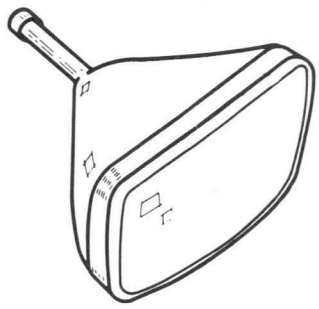

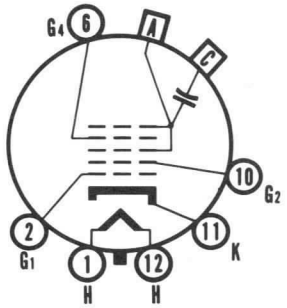

12-L

SYLVANIA
ELECTRONIC TUBES
A Division of
Sylvania Electric Products Inc.
PICTURE TUBE
OPERATIONS
SENECA FALLS, NEW YORK

Prepared and Released By The
TECHNICAL PUBLICATIONS SECTION
EMPORIUM, PENNSYLVANIA
MARCH, 1962

File Under
TELEVISION PICTURE TUBES

TYPICAL OPERATING CONDITIONS (Cathode Drive Service)[3]

Anode Voltage	20,000 Volts	dc
Grid No. 4 Voltage for Focus	0 to +500 Volts	dc
Grid No. 2 Voltage	50 Volts	dc
Grid No. 1 Voltage Required for Cutoff[4]	+36 to +54 Volts	dc

CIRCUIT VALUES

Grid No. 1 Circuit Resistance	1.5 Megohms Max.

NOTES:

1. *Heater warm-up time is defined as the time required for the voltage across the heater to reach 80 % of the rated heater voltage after applying four (4) times rated heater voltage to a circuit consisting of the tube heater in series with a resistance equal to three (3) times the rated heater voltage divided by the rated heater current.*
2. *External conductive coating must be grounded.*
3. *Unless otherwise specified, voltages are positive and measured with respect to Grid No. 1.*
4. *Visual extinction of focused raster. Extinction of stationary focused spot will require that these values be about 5 volts more positive.*

WARNING:

X-ray radiation shielding may be necessary to protect against possible danger of personal injury from prolonged exposure at close range if this tube is operated at higher than the manufacturer's Maximum Rated Anode Voltage or 16,000 volts, whichever is less.

OUTLINE

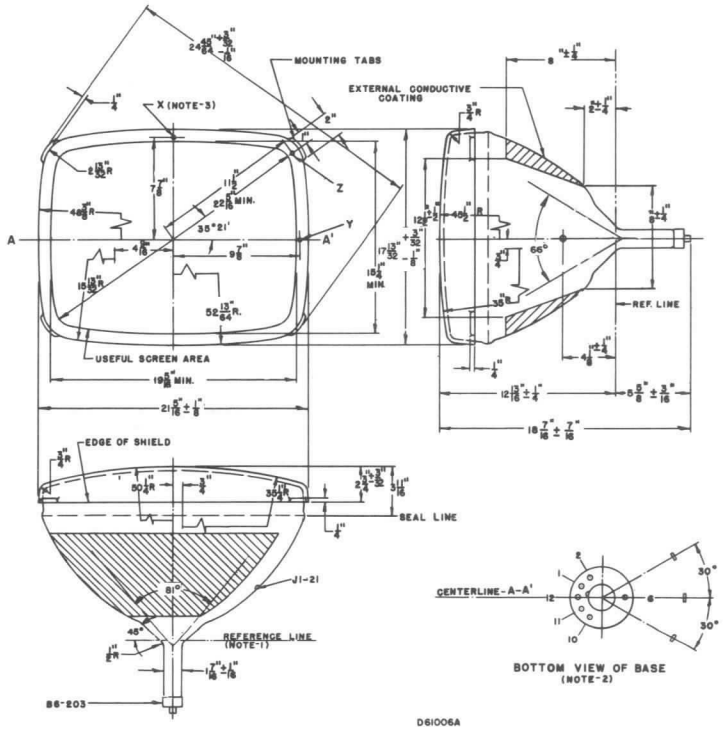

DIAGRAM NOTES:

1. *Reference line is determined by Plane C-C' of JEDEC No. 116 Reference Line Gauge, when the gauge is seated against the bulb.*
2. *Base Pin No. 6 aligns with horizontal center line (A-A') within 30° and is on same side as anode contact, J1-21.*
3. *Planes perpendicular to tube axis and passing through Points X, Y and Z are located as follows:*
   Plane tangent to crown of face to Plane of X: .758" Nom.
   Plane of X to Plane of Y = .463" ± .030".
   Plane of X to Plane of Z = .970" ± .030".

CHARACTERISTICS

GENERAL DATA

Focusing Method	Electrostatic
Deflection Method	Magnetic
Deflection Angles (Approx.)	
Horizontal	80 Degrees
Diagonal	92 Degrees
Vertical	65 Degrees
Phosphor	Aluminized P4
Fluorescence	White
Persistence	Short to Medium
Faceplate	Gray Filter Glass
Light Transmittance (Approx.)	78 Percent

ELECTRICAL DATA

Heater Voltage	6.3 Volts	
Heater Current	0.6 ± 5 % Ampere	
Heater Warm-up Time[1]	11 Seconds	
Direct Interelectrode Capacitances (Approx.)		
Cathode to All Other Electrodes	5 μμf	
Grid No. 1 to All Other Electrodes	6 μμf	
External Conductive Coating to Anode[2]	2500 μμf	Max.
	1700 μμf	Min.

MECHANICAL DATA

Minimum Useful Screen Dimensions (Maximum Assured)	19¼ x 15⅛ Inches
Minimum Useful Screen Area	282 Sq. Inches
Neck Length	4½ ± 3/16 Inches
Overall Length	17 ± ⅜ Inches
Bulb	J187C or J187F
Bulb Contact (Recessed Small Cavity Cap)	J1-21
Base	B6-203
Basing	12L
Weight	27 Lbs.

RATINGS

MAXIMUM RATINGS (Design Maximum Values)

Grid Drive Service

Maximum Anode Voltage	22,000 Volts	dc
Minimum Anode Voltage	11,000 Volts	dc
Grid No. 4 Voltage (Focusing Electrode)	−550 to +1100 Volts	dc
Maximum Grid No. 2 Voltage	550 Volts	dc
Minimum Grid No. 2 Voltage	200 Volts	dc
Grid No. 1 Voltage		
Negative Bias Value	154 Volts	dc
Negative Peak Value	220 Volts	
Positive Bias Value	0 Volts	dc
Positive Peak Value	2 Volts	
Peak Heater-Cathode Voltage		
Heater Negative with Respect to Cathode During Warm-up Period not to Exceed 15 Seconds	450 Volts	
After Equipment Warm-up Period	200 Volts	
Heater Positive with Respect to Cathode	200 Volts	

QUICK REFERENCE DATA

Television Picture Tube
23" Direct Viewed
Rectangular Glass Type
Spherical Faceplate
Gray Filter Glass
Aluminized Screen
Electrostatic Focus
92° Magnetic Deflection
1 7/16" Neck Diameter
No Ion Trap
External Conductive Coating
Short Neck

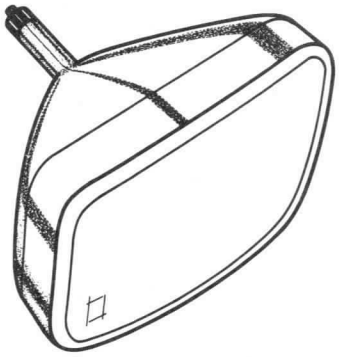

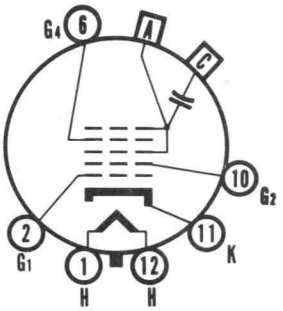

12-L

SYLVANIA
ELECTRONIC TUBES
A Division of
Sylvania Electric Products Inc.
PICTURE TUBE
OPERATIONS
SENECA FALLS, NEW YORK

Prepared and Released By The
TECHNICAL PUBLICATIONS SECTION
EMPORIUM, PENNSYLVANIA
MARCH, 1962

File Under
TELEVISION PICTURE TUBES

MAXIMUM RATINGS (DESIGN MAXIMUM VALUES) Continued

Cathode Drive Service		
Maximum Anode Voltage	22,000 Volts	dc
Minimum Anode Voltage	11,000 Volts	dc
Grid No. 4 Voltage (Focusing Electrode)	−400 to +1250 Volts	dc
Maximum Grid No. 2 Voltage	700 Volts	dc
Minimum Grid No. 2 Voltage	350 Volts	dc
Cathode Voltage		
Positive Bias Value	154 Volts	dc
Positive Peak Value	220 Volts	
Negative Bias Value	0 Volts	dc
Negative Peak Value	2 Volts	
Peak Heater-Cathode Voltage		
Heater Negative with Respect to Cathode		
During Warm-up Period not to Exceed 15 Seconds	450 Volts	
After Equipment Warm-up Period	200 Volts	
Heater Positive with Respect to Cathode	200 Volts	

TYPICAL OPERATING CONDITIONS

Grid Drive Service		
Anode Voltage	18,000 Volts	dc
Grid No. 4 Voltage for Focus	0 to 400 Volts	dc
Grid No. 2 Voltage	400 Volts	dc
Grid No. 1 Voltage Required for Cutoff[3]	−48 to −96 Volts	dc
Cathode Drive Service		
Anode Voltage	18,000 Volts	dc
Grid No. 4 Voltage for Focus	0 to 400 Volts	dc
Grid No. 2 Voltage	400 Volts	dc
Grid No. 1 Voltage	0 Volts	dc
Cathode Voltage	+46 to +80 Volts	dc

CIRCUIT VALUES

Grid No. 1 Circuit Resistance	1.5 Megohms Max.

NOTES:

1. *Heater warm-up time is defined as the time required for the voltage across the heater to reach 80 % of its rated value after applying four (4) times rated heater voltage to a circuit consisting of the tube heater in series with a resistance equal to three (3) times rated heater voltage divided by rated heater current.*
2. *External conductive coating must be grounded.*
3. *Visual extinction of focused raster. Extinction of stationary focused spot will require that these values be increased by about 5 Volts.*

WARNING:

X-ray radiation shielding may be necessary to protect against possible danger of personal injury from prolonged exposure at close range if this tube is operated at higher than the manufacturer's Maximum Rated Anode Voltage or 16,000 volts, whichever is less.

OUTLINE

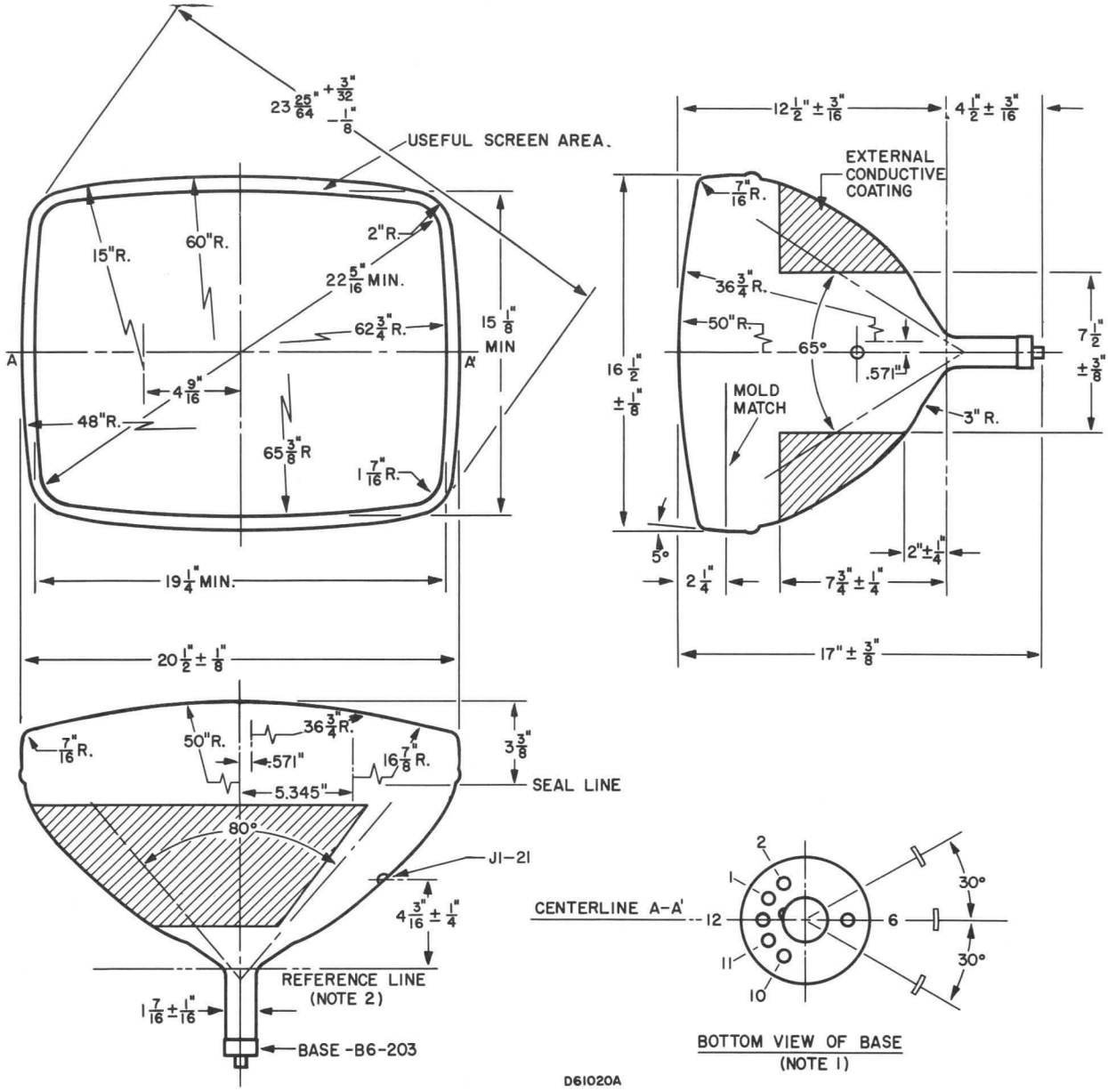

DIAGRAM NOTES:

1. *The plane through the tube axis and Pin No. 6 may vary from the plane through the tube axis and anode terminal by angular tolerance (measured about the tube axis) of ±30°. Anode terminal is on the same side as Pin No. 6.*
2. *With tube neck inserted through the flared end of the reference line gauge JEDEC No. G-116 and with the tube seated in gauge, the reference line is determined by the intersection of the Plane CC' of the gauge with the glass funnel.*

CHARACTERISTICS

GENERAL DATA

Focusing Method	Electrostatic
Deflection Method	Magnetic
Deflection Angles (Approx.)	
Horizontal	99 Degrees
Diagonal	110 Degrees
Vertical	82 Degrees
Phosphor	Aluminized P4
Fluorescence	White
Persistence	Short to Medium
Faceplate	Bonded Shield
(Gray Filter Glass Safety Plate Laminated Directly to Face of Tube)	
Light Transmittance of Faceplate Assembly (Approx)	40 Percent
23BHP4: External Surface of Safety Plate Treated to Reduce Specular Reflection	

ELECTRICAL DATA

Heater Voltage	6.3 Volts	
Heater Current	0.60 ± 5% Ampere	
Heater Warm-up Time[1]	11 Seconds	
Direct Interelectrode Capacitances (Approx.)		
Cathode to All Other Electrodes	5 μμf	
Grid No. 1 to All Other Electrodes	6 μμf	
External Conductive Coating to Anode[2]	2500 μμf	Max.
	1700 μμf	Min.

MECHANICAL DATA

Minimum Useful Screen Dimensions (Maximum Assured)	
Height	15¼ Inches
Width	19 5/16 Inches
Diagonal	22 5/16 Inches
Area	282 Sq. Inches
Neck Length	5⅛ ± ⅛ Inches
Overall Length	15 3/16 ± ⅜ Inches
Bulb	J187A or Equivalent
Safety Plate	
23BGP4	FP198A or Equivalent
23BHP4	FP198B or Equivalent
Bulb Contact (Recessed Small Cavity Cap)	J1-21
Base	B7-208
Basing	8HR
Weight (Approx.)	32½ Pounds

QUICK REFERENCE DATA

Television Picture Tube
23" Direct Viewed
Rectangular Glass Type
Spherical Faceplate
Bonded Shield
Gray Filter Glass
Aluminized Screen
Neck Length 5⅛"
Electrostatic Focus
110° Magnetic Deflection
No Ion Trap
External Conductive Coating
23BHP4: Anti Reflection Treated

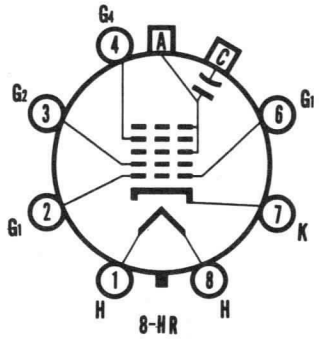

SYLVANIA
ELECTRONIC TUBES
A Division of
Sylvania Electric Products Inc.
PICTURE TUBE OPERATIONS
SENECA FALLS, NEW YORK
Prepared and Released By The
TECHNICAL PUBLICATIONS SECTION
EMPORIUM, PENNSYLVANIA
OCTOBER, 1961

File Under
TELEVISION PICTURE TUBES

RATINGS

MAXIMUM RATINGS (Design Maximum Values)

Cathode Drive Service[3]

Maximum Anode Voltage	22,000 Volts	dc
Minimum Anode Voltage	12,000 Volts	dc
Grid No. 4 Voltage (Focusing Electrode)	−550 to + 1100 Volts	dc
Grid No. 2 Voltage	70 Volts	dc
Cathode Voltage		
Positive Bias Value	155 Volts	dc
Positive Peak Value	220 Volts	
Negative Bias Value	0 Volts	dc
Negative Peak Value	2 Volts	
Peak Heater-Cathode Voltage		
Heater Negative with Respect to Cathode During Warm-up Period not to Exceed 15 Seconds	450 Volts	
After Equipment Warm-up Period	200 Volts	
Heater Positive with Respect to Cathode	200 Volts	

TYPICAL OPERATING CONDITIONS (Cathode Drive Service)[3]

Anode Voltage	16,000 Volts	dc
Grid No. 4 Voltage for Focus	0 to + 400 Volts	dc
Grid No. 2 Voltage[3]	50 Volts	dc
Cathode Voltage Required for Cutoff[4]	+32 to +47 Volts	dc

CIRCUIT VALUES

Grid No. 1 Circuit Resistance	1.5 Megohms Max.

NOTES:

1. *Heater warm-up time is defined as the time required for the voltage across the heater to reach 80% of the rated heater voltage after applying four (4) times rated heater voltage to a circuit consisting of the tube heater in series with a resistance equal to three (3) times the rated heater voltage divided by the rated heater current.*
2. *External conductive coating must be grounded.*
3. *Voltages are positive with respect to Grid No. 1 unless indicated otherwise.*
4. *Visual extinction of focused raster. Extinction of stationary focused spot will require that these values be about 5 volts more positive.*

WARNING:

X-ray radiation shielding may be necessary to protect against possible danger of personal injury from prolonged exposure at close range if this tube is operated at higher than the manufacturer's Maximum Rated Anode Voltage or 16,000 volts, whichever is less.

OUTLINE

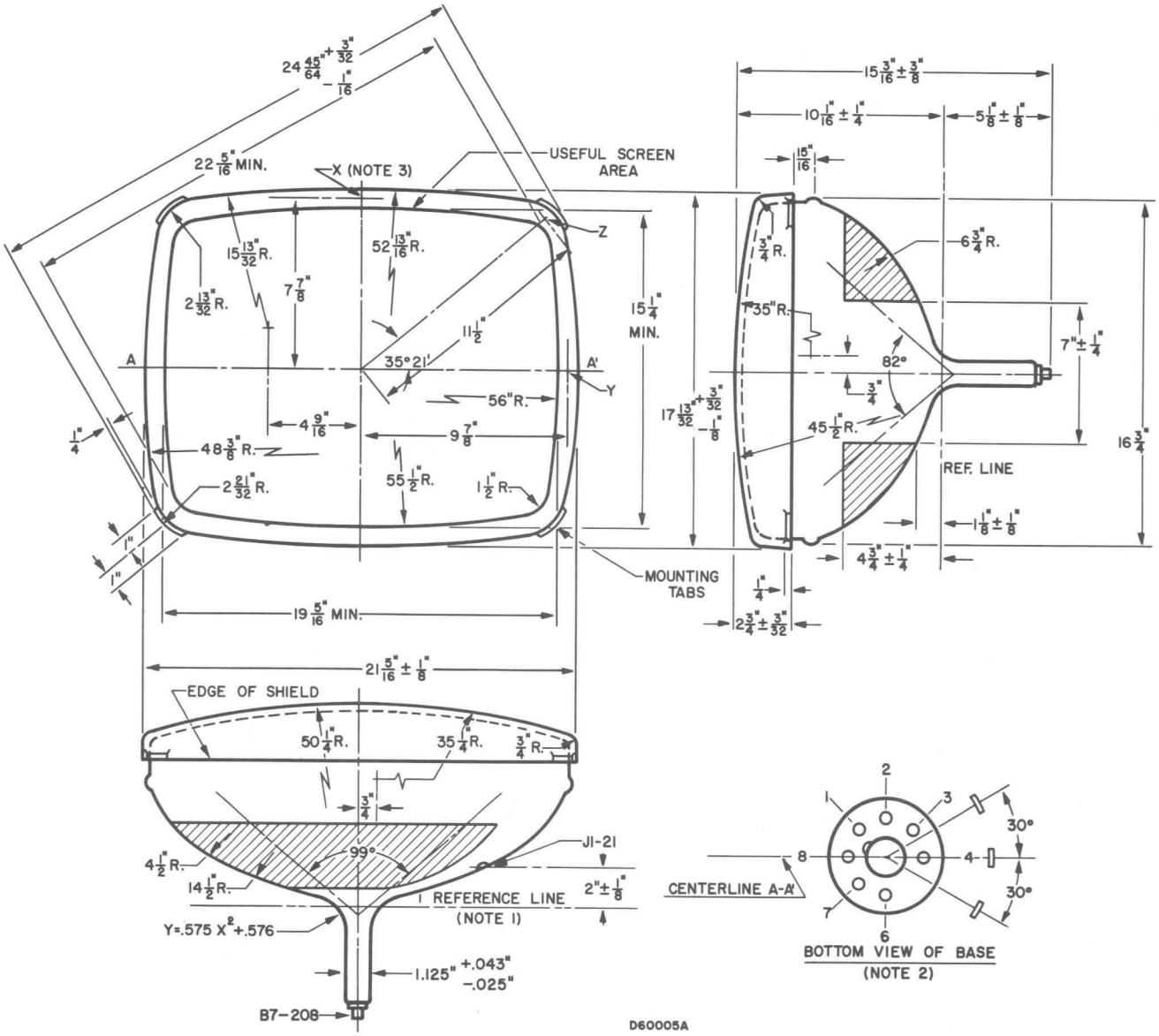

DIAGRAM NOTES:

1. *Reference line is determined by Plane C-C' of JEDEC No. 126 Reference Line Gauge, when the gauge is seated against the bulb.*
2. *Base Pin No. 4 aligns with horizontal centerline (A-A') within 30° and is on same side as anode contact, J1-21.*
3. *Planes perpendicular to the axis and passing through Points X, Y and Z are located as follows:*

   Plane tangent to crown of face, to plane of X = 0.785" Nom.

   Plane of X to plane of Y = 0.463" ± .030

   Plane of X to plane of Z = 0.970" ± .030

CHARACTERISTICS

GENERAL DATA

Focusing Method	Tri-Potential Electrostatic
Deflection Method	Magnetic
Deflection Angles (Approx.)	
Horizontal	99 Degrees
Diagonal	110 Degrees
Vertical	82 Degrees
Phosphor	Aluminized P4
Fluorescence	White
Persistence	Short to Medium
Faceplate	Bonded Shield
(Gray Filter Glass Safety Plate Laminated Directly to Face of Tube)	
Light Transmittance of Faceplate Assembly (Approx.)	40 Percent

23BRP4: External surface of safety plate treated to reduce specular reflection.

ELECTRICAL DATA

Heater Voltage	6.3 Volts	
Heater Current	0.30 ± 5 % Ampere	
Heater Warm-up Time[1]	11 Seconds	
Direct Interelectrode Capacitances (Approx.)		
Cathode to All Other Electrodes	5 μμf	
Grid No. 1 to All Other Electrodes	6 μμf	
External Conductive Coating to Anode[2]	2500 μμf	Max.
	2000 μμf	Min.

MECHANICAL DATA

Minimum Useful Screen Dimensions (Maximum Assured)	
Height	15 ¼ Inches
Width	19 5/16 Inches
Diagonal	22 5/16 Inches
Area	282 Sq. Inches
Neck Length	3 9/16 ± ⅛ Inches
Overall Length	13 5/8 ± ⅜ Inches
Bulb	J187A
Safety Plate (23RP4)	FP198A
Safety Plate (23BRP4)	FP198B
Bulb Contact (Recessed Small Cavity Cap)	J1-21
Base	B7-208
Basing	8JR
Weight (Approx.)	32 ½ Pounds

RATINGS

MAXIMUM RATINGS (Design Maximum Values) Grid Drive Service

Anode Voltage	22,000 Volts	dc
Grid No. 3 Voltage (Focusing Electrode)	700 Volts	dc
Grid No. 2 Voltage	600 Volts	dc
Grid No. 1 Voltage		
Negative Bias Value	155 Volts	dc
Negative Peak Value	220 Volts	
Positive Bias Value	0 Volts	dc
Positive Peak Value	2 Volts	
Peak Heater-Cathode Voltage		
Heater Negative with Respect to Cathode		
During Warm-up Period not to Exceed 15 Seconds	450 Volts	
After Equipment Warm-up Period	200 Volts	
Heater Positive with Respect to Cathode	200 Volts	

QUICK REFERENCE DATA

Television Picture Tubes
23″ Direct Viewed
Rectangular Glass Type
Spherical Faceplate
Bonded Shield
Gray Filter Glass
Aluminized Screen
Tri-Potential Electrostatic Focus
110° Magnetic Deflection
No Ion Trap
External Conductive Coating
Short Neck
6.3 Volt, 300 Ma Heater
23BRP4: Anti-Reflection Treated

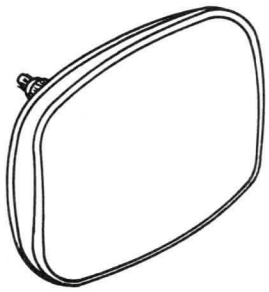

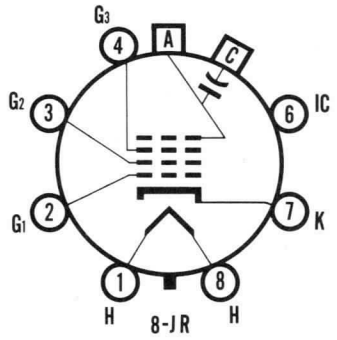

SYLVANIA
ELECTRONIC TUBES

A Division of
Sylvania Electric Products Inc.

PICTURE TUBE
OPERATIONS

SENECA FALLS, NEW YORK

Prepared and Released By The
TECHNICAL PUBLICATIONS SECTION
EMPORIUM, PENNSYLVANIA

JUNE, 1962

File Under
TELEVISION PICTURE TUBES

TYPICAL OPERATING CONDITIONS (Grid Drive Service)

Anode Voltage	16,000 Volts	dc
Grid No. 3 Voltage for Focus	0 to +400 Volts	dc
Grid No. 2 Voltage[3]	500 Volts	dc
Grid No. 1 Voltage Required for Cutoff[4]	−43 to −78 Volts	dc

CIRCUIT VALUES

Grid No. 1 Circuit Resistance	1.5 Megohms Max.

NOTES:

1. *Heater warm-up time is defined as the time required for the voltage across the heater to reach 80 % of the rated heater voltage after applying four (4) times rated heater voltage to a circuit consisting of the tube heater in series with a resistance equal to three (3) times the rated heater voltage divided by the rated heater current.*
2. *External conductive coating must be grounded.*
3. *Brightness and resolution improve with increase in Grid No. 2 Voltage. A minimum value of 400 volts is recommended.*
4. *Visual extinction of focused raster. Extinction of stationary focused spot will require that these values be about 5 volts more negative.*

WARNING:

X-ray radiation shielding may be necessary to protect against possible danger of personal injury from prolonged exposure at close range if this tube is operated at higher than the manufacturer's Maximum Rated Anode Voltage or 16,000 volts, whichever is less.

OUTLINE

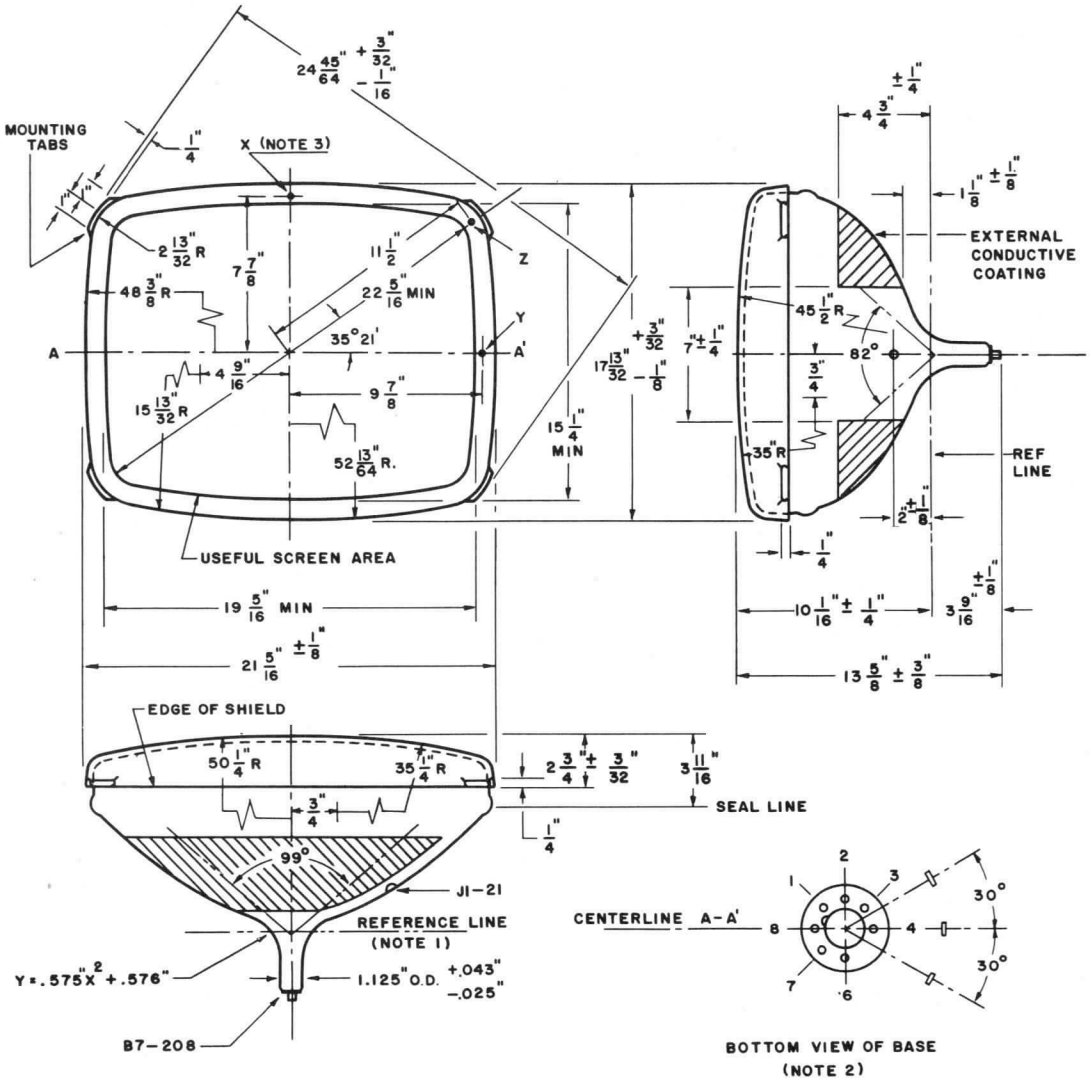

D59024A

DIAGRAM NOTES:

1. *Reference line is determined by plane C-C' of JEDEC No. 126 Reference Line Gauge, when the gauge is seated against the bulb.*
2. *Base Pin No. 4 aligns with horizontal centerline (A-A') within 30° and is on same side as anode contact, J1-12.*
3. *Planes perpendicular to the tube axis and passing through points X, Y and Z are located as follows:*
   Plane Tangent to crown of face, to plane of X = 0.758" Nom.
   Plane of X to plane of Y = 0.463" ± .030".
   Plane of X to plane of Z = 0.970" ± .030".

SYLVANIA

engineering data service

SYLVANIA
23CP4 23SP4
23AYP4 23AVP4

CHARACTERISTICS

GENERAL DATA

Focusing Method	Electrostatic
Deflection Method	Magnetic
Deflection Angles (Approx.)	
Horizontal	99 Degrees
Diagonal	110 Degrees
Vertical	82 Degrees
Phosphor	Aluminized P4
Fluorescence	White
Persistence	Short to Medium
Faceplate	Bonded Shield
(Gray Filter Glass Safety Plate Laminated Directly to Face of Tube)	
Light Transmittance of Face plate Assembly (Approx.)	40 Percent
23 AVP4 and 23AYP4: External Surface of Safety Plate Treated to Reduce Specular Reflection	

ELECTRICAL DATA

	23AYP4 23SP4	23CP4 23AVP4	
Heater Voltage	6.3	6.3	Volts
Heater Current ± 5%	0.30	0.60	Ampere
Heater Warm-up Time[1]		11	Seconds
Direct Interelectrode Capacitances (Approx.)			
Cathode to All Other Electrodes		5	μμf
Grid No. 1 to All Other Electrodes		6	μμf
External Conductive Coating to Anode[2]		2500	μμf Max.
		2000	μμf Min.

MECHANICAL DATA

Minimum Useful Screen Dimensions (Maximum Assured)	
Height	15¼ Inches
Width	19 5/16 Inches
Diagonal	22 5/16 Inches
Area	282 Sq. Inches
Neck Length	5⅛ ± ⅛ Inches
Overall Length	15 3/16 ± ⅜ Inches
Bulb	J187A or Equiv.
Safety Plate (23CP4, 23SP4)	FP198A
Safety Plate (23AVP4, 23AYP4)	FP198B
Bulb Contact (Recessed Small Cavity Cap)	J1-21
Base	B7-208
Basing	8HR
Weight (Approx.)	32½ Pounds

RATINGS

MAXIMUM RATINGS (Design Maximum Values) Grid Drive Service

Anode Voltage	22,000 Volts	dc
Grid No. 4 Voltage (Focusing Electrode)	−550 to +1100 Volts	dc
Grid No. 2 Voltage	550 Volts	dc
Grid No. 1 Voltage		
Negative Bias Value	155 Volts	dc
Negative Peak Value	220 Volts	
Positive Bias Value	0 Volts	dc
Positive Peak Value	2 Volts	

QUICK REFERENCE DATA

Television Picture Tube
23″ Direct Viewed
Rectangular Glass Type
Spherical Faceplate
Bonded Shield
Gray Filter Glass
Aluminized Screen
Electrostatic Focus
110° Magnetic Deflection
No Ion Trap
External Conductive Coating
23 AVP4 & 23AYP4: Anti Reflection Treated
23SP4 & 23AYP4: 6.3 V, 300 Ma Heaters

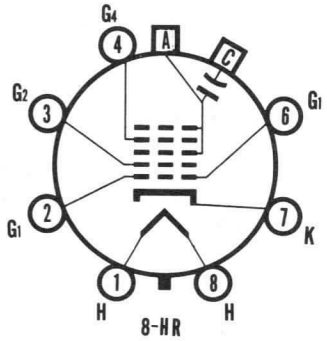

SYLVANIA ELECTRONIC TUBES

A Division of
Sylvania Electric Products Inc.

PICTURE TUBE OPERATIONS
SENECA FALLS, NEW YORK

Prepared and Released By The TECHNICAL PUBLICATIONS SECTION EMPORIUM, PENNSYLVANIA

MAY, 1961

File Under
TELEVISION PICTURE TUBES

MAXIMUM RATINGS (Design Maximum Values) Grid Drive Service (Continued)

Peak Heater-Cathode Voltage	
Heater Negative with Respect to Cathode	
During Warm-up Period not to Exceed 15 Seconds	450 Volts
After Equipment Warm-up Period	200 Volts
Heater Positive with Respect to Cathode	200 Volts

TYPICAL OPERATING CONDITIONS (Grid Drive Service)

Anode Voltage	16,000 Volts	dc
Grid No. 4 Voltage for Focus	0 to +400 Volts	dc
Grid No. 2 Voltage	300 Volts	dc
Grid No. 1 Voltage Required for Cutoff[3]	−35 to −72 Volts	dc

CIRCUIT VALUES

Grid No. 1 Circuit Resistance	1.5 Megohms Max.

NOTES:

1. *Heater warm-up time is defined as the time required for the voltage across the heater to reach 80% of the rated heater voltage after applying four (4) times rated heater voltage to a circuit consisting of the tube heater in series with a resistance equal to three (3) times the rated heater voltage divided by the rated heater current.*
2. *External conductive coating must be grounded.*
3. *Visual extinction of focused raster. Extinction of stationary focused spot will require that these values be about 5 volts more negative.*

WARNING:

X-ray radiation shielding may be necessary to protect against possible danger of personal injury from prolonged exposure at close range if this tube is operated at higher than the manufacturer's Maximum Rated Anode Voltage or 16,000 volts, whichever is less.

OUTLINE

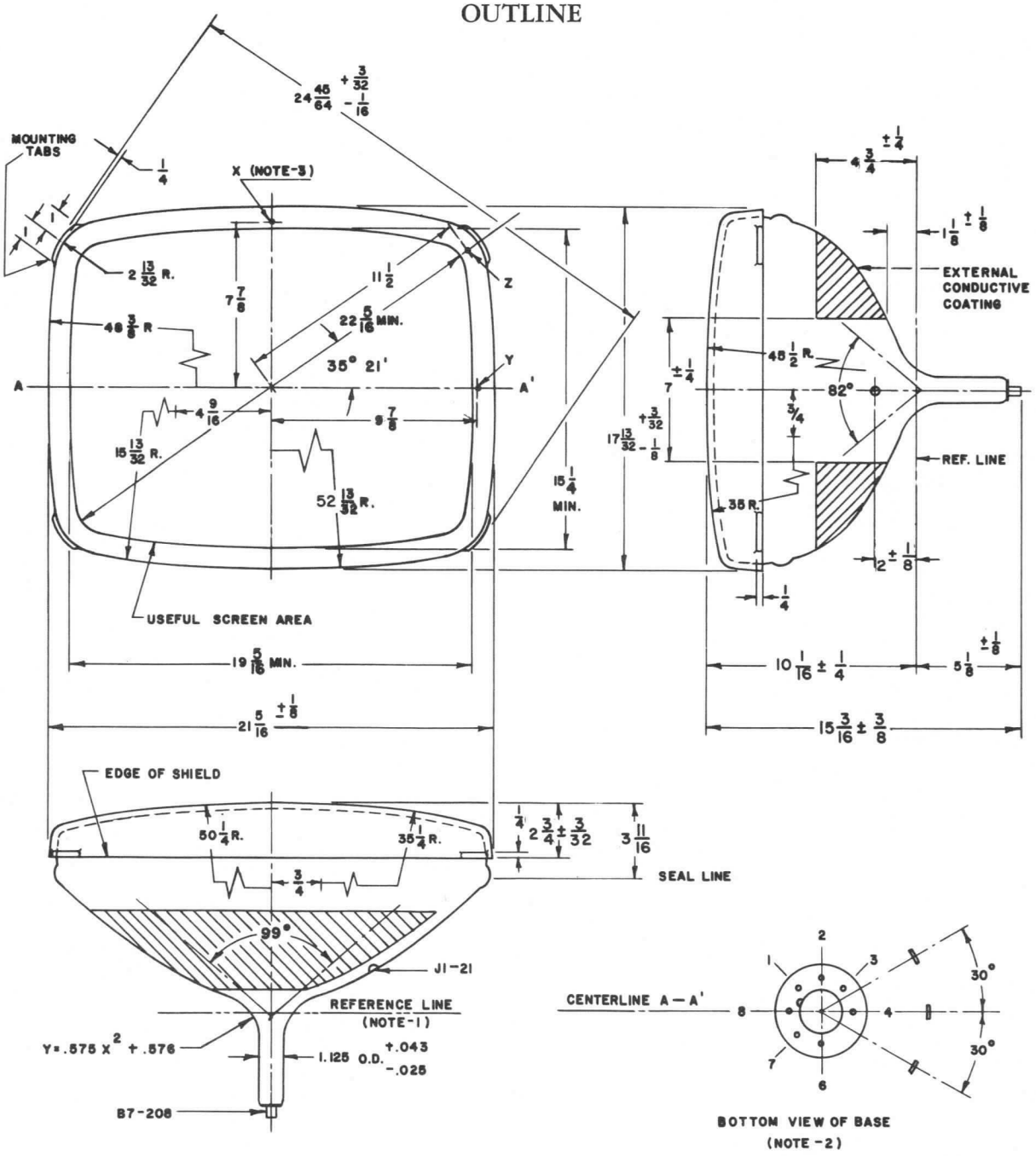

D59028A

DIAGRAM NOTES:

1. *Reference line is determined by plane C-C' of JEDEC No. 126 Reference Line Gauge, when the gauge is seated against the bulb.*
2. *Base Pin No. 4 aligns with horizontal centerline (A-A') within 30° and is on same side as anode contact, J1-21.*
3. *Planes perpendicular to tube axis and passing through X, Y, and Z are located as follows:*
   Plane tangent to crown of face to plane of X: .758" Nom.
   Plane of X to plane of Y = .463" ± 030"
   Plane of X to plane of Z = .970" ± .030"
4. *Dimensions are in inches.*

CHARACTERISTICS

GENERAL DATA

Focusing Method	Electrostatic
Deflection Method	Magnetic
Deflection Angles (Approx.)	
Horizontal	81 Degrees
Diagonal	92 Degrees
Vertical	66 Degrees
Phosphor	Aluminized P4
Fluorescence	White
Persistence	Medium Short
Faceplate	Bonded Shield
(Gray Filter Glass Safety Plate Laminated Directly to Face of Tube)	
Light Transmittance of Faceplate Assembly (Approx.)	40 Percent

23EAP4 has external surface of safety plate treated to reduce specular reflection.

ELECTRICAL DATA

Heater Voltage	6.3 Volts	
Heater Current	0.45 ± 5 % Ampere	
Heater Warm-up Time[1]	11 Seconds	
Direct Interelectrode Capacitances (Approx.)		
Cathode to All Other Electrodes	5 pf	
Grid No. 1 to All Other Electrodes	6 pf	
External Conductive Coating to Anode[2]	2500 pf	Max.
	2000 pf	Min.

MECHANICAL DATA

Minimum Useful Screen Dimensions (Maximum Assured)	
Height	15 ¼ Inches
Width	19 5/16 Inches
Diagonal	22 5/16 Inches
Area	282 Sq. Inches
Neck Length	5 ½ ± 3/16 Inches
Overall Length	18 5/16 ± 7/16 Inches
Bulb	J187D or J187G
Safety Plate	
23CTP4	FP 198A
23EAP4	FP 198B
Bulb Contact (Recessed Small Cavity Cap)	J1-21
Base	B6-203
Basing	12L
Weight (Approx.)	34 ½ Pounds

RATINGS

MAXIMUM RATINGS (Design Maximum Values)

	Grid Drive Service[3]	
Anode Voltage	22,000 Volts dc	Max.
	12,000 Volts dc	Min.
Grid No. 4 Voltage (Focusing Electrode)	−550 to +1100 Volts dc	
Grid No. 2 Voltage	550 Volts dc	
Grid No. 1 Voltage		
Negative Bias Value	155 Volts dc	
Negative Peak Value	220 Volts	
Positive Bias Value	0 Volts dc	
Positive Peak Value	2 Volts	
Peak Heater-Cathode Voltage		
Heater Negative with Respect to Cathode		
During Warm-up Period Not to Exceed 15 Secs.	450 Volts	
After Equipment Warm-up Period	200 Volts	
Heater Positive with Respect to Cathode	200 Volts	

QUICK REFERENCE DATA

Television Picture Tubes
23″ Direct Viewed
Rectangular Glass Types
Bonded Shield
Gray Filter Glass
Aluminized Screen
Electrostatic Focus
92° Magnetic Deflection
No Ion Trap
External Conductive Coating
6.3 Volt, 450 Ma Heater
23EAP4: Anti-Reflection Treated

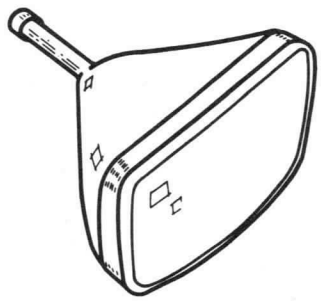

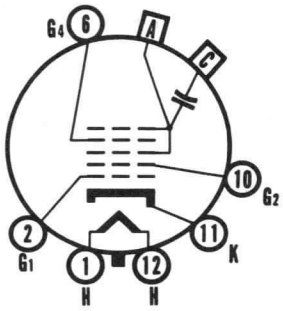

12-L

SYLVANIA
ELECTRONIC TUBES
A Division of
Sylvania Electric Products Inc.
PICTURE TUBE
OPERATIONS
SENECA FALLS, NEW YORK

Prepared and Released By The
TECHNICAL PUBLICATIONS SECTION
EMPORIUM, PENNSYLVANIA
JULY, 1963

File Under
TELEVISION PICTURE TUBES

TYPICAL OPERATING CONDITIONS

	Cathode Drive Service[4]	Grid Drive Service[3]
Anode Voltage	16,000	16,000 Volts dc
Grid No. 4 Voltage for Focus	0 to +400	0 to +400 Volts dc
Grid No. 2 Voltage	300	300 Volts dc
Grid No. 1 Voltage Required for Cutoff[5]	—	−35 to −72 Volts dc
Cathode Voltage Required for Cutoff[5]	+33 to +59	— Volts dc

CIRCUIT VALUES

Grid No. 1 Circuit Resistance	1.5 Megohms Max.

NOTES:

1. *Heater warm-up time is defined as the time required for the voltage across the heater to reach 80 % of the rated heater voltage after applying four (4) times rated heater voltage to a circuit consisting of the tube heater in series with a resistance equal to three (3) times the rated heater voltage divided by the rated heater current.*
2. *External conductive coating must be grounded.*
3. *Voltages are positive with respect to cathode unless otherwise indicated.*
4. *Voltages shown are positive with respect to Grid No. 1.*
5. *Visual extinction of focused raster. Extinction of stationary focused spot will require that the absolute value of the bias between cathode and Grid No. 1 be increased by about 5 volts.*

WARNING:

X-ray radiation shielding may be necessary to protect against possible danger of personal injury from prolonged exposure at close range if this tube is operated at higher than the manufacturer's Maximum Rated Anode Voltage or 16,000 volts, whichever is less.

OUTLINE

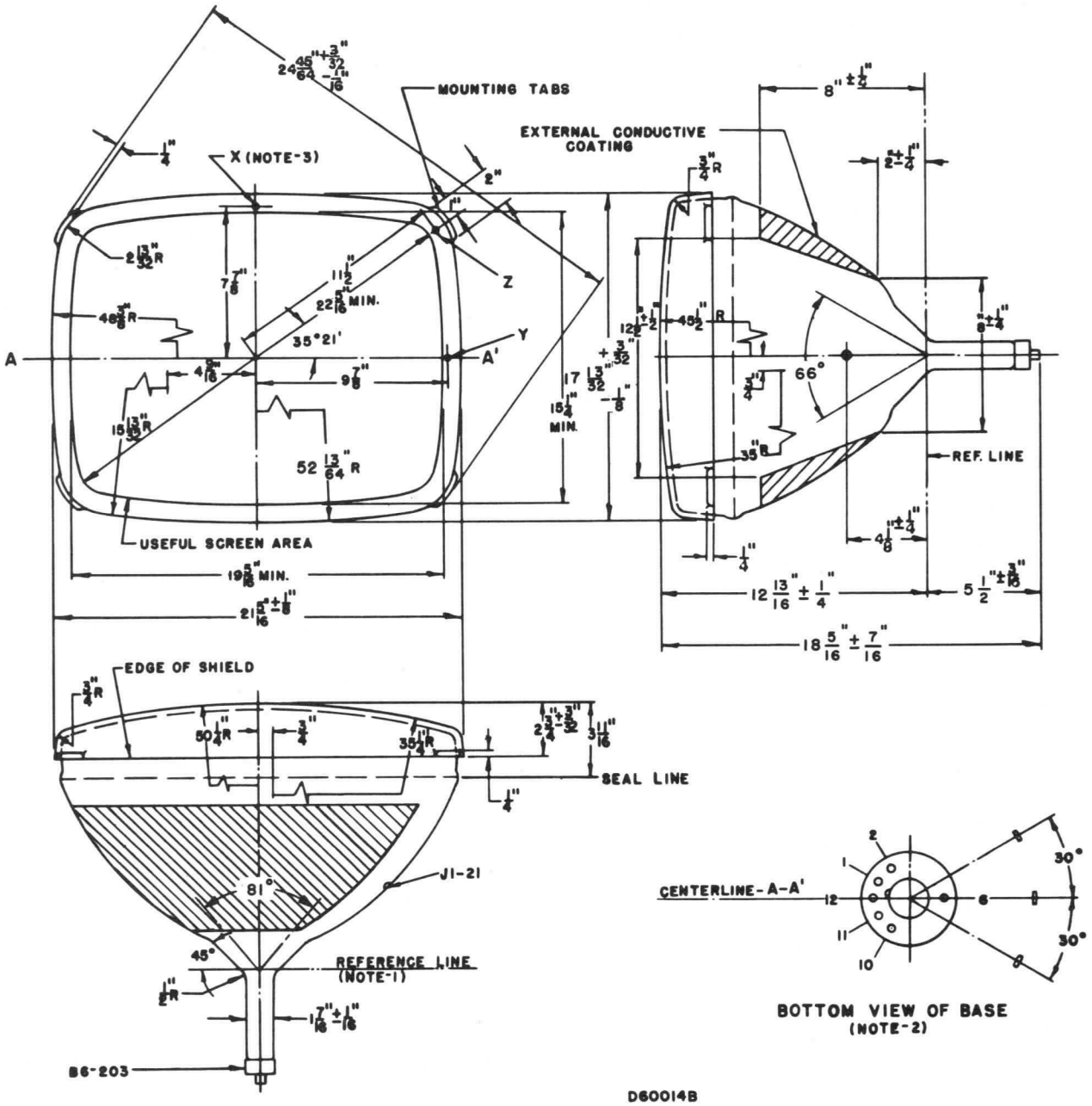

DIAGRAM NOTES:

1. *Reference line is determined by plane C-C' of JEDEC No. 116 Reference Line Gauge, when the gauge is seated against the bulb.*
2. *Base Pin No. 6 aligns with horizontal centerline (A-A') within 30° and is on same side as anode contact, J1-21.*
3. *Planes perpendicular to tube axis and passing through points X, Y and Z are located as follows:*
   Plane tangent to crown of face to plane of X: .758" Nom.
   Plane of X to plane of Y = .463" ± .030".
   Plane of X to plane of Z = .970" ± .030".

CHARACTERISTICS

GENERAL DATA

Focusing Method	Electrostatic
Deflection Method	Magnetic
Deflection Angles (Approx.)	
Horizontal	80 Degrees
Diagonal	92 Degrees
Vertical	65 Degrees
Phosphor	Aluminized P4
Fluorescence	White
Persistence	Short to Medium
Faceplate	Gray Filter Glass
Light Transmittance at Center (Approx.)	78 Percent

ELECTRICAL DATA

Heater Voltage	6.3 Volts	
Heater Current	0.60 ± 5 % Ampere	
Heater Warm-up Time[1]	11 Seconds	
Direct Interelectrode Capacitances (Approx.)		
Cathode to All Other Electrodes	5 μμf	
Grid No. 1 to All Other Electrodes	6 μμf	
External Conductive Coating to Anode[2]	2500 μμf	Max.
	2000 μμf	Min.

MECHANICAL DATA

Minimum Useful Screen Dimensions (Maximum Assured)	
Height	15 1/8 Inches
Width	19 1/4 Inches
Diagonal	22 5/16 Inches
Area	282 Sq. Inches
Neck Length	6 ± 3/16 Inches
Overall Length	18 1/2 ± 3/8 Inches
Bulb	J187C or J187F
Bulb Contact (Recessed Small Cavity Cap)	J1-21
Base	B6-203
Basing	12L
Weight (Approx.)	27 Pounds

RATINGS

MAXIMUM RATINGS (Design Maximum Values)

Grid Drive Service[3]		
Maximum Anode Voltage	25,000 Volts	dc
Minimum Anode Voltage	12,000 Volts	dc
Grid No. 4 (Focusing Electrode) Voltage	−550 to +1100 Volts	dc
Grid No. 2 Voltage	550 Volts	dc
Grid No. 1 Voltage		
Negative Bias Value	155 Volts	dc
Negative Peak Value	220 Volts	
Positive Bias Value	0 Volts	dc
Positive Peak Value	2 Volts	
Peak Heater-Cathode Voltage		
Heater Negative with Respect to Cathode		
During Warm-up Period Not to Exceed 15 Seconds	450 Volts	
After Equipment Warm-up Period	200 Volts	
Heater Positive with Respect to Cathode	200 Volts	

QUICK REFERENCE DATA

Television Picture Tube
23" Direct Viewed
Rectangular Glass Type
Spherical Faceplate
Gray Filter Glass
Aluminized Screen
Electrostatic Focus
92° Magnetic Deflection
No Ion Trap
External Conductive Coating

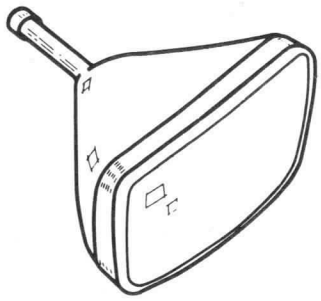

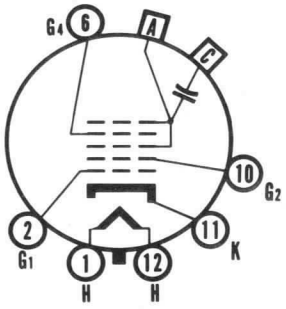

12-L

SYLVANIA
ELECTRONIC TUBES

A Division of
Sylvania Electric Products Inc.

PICTURE TUBE
OPERATIONS

SENECA FALLS, NEW YORK

Prepared and Released By The
TECHNICAL PUBLICATIONS SECTION
EMPORIUM, PENNSYLVANIA

MAY, 1962

File Under
TELEVISION PICTURE TUBES

MAXIMUM RATINGS (Design Maximum Values) Continued

Cathode Drive Service[4]

Maximum Anode Voltage	25,000 Volts	dc
Minimum Anode Voltage	12,000 Volts	dc
Grid No. 4 (Focusing Electrode) Voltage	−400 to +1250 Volts	dc
Grid No. 2 Voltage	700 Volts	dc
Cathode Voltage		
Positive Bias Value	155 Volts	dc
Positive Peak Value	220 Volts	
Negative Bias Value	0 Volts	dc
Negative Peak Value	2 Volts	
Peak Heater-Cathode Voltage		
Heater Negative with Respect to Cathode		
During Warm-up Period Not to Exceed 15 Seconds	450 Volts	
After Equipment Warm-up Period	200 Volts	
Heater Positive with Respect to Cathode	200 Volts	

TYPICAL OPERATING CONDITIONS

Grid Drive Service[3]

Anode Voltage	20,000 Volts	dc
Grid No. 4 Voltage for Focus	0 to +400 Volts	dc
Grid No. 2 Voltage	300 Volts	dc
Grid No. 1 Voltage Required for Cutoff[5]	−40 to −76 Volts	dc

Cathode Drive Service[4]

Anode Voltage	20,000 Volts	dc
Grid No. 4 Voltage for Focus	0 to +400 Volts	dc
Grid No. 2 Voltage	300 Volts	dc
Cathode Voltage Required for Cutoff[5]	+37 to +64 Volts	dc

CIRCUIT VALUES

Grid No. 1 Circuit Resistance	1.5 Megohms Max.

NOTES:

1. *Heater warm-up time is defined as the time required for the voltage across the heater to reach 80 % of the rated heater voltage after applying four (4) times rated heater voltage to a circuit consisting of the tube heater in series with a resistance equal to three (3) times the rated heater voltage divided by the rated heater current.*
2. *External conductive coating must be grounded.*
3. *Voltages are positive with respect to cathode unless otherwise indicated.*
4. *Voltages are positive with respect to Grid No. 1 unless otherwise indicated.*
5. *Visual extinction of focused raster. Extinction of stationary focused spot will require that the absolute value of the bias between cathode and grid No. 1 be increased by about 5 volts.*

WARNING:

X-ray radiation shielding may be necessary to protect against possible danger of personal injury from prolonged exposure at close range if this tube is operated at higher than the manufacturer's Maximum Rated Anode Voltage or 16,000 volts, whichever is less.

OUTLINE

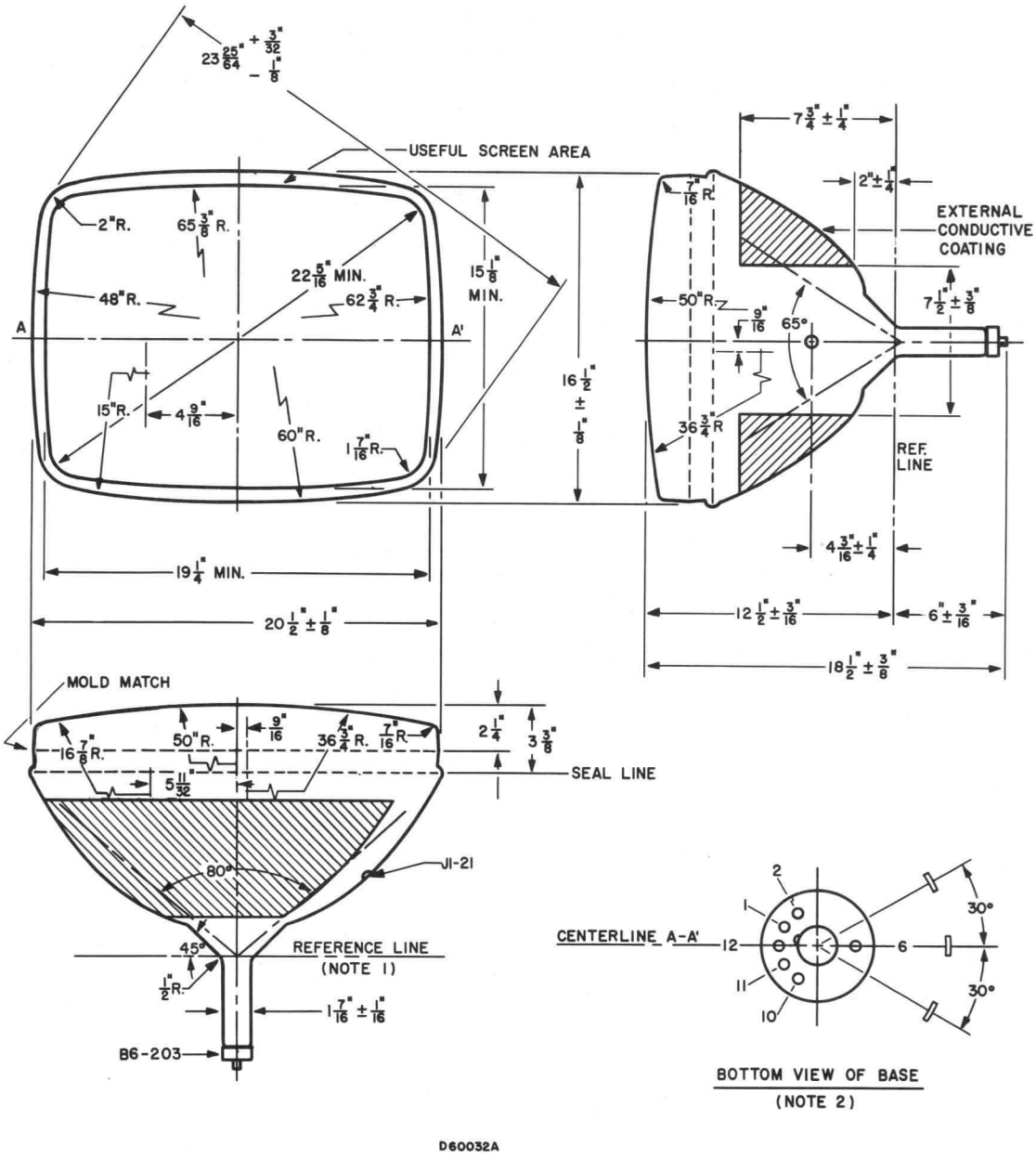

DIAGRAM NOTES:

1. *Reference line is determined by plane C-C' of JEDEC No. 116 Reference Line Gauge, when the gauge is seated against the bulb.*
2. *Base Pin No. 6 aligns with horizontal centerline (A-A') within 30° and is on same side as anode contact, J1-21.*

CHARACTERISTICS

GENERAL DATA

Focusing Method	Electrostatic
Deflection Method	Magnetic
Deflection Angles (Approx.)	
Horizontal	99 Degrees
Diagonal	110 Degrees
Vertical	82 Degrees
Phosphor	Aluminized P4
Fluorescence	White
Persistence	Short to Medium
Faceplate	Bonded Shield
(Gray Filter Glass Safety Plate Laminated Directly to Face of Tube)	
Light Transmittance of Faceplate Assembly (Approx.)	40 Percent
23DJP4: External Surface of Safety Plate Treated to Reduce Specular Reflection	

ELECTRICAL DATA

Heater Voltage	6.3 Volts	
Heater Current	0.30 ± 5 % Ampere	
Heater Warm-up Time[1]	11 Seconds	
Direct Interelectrode Capacitances (Approx.)		
Cathode to All Other Electrodes	5 pf	
Grid No. 1 to All Other Electrodes	6 pf	
External Conductive Coating to Anode[2]	2500 pf	Max.
	2000 pf	Min.

MECHANICAL DATA

Minimum Useful Screen Dimensions (Maximum Assured)	
Height	15 ¼ Inches
Width	19 5/16 Inches
Diagonal	22 5/16 Inches
Area	282 Sq. Inches
Neck Length	4 1/8 Inches
Overall Length	14 3/16 Inches
Bulb	J187A1 or Equiv.
Safety Plate	23DHP4-FP198A1 or Equiv.
	23DJP4 - FP198B1 or Equiv.
Bulb Contact (Recessed Small Cavity Cap)	J1-21
Base	B7-208
Basing	8HR
Weight (Approx.)	32 ½ Pounds

RATINGS

MAXIMUM RATINGS (Design Maximum Values)

Cathode Drive Service[3]		
Maximum Anode Voltage	22,000 Volts	dc
Minimum Anode Voltage	12,000 Volts	dc
Grid No. 4 Voltage (Focusing Electrode)	−550 to +1100 Volts	dc
Grid No. 2 Voltage	700 Volts	dc
Cathode Voltage:		
Maximum Negative Value	0 Volts	dc
Maximum Negative Peak Value	2 Volts	
Maximum Positive Value	155 Volts	dc
Maximum Positive Peak Value	220 Volts	
Peak Heater-Cathode Voltage		
Heater Negative with Respect to Cathode		
During Warm-up Period not to Exceed 15 Secs.	450 Volts	
After Equipment Warm-up Period	200 Volts	
Heater Positive with Respect to Cathode	200 Volts	

QUICK REFERENCE DATA

Television Picture Tube
23″ Direct Viewed
Rectangular Glass Type
Bonded Shield
Gray Filter Glass
Aluminized Screen
Electrostatic Focus
110° Magnetic Deflection
No Ion Trap
External Conductive Coating
6.3 Volt, 300 Ma Heater
23DJP4: Anti-Reflection Treated

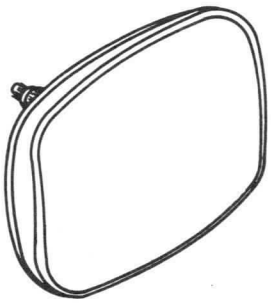

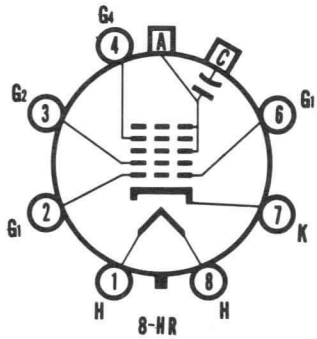

SYLVANIA
ELECTRONIC TUBES

A Division of
Sylvania Electric Products Inc.

PICTURE TUBE
OPERATIONS

SENECA FALLS, NEW YORK

Prepared and Released By The
TECHNICAL PUBLICATIONS SECTION
EMPORIUM, PENNSYLVANIA

APRIL, 1963

File Under
TELEVISION PICTURE TUBES

TYPICAL OPERATING CONDITIONS (Cathode Drive Service)[3]

Anode Voltage	16,000 Volts	dc
Grid No. 4 Voltage for Focus	0 to 400 Volts	dc
Grid No. 2 Voltage[4]	400 Volts	dc
Grid No. 1 Voltage Required for Cutoff[5]	+44 to +78 Volts	dc

CIRCUIT VALUES

Grid No. 1 Circuit Resistance	1.5 Megohms Max.

NOTES:

1. *Heater warm-up time is defined as the time required for the voltage across the heater to reach 80 % of the rated heater voltage after applying four (4) times rated heater voltage to a circuit consisting of the tube heater in series with a resistance equal to three (3) times the rated heater voltage divided by the rated heater current.*
2. *External conductive coating must be grounded.*
3. *Voltages are positive with respect to Grid No. 1 unless indicated otherwise.*
4. *Brightness and resolution improve with increase in Grid No. 2 voltage. A minimum value of 300 volts is recommended.*
5. *Visual extinction of focused raster. Extinction of stationary focused spot will require that these values be about 5 volts more positive.*

WARNING:

X-ray radiation shielding may be necessary to protect against possible danger of personal injury from prolonged exposure at close range if this tube is operated at higher than the manufacturer's Maximum Rated Anode Voltage or 16,000 volts, whichever is less.

OUTLINE

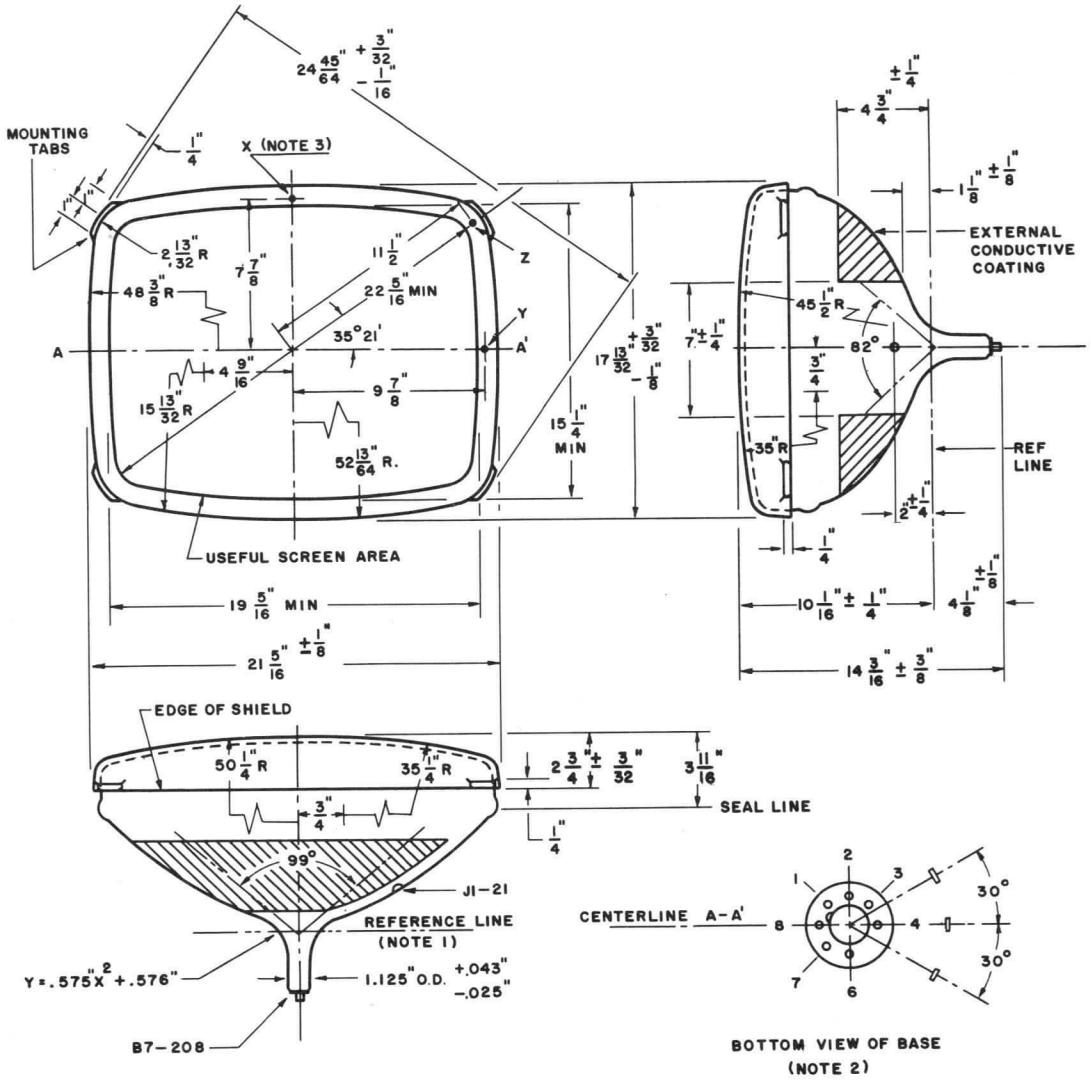

DIAGRAM NOTES:

1. *Reference line is determined by plane C-C' of JEDEC No. 126 Reference Line Gauge, when the gauge is seated against the bulb.*
2. *Base Pin No. 4 aligns with horizontal centerline (A-A') within 30° and is on same side as anode contact, J1-21.*
3. *Planes perpendicular to tube axis and passing through points X, Y, and Z are located as follows:*

   Plane tangent to crown of face to plane of X: .758" Nom.
   Plane of X to plane of Y = .463" ± .030".
   Plane of X to plane of Y = .463" ± .030".
   Plane of X to plane of Z = .970" ± .030".

CHARACTERISTICS

GENERAL DATA

Focusing Method	Electrostatic
Deflection Method	Magnetic
Deflection Angles (Approx.)	
Horizontal	80 Degrees
Diagonal	92 Degrees
Vertical	65 Degrees
Phosphor	Aluminized P4
Fluorescence	White
Persistence	Medium Short
Faceplate	Gray Filter Glass
Light Transmittance at Center (Approx.)	42 Percent

Type 23DKP4 is similar to Type 23AHP4 except that it employs the banded tube with coated funnel construction for integral implosion protection, and has reduced faceplate transmittance.

ELECTRICAL DATA

Heater Voltage	6.3 Volts	
Heater Current	0.60 ± 5 % Ampere	
Heater Warm-up Time[1]	11 Seconds	
Direct Interelectrode Capacitances (Approx.)		
Cathode to All Other Electrodes	5 pf	
Grid No. 1 to All Other Electrodes	6 pf	
External Conductive Coating and Rim Band, to Anode[2]	2500 pf	Max.
	1700 pf	Min.

MECHANICAL DATA

Minimum Useful Screen Dimensions (Maximum Assured)	
Height	15⅛ Inches
Width	19 ¼ Inches
Diagonal	22⅝ Inches
Area	282 Sq. Inches
Neck Length	5 ½ ± 3/16 Inches
Overall Length	18 ± ⅜ Inches
Bulb	J187J
Bulb Contact (Recessed Small Cavity Cap)	J1-21
Base	B6-203
Basing	12L
Weight (Approx.)	29 Pounds

RATINGS

MAXIMUM RATINGS (Design Maximum Values)

Grid Drive Service[3]		
Maximum Anode Voltage	22,000 Volts	dc
Minimum Anode Voltage	12,000 Volts	dc
Grid No. 4 Voltage (Focusing Electrode)	−550 to +1100 Volts	dc
Grid No. 2 Voltage	550 Volts	dc
Grid No. 1 Voltage		
Negative Bias Value	155 Volts	dc
Negative Peak Value	220 Volts	
Positive Bias Value	0 Volt	dc
Positive Peak Value	2 Volts	
Peak Heater-Cathode Voltage		
Heater Negative with Respect to Cathode During Warm-up Period Not to Exceed 15 Seconds	450 Volts	
After Equipment Warm-up Period	200 Volts	
Heater Positive with Respect to Cathode	200 Volts	

QUICK REFERENCE DATA

Television Picture Tube
23″ Direct Viewed
Rectangular Glass Type
Gray Filter Glass
Aluminized Screen
Electrostatic Focus
92° Magnetic Deflection
No Ion Trap
External Conductive Coating
Banded Tube, Coated Funnel

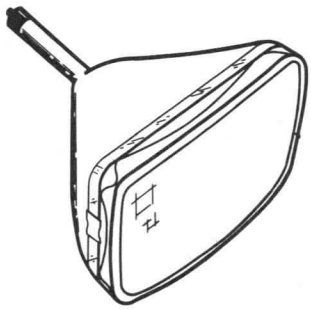

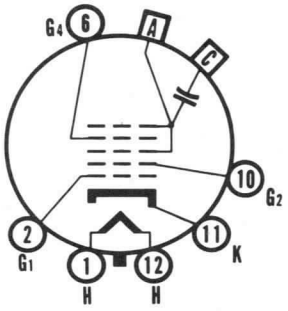

12-L

SYLVANIA
ELECTRONIC TUBES
A Division of
Sylvania Electric Products Inc.
PICTURE TUBE
OPERATIONS
SENECA FALLS, NEW YORK

Prepared and Released By The
TECHNICAL PUBLICATIONS SECTION
EMPORIUM, PENNSYLVANIA
SEPTEMBER, 1963

File Under
TELEVISION PICTURE TUBES

MAXIMUM RATINGS (Design Maximum Values) (Cont'd)

Cathode Drive Service[4]		
Maximum Anode Voltage	22,000 Volts	dc
Minimum Anode Voltage	12,000 Volts	dc
Grid No. 4 Voltage (Focusing Electrode)	−400 to +1250 Volts	dc
Grid No. 2 Voltage	700 Volts	dc
Cathode Voltage		
Positive Bias Value	155 Volts	dc
Positive Peak Value	220 Volts	
Negative Bias Value	0 Volt	dc
Negative Peak Value	2 Volts	
Peak Heater-Cathode Voltage		
Heater Negative with Respect to Cathode		
During Warm-up Period Not to Exceed 15 Seconds	450 Volts	
After Equipment Warm-up Period	200 Volts	
Heater Positive with Respect to Cathode	200 Volts	

TYPICAL OPERATING CONDITIONS

Grid Drive Service[3]		
Anode Voltage	16,000 Volts	dc
Grid No. 4 Voltage for Focus	0 to +400 Volts	dc
Grid No. 2 Voltage	300 Volts	dc
Grid No. 1 Voltage Required for Cutoff[5]	−35 to −72 Volts	dc
Cathode Drive Service[4]		
Anode Voltage	16,000 Volts	dc
Grid No. 4 Voltage for Focus	0 to +400 Volts	dc
Grid No. 2 Voltage	300 Volts	dc
Cathode Voltage Required for Cutoff[5]	+33 to +59 Volts	dc

CIRCUIT VALUES

Grid No. 1 Circuit Resistance	1.5 Megohms Max.

NOTES:

1. *Heater warm-up time is defined as the time required for the voltage across the heater to reach 80 % of the rated heater voltage after applying four (4) times rated heater voltage to a circuit consisting of the tube heater in series with a resistance equal to three (3) times the rated heater voltage divided by the rated heater current.*
2. *External conductive coating and rim band must be grounded.*
3. *Voltages are positive with respect to cathode unless otherwise indicated.*
4. *Voltages are positive with respect to Grid No. 1 unless otherwise indicated.*
5. *Visual extinction of focused raster. Extinction of stationary focused spot will require that the absolute value of the bias between cathode and Grid No. 1 will be increased by about 5 volts.*

WARNING:

X-ray radiation shielding may be necessary to protect against possible danger of personal injury from prolonged exposure at close range if this tube is operated at higher than the manufacturer's Maximum Rated Anode Voltage or 16,000 volts, whichever is less.

OUTLINE

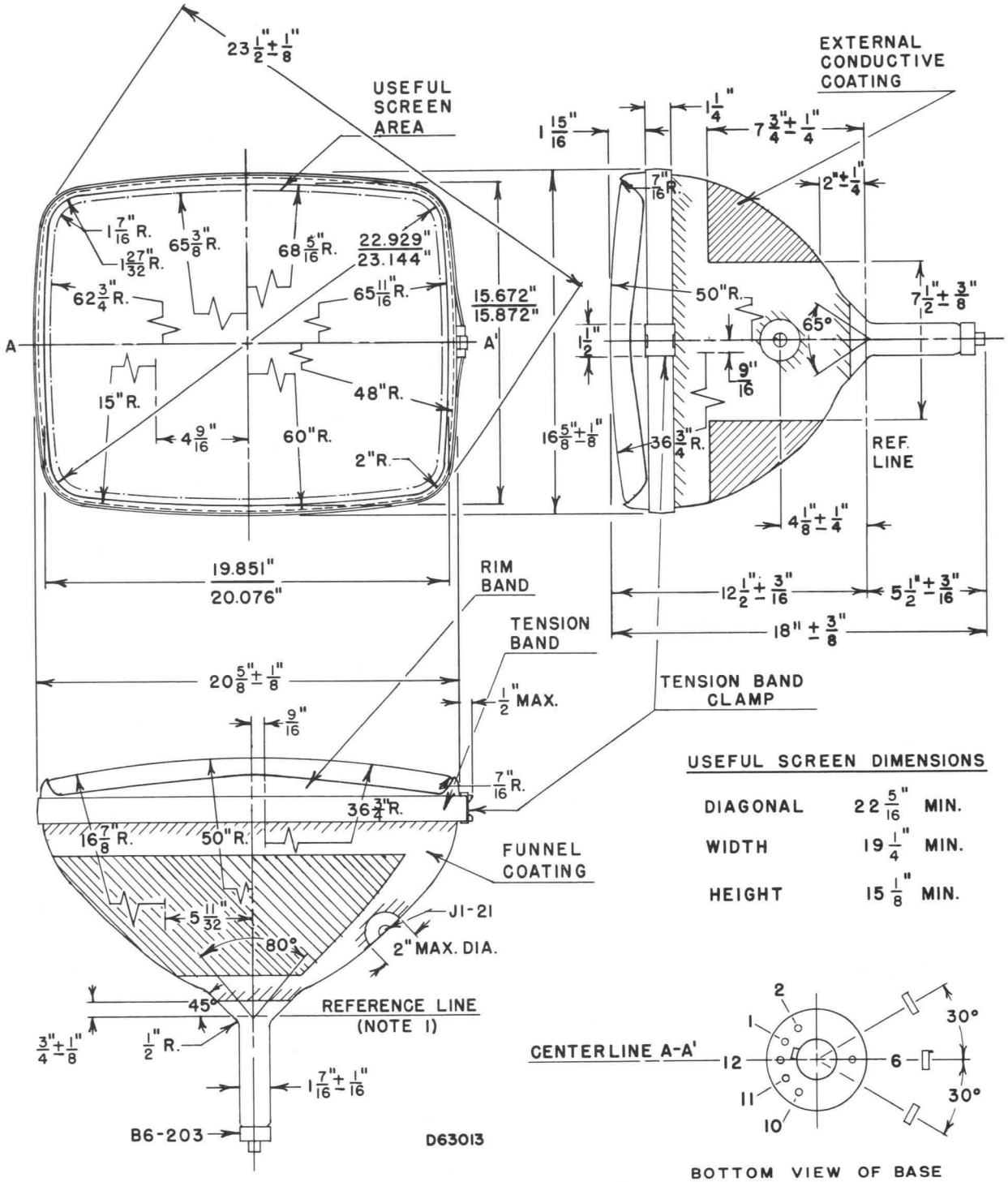

USEFUL SCREEN DIMENSIONS

DIAGONAL	22 5/16"	MIN.
WIDTH	19 1/4"	MIN.
HEIGHT	15 1/8"	MIN.

BOTTOM VIEW OF BASE
(NOTE 2)

DIAGRAM NOTES:

1. *Reference line is determined by plane C-C' of JEDEC No. 116 Reference Line Gauge, when the gauge is seated against the bulb.*
2. *Base Pin No. 6 aligns with horizontal centerline (A-A') within 30° and is on same side as anode contact, J1-21.*

CHARACTERISTICS

GENERAL DATA

Focusing Method	Tri-Potential Electrostatic
Deflection Method	Magnetic
Deflection Angles (approx.)	
Horizontal	99 Degrees
Diagonal	110 Degrees
Vertical	82 Degrees
Phosphor	Aluminized P4
Fluorescence	White
Persistence	Short to Medium
Faceplate	Bonded Shield
(Gray Filter Glass Safety Plate Laminated Directly to Face of Tube)	
Light Transmittance of Faceplate Assembly (approx.)	40 Percent

ELECTRICAL DATA

Heater Voltage	6.3 Volts
Heater Current	0.60 ±5% Ampere
Heater Warm-up Time[1]	11 Seconds
Direct Interelectrode Capacitances (approx.)	
Cathode to All Other Electrodes	5 $\mu\mu$f
Grid No. 1 to All Other Electrodes	6 $\mu\mu$f
External Conductive Coating to Anode[2]	2500 $\mu\mu$f Max.
	2000 $\mu\mu$f Min.

MECHANICAL DATA

Minimum Useful Screen Dimensions (Maximum Assured)	
Height	15 1/4 Inches
Width	19 5/16 Inches
Diagonal	22 5/16 Inches
Area	282 Sq. Inches
Neck Length	3 9/16 ± 1/8 Inches
Overall Length	13 5/8 ± 3/8 Inches
Bulb	J187A or Equiv.
Safety Plate	FP198A or Equiv.
Bulb Contact (Recessed Small Cavity Cap)	J1-21
Base	B7-208
Basing	8JR
Weight (approx.)	32 1/2 Pounds

QUICK REFERENCE DATA

Television Picture Tube
23" Direct Viewed
Rectangular Glass Type
Spherical Faceplate
Bonded Shield
Gray Filter Glass
Aluminized Screen
Tri-Potential Electrostatic Focus
110° Magnetic Deflection
No Ion Trap
External Conductive Coating
Short Neck

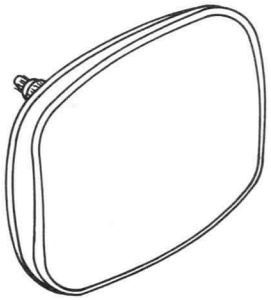

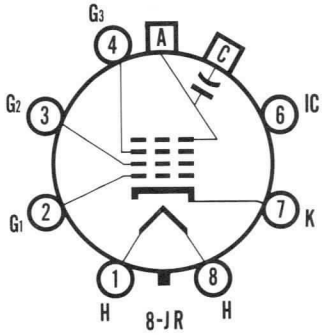

SYLVANIA
ELECTRONIC TUBES
A Division of
Sylvania Electric Products Inc.
PICTURE TUBE OPERATIONS
SENECA FALLS, NEW YORK

Prepared and Released By The
TECHNICAL PUBLICATIONS SECTION
EMPORIUM, PENNSYLVANIA

MARCH, 1960

File Under
TELEVISION PICTURE TUBES

RATINGS

MAXIMUM RATINGS (Design Maximum Values) Grid Drive Service

Anode Voltage	22,000	Volts	dc
Grid No. 3 Voltage (Focusing Electrode	700	Volts	dc
Grid No. 2 Voltage	600	Volts	dc
Grid No. 1 Voltage			
Negative Bias Value	154	Volts	dc
Negative Peak Value	220	Volts	
Positive Bias Value	0	Volts	dc
Positive Peak Value	2	Volts	
Peak Heater-Cathode Voltage			
Heater Negative with Respect to Cathode			
During Warm-up Period not to Exceed 15 Seconds	450	Volts	
After Equipment Warm-up Period	200	Volts	
Heater Positive with Respect to Cathode	200	Volts	

TYPICAL OPERATING CONDITIONS (Grid Drive Service)

Anode Voltage	16,000	Volts	dc
Grid No. 3 Voltage for Focus	0 to +400	Volts	dc
Grid No. 2 Voltage[3]	500	Volts	dc
Grid No. 1 Voltage Required for Cutoff[4]	−43 to −78	Volts	dc

CIRCUIT VALUES

Grid No. 1 Circuit Resistance	1.5	Megohms	Max.

NOTES:

1. *Heater warm-up time is defined as the time required for the voltage across the heater to reach 80% of the rated heater voltage after applying four (4) times rated heater voltage to a circuit consisting of the tube heater in series with a resistance equal to three (3) times the rated heater voltage divided by the rated heater current.*
2. *External conductive coating must be grounded.*
3. *Brightness and resolution improve with increase in Grid No. 2 Voltage. A minimum value of 400 volts is recommended.*
4. *Visual extinction of focused raster. Extinction of stationary focused spot will require that these values be about 5 volts more negative.*

WARNING:

X-ray radiation shielding may be necessary to protect against possible danger of personal injury from prolonged exposure at close range if this tube is operated at higher than the manufacturer's Maximum Rated Anode Voltage or 16,000 volts, whichever is less.

OUTLINE

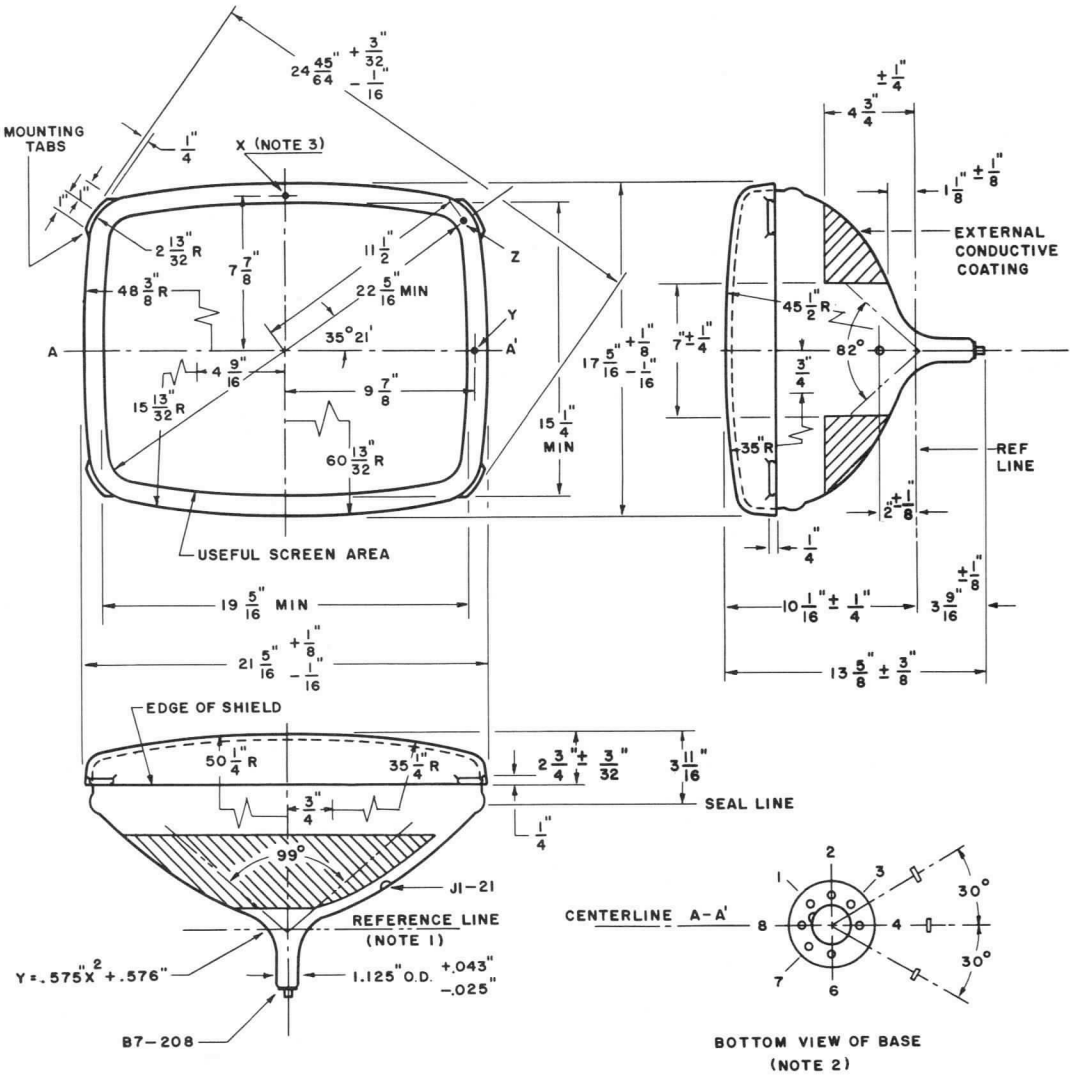

DIAGRAM NOTES:

1. *Reference line is determined by plane C-C' of JEDEC No. 126 Reference Line Gauge, when the gauge is seated against the bulb.*
2. *Base Pin No. 4 aligns with horizontal centerline (A-A') within 30° and is on same side as anode contact, J1-21.*
3. *Planes perpendicular to the tube axis and passing through points X, Y and Z are located as follows:*
   Plane Tangent to crown of face, to plane of X = 0.758" Nom.
   Plane of X to plane of Y = 0.463" ± .030".
   Plane of X to plane of Z = 0.970" ± .030".
   Plane of X to plane of edge of shield = 1.960" Nom.

CHARACTERISTICS

GENERAL DATA

Focusing	Electrostatic
Deflection Method	Magnetic
Deflection Angles (Approx.)	
Horizontal	80 Degrees
Diagonal	92 Degrees
Vertical	65 Degrees
Phosphor	Aluminized P4
Fluorescence	White
Persistence	Medium Short
Faceplate	Gray Filter Glass
Light Transmittance at Center (Approx.)	42 Percent

Type 23DTP4 is similar to Type 23CZP4 except that it employs the banded tube with coated funnel construction for integral implosion protection and has reduced faceplate transmittance.

ELECTRICAL DATA

Heater Voltage	6.3 Volts	
Heater Current	0.60 ± 5 % Ampere	
Heater Warm-up Time[1]	11 Seconds	
Direct Interelectrode Capacitances (Approx.)		
Cathode to All Other Electrodes	5 pf	
Grid No. 1 to All Other Electrodes	6 pf	
External Conductive Coating and Rim Band to Anode[2]	2500 pf	Max.
	1700 pf	Min.

MECHANICAL DATA

Minimum Useful Screen Dimensions (Maximum Assured)	
Height	15 1/8 Inches
Width	19 1/4 Inches
Diagonal	22 5/16 Inches
Area	282 Sq. Inches
Neck Length	6 ± 3/16 Inches
Overall Length	18 1/2 ± 3/8 Inches
Bulb	J187J
Bulb Contact (Recessed Small Cavity Cap)	J1-21
Base	B6-203
Basing	12L
Weight (Approx.)	29 Pounds

RATINGS

MAXIMUM RATINGS (Design Maximum Values)

Grid Drive Service[3]		
Maximum Anode Voltage	25,000 Volts	dc
Minimum Anode Voltage	12,000 Volts	dc
Grid No. 4 (Focusing Electrode) Voltage	−550 to +1100 Volts	dc
Grid No. 2 Voltage	550 Volts	dc
Grid No. 1 Voltage		
Negative Bias Value	155 Volts	dc
Negative Peak Value	220 Volts	
Positive Bias Value	0 Volt	dc
Positive Peak Value	2 Volts	
Peak Heater-Cathode Voltage		
Heater Negative with Respect to Cathode During Warm-up Period Not to Exceed 15 Seconds	450 Volts	
After Equipment Warm-up Period	200 Volts	
Heater Positive with Respect to Cathode	200 Volts	

QUICK REFERENCE DATA

Television Picture Tube
23″ Direct Viewed
Rectangular Glass Type
Gray Filter Glass
Aluminized Screen
Electrostatic Focus
92° Magnetic Deflection
No Ion Trap
External Conductive Coating
Banded Tube, Coated Funnel

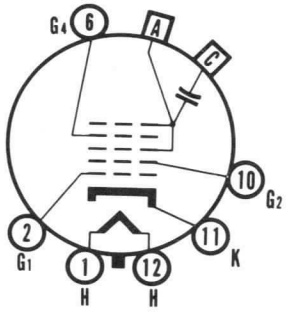

12-L

SYLVANIA
ELECTRONIC TUBES

A Division of
Sylvania Electric Products Inc.

PICTURE TUBE
OPERATIONS

SENECA FALLS, NEW YORK

Prepared and Released By The
TECHNICAL PUBLICATIONS SECTION
EMPORIUM, PENNSYLVANIA
SEPTEMBER, 1963

File Under
TELEVISION PICTURE TUBES

MAXIMUM RATINGS (Design Maximum Values) (Cont'd)

Cathode Drive Service[4]		
Maximum Anode Voltage	25,000 Volts	dc
Minimum Anode Voltage	12,000 Volts	dc
Grid No. 4 (Focusing Electrode) Voltage	−400 to +1250 Volts	dc
Grid No. 2 Voltage	700 Volts	dc
Cathode Voltage		
Positive Bias Value	155 Volts	dc
Positive Peak Value	220 Volts	
Negative Bias Value	0 Volt	dc
Negative Peak Value	2 Volts	
Peak Heater-Cathode Voltage		
Heater Negative with Respect to Cathode		
During Warm-up Period Not to Exceed 15 Seconds	450 Volts	
After Equipment Warm-up Period	200 Volts	
Heater Positive with Respect to Cathode	200 Volts	

TYPICAL OPERATING CONDITIONS

Grid Drive Service[3]		
Anode Voltage	20,000 Volts	dc
Grid No. 4 Voltage for Focus	0 to +400 Volts	dc
Grid No. 2 Voltage	300 Volts	dc
Grid No. 1 Voltage Required for Cutoff[5]	−40 to −76 Volts	dc
Cathode Drive Service[4]		
Anode Voltage	20,000 Volts	dc
Grid No. 4 Voltage for Focus	0 to +400 Volts	dc
Grid No. 2 Voltage	300 Volts	dc
Cathode Voltage Required for Cutoff[5]	+37 to +64 Volts	dc

CIRCUIT VALUES

Grid No. 1 Circuit Resistance	1.5 Megohms Max.

NOTES:

1. *Heater warm-up time is defined as the time required for the voltage across the heater to reach 80 % of the rated heater voltage after applying four (4) times rated heater voltage to a circuit consisting of the tube heater in series with a resistance equal to three (3) times the rated heater voltage divided by the rated heater current.*
2. *External conductive coating and rim band must be grounded.*
3. *Voltages are positive with respect to cathode unless otherwise indicated.*
4. *Voltages are positive with respect to Grid No. 1 unless otherwise indicated.*
5. *Visual extinction of focused raster. Extinction of stationary focused spot will require that the absolute value of the bias between cathode and grid No. 1 be increased by about 5 volts.*

WARNING:

X-ray radiation shielding may be necessary to protect against possible danger of personal injury from prolonged exposure at close range if this tube is operated at higher than the manufacturer's Maximum Rated Anode Voltage or 16,000 volts, whichever is less.

OUTLINE

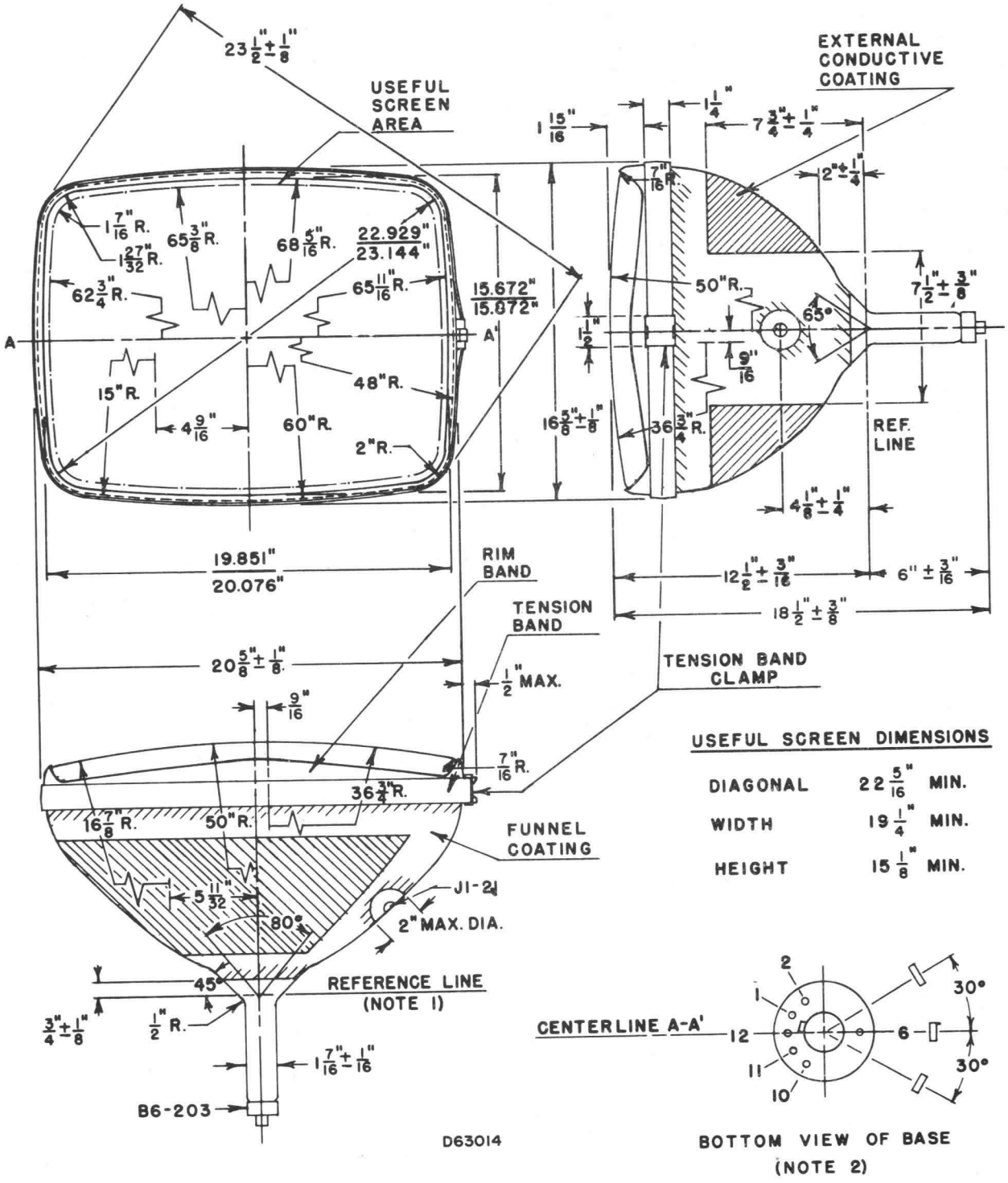

USEFUL SCREEN DIMENSIONS

DIAGONAL	22 5/16" MIN.
WIDTH	19 1/4" MIN.
HEIGHT	15 1/8" MIN.

BOTTOM VIEW OF BASE
(NOTE 2)

DIAGRAM NOTES:

1. *Reference line is determined by plane C-C' of JEDEC No. 116 Reference Line Gauge, when the gauge is seated against the bulb.*
2. *Base Pin No. 6 aligns with horizontal centerline (A-A') within 30° and is on same side as anode contact, J1-21.*

CHARACTERISTICS

GENERAL DATA

Focusing Method	Electrostatic
Deflection Method	Magnetic
Deflection Angles (Approx.)	
Horizontal	100 Degrees
Diagonal	114 Degrees
Vertical	83 Degrees
Phosphor	Aluminized P4
Fluorescence	White
Persistence	Medium Short
Faceplate	Gray Filter Glass
Light Transmittance (Approx.)	42 Percent

Types 23DVP4 and 23DZP4 are similar to Types 23MP4 and 23ALP4 respectively, except that they employ the banded tube with coated funnel construction for integral implosion protection, and have reduced faceplate transmittance.

ELECTRICAL DATA

	23DZP4	23DVP4	
Heater Voltage	6.3	6.3 Volts	
Heater Current ± 5 %	0.45	0.60 Ampere	
Heater Warm-up Time[1]	11	11 Seconds	
Direct Interelectrode Capacitances (Approx.)			
Cathode to All Other Electrodes		5 pf	
Grid No. 1 to All Other Electrodes		6 pf	
External Conductive Coating and Rim Band to Anode[2]		2500 pf	Max.
		1700 pf	Min.

MECHANICAL DATA

Minimum Useful Screen Dimensions (Maximum Assured)	
Height	15 1/8 Inches
Width	19 1/4 Inches
Diagonal	22 5/16 Inches
Minimum Useful Screen Area	282 Sq. Inches
Neck Length	5 1/8 ± 1/8 Inches
Overall Length	14 7/16 ± 5/16 Inches
Bulb Contact (Recessed Small Cavity Cap)	J1-21
Bulb	J187L
Base	B7-208
Basing	8HR
Weight (Approx.)	28 Pounds

RATINGS

MAXIMUM RATINGS (Design Maximum Values)

Grid Drive Service[3]		
Maximum Anode Voltage	22,000 Volts	dc
Minimum Anode Voltage	11,000 Volts	dc
Grid No. 4 Voltage (Focusing Electrode)	−550 to +1100 Volts	dc
Maximum Grid No. 2 Voltage	550 Volts	dc
Minimum Grid No. 2 Voltage	200 Volts	dc
Grid No. 1 Voltage		
Negative Bias Value	155 Volts	dc
Negative Peak Value	220 Volts	
Positive Bias Value	0 Volt	dc
Positive Peak Value	2 Volts	
Peak Heater-Cathode Voltage		
Heater Negative with Respect to Cathode During Warm-up Period Not to Exceed 15 Seconds	450 Volts	
After Equipment Warm-up Period	200 Volts	
Heater Positive with Respect to Cathode	200 Volts	

QUICK REFERENCE DATA

Television Picture Tube
23″ Direct Viewed
Rectangular Glass Type
Gray Filter Glass
Aluminized Screen
Electrostatic Focus
114° Magnetic Deflection
1 1/8″ Neck Diameter
No Ion Trap
External Conductive Coating
Banded Tube, Coated Funnel
23DVP4: 6.3v/600 ma Heater
23DZP4: 6.3v/450 ma Heater

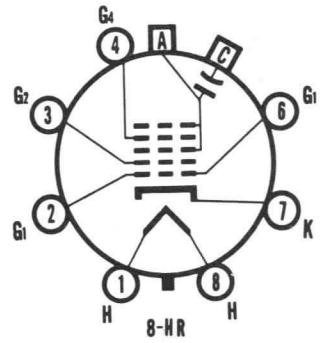

SYLVANIA
ELECTRONIC TUBES
A Division of
Sylvania Electric Products Inc.
PICTURE TUBE
OPERATIONS
SENECA FALLS, NEW YORK

Prepared and Released By The
TECHNICAL PUBLICATIONS SECTION
EMPORIUM, PENNSYLVANIA
SEPTEMBER, 1963

File Under
TELEVISION PICTURE TUBES

MAXIMUM RATINGS (Design Maximum Values) (Cont'd)

Cathode Drive Service[4]		
Maximum Anode Voltage	22,000 Volts	dc
Minimum Anode Voltage	11,000 Volts	dc
Grid No. 4 Voltage (Focusing Electrode)	−400 to +1250 Volts	dc
Maximum Grid No. 2 Voltage	700 Volts	dc
Minimum Grid No. 2 Voltage	350 Volts	dc
Cathode Voltage		
Positive Bias Value	155 Volts	dc
Positive Peak Value	220 Volts	
Negative Bias Value	0 Volt	dc
Negative Peak Value	2 Volts	
Peak Heater-Cathode Voltage		
Heater Negative with Respect to Cathode		
During Warm-up Period Not to Exceed 15 Seconds	450 Volts	
After Equipment Warm-up Period	200 Volts	
Heater Positive with Respect to Cathode	200 Volts	

TYPICAL OPERATING CONDITIONS

Grid Drive Service[3]		
Anode Voltage	18,000 Volts	dc
Grid No. 4 Voltage for Focus	0 to 400 Volts	dc
Grid No. 2 Voltage	400 Volts	dc
Grid No. 1 Voltage Required for Cutoff[5]	−46 to −94 Volts	dc
Cathode Drive Service[4]		
Anode Voltage	18,000 Volts	dc
Grid No. 4 Voltage for Focus	0 to 400 Volts	dc
Grid No. 2 Voltage	400 Volts	dc
Cathode Voltage Required for Cutoff[5]	42 to 78 Volts	dc

CIRCUIT VALUES:

Grid No. 1 Circuit Resistance	1.5 Megohms Max.

NOTES:

1. *Heater warm-up time is defined as the time required for the voltage across the heater to reach 80 % of its rated value after applying four (4) times rated heater voltage to a circuit consisting of the tube heater in series with a resistance equal to three (3) times rated heater voltage divided by rated heater current.*
2. *External conductive coating and rim band must be grounded.*
3. *Voltages are positive with respect to Cathode unless indicated otherwise.*
4. *Voltages are positive with respect to Grid No. 1 unless indicated otherwise.*
5. *Visual extinction of focused raster. For cutoff of the undeflected spot, the absolute value of the bias between cathode and grid will increase by about 5 volts.*

WARNING:

X-ray radiation shielding may be necessary to protect against possible danger of personal injury from prolonged exposure at close range if this tube is operated at higher than the manufacturer's Maximum Rated Anode Voltage or 16,000 volts, whichever is less.

OUTLINE

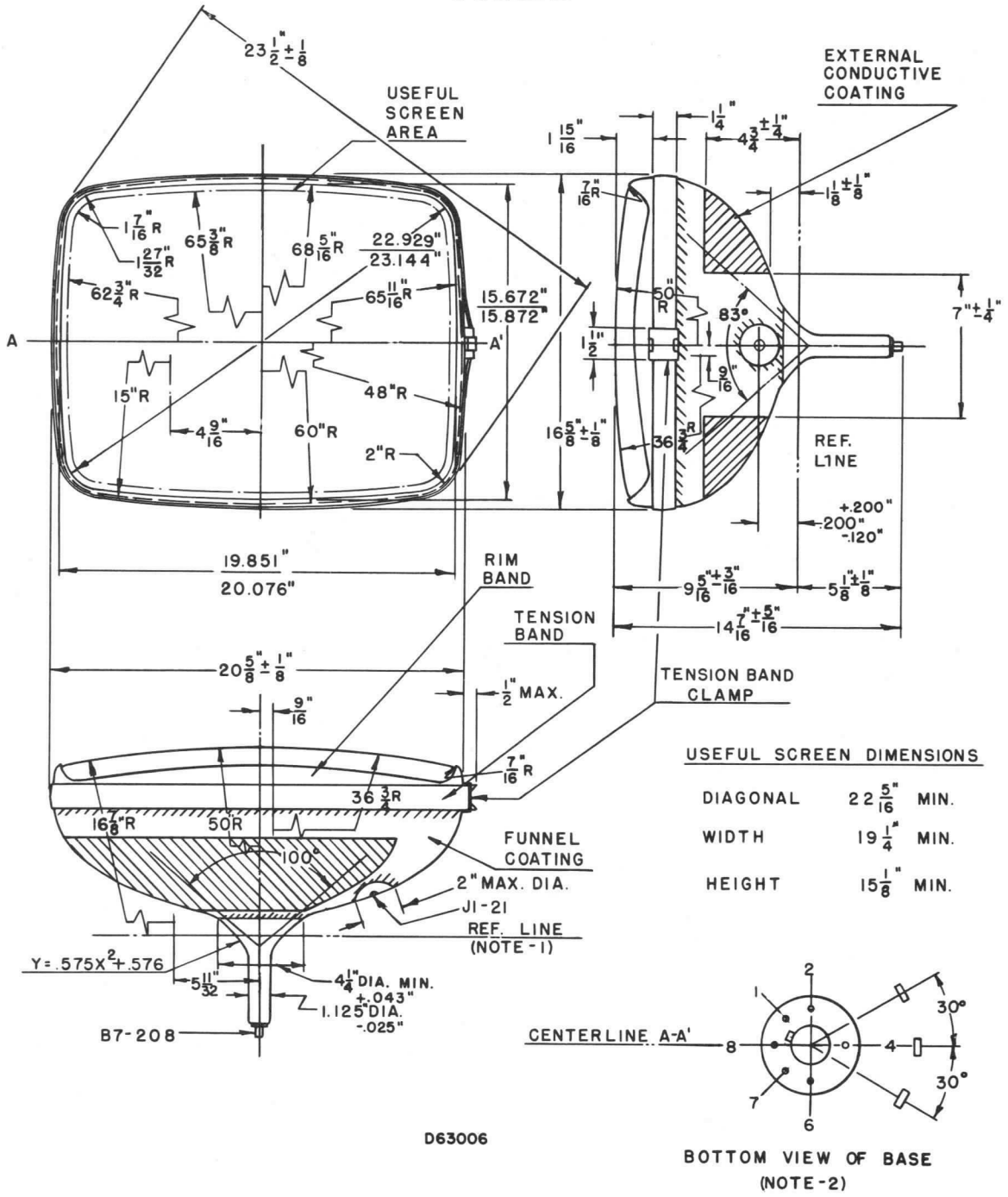

USEFUL SCREEN DIMENSIONS

DIAGONAL	$22\frac{5}{16}$" MIN.
WIDTH	$19\frac{1}{4}$" MIN.
HEIGHT	$15\frac{1}{8}$" MIN.

BOTTOM VIEW OF BASE
(NOTE-2)

DIAGRAM NOTES:

1. *Reference line is determined by plane C-C' of JEDEC No. 126 Reference Line Gauge, when the gauge is seated against the bulb.*
2. *Base Pin No. 4 aligns with horizontal centerline (A-A') within 30° and is on same side as anode contact, J1-21.*

CHARACTERISTICS

GENERAL DATA

Focusing Method	Electrostatic
Deflection Method	Magnetic
Deflection Angles (Approx.)	
Horizontal	99 Degrees
Diagonal	110 Degrees
Vertical	82 Degrees
Phosphor	Aluminized P4
Fluorescence	White
Persistence	Short to Medium
Faceplate	Bonded Shield
(Gray Filter Glass Safety Plate Laminated Directly to Face of Tube)	
Light Transmittance of Faceplate Assembly (Approx.)	40 Percent

ELECTRICAL DATA

Heater Voltage	6.3 Volts	
Heater Current	0.60 ± 5% Ampere	
Heater Warm-up Time[1]	11 Seconds	
Direct Interelectrode Capacitances (Approx.)		
Cathode to All Other Electrodes	5 μμf	
Grid No. 1 to All Other Electrodes	6 μμf	
External Conductive Coating to Anode[2]	2500 μμf	Max.
	1700 μμf	Min.

MECHANICAL DATA

Minimum Useful Screen Dimensions (Maximum Assured)	
Height	15¼ Inches
Width	19⁵⁄₁₆ Inches
Diagonal	22⁵⁄₁₆ Inches
Area	282 Sq. Inches
Neck Length	5⅛ Inches
Overall Length	15³⁄₁₆ Inches
Bulb	J187A or Equivalent
Safety Plate	FP198A or Equivalent
Bulb Contact (Recessed Small Cavity Cap)	J1-21
Base	B7-219
Basing	8KP
Weight (Approx)	32½ Pounds

RATINGS

MAXIMUM RATINGS (Design Maximum Values)

Cathode Drive Service[3]

Maximum Anode Voltage	22,000 Volts	dc
Minimum Anode Voltage	13,200 Volts	dc
Grid No. 3 Voltage (Focusing Electrode)	−550 to +1100 Volts	dc
Grid No. 2 Voltage	70 Volts	dc
Cathode Voltage		
Positive Bias Value	154 Volts	dc
Positive Peak Value	220 Volts	
Negative Bias Value	0 Volts	dc
Negative Peak Value	2 Volts	

QUICK REFERENCE DATA

Television Picture Tube
23″ Direct Viewed
Rectangular Glass Type
Spherical Faceplate
Bonded Shield
Gray Filter Glass
Aluminized Screen
Neck Length 5⅛″
Electrostatic Focus
110° Magnetic Deflection
No Ion Trap
External Conductive Coating

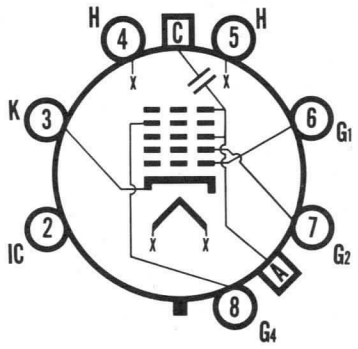

8KP

SYLVANIA
ELECTRONIC TUBES
A Division of
Sylvania Electric Products Inc.
PICTURE TUBE OPERATIONS
SENECA FALLS, NEW YORK

Prepared and Released By The
TECHNICAL PUBLICATIONS SECTION
EMPORIUM, PENNSYLVANIA

JULY, 1960

File Under
TELEVISION PICTURE TUBES

MAXIMUM RATINGS (Design Maximum Values) Cathode Drive Service[3] (Cont'd.)

Peak Heater-Cathode Voltage	
Heater Negative with Respect to Cathode	
During Warm-up Period not to Exceed 15 Seconds	450 Volts
After Equipment Warm-up Period	200 Volts
Heater Positive with Respect to Cathode	200 Volts

TYPICAL OPERATING CONDITIONS (Cathode Drive Service)[3]

Anode Voltage	16,000 Volts	dc
Grid No. 3 Voltage for Focus	0 to +400 Volts	dc
Grid No. 2 Voltage[3]	50 Volts	dc
Cathode Voltage Required for Cutoff[4]	+32 to +47 Volts	dc

CIRCUIT VALUES

Grid No. 1 Circuit Resistance	1.5 Megohms Max.

NOTES:

1. *Heater warm-up time is defined as the time required for the voltage across the heater to reach 80% of the rated heater voltage after applying four (4) times rated heater voltage to a circuit consisting of the tube heater in series with a resistance equal to three (3) times the rated heater voltage divided by the rated heater current.*
2. *External conductive coating must be grounded.*
3. *Voltages are positive with respect to Grid No. 1 unless indicated otherwise.*
4. *Visual extinction of focused raster. Extinction of stationary focused spot will require that these values be about 5 volts more positive.*

WARNING:

X-ray radiation shielding may be necessary to protect against possible danger of personal injury from prolonged exposure at close range if this tube is operated at higher than the manufacturer's Maximum Rated Anode Voltage or 16,000 volts, whichever is less.

OUTLINE

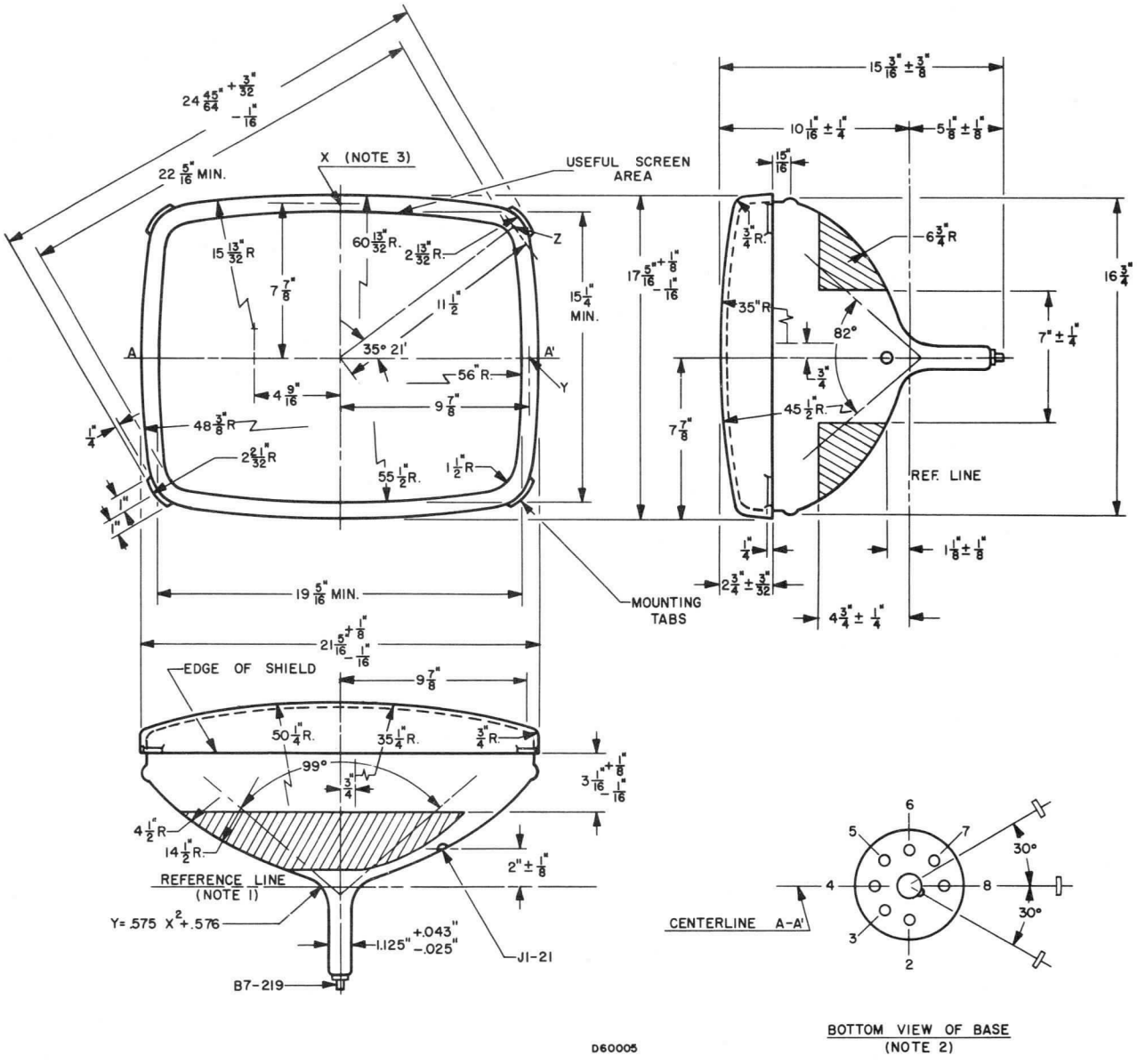

DIAGRAM NOTES:

1. *Reference line is determined by plane C-C' of JEDEC No. 126 Reference Line Gauge, when the gauge is seated against the bulb.*
2. *Base Pin No. 8 aligns with horizontal centerline (A-A') within 30° and is on same side as anode contact, J1-21.*
3. *Planes perpendicular to the axis and passing through points X, Y and Z are located as follows:*

   Plane tangent to crown of face, to plane of X = 0.758" Nom.
   Plane of X to plane of Y = 0.463" ± .030
   Plane of X to plane of Z = 0.970" ± .030

CHARACTERISTICS

GENERAL DATA

Focusing Method	Electrostatic
Deflection Method	Magnetic
Deflection Angles (Approx.)	
Horizontal	100 Degrees
Diagonal	114 Degrees
Vertical	83 Degrees
Phosphor	Aluminized P4
Fluorescence	White
Persistence	Medium Short
Faceplate	Gray Filter Glass
Light Transmittance (Approx.)	42 Percent

ELECTRICAL DATA

Heater Voltage	6.3 Volts	
Heater Current	0.45 ± 5 % Ampere	
Heater Warm-up Time[1]	11 Seconds	
Direct Interelectrode Capacitances (Approx.)		
Cathode to All Other Electrodes	5 pf	
Grid No. 1 to All Other Electrodes	6 pf	
External Conductive Coating and Rim Band to Anode[2]	2500 pf	Max.
	1700 pf	Min.
Resistance Between External Conductive Coating and Metal Band	50 Megohms	Min.

MECHANICAL DATA

Minimum Useful Screen Dimensions (Maximum Assured)	
Height	$15\frac{1}{8}$ Inches
Width	$19\frac{1}{4}$ Inches
Diagonal	$22\frac{5}{16}$ Inches
Minimum Useful Screen Area	282 Sq. Inches
Neck Length	$5\frac{1}{8} \pm \frac{1}{8}$ Inches
Overall Length	$14\frac{17}{32} \pm \frac{9}{32}$ Inches
Bulb Contact (Recessed Small Cavity Cap)	J1-21
Bulb	J187L
Base	B7-208
Basing	8HR
Weight (Approx.)	28 Pounds

RATINGS

MAXIMUM RATINGS (Design Maximum Values)

Grid Drive Service[3]		
Maximum Anode Voltage	22,000 Volts	dc
Minimum Anode Voltage	11,000 Volts	dc
Grid No. 4 Voltage (Focusing Electrode)	−550 to +1100 Volts	dc
Maximum Grid No. 2 Voltage	550 Volts	dc
Minimum Grid No. 2 Voltage	200 Volts	dc
Grid No. 1 Voltage		
Negative Bias Value	155 Volts	dc
Negative Peak Value	220 Volts	
Positive Bias Value	0 Volt	dc
Positive Peak Value	2 Volts	
Peak Heater-Cathode Voltage		
Heater Negative with Respect to Cathode During Warm-up Period Not to Exceed 15 Seconds	450 Volts	
After Equipment Warm-up Period	300 Volts	
Heater Positive with Respect to Cathode	200 Volts	
DC Component	100 Volts	

QUICK REFERENCE DATA

Television Picture Tube
23″ Direct Viewed
Rectangular Glass Type
Gray Filter Glass
Aluminized Screen
Electrostatic Focus
114° Magnetic Deflection
1⅛″ Neck Diameter
No Ion Trap
External Conductive Coating
Banded Tube Integral Implosion Protection

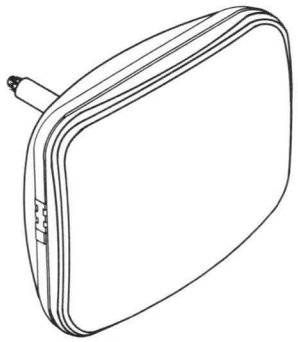

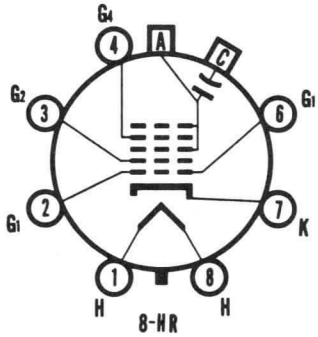

SYLVANIA ELECTRIC PRODUCTS INC.

Electronic Components Group
ELECTRONIC TUBE DIVISION
SENECA FALLS, NEW YORK

A Technical Publication

JULY, 1965

File Under

TELEVISION PICTURE TUBES

MAXIMUM RATINGS (Design Maximum Values) (Continued)

Cathode Drive Service[4]		
Maximum Anode Voltage	22,000 Volts	dc
Minimum Anode Voltage	11,000 Volts	dc
Grid No. 4 Voltage (Focusing Electrode)	−400 to +1250 Volts	dc
Maximum Grid No. 2 Voltage	700 Volts	dc
Minimum Grid No. 2 Voltage	350 Volts	dc
Cathode Voltage		
Positive Bias Value	155 Volts	dc
Positive Peak Value	220 Volts	
Negative Bias Value	0 Volt	dc
Negative Peak Value	2 Volts	
Peak Heater-Cathode Voltage		
Heater Negative with Respect to Cathode		
During Warm-up Period Not to Exceed 15 Seconds	450 Volts	
After Equipment Warm-up Period	300 Volts	
Heater Positive with Respect to Cathode	200 Volts	
DC Component	100 Volts	

TYPICAL OPERATING CONDITIONS

Grid Drive Service[3]		
Anode Voltage	18,000 Volts	dc
Grid No. 4 Voltage for Focus	−200 to +200 Volts	dc
Grid No. 2 Voltage	400 Volts	dc
Grid No. 1 Voltage Required for Cutoff[5]	−48 to −96 Volts	dc
Cathode Drive Service[4]		
Anode Voltage	18,000 Volts	dc
Grid No. 4 Voltage for Focus	−200 to +200 Volts	dc
Grid No. 2 Voltage	400 Volts	dc
Cathode Voltage Required for Cutoff[5]	44 to 80 Volts	dc

CIRCUIT VALUES:

Grid No. 1 Circuit Resistance	1.5 Megohms Max.

NOTES:

1. *Heater warm-up time is defined as the time required for the voltage across the heater to reach 80 % of its rated value after applying four (4) times rated heater voltage to a circuit consisting of the tube heater in series with a resistance equal to three (3) times rated heater voltage divided by rated heater current.*
2. *External conductive coating and rim band must be grounded.*
3. *Voltages are positive with respect to Cathode unless indicated otherwise.*
4. *Voltages are positive with respect to Grid No. 1 unless indicated otherwise.*
5. *Visual extinction of focused raster. For cutoff of the undeflected spot, the absolute value of the bias between cathode and grid will increase by about 5 volts.*

WARNING:

X-ray radiation shielding may be necessary to protect against possible danger of personal injury from prolonged exposure at close range if this tube is operated at higher than the manufacturer's Maximum Rated Anode Voltage or 16,000 volts, whichever is less.

OUTLINE

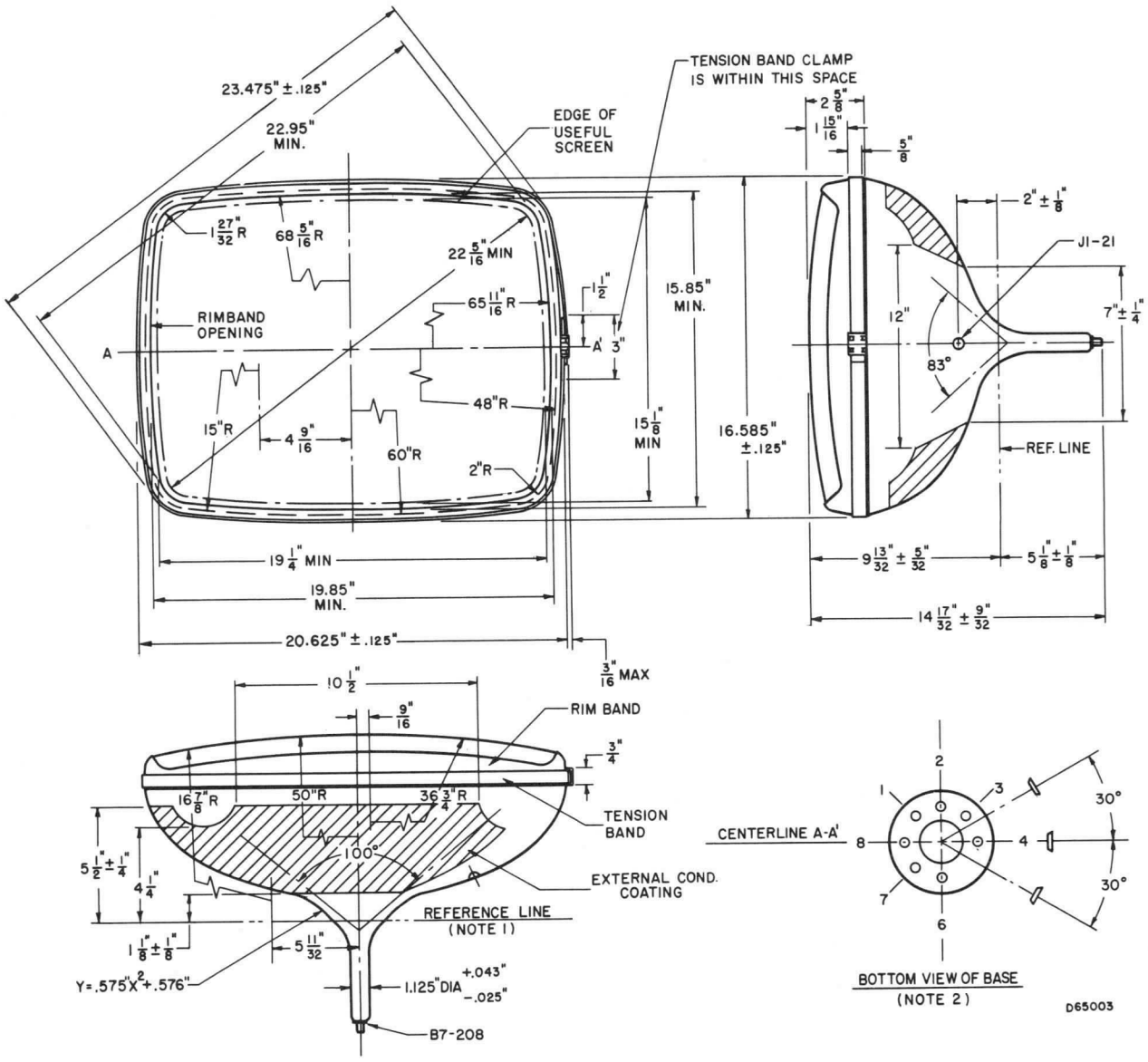

DIAGRAM NOTES:

1. *Reference Line is determined by plane C-C' of JEDEC No. 126 Reference Line Gauge, when the gauge is seated against the bulb.*
2. *Base Pin No. 4 aligns with horizontal centerline (A-A') within 30° and is on same side as anode contact, J1-21.*

CHARACTERISTICS

GENERAL DATA

Focusing Method	Electrostatic
Deflection Method	Magnetic
Deflection Angles (Approx.)	
Horizontal	100 Degrees
Diagonal	114 Degrees
Vertical	83 Degrees
Phosphor	Aluminized P4
Fluorescence	White
Persistence	Medium Short
Faceplate	Gray Filter Glass
Light Transmittance (Approx.)	42 Percent

ELECTRICAL DATA

Heater Voltage	6.3 Volts	
Heater Current	0.60 ± 5 % Ampere	
Heater Warm-up Time[1]	11 Seconds	
Direct Interelectrode Capacitances (Approx.)		
Cathode to All Other Electrodes	5 pf	
Grid No. 1 to All Other Electrodes	6 pf	
External Conductive Coating and Metal Frame to Anode[2]	2500 pf	Max.
	1700 pf	Min.
Resistance Between External Conductive Coating and Metal Frame	50 Megohms	Min.

MECHANICAL DATA

Minimum Useful Screen Dimensions (Maximum Assured)	
Height	15 1/8 Inches
Width	19 1/4 Inches
Diagonal	22 5/16 Inches
Minimum Useful Screen Area	282 Sq. Inches
Neck Length	5 1/8 ± 1/8 Inches
Overall Length	14 17/32 ± 9/32 Inches
Bulb Contact (Recessed Small Cavity Cap)	J1-21
Bulb	J187L
Base	B7-208
Basing	8HR
Weight (Approx.)	28 Pounds

RATINGS

MAXIMUM RATINGS (Design Maximum Values)

Grid Drive Service[4]

Maximum Anode Voltage	22,000 Volts	dc
Minimum Anode Voltage	11,000 Volts	dc
Grid No. 4 Voltage (Focusing Electrode)	−550 to +1100 Volts	dc
Maximum Grid No. 2 Voltage	550 Volts	dc
Minimum Grid No. 2 Voltage	200 Volts	dc
Grid No. 1 Voltage		
Negative Bias Value	155 Volts	dc
Negative Peak Value	220 Volts	
Positive Bias Value	0 Volt	dc
Positive Peak Value	2 Volts	
Peak Heater-Cathode Voltage		
Heater Negative with Respect to Cathode During Warm-up Period Not to Exceed 15 Seconds	450 Volts	
After Equipment Warm-up Period	300 Volts	
Heater Positive with Respect to Cathode	200 Volts	
DC Component	100 Volts	

QUICK REFERENCE DATA

Television Picture Tube
23″ Direct Viewed
Rectangular Glass Type
Spherical Faceplate
Gray Filter Glass
Aluminized Screen
Electrostatic Focus
114° Magnetic Deflection
1 1/8″ Neck Diameter
No Ion Trap
External Conductive Coating
Bonded Frame (Filled Rim)
Implosion Protection

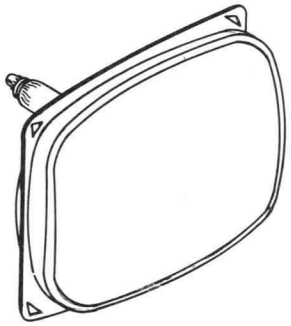

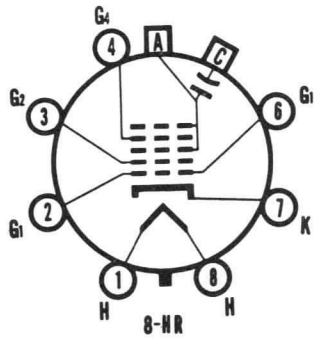

SYLVANIA ELECTRIC PRODUCTS INC.

Electronic Components Group
ELECTRONIC TUBE DIVISION
SENECA FALLS, NEW YORK

A Technical Publication

JULY, 1965

File Under

TELEVISION PICTURE TUBES

MAXIMUM RATINGS (Design Maximum Values) (Continued)

Cathode Drive Service[3]

Maximum Anode Voltage	22,000 Volts	dc
Minimum Anode Voltage	11,000 Volts	dc
Grid No. 4 Voltage (Focusing Electrode)	−400 to +1250 Volts	dc
Maximum Grid No. 2 Voltage	700 Volts	dc
Minimum Grid No. 2 Voltage	300 Volts	dc
Cathode Voltage		
Positive Bias Value	155 Volts	dc
Positive Peak Value	220 Volts	
Negative Bias Value	0 Volts	dc
Negative Peak Value	2 Volts	
Peak Heater-Cathode Voltage		
Heater Negative with Respect to Cathode		
During Warm-up Period Not to Exceed 15 Seconds	450 Volts	
After Equipment Warm-up Period	300 Volts	
Heater Positive with Respect to Cathode	200 Volts	
DC Component	100 Volts	

TYPICAL OPERATING CONDITIONS

Grid Drive Service[4]

Anode Voltage	18,000 Volts	dc
Grid No. 4 Voltage for Focus	−200 to +200 Volts	dc
Grid No. 2 Voltage	400 Volts	dc
Grid No. 1 Voltage Required for Cutoff[5]	−48 to −96 Volts	dc

Cathode Drive Service[3]

Anode Voltage	18,000 Volts	dc
Grid No. 4 Voltage for Focus	−200 to +200 Volts	dc
Grid No. 2 Voltage	400 Volts	dc
Cathode Voltage Required for Cutoff[5]	44 to 80 Volts	dc

CIRCUIT VALUES

Grid No. 1 Circuit Resistance	1.5 Megohms Max.

NOTES:

1. *Heater warm-up time is defined as the time required for the voltage across the heater to reach 80 % of its rated value after applying four (4) times rated heater voltage to a circuit consisting of the tube heater in series with a resistance equal to three (3) times rated heater voltage divided by rated heater current.*
2. *External conductive coating and metal frame must be grounded.*
3. *Voltages are positive with respect to Grid No. 1 unless indicated otherwise.*
4. *Voltages are positive with respect to Cathode unless indicated otherwise.*
5. *Visual extinction of focused raster. For cutoff of the undeflected spot, the absolute value of the bias between cathode and grid will increase by about 5 volts.*

WARNING:

X-ray radiation shielding may be necessary to protect against possible danger of personal injury from prolonged exposure at close range if this tube is operated at higher than the manufacturer's Maximum Rated Anode Voltage or 16,000 volts, whichever is less.

OUTLINE

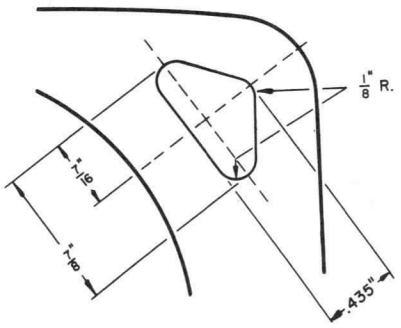

Detail of Mounting Hole

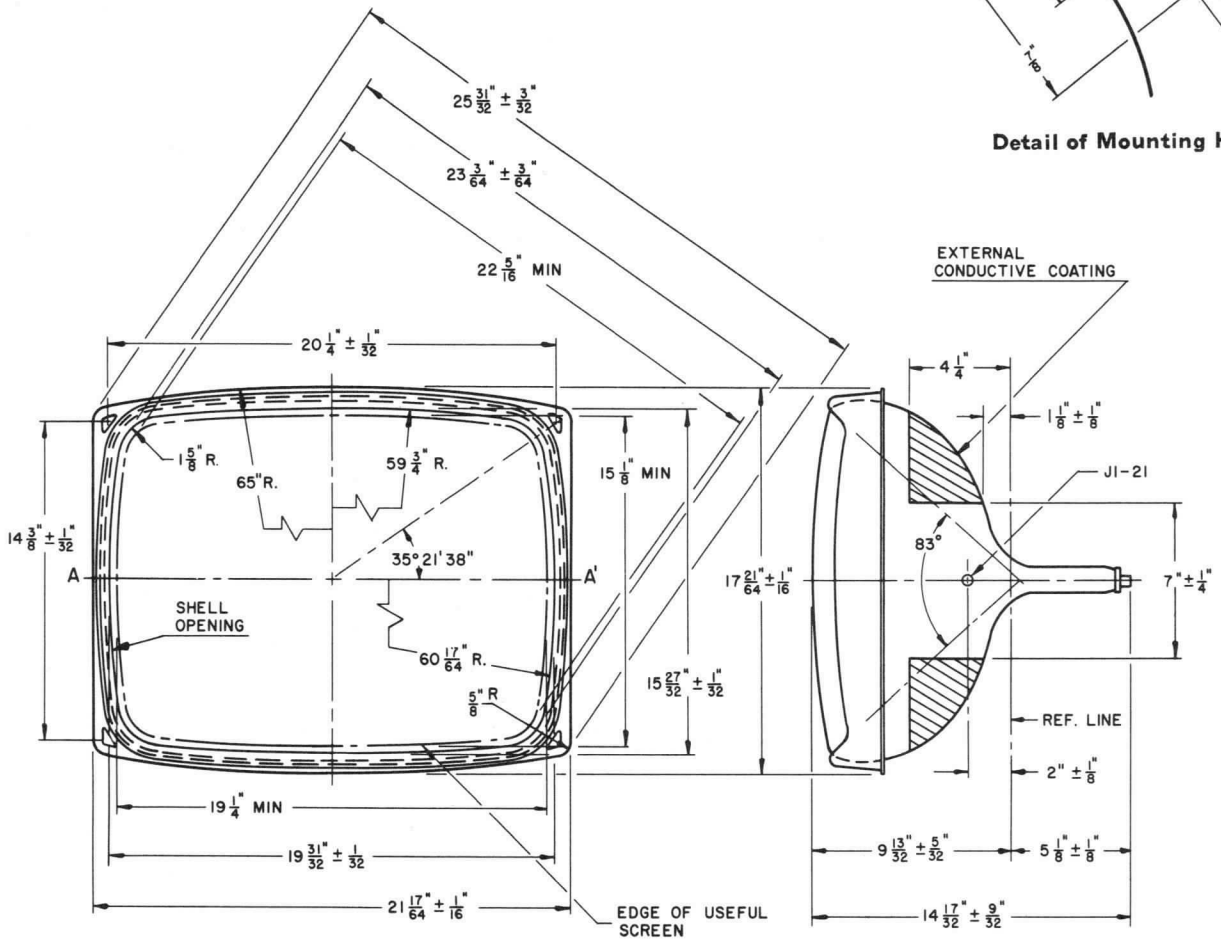

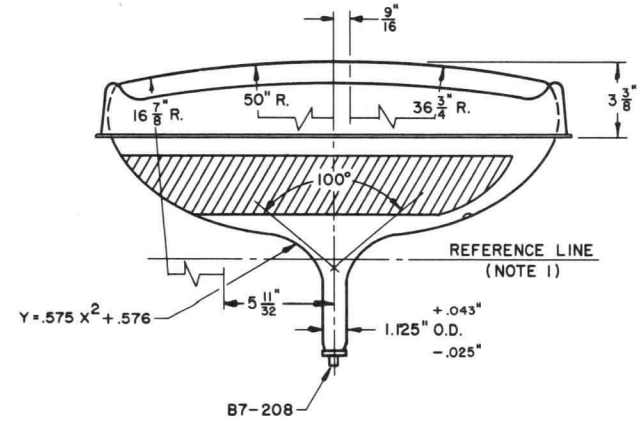

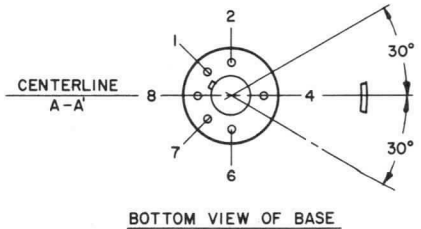

BOTTOM VIEW OF BASE (NOTE 2)

D65001

DIAGRAM NOTES:

1. *Reference Line is determined by plane C-C' of JEDEC No. 126 Reference Line Gauge, when the gauge is seated against the bulb.*
2. *Base Pin No. 4 aligns with horizontal centerline (A-A') within 30° and is on same side as anode contact, J1-21.*

CHARACTERISTICS

GENERAL DATA

Focusing Method	Electrostatic
Deflection Method	Magnetic
Deflection Angles (Approx.)	
Horizontal	99 Degrees
Diagonal	110 Degrees
Vertical	82 Degrees
Phosphor	Aluminized P4
Fluorescence	White
Persistence	Short to Medium
Faceplate	Bonded Shield
(Gray Filter Glass Safety Plate Laminated Directly to Face of Tube)	
Light Transmittance of Faceplate Assembly (Approx.)	40 Percent

ELECTRICAL DATA

Heater Voltage	6.3 Volts	
Heater Current	0.45 ± 5% Ampere	
Maximum Heater Voltage Range[1]	5.8 - 7.0 Volts	
Heater Warm-up Time[2]	11 Seconds	
Direct Interelectrode Capacitances (Approx.)		
Cathode to All Other Electrodes	5 $\mu\mu$f	
Grid No. 1 to All Other Electrodes	6 $\mu\mu$f	
External Conductive Coating to Anode[3]	2500 $\mu\mu$f	Max.
	2000 $\mu\mu$f	Min.

MECHANICAL DATA

Minimum Useful Screen Dimensions (Maximum Assured)	
Height	15¼ Inches
Width	19 5/16 Inches
Diagonal	22 5/16 Inches
Area	282 Sq. Inches
Neck Length	5⅜ Inches
Overall Length	15 7/16 Inches
Bulb	J187A1 or Equiv.
Safety Plate	FP198A1 or Equiv.
Bulb Contact (Recessed Small Cavity Cap)	J1-21
Base	B6-214
Basing	7FA
Weight (Approx.)	32½ Pounds

RATINGS

MAXIMUM RATINGS (Design Maximum Values)

Cathode Drive Service[4]

Maximum Anode Voltage	22,000 Volts	dc
Minimum Anode Voltage	15,000 Volts	dc
Grid No. 4 Voltage (Focusing Electrode)	−550 to +1100 Volts	dc
Maximum Grid No. 2 Voltage	70 Volts	dc
Minimum Grid No. 2 Voltage	44 Volts	dc
Cathode Voltage	100 Volts	dc
Peak Heater-Cathode Voltage		
Heater Negative with Respect to Cathode During Warm-up Period not to Exceed 15 Seconds	410 Volts	
After Equipment Warm-up Period	180 Volts	
Heater Positive with Respect to Cathode	180 Volts	

QUICK REFERENCE DATA

Television Picture Tube
23" Direct Viewed
Rectangular Glass Type
Spherical Faceplate
Bonded Shield
Gray Filter Glass
Aluminized Screen
Electrostatic Focus
110° Magnetic Deflection
No Ion Trap
External Conductive Coating
Low Grid No. 2 Voltage
6.3 Volt, 450 Ma Heater

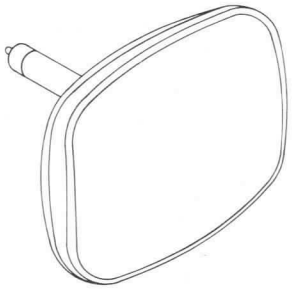

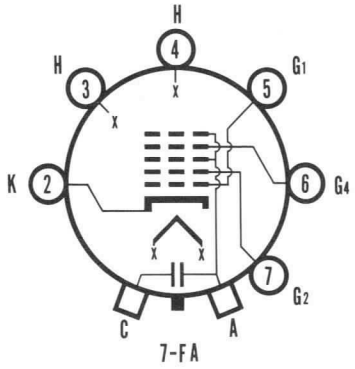

SYLVANIA
ELECTRONIC TUBES
A Division of
Sylvania Electric Products Inc.
PICTURE TUBE OPERATIONS
SENECA FALLS, NEW YORK

Prepared and Released By The
TECHNICAL PUBLICATIONS SECTION
EMPORIUM, PENNSYLVANIA

JULY, 1960

File Under
TELEVISION PICTURE TUBES

TYPICAL OPERATING CONDITIONS (Cathode Drive Service)[4]

Anode Voltage	16,000 Volts	dc
Grid No. 4 Voltage for Focus[5 & 6]	250 Volts	dc
Grid No. 2 Voltage	50 Volts	dc
Grid No. 1 Voltage Required for Cutoff[7]	+35 to +50 Volts	dc

CIRCUIT VALUES

Grid No. 1 Circuit Resistance	1.5 Megohms Max.

NOTES:

1. *Design-Maximum Values.*
2. *Heater warm-up time is defined as the time required for the voltage across the heater to reach 80% of the rated heater voltage after applying four (4) times rated heater voltage to a circuit consisting of the tube heater in series with a resistance equal to three (3) times the rated heater voltage divided by the rated heater current.*
3. *External conductive coating must be grounded.*
4. *Unless otherwise specified, voltages are positive and measured with respect to Grid No. 1.*
5. *With the combined Grid No. 1 bias voltage and video signal voltage adjusted to give an anode current of 50 μa on a $19\frac{5}{16} \times 15\frac{1}{4}$ pattern from an RCA 2F21 monoscope or equivalent.*
6. *Individual tubes will have satisfactory focus at some value between 0 and 500 volts.*
7. *Visual extinction of focused raster. Extinction of stationary focused spot will require that these values be about 5 volts more positive.*

WARNING:

X-ray radiation shielding may be necessary to protect against possible danger of personal injury from prolonged exposure at close range if this tube is operated at higher than the manufacturer's Maximum Rated Anode Voltage or 16,000 volts, whichever is less.

OUTLINE

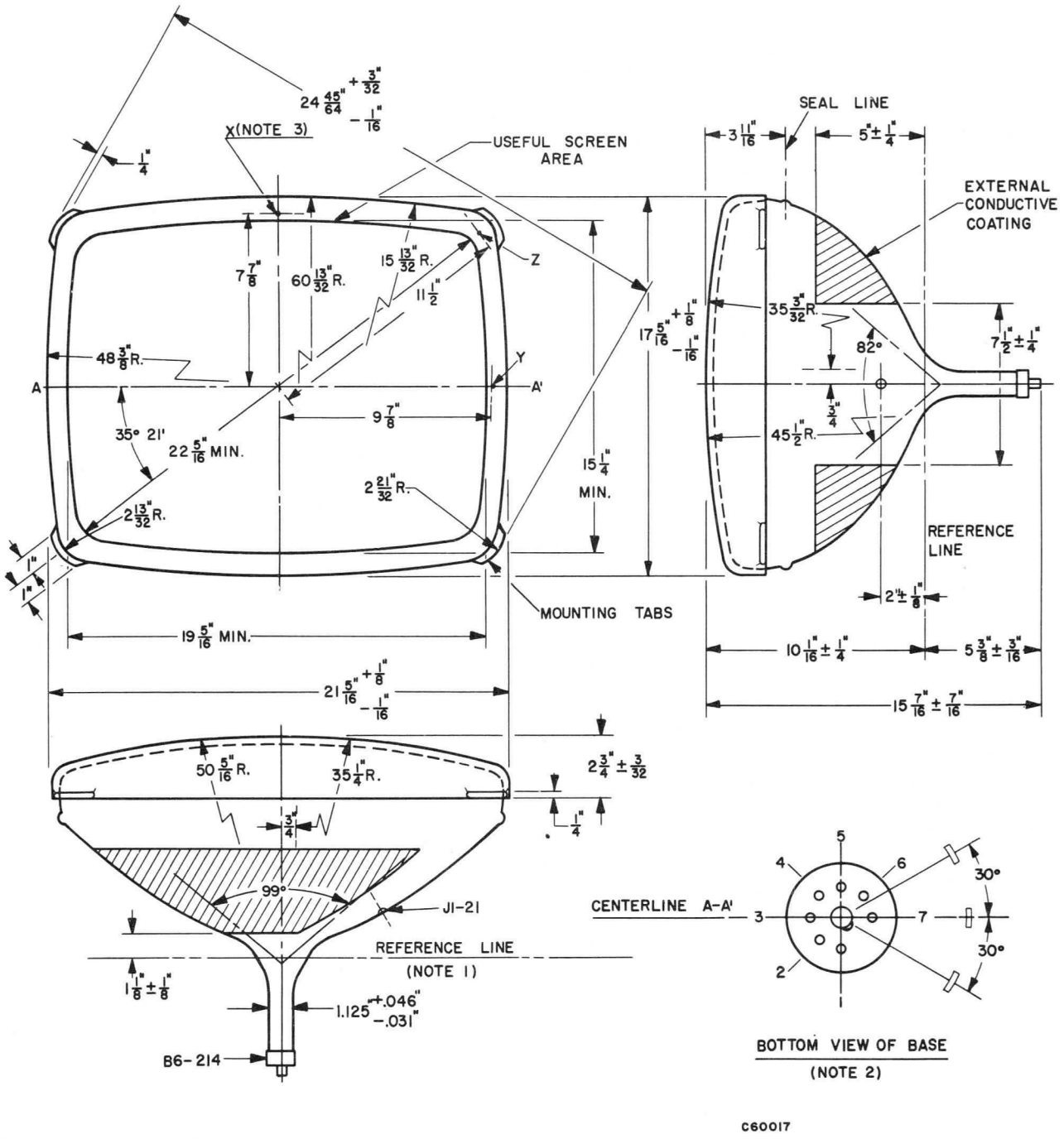

DIAGRAM NOTES:

1. *Reference line is determined by plane C-C' of JEDEC No. 126 Reference Line Gauge, when the gauge is seated against the bulb.*
2. *Base Pin No. 7 aligns with horizontal centerline (A-A') within 30° and is on same side as anode contact, J1-21.*
3. *Planes perpendicular to tube axis and passing through points X, Y, and Z are located as follows:*

   Plane tangent to crown of face to plane of X: .758" Nom.
   Plane of X to plane of Y = .463" ± .030".
   Plane of X to plane of Z = .970" ± .030".

CHARACTERISTICS

GENERAL DATA

Focusing Method	Electrostatic
Deflection Method	Magnetic
Deflection Angles (Approx.)	
Horizontal	100 Degrees
Diagonal	114 Degrees
Vertical	83 Degrees
Phosphor	Aluminized P4
Fluorescence	White
Persistence	Short to Medium
Faceplate	Gray Filter Glass
Light Transmittance (Approx.)	75 Percent

ELECTRICAL DATA

	23AMP4	23ALP4	23MP4	
Heater Voltage	6.3	6.3	6.3	Volts
Heater Current ±5%	0.30	0.45	0.60	Ampere
Heater Warm-up Time[1]	11	11	11	Seconds
Direct Interelectrode Capacitances (Approx.)				
Cathode to All Other Electrodes			5	μμf
Grid No. 1 to All Other Electrodes			6	μμf
External Conductive Coating to Anode[2]			2500	μμf Max.
			1700	μμf Min.

MECHANICAL DATA

Minimum Useful Screen Dimensions (Maximum Assured)	
Height	15 Inches
Width	19⅛ Inches
Diagonal	22-5/16 Inches
Minimum Useful Screen Area	276 Sq. Inches
Neck Length	5⅛ ± ⅛ Inches
Overall Length	14⅜ ± 5/16 Inches
Bulb Contact (Recessed Small Cavity Cap)	J1-21
Bulb	J187B1
Base	B7-208
Basing	8HR
Weight (Approx.)	26 Pounds

RATINGS

MAXIMUM RATINGS (Design Maximum Values)

Grid Drive Service[4]

Maximum Anode Voltage	22,000 Volts	dc
Minimum Anode Voltage	11,000 Volts	dc
Grid No. 4 Voltage (Focusing Electrode)	−550 to +1100 Volts	dc
Maximum Grid No. 2 Voltage	550 Volts	dc
Minimum Grid No. 2 Voltage	200 Volts	dc
Grid No. 1 Voltage		
Negative Bias Value	155 Volts	dc
Negative Peak Value	220 Volts	
Positive Bias Value	0 Volts	dc
Positive Peak Value	2 Volts	
Peak Heater-Cathode Voltage		
Heater Negative with Respect to Cathode During Warm-up Period not to Exceed 15 Seconds	450 Volts	
After Equipment Warm-up Period	200 Volts	
Heater Positive with Respect to Cathode	200 Volts	

QUICK REFERENCE DATA

Television Picture Tube
23″ Direct Viewed
Rectangular Glass Type
Spherical Faceplate
Gray Filter Glass
Aluminized Screen
Electrostatic Focus
114° Magnetic Deflection
1⅛″ Neck Diameter
No Ion Trap
External Conductive Coating

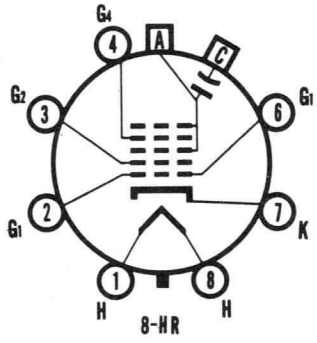

SYLVANIA
ELECTRONIC TUBES
A Division of
Sylvania Electric Products Inc.
PICTURE TUBE OPERATIONS
SENECA FALLS, NEW YORK
Prepared and Released By The
TECHNICAL PUBLICATIONS SECTION
EMPORIUM, PENNSYLVANIA
OCTOBER, 1961

File Under
TELEVISION PICTURE TUBES

MAXIMUM RATINGS (Design Maximum Values) (Continued)

Cathode Drive Service[3]

Maximum Anode Voltage	22,000 Volts	dc
Minimum Anode Voltage	11,000 Volts	dc
Grid No. 4 Voltage (Focusing Electrode)	–400 to +1250 Volts	dc
Maximum Grid No. 2 Voltage	700 Volts	dc
Minimum Grid No. 2 Voltage	300 Volts	dc
Cathode Voltage		
Positive Bias Value	155 Volts	dc
Positive Peak Value	220 Volts	
Negative Bias Value	0 Volts	dc
Negative Peak Value	2 Volts	
Peak Heater-Cathode Voltage		
Heater Negative with Respect to Cathode During		
Warm-up Period Not to Exceed 15 Seconds	450 Volts	
After Equipment Warm-up Period	200 Volts	
Heater Positive with Respect to Cathode	200 Volts	

TYPICAL OPERATING CONDITIONS

Grid Drive Service[4]

Anode Voltage	18,000 Volts	dc
Grid No. 4 Voltage for Focus	0 to 400 Volts	dc
Grid No. 2 Voltage	400 Volts	dc
Grid No. 1 Voltage Required for Cutoff[5]	–46 to –94 Volts	dc

Cathode Drive Service[3]

Anode Voltage	18,000 Volts	dc
Grid No. 4 Voltage for Focus	0 to 400 Volts	dc
Grid No. 2 Voltage	400 Volts	dc
Cathode Voltage Required for Cutoff[5]	42 to 78 Volts	dc

CIRCUIT VALUES

Grid No 1 Circuit Resistance	1.5 Megohms Max.

NOTES:

1. *Heater warm-up time is defined as the time required for the voltage across the heater to reach 80% of its rated value after applying (4) times rated heater voltage to a circuit consisting of the tube heater in series with a resistance equal to three (3) times rated heater voltage divided by rated heater current.*
2. *External conductive coating must be grounded.*
3. *Voltages are positive with respect to Grid No. 1 unless indicated otherwise.*
4. *Voltages are positive with respect to Cathode unless indicated otherwise.*
5. *Visual extinction of focused raster. For cutoff of the undeflected spot, the absolute value of the bias between cathode and grid will increase by about 5 volts.*

WARNING:

X-ray radiation shielding may be necessary to protect against possible danger of personal injury from prolonged exposure at close range if this tube is operated at higher than the manufacturer's Maximum Rated Anode Voltage or 16,000 volts, whichever is less.

OUTLINE

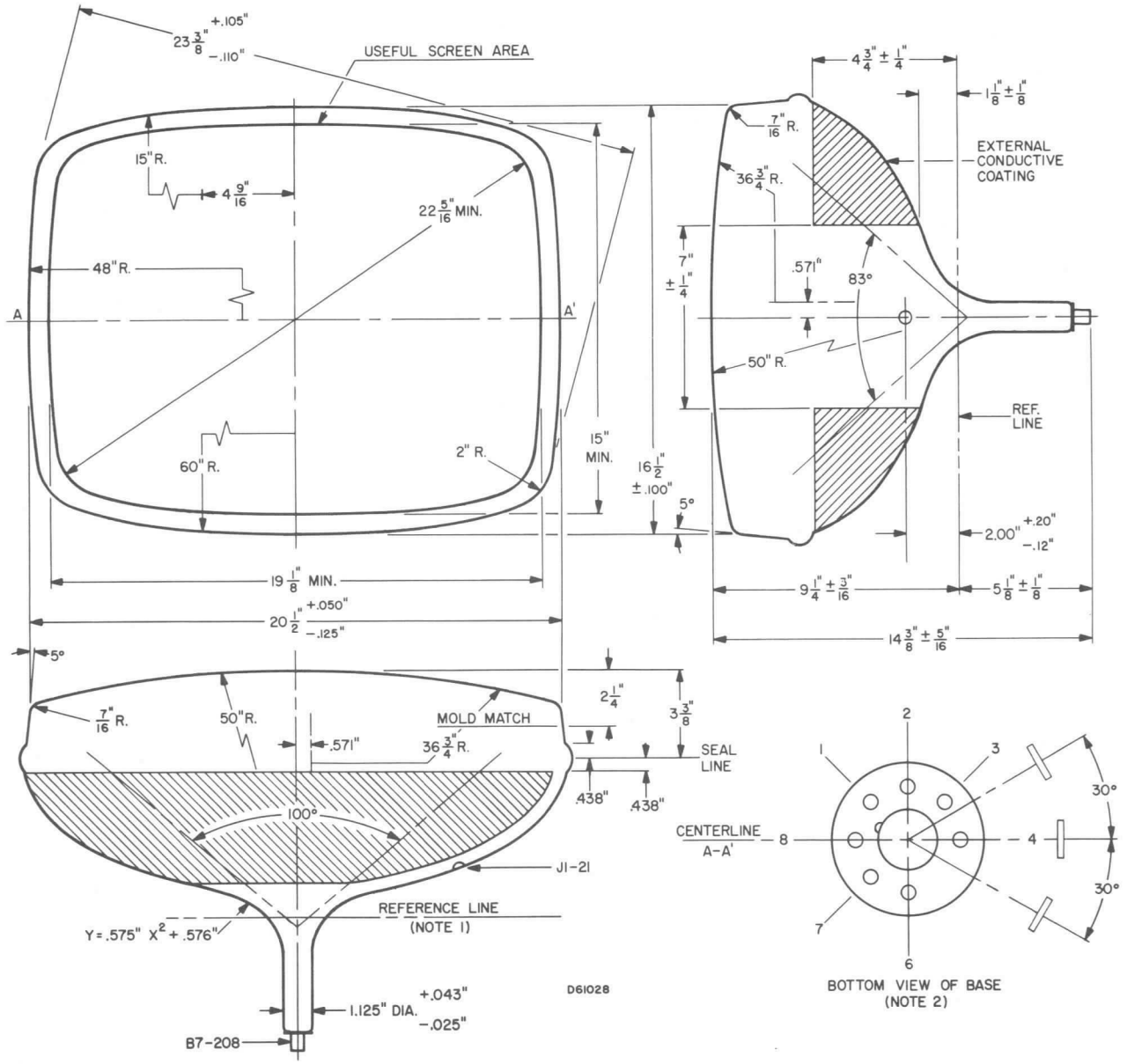

DIAGRAM NOTES:

1. *Reference line is determined by plane C-C' of JEDEC No. 126 Reference Line Gauge, when the gauge is seated against the bulb.*
2. *Base Pin No. 4 aligns with horizontal centerline (A-A') within 30° and is on same side as anode contact, J1-21.*

CHARACTERISTICS

GENERAL DATA

Focusing Method	Electrostatic
Deflection Method	Magnetic
Deflection Angles (Approx.)	
Horizontal	99 Degrees
Diagonal	110 Degrees
Vertical	82 Degrees
Phosphor	Aluminized P4
Fluorescence	White
Persistence	Short to Medium
Faceplate	Bonded Shield
(Gray Filter Glass Safety Plate Laminated Directly to Face of Tube)	
Light Transmittance of Faceplate Assembly (Approx.)	40 Percent

Type 23CBP4 has external surface of safety plate treated to reduce specular reflection.

ELECTRICAL DATA

Heater Voltage	6.3 Volts	
Heater Current	0.45 ± 5% Ampere	
Heater Warm-up Time[1]	11 Seconds	
Direct Interelectrode Capacitances (Approx.)		
Cathode to All Other Electrodes	5 $\mu\mu$f	
Grid No. 1 to All Other Electrodes	6 $\mu\mu$f	
External Conductive Coating to Anode[2]	2500 $\mu\mu$f	Max.
	2000 $\mu\mu$f	Min.

MECHANICAL DATA

Minimum Useful Screen Dimensions (Maximum Assured)	
Height	15¼ Inches
Width	19 5/16 Inches
Diagonal	22 5/16 Inches
Area	282 Sq. Inches
Neck Length	5⅛ ± ⅛ Inches
Overall Length	15 3/16 ± ⅜ Inches
Bulb	J187A
Safety Plate (23UP4, 23BQP4)	EP198A
Safety Plate (23CBP4)	FP198B
Bulb Contact (Recessed Small Cavity Cap)	J1-21
Base	B7-208
Basing	8HR
Weight	32½ Pounds

RATINGS

MAXIMUM RATINGS (Design Maximum Values)

Grid Drive Service[4]	23BQP4 23CBP4	23UP4		
Maximum Anode Voltage	23,000	18,000	Volts	dc
Minimum Anode Voltage	12,000	10,000	Volts	dc
Grid No. 4 Voltage (Focusing Electrode)	−550 to +1100		Volts	dc
Maximum Grid No. 2 Voltage	550		Volts	dc
Minimum Grid No. 2 Voltage	200		Volts	dc
Grid No. 1 Voltage				
Negative Bias Value	155		Volts	dc
Negative Peak Value	220		Volts	
Positive Bias Value	0		Volts	dc
Positive Peak Value	2		Volts	
Peak Heater-Cathode Voltage				
Heater Negative with Respect to Cathode During Warm-up Period Not to Exceed 15 Seconds	450		Volts	
After Equipment Warm-up Period	200		Volts	
Heater Positive with Respect to Cathode	200		Volts	

QUICK REFERENCE DATA

Television Picture Tube
23″ Direct Viewed
Rectangular Glass Type
Spherical Faceplate
Bonded Shield
Gray Filter Glass
Aluminized Screen
Electrostatic Focus
110 Magnetic Deflection
No Ion Trap
External Conductive Coating
6.3 Volts, 450 Ma Heater

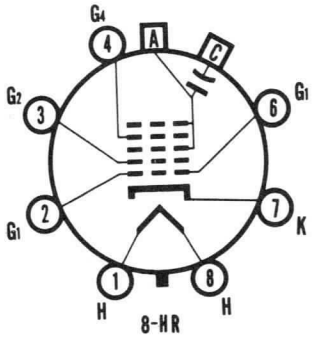

SYLVANIA
ELECTRONIC TUBES
A Division of
Sylvania Electric Products Inc.
PICTURE TUBE OPERATIONS
SENECA FALLS, NEW YORK
Prepared and Released By The
TECHNICAL PUBLICATIONS SECTION
EMPORIUM, PENNSYLVANIA
OCTOBER, 1961

File Under
TELEVISION PICTURE TUBES

MAXIMUM RATINGS (Design Maximum Values) (Continued)

Cathode Drive Service[3]	23BQP4 23CBP4	23UP4	
Maximum Anode Voltage	23,000	18,000 Volts	dc
Minimum Anode Voltage	12,000	10,000 Volts	dc
Grid No. 4 Voltage (Focusing Electrode)		−400 to +1250 Volts	dc
Grid No. 2 Voltage		700 Volts	dc
Cathode Voltage			
Positive Bias Value		155 Volts	dc
Positive Peak Value		220 Volts	
Negative Bias Value		0 Volts	dc
Negative Peak Value		2 Volts	
Peak Heater-Cathode Voltage			
Heater Negative with Respect to Cathode During			
Warm-up Period Not to Exceed 15 Seconds		450 Volts	
After Equipment Warm-up Period		200 Volts	
Heater Positive with Respect to Cathode		200 Volts	

TYPICAL OPERATING CONDITIONS

Grid Drive Service[4]		
Anode Voltage	16,000 Volts	dc
Grid No. 4 Voltage for Focus	0 to 400 Volts	dc
Grid No. 2 Voltage	400 Volts	dc
Grid No. 1 Voltage Required for Cutoff[5]	−46 to −94 Volts	dc
Cathode Drive Service[3]		
Anode Voltage	16,000 Volts	dc
Grid No. 4 Voltage for Focus	0 to 400 Volts	dc
Grid No. 2 Voltage	400 Volts	dc
Cathode Voltage Required for Cutoff[5]	42 to 78 Volts	dc

CIRCUIT VALUES

Grid No. 1 Circuit Resistance	1.5 Megohms Max.

NOTES:

1. *Heater warm-up time is defined as the time required for the voltage across the heater to reach 80% of its rated value after applying four (4) times rated heater voltage to a circuit consisting of the tube heater in series with a resistance equal to three (3) times rated heater voltage divided by rated heater current.*
2. *External conductive coating must be grounded.*
3. *Voltages are positive with respect to Grid No. 1 unless indicated otherwise.*
4. *Voltages are positive with respect to Cathode unless indicated otherwise.*
5. *Visual extinction of focused raster. For cutoff of the undeflected spot, the absolute value of the bias between cathode and grid will increase by about 5 volts.*

WARNING:

X-ray radiation shielding may be necessary to protect against possible danger of personal injury from prolonged exposure at close range if this tube is operated at higher than the manufacturer's Maximum Rated Anode Voltage or 16,000 volts, whichever is less.

OUTLINE

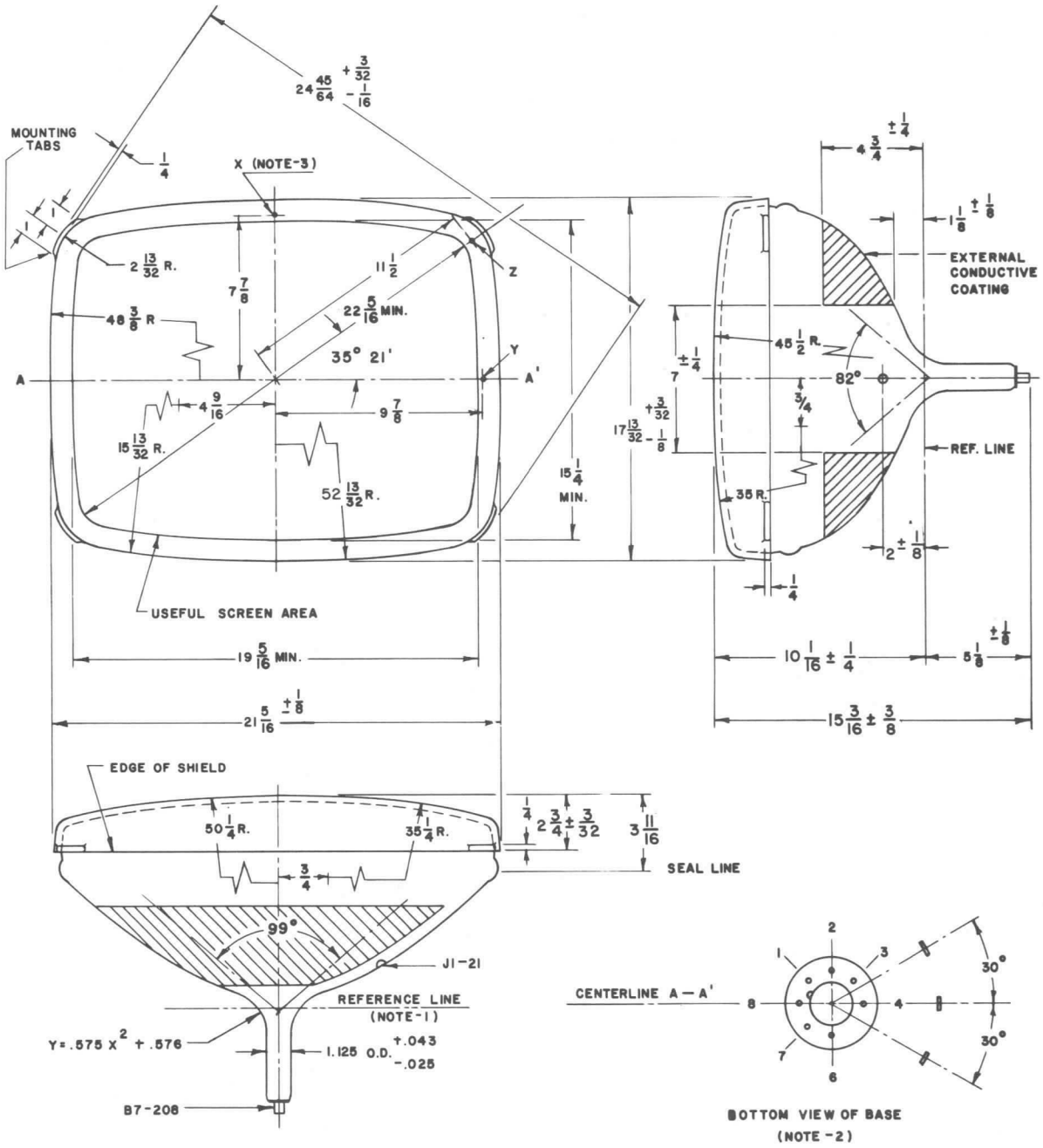

DIAGRAM NOTES:

1. *Reference line is determined by plane C-C' of JEDEC No. 126 Reference Line Gauge, when the gauge is seated against the bulb.*
2. *Base Pin No. 4 aligns with horizontal centerline (A-A') within 30° and is on same side as anode contact, J1-21.*
3. *Planes perpendicular to tube axis and passing through points X, Y, and Z are located as follows:*
   Plane tangent to crown of face to plane of X: .758" Nom.
   Plane X to plane of Y = .463" ± .030"
   Plane X to plane of Z = .970 ± .030"
4. *Dimensions are in inches.*

CHARACTERISTICS

GENERAL DATA

Focusing Method	Electrostatic
Deflection Method	Magnetic
Deflection Angles (Approx.)	
Horizontal	81 Degrees
Diagonal	92 Degrees
Vertical	66 Degrees
Phosphor	Aluminized P4
Fluorescence	White
Persistence	Short to Medium
Faceplate	Bonded Shield
(Gray Filter Glass Safety Plate Laminated Directly to Face of Tube)	
Light Transmittance of Faceplate Assembly (Approx.)	40 Percent

ELECTRICAL DATA

Heater Voltage	6.3 Volts	
Heater Current	0.60 ± 5 % Ampere	
Heater Warm-up Time[1]	11 Seconds	
Direct Interelectrode Capacitances (Approx.)		
Cathode to All Other Electrodes	5 μμf	
Grid No. 1 to All Other Electrodes	6 μμf	
External Conductive Coating to Anode[2]	2500 μμf	Max.
	2000 μμf	Min.

MECHANICAL DATA

Minimum Useful Screen Dimensions (Maximum Assured)	
Height	15 ¼ Inches
Width	19 5/16 Inches
Diagonal	22 5/16 Inches
Area	282 Sq. Inches
Neck Length	5 ½ ± 3/16 Inches
Overall Length	18 5/16 ± 7/16 Inches
Bulb	J187D or J187G
Safety Plate	
23BTP4, 23XP4, 23YP4	FP198A
23BDP4	FP198B
Bulb Contact (Recessed Small Cavity Cap)	J1-21
Base	B6-203
Basing	12L
Weight (Approx.)	34 ½ Pounds

QUICK REFERENCE DATA

Television Picture Tubes
23XP4: Low Voltage
23BDP4, 23BTP4, 23YP4: High Voltage
23″ Direct Viewed
Rectangular Glass Types
Spherical Faceplate
Bonded Shield
Gray Filter Glass
Aluminized Screen
Electrostatic Focus
92° Magnetic Deflection
No Ion Trap
External Conductive Coating
23BDP4: Anti-Reflection Treated

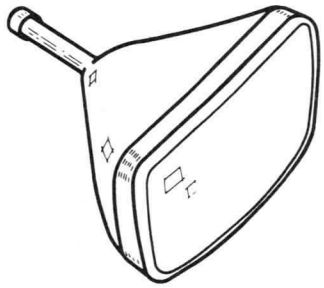

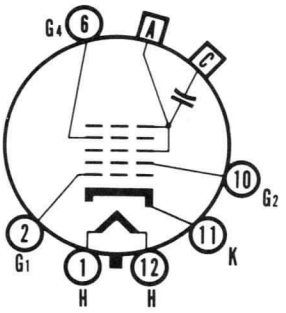

12-L

SYLVANIA
ELECTRONIC TUBES

A Division of
Sylvania Electric Products Inc.

PICTURE TUBE
OPERATIONS

SENECA FALLS, NEW YORK

Prepared and Released By The
TECHNICAL PUBLICATIONS SECTION
EMPORIUM, PENNSYLVANIA

JUNE, 1962

File Under
TELEVISION PICTURE TUBES

RATINGS

MAXIMUM RATINGS (Design Maximum Values) Grid Drive Service

	23BDP4	23BTP4	23XP4	23YP4		
Maximum Anode Voltage	22,000	25,000	18,000	22,000	Volts	dc
Minimum Anode Voltage	12,000	15,000	8,000	12,000	Volts	dc
Grid No. 4 Voltage (Focusing Electrode)				−550 to +1100	Volts	dc
Grid No. 2 Voltage	700			550	Volts	dc
Grid No. 1 Voltage						
Negative Bias Value				155	Volts	dc
Negative Peak Value				220	Volts	
Positive Bias Value				0	Volts	dc
Positive Peak Value				2	Volts	
Peak Heater-Cathode Voltage						
Heater Negative with Respect to Cathode						
During Warm-up Period Not to Exceed 15 Seconds				450	Volts	
After Equipment Warm-up Period				200	Volts	
Heater Positive with Respect to Cathode				200	Volts	

TYPICAL OPERATING CONDITIONS

	23BDP4 Cathode Drive Service[4]	23BTP4, 23XP4, 23YP4 Grid Drive Service		
Anode Voltage	16,000	16,000	Volts	dc
Grid No. 4 Voltage for Focus	0 to 400	0 to +400	Volts	dc
Grid No. 2 Voltage	500	300	Volts	dc
Grid No. 1 Voltage Required for Cutoff[3]		−35 to −72	Volts	dc
Cathode Voltage required for Cutoff[3]	45 to 95		Volts	dc

CIRCUIT VALUES

Grid No. 1 Circuit Resistance	1.5 Megohms Max.

NOTES:

1. *Heater warm-up time is defined as the time required for the voltage across the heater to reach 80 % of the rated heater voltage after applying four (4) times rated heater voltage to a circuit consisting of the tube heater in series with a resistance equal to three (3) times the rated heater voltage divided by the rated heater current.*
2. *External conductive coating must be grounded.*
3. *Visual extinction of focused raster. Extinction of stationary focused spot will require that these values be increased about 5 volts.*
4. *Voltages shown are positive with respect to Grid No. 1.*

WARNING:

X-ray radiation shielding may be necessary to protect against possible danger of personal injury from prolonged exposure at close range if this tube is operated at higher than the manufacturer's Maximum Rated Anode Voltage or 16,000 volts, whichever is less.

OUTLINE

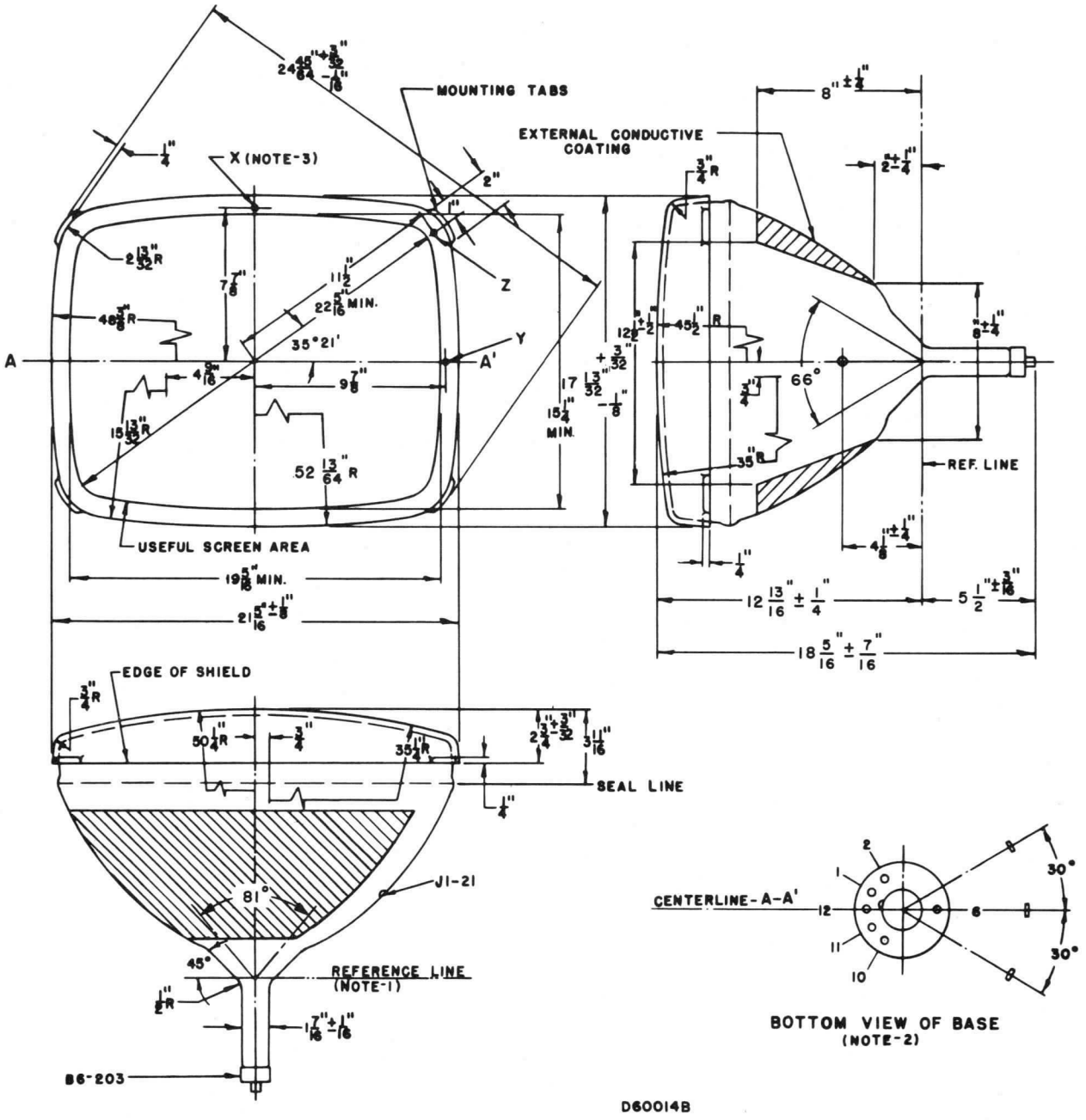

DIAGRAM NOTES:

1. *Reference line is determined by plane C-C' of JEDEC No. 116 Reference Line Gauge, when the gauge is seated against the bulb.*
2. *Base Pin No. 6 aligns with horizontal centerline (A-A') within 30° and is on same side as anode contact, J1-21.*
3. *Planes perpendicular to tube axis and passing through points X, Y and Z are located as follows:*
   Plane tangent to crown of face to plane of X: .758" Nom.
   Plane of X to plane of Y = .463" ± .030".
   Plane of X to plane of Z = .970" ± .030".

SYLVANIA

engineering data service

SYLVANIA

24AJP4

CHARACTERISTICS

GENERAL DATA

Focusing Method	Electrostatic
Deflection Method	Magnetic
Deflection Angles (approx.)	
Horizontal	85 Degrees
Diagonal	90 Degrees
Phosphor	Aluminized P4
Fluorescence	White
Persistence	Short to Medium
Faceplate	Gray Filter Glass
Light Transmittance (approx.)	74 Percent

ELECTRICAL DATA

Heater Voltage	6.3 Volts	
Heater Current	0.6 ± 5% Ampere	
Heater Warm-up Time[1]	11 Seconds	
Direct Interelectrode Capacitances (approx.)		
Cathode to All Other Electrodes	5 μμf	
Grid No. 1 to All Other Electrodes	6 μμf	
External Conductive Coating to Anode[2]	2500 μμf	Max.
	2000 μμf	Min.

MECHANICAL DATA

Minimum Useful Screen Dimensions (Maximum Assured)	
Height	16 7/8
Width	21 7/16
Diagonal	22 13/16
Minimum Useful Screen Area	332 Sq. Inches
Bulb	J192A or J192B
Bulb Contact (Recessed Small Cavity Cap)	J1-21
Base (Small Shell Duodecal 6-Pin)	B6-63
Basing	12L

RATINGS

MAXIMUM RATINGS (Absolute Maximum Values)[3]

Anode Voltage	22000 Volts	dc
Grid No. 4 Voltage (Focusing Electrode)	−550 to +1100 Volts	dc
Grid No. 2 Voltage	70 Volts	dc
Cathode Voltage		
Positive Bias Value	150 Volts	dc
Negative Peak Value	0 Volts	
Peak Heater-Cathode Voltage		
Heater Negative with Respect to Cathode		
During Warm-up Period		
Not to Exceed 15 Seconds	450 Volts	
After Equipment Warm-up Period	200 Volts	
Heater Positive with Respect to Cathode	200 Volts	

TYPICAL OPERATING CONDITIONS (Cathode Drive Service)[3]

Anode Voltage	18,000 Volts	dc
Grid No. 4 Voltage for Focus	0 to 350 Volts	dc
Grid No. 2 Voltage	50 Volts	dc
Cathode Voltage for Cutoff[4]	35 to 50 Volts	dc

CIRCUIT VALUES

Grid No. 1 Circuit Resistance	1.5 Megohms Max.

QUICK REFERENCE DATA

Television Picture Tube
24" Direct Viewed
Rectangular Glass Type
Spherical Faceplate
Gray Filter Glass
Aluminized Screen
Electrostatic Focus
90° Magnetic Deflection
Cathode Drive Design
Low Grid No. 2 Voltage
No Ion Trap
Short Neck Tube
External Conductive Coating

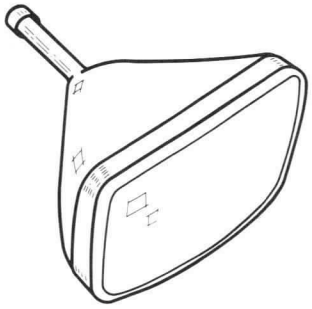

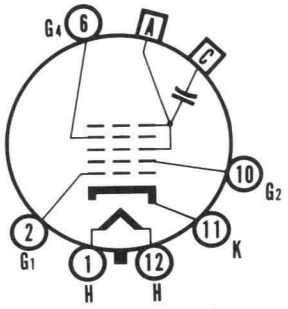

12-L

SYLVANIA ELECTRIC PRODUCTS INC.

TELEVISION PICTURE TUBE DIVISION
SENECA FALLS, NEW YORK

Prepared and Released By The
TECHNICAL PUBLICATIONS SECTION
EMPORIUM, PENNSYLVANIA
DECEMBER, 1957

NOTES:

1. *Heater warm-up time is defined as the time required for the voltage across the heater to reach 80% of its rated value after applying four times rated heater voltage to a circuit consisting of the tube heater in series with a resistance equal to three (3) times rated heater voltage divided by rated heater current.*
2. *External conductive coating must be grounded.*
3. *This type is designed for cathode-drive service. Voltages shown are positive with respect to Grid No. 1 Voltage unless otherwise indicated.*
4. *For visual extinction of the undeflected focused spot.*

WARNING:

X-ray radiation shielding may be necessary to protect against possible danger of personal injury from prolonged exposure at close range if this tube is operated at higher than the manufacturer's Maximum Rated Anode Voltage or 16,000 volts, whichever is less.

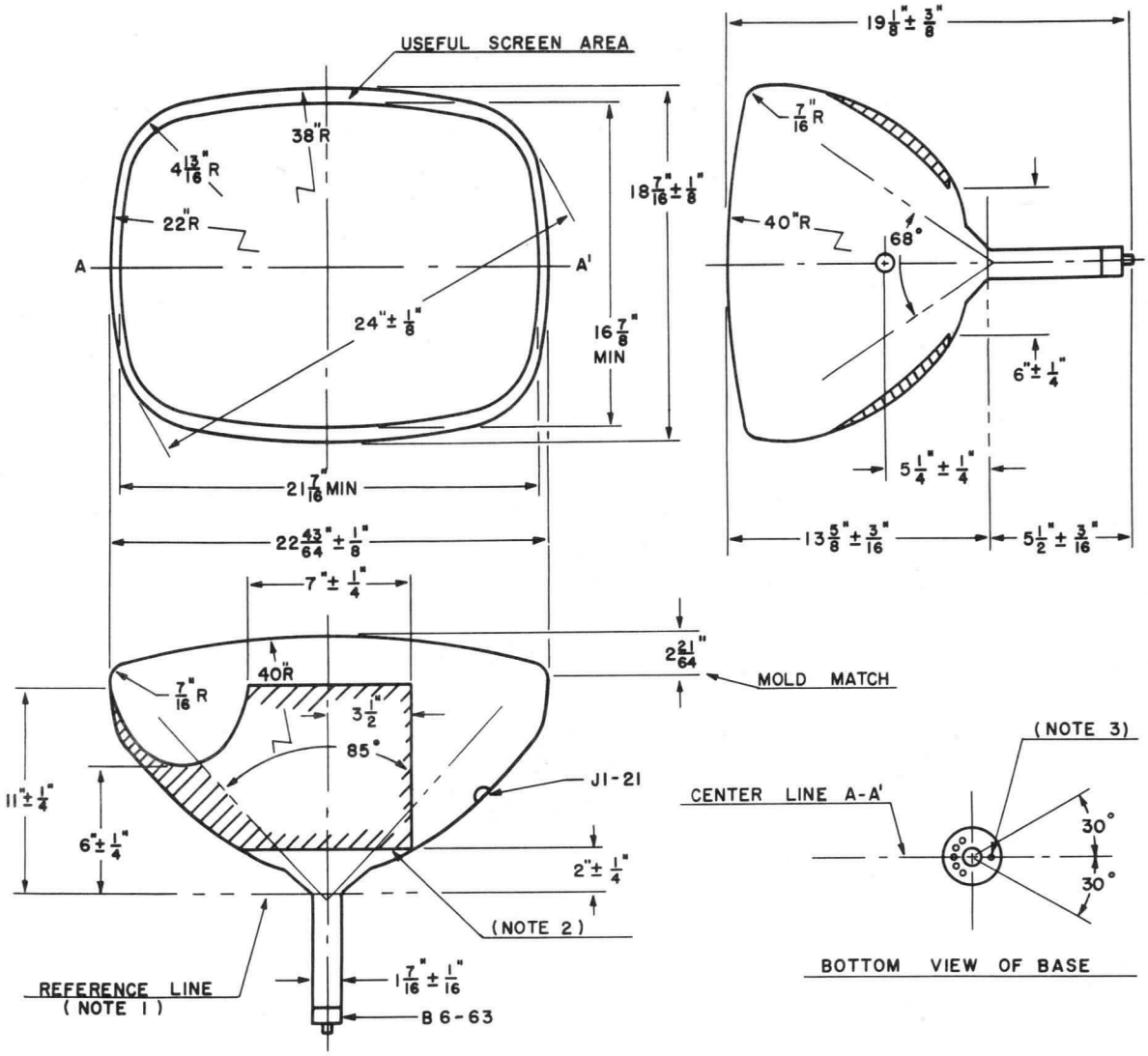

DIAGRAM NOTES:

1. *Reference line is determined by the plane C-C' of the reference line gauge (JETEC No. 116) when the gauge is seated on the glass cone.*
2. *External conductive coating. Coating extends to near mold match line as dimensioned, on both long sides of bulb and on the short side opposite the anode contact.*
3. *Pin No. 6 aligns with horizontal centerline of tube, within 30°, and is on same side as anode contact.*

A Technical Publication of

SYLVANIA ELECTRIC
PRODUCTS INC.

EMPORIUM, PA.

CHARACTERISTICS

GENERAL DATA

Focusing Method	Electrostatic
Deflection Method	Magnetic
Deflection Angles (approx.)	
Horizontal	105 Degrees
Diagonal	110 Degrees
Vertical	87 Degrees
Phosphor	Aluminized P4
Fluorescence	White
Persistence	Short to Medium
Faceplate	Gray Filter Glass
Light Transmittance (approx.)	74 Percent

ELECTRICAL DATA

Heater Voltage	6.3 Volts	
Heater Current	0.6 ± 5% Ampere	
Heater Warm-up Time[1]	11 Seconds	
Direct Interelectrode Capacitances (approx.)		
Cathode to All Other Electrodes	5 μμf	
Grid No. 1 to All Other Electrodes	6 μμf	
External Conductive Coating to Anode[2]	2500 μμf	Max.
	2000 μμf	Min.

MECHANICAL DATA

Minimum Useful Screen Dimensions (Maximum Assured)	
Height	16 7/8 Inches
Width	21 7/16 Inches
Diagonal	22 13/16 Inches
Area	332 Sq. Inches
Bulb	J192C1 or Equivalent
Bulb Contact (Recessed Small Cavity Cap)	J1-21
Base	B6-185
Basing	7FA
Weight (approx.)	26 1/2 Pounds

RATINGS

MAXIMUM RATINGS (Absolute Maximum Values)

Anode Voltage	22,000 Volts	dc
Grid No. 4 Voltage (Focusing Electrode)	−550 to +1100 Volts	dc
Grid No. 2 Voltage	550 Volts	dc
Grid No. 1 Voltage		
Negative Bias Value	154 Volts	dc
Negative Peak Value	220 Volts	
Positive Bias Value	0 Volts	dc
Positive Peak Value	2 Volts	
Peak Heater-Cathode Voltage		
Heater Negative with Respect to Cathode During Warm-up Period Not to Exceed 15 Seconds	450 Volts	
After Equipment Warm-up Period	200 Volts	
Heater Positive with Respect to Cathode	200 Volts	

TYPICAL OPERATING CONDITIONS

Anode Voltage	16,000 Volts	dc
Grid No. 4 Voltage for Focus	0 to +400 Volts	dc
Grid No. 2 Voltage	300 Volts	dc
Grid No. 1 Voltage Required for Cutoff[3]	−35 to −72 Volts	dc

CIRCUIT VALUES

Grid No. 1 Circuit Resistance	1.5 Megohms Max.

QUICK REFERENCE DATA

Television Picture Tube
24" Direct Viewed
Rectangular Glass Type
Lightweight Tube
Spherical Faceplate
Gray Filter Glass
Aluminized Screen
Electrostatic Focus
110° Magnetic Deflection
1⅛" Neck Diameter
No Ion Trap
External Conductive Coating

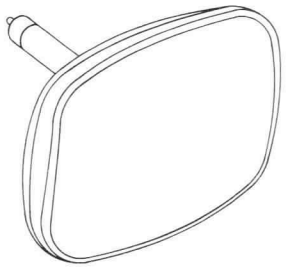

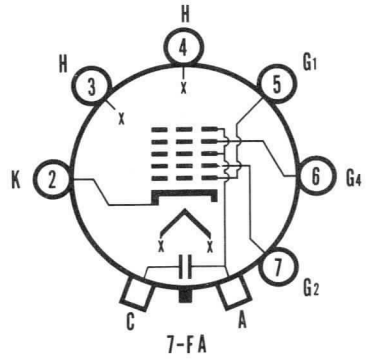

SYLVANIA ELECTRIC PRODUCTS INC.
TELEVISION PICTURE TUBE DIVISION
SENECA FALLS, NEW YORK

Prepared and Released By The TECHNICAL PUBLICATIONS SECTION EMPORIUM, PENNSYLVANIA
NOVEMBER, 1957

NOTES:

1. *Heater warm-up time is defined as the time required for the voltage across the heater to reach 80% of its rated value after applying four (4) times rated heater voltage to a circuit consisting of the tube heater in series with a resistance equal to three (3) times rated heater voltage divided by rated heater current.*
2. *External conductive coating must be grounded.*
3. *Visual extinction of focused raster. Extinction of stationary focused spot will require that these values be about 5 volts more negative.*

WARNING:

X-ray radiation shielding may be necessary to protect against possible danger of personal injury from prolonged exposure at close range if this tube is operated at higher than the manufacturer's Maximum Rated Anode Voltage or 16,000 volts, whichever is less.

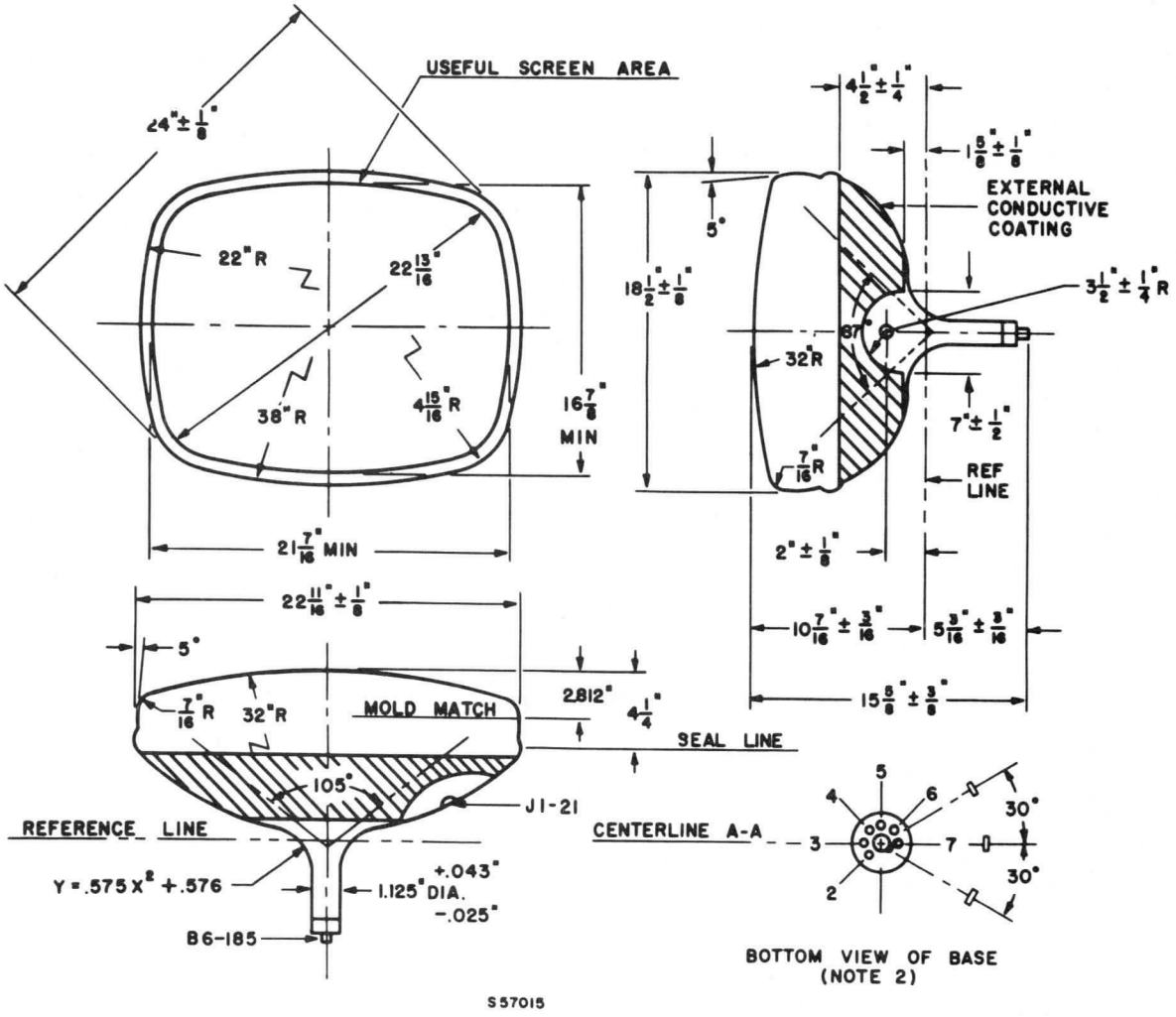

DIAGRAM NOTES:

1. *Reference line is determined by plane C-C of JETEC No. 126 Reference Line Gauge, when the gauge is seated against the bulb.*
2. *Base pin No. 7 aligns with horizontal centerline within 30°, and is on same side as anode contact (J1-21).*

CHARACTERISTICS

GENERAL DATA

Focusing Method	Electrostatic
Deflecting Method	Magnetic
Deflection Angle	
Horizontal	85 Degrees
Diagonal	90 Degrees
Phosphor	Aluminized P4
Fluorescence	White
Persistence	Short to Medium
Faceplate	Gray Filter Glass
Light Transmittance (approx.)	74 Percent

ELECTRICAL DATA

Heater Voltage	6.3 Volts
Heater Current	0.6 ± 5% Ampere
Heater Warm-up Time[1]	11 Seconds
Direct Interelectrode Capacitances (approx.)	
Cathode to All Other Electrodes	5 $\mu\mu$f
Grid No. 1 to All Other Electrodes	6 $\mu\mu$f
External Conductive Coating to Anode[2]	2500 $\mu\mu$f Max.
	1700 $\mu\mu$f Min.
Ion Trap Magnet	External, Single Field Type

MECHANICAL DATA

Minimum Useful Screen Dimensions	$21\frac{7}{16}$" x $16\frac{7}{8}$" Inches
Minimum Useful Screen Area	332 Sq. Inches
Bulb	J192A or J192B
Bulb Contact (Recessed Small Cavity Cap)	J1-21
Base (Small Shell Duodecal 6-Pin)	B6-63
Basing	12L

RATINGS

MAXIMUM RATINGS (Absolute Maximum Values)

Anode Voltage	22,000 Volts dc
Grid No. 4 Voltage (Focusing Electrode)	—550 to +1100 Volts dc
Grid No. 2 Voltage	550 Volts dc
Grid No. 1 Voltage	
Negative Bias Value	155 Volts dc
Negative Peak Value	220 Volts
Positive Bias Value	0 Volts dc
Positive Peak Value	2 Volts
Peak Heater-Cathode Voltage	
Heater Negative with Respect to Cathode	
During Warm-up Period not to Exceed 15 Seconds	450 Volts
After Equipment Warm-up Period	200 Volts
Heater Positive with Respect to Cathode	200 Volts

TYPICAL OPERATING CONDITIONS

Anode Voltage	18,000 Volts dc
Grid No. 4 Voltage	—72 to +396 Volts dc
Grid No. 2 Voltage	300 Volts dc
Grid No. 1 Voltage Required for Cutoff[3]	—35 to —72 Volts dc
Ion Trap Magnet Current (Average)[4]	33 Ma dc
Field Strength of PM Ion Trap Magnet[5]	37 Gausses Min.

CIRCUIT VALUES

Grid No. 1 Circuit Resistance	1.5 Megohms Max.

QUICK REFERENCE DATA

Television Picture Tube
24" Direct Viewed
Rectangular Glass Type
Spherical Faceplate
Gray Filter Glass
Magnetic Deflection
Electrostatic Focus
Single Field Ion Trap
External Conductive Coating
Aluminized Screen

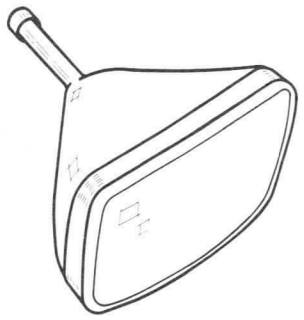

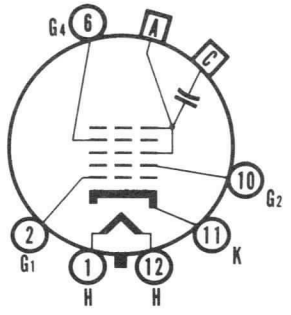

12-L

SYLVANIA ELECTRIC PRODUCTS INC.
TELEVISION PICTURE TUBE DIVISION
SENECA FALLS, NEW YORK

Prepared and Released By The TECHNICAL PUBLICATIONS SECTION EMPORIUM, PENNSYLVANIA
APRIL, 1958

NOTES:

1. *Heater warm-up time is defined as the time required for the voltage across the heater to reach 80% of its rated value after applying four (4) times rated heater voltage to a circuit consisting of the tube heater in series with a resistance equal to three (3) times rated heater voltage divided by rated heater current.*
2. *External conductive coating must be grounded.*
3. *Visual extinction of focused raster. Extinction of stationary focused spot will require that these values be about 5 volts more negative.*
4. *For JETEC Ion Trap Magnet No. 117 with pole pieces centered over Grid No. 2 on mount and rotated for maximum brightness.*
5. *For typical PM ion trap magnet with field strength tolerance of ±3 gausses.*

WARNING:

X-ray radiation shielding may be necessary to protect against possible danger of personal injury from prolonged exposure at close range if this tube is operated at higher than the manufacturer's Maximum Rated Anode Voltage or 16,000 volts, whichever is less.

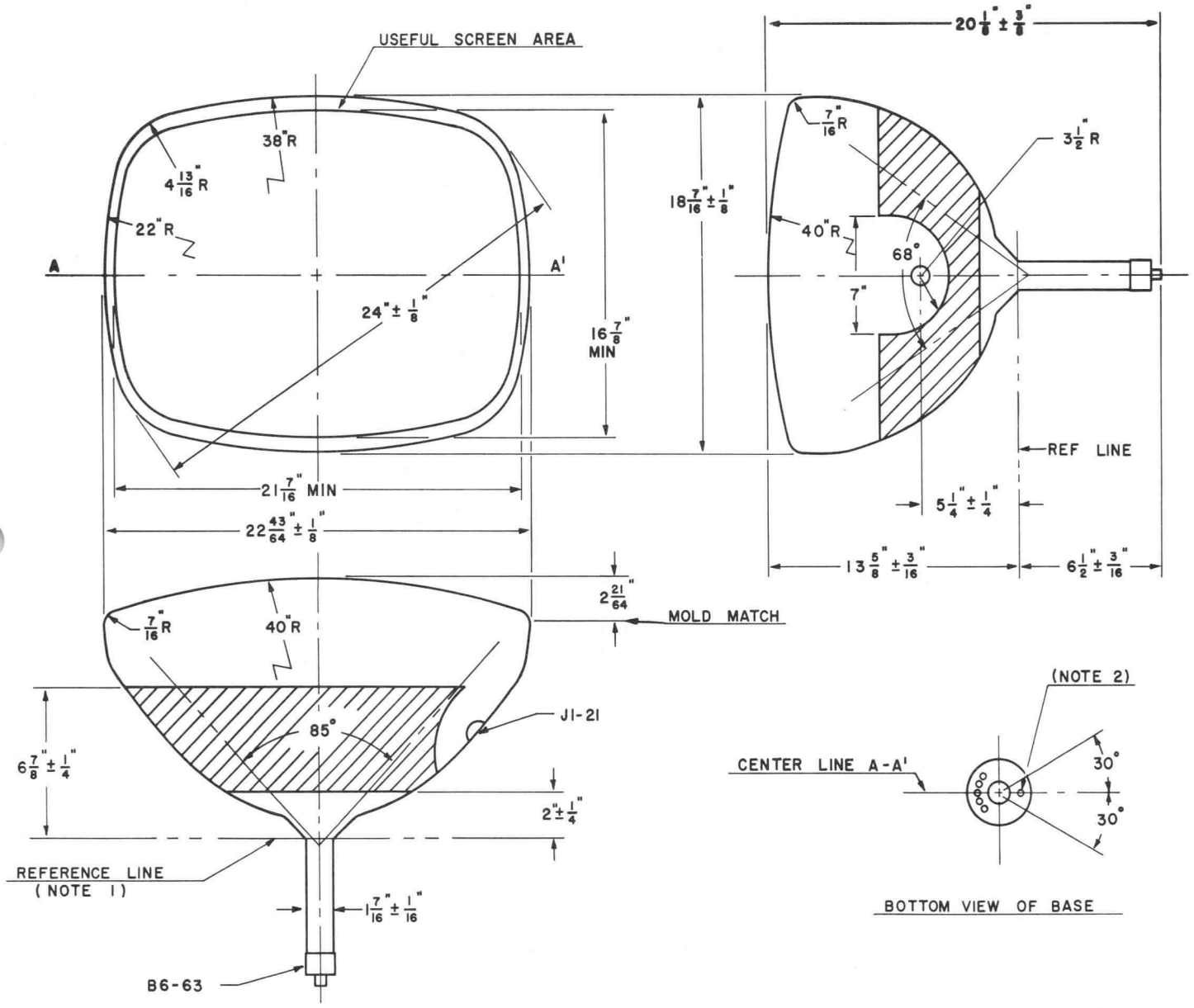

S57027A

DIAGRAM NOTES:

1. *Reference line is determined by the plane C-C' of the reference line gauge (JETEC No. 116) when the gauge is resting on the glass cone.*
2. *Pin No. 6 aligns with horizontal centerline of tube within 30° and is on same side as anode contact.*

A Technical Publication of

SYLVANIA ELECTRIC
PRODUCTS INC.

EMPORIUM, PA.

CHARACTERISTICS

GENERAL DATA

Focusing Method	Electrostatic	
Deflection Method	Magnetic	
Deflection Angles (approx.)		
Horizontal	105	Degrees
Diagonal	110	Degrees
Vertical	87	Degrees
Phosphor	Aluminized P4	
Fluorescence	White	
Persistence	Short to Medium	
Faceplate	Gray Filter Glass	
Light Transmittance (approx.)	76	Percent

ELECTRICAL DATA

Heater Voltage	6.3	Volts
Heater Current	0.45 ± 5%	Ampere
Heater Warm-up Time[1]	11	Seconds
Direct Interelectrode Capacitances (approx.)		
Cathode to All Other Electrodes	5	μμf
Grid No. 1 to All Other Electrodes	6	μμf
External Conductive Coating to Anode[2]	2500	μμf Max.
	1700	μμf Min.

MECHANICAL DATA

Minimum Useful Screen Dimensions (Maximum Assured)		
Height	16 7/8	Inches
Width	21-7/16	Inches
Diagonal	22-13/16	Inches
Area	332	Sq. Inches
Bulb	J192C or J192D	
Bulb Contact (Recessed Small Cavity Cap)	J1-21	
Base	B7-183	
Basing	8HR	
Weight (approx.)	26 1/2	Pounds

RATINGS

MAXIMUM RATINGS (Absolute Maximum Values)

Anode Voltage	22,000 Volts	dc
Grid No. 4 Voltage (Focusing Electrode)	−550 to +1100 Volts	dc
Grid No. 2 Voltage	550 Volts	dc
Grid No. 1 Voltage		
Negative Bias Value	154 Volts	dc
Negative Peak Value	220 Volts	
Positive Bias Value	0 Volts	dc
Positive Peak Value	2 Volts	
Peak Heater-Cathode Voltage		
Heater Negative with Respect to Cathode		
During Warm-up Period Not to Exceed 15 Seconds	450 Volts	
After Equipment Warm-up Period	200 Volts	
Heater Positive with Respect to Cathode	200 Volts	

QUICK REFERENCE DATA

Television Picture Tube
24" Direct Viewed
Rectangular Glass Type
Lightweight Tube
Spherical Faceplate
Gray Filter Glass
Aluminized Screen
Electrostatic Focus
110° Magnetic Deflection
1 1/8" Neck Diameter
No Ion Trap
External Conductive Coating
6.3 Volt, 450 Ma. Heater

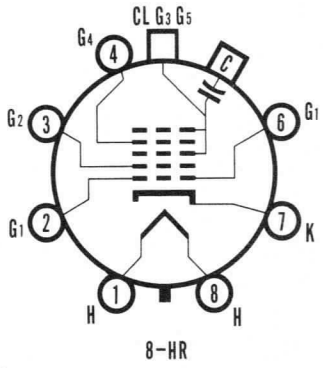

8-HR

SYLVANIA ELECTRIC PRODUCTS INC.

TELEVISION PICTURE TUBE DIVISION

SENECA FALLS, NEW YORK

Prepared and Released By The TECHNICAL PUBLICATIONS SECTION EMPORIUM, PENNSYLVANIA

SEPTEMBER, 1958

TYPICAL OPERATING CONDITIONS

Anode Voltage	16,000 Volts	dc
Grid No. 4 Voltage for Focus	0 to +400 Volts	dc
Grid No. 2 Voltage	300 Volts	dc
Grid No. 1 Voltage Required for Cutoff[3]	−35 to −72 Volts	dc

CIRCUIT VALUES

Grid No. 1 Circuit Resistance	1.5 Megohms Max.

NOTES:

1. *Heater warm-up time is defined as the time required for the voltage across the heater to reach 80% of its rated value after applying four (4) times rated heater voltage to a circuit consisting of the tube heater in series with a resistance equal to three (3) times rated heater voltage divided by rated heater current.*
2. *External conductive coating must be grounded.*
3. *Visual extinction of focused raster. Extinction of stationary focused spot will require that these values be about 5 volts more negative.*

WARNING:

X-ray radiation shielding may be necessary to protect against possible danger of personal injury from prolonged exposure at close range if this tube is operated at higher than the manufacturer's Maximum Rated Anode Voltage or 16,000 volts, whichever is less.

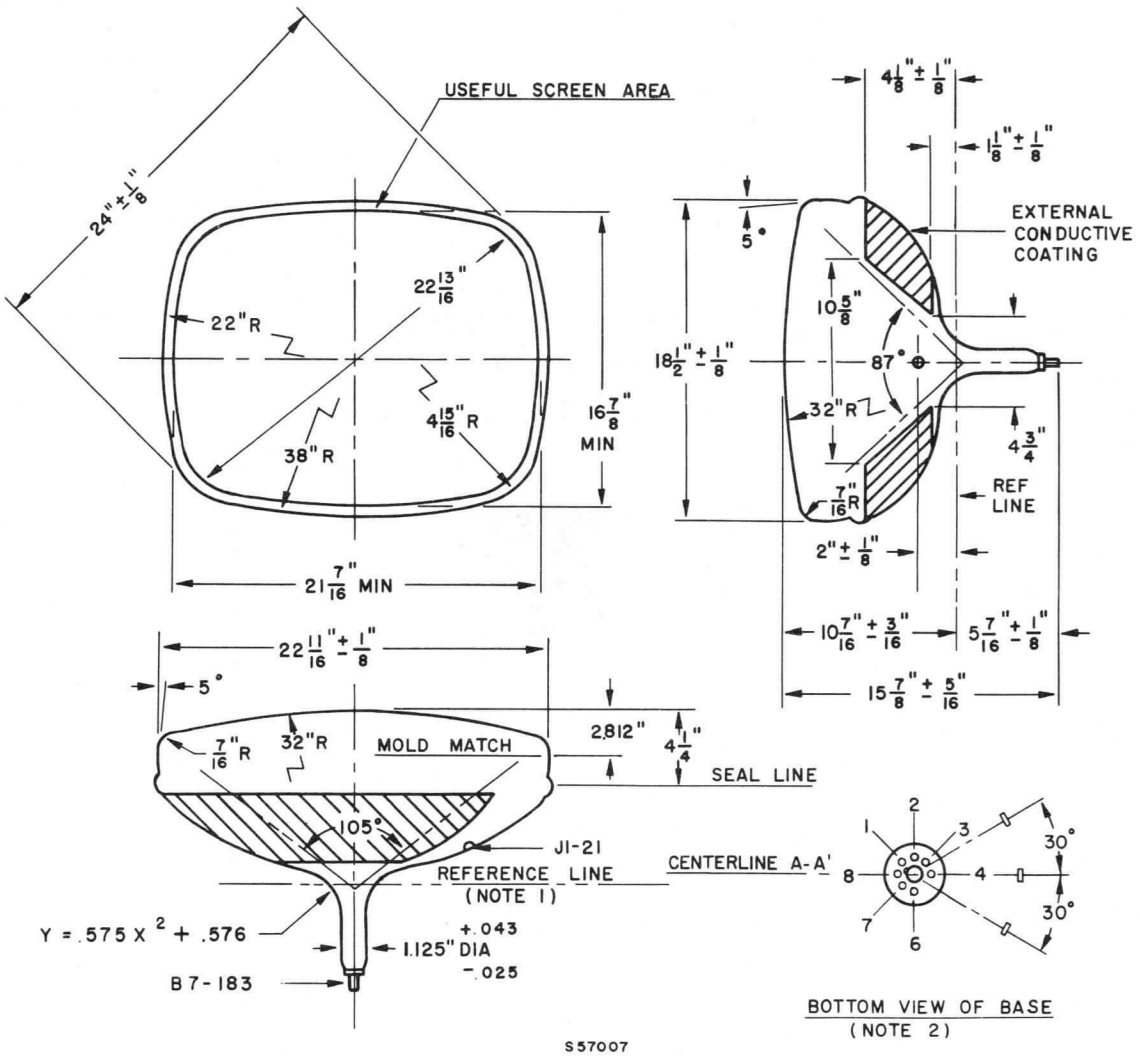

DIAGRAM NOTES:

1. *Reference line is determined by plane C-C' of JETEC No. 126 Reference Line Gauge, when the gauge is seated against the bulb.*
2. *Base pin No. 4 aligns with horizontal centerline within 30°, and is on same side as anode contact (J1-21).*

A Technical Publication of
SYLVANIA ELECTRIC
PRODUCTS INC.
EMPORIUM, PA.

SYLVANIA

engineering data service

SYLVANIA
24CP4
24CP4A

CHARACTERISTICS

GENERAL DATA

Focusing Method	Magnetic
Deflecting Method	Magnetic
Deflection Angle (approx.)	
Horizontal	85 Degrees
Diagonal	90 Degrees
Phosphor	P4
Fluorescence	White
Persistence	Medium
Faceplate	Gray Filter Glass
Light Transmittance (approx.)	68 Percent

ELECTRICAL DATA

Heater Voltage	6.3 Volts
Heater Current (approx.)	0.6 Ampere
Direct Interelectrode Capacitances (approx.)	
Cathode to All Other Electrodes	5 $\mu\mu$f
Grid No. 1 to All Other Electrodes	6 $\mu\mu$f
External Conductive Coating to Anode[1]	750 $\mu\mu$f Max.
	500 $\mu\mu$f Min.
Ion Trap Magnet	External, Single Field Type

MECHANICAL DATA

Minimum Useful Screen Dimensions	21¼ x 16¾ Inches
Bulb Contact (Recessed Small Cavity Cap)	J1-21
Base (Small Shell Duodecal 5-Pin)	B5-57
Basing	12N

RATINGS

MAXIMUM RATINGS (Design Center Values)

Anode Voltage	20,000 Volts dc
Grid No. 2 Voltage	500 Volts dc
Grid No. 1 Voltage	
Negative Bias Value	125 Volts dc
Positive Bias Value	0 Volts dc
Positive Peak Value	2 Volts
Peak Heater-Cathode Voltage	
Heater Negative with Respect to Cathode	
During Warm-up Period Not to Exceed 15 Seconds	410 Volts
After Equipment Warm-up Period	180 Volts
Heater Positive with Respect to Cathode	180 Volts

RECOMMENDED OPERATING CONDITIONS

Anode Voltage	18,000 Volts dc
Grid No. 2 Voltage	300 Volts dc
Grid No. 1 Voltage Required for Cutoff[2]	-28 to -72 Volts dc
Focusing Coil Current[3]	125 ± 20% Ma dc
Ion Trap Magnet Strength (approx.)	40 Gausses

CIRCUIT VALUES

Grid No. 1 Circuit Resistance	1.5 Megohms Max.

NOTES:

1. *External Conductive Coating must be grounded.*
2. *Visual extinction of focused raster. Extinction of stationary focused spot will require that these values be about 5 volts more negative.*
3. *For JETEC focusing coil 109 or equivalent three inches from reference line, bias adjusted to 30 foot lamberts on a 21¼ x 15¾ inch picture area sharply focused at center of screen.*

QUICK REFERENCE DATA

Television Picture Tube
24" Direct Viewed
Rectangular Glass Type
Spherical Faceplate
Gray Filter Glass
Magnetic Deflection
Magnetic Focus
Single Field Ion Trap
External Conductive Coating
(24CP4A has an Aluminized Screen)

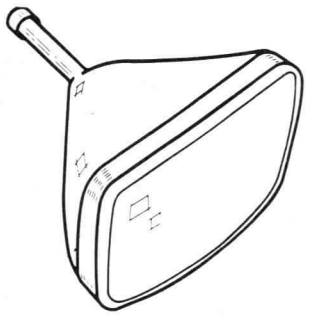

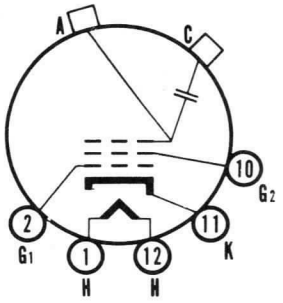

12-N

SYLVANIA ELECTRIC PRODUCTS INC.

TELEVISION PICTURE TUBE DIVISION
SENECA FALLS, NEW YORK

Prepared and Released By The TECHNICAL PUBLICATIONS SECTION EMPORIUM, PENNSYLVANIA

OCTOBER 1953

SYLVANIA

24CP4

24CP4A

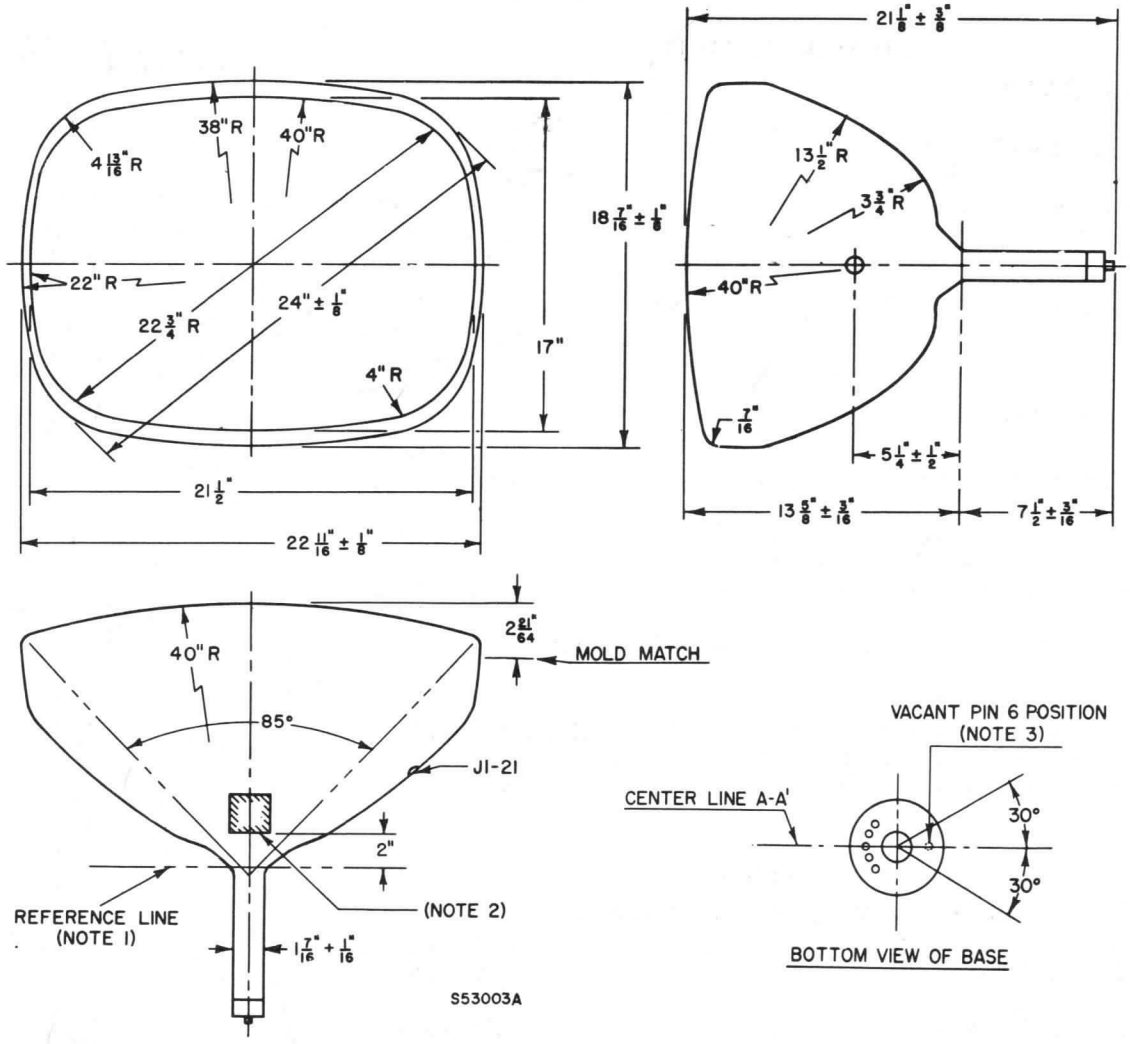

DIAGRAM NOTES:

1. *Reference line is determined by the plane C-C1 of the reference line gauge (JETEC No. 110) when the gauge is resting on the glass cone. The neck diameter near the cone may exceed 1.500" but is limited by the internal contour of the yoke reference line gauge.*
2. *In the interest of reducing the number of potential types due to different external coating shapes; only the 2" x 2" contact point is defined on the picture tube as shown in the drawing. The external coating may take any configuration above the reference line to produce the desired capacitance.*
3. *Anode contact aligns with vacant pin position No. 6 ± 30 degrees.*

24CP4A

The Sylvania Type 24CP4A is identical to Type 24CP4 except it has an aluminized screen.

The aluminized screen of Type 24CP4A increases its picture brightness and contrast. While the 18 kv operating condition is recommended for optimum picture quality, this type will operate satisfactorily at substantially lower voltages.

WARNING:

X-ray radiation shielding may be necessary to protect against possible danger of personal injury from prolonged exposure at close range if this tube is operated at higher than the manufacturer's Maximum Rated Anode Voltage or 16,000 volts, whichever is less.

SYLVANIA

engineering data service

SYLVANIA
24DP4
24DP4A

CHARACTERISTICS

GENERAL DATA

Focusing Method	Electrostatic
Deflecting Method	Magnetic
Deflection Angle	
Horizontal	85 Degrees
Diagonal	90 Degrees
Phosphor	P4
Fluorescence	White
Persistence	Medium
Faceplate	Gray Filter Glass
Light Transmittance (approx.)	68 Percent

ELECTRICAL DATA

Heater Voltage	6.3 Volts
Heater Current (approx.)	0.6 Ampere
Direct Interelectrode Capacitances (approx.)	
Cathode to All Other Electrodes	5 $\mu\mu$f
Grid No. 1 to All Other Electrodes	6 $\mu\mu$f
External Conductive Coating to Anode[1]	750 $\mu\mu$f Max.
	500 $\mu\mu$f Min.
Ion Trap Magnet	External, Single Field Type

MECHANICAL DATA

Minimum Useful Screen Dimensions	21¼ x 16¾ Inches
Bulb Contact (Recessed Small Cavity Cap)	J1-21
Base (Small Shell Duodecal 6-Pin)	B6-63
Basing	12L

RATINGS

MAXIMUM RATINGS (Design Center Values)

Anode Voltage	20,000 Volts dc
Grid No. 4 Voltage (Focusing Electrode)	−500 to +1000 Volts dc
Grid No. 2 Voltage	500 Volts dc
Grid No. 1 Voltage	
Negative Bias Value	125 Volts dc
Positive Bias Value	0 Volts dc
Positive Peak Value	2 Volts
Peak Heater-Cathode Voltage	
Heater Negative with Respect to Cathode During Warm-Up Period Not to Exceed 15 Seconds	410 Volts
After Equipment Warm-Up Period	180 Volts
Heater Positive with Respect to Cathode	180 Volts

RECOMMENDED OPERATING CONDITIONS

Anode Voltage	18,000 Volts dc
Grid No. 4 Voltage	−72 to +396 Volts dc
Grid No. 2 Voltage	300 Volts dc
Grid No. 1 Voltage Required for Cutoff[2]	−28 to −72 Volts dc
Ion Trap Magnet Strength (approx.)	40 Gausses

CIRCUIT VALUES

Grid No. 1 Circuit Resistance	1.5 Megohms Max.

NOTES:

1. *External conductive coating must be grounded.*
2. *Visual extinction of focused raster. Extinction of stationary focused spot will require that these values be about 5 volts more negative.*

QUICK REFERENCE DATA

Television Picture Tube
24" Direct Viewed
Rectangular Glass Type
Spherical Faceplate
Gray Filter Glass
Magnetic Deflection
Electrostatic Focus
Single Field Ion Trap
External Conductive Coating
(24DP4A has an Aluminized Screen)

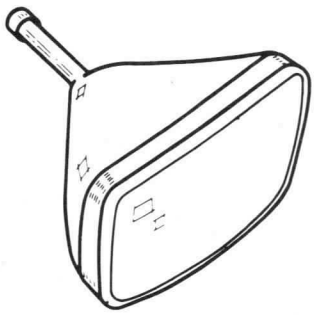

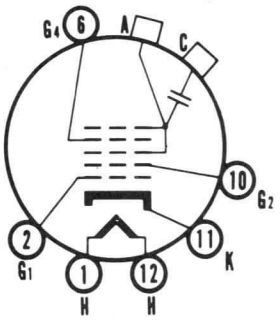

12-L

SYLVANIA ELECTRIC PRODUCTS INC.
TELEVISION PICTURE TUBE DIVISION
SENECA FALLS, NEW YORK

Prepared and Released By The TECHNICAL PUBLICATIONS SECTION EMPORIUM, PENNSYLVANIA

MAY 1954

SYLVANIA

24DP4

24DP4A

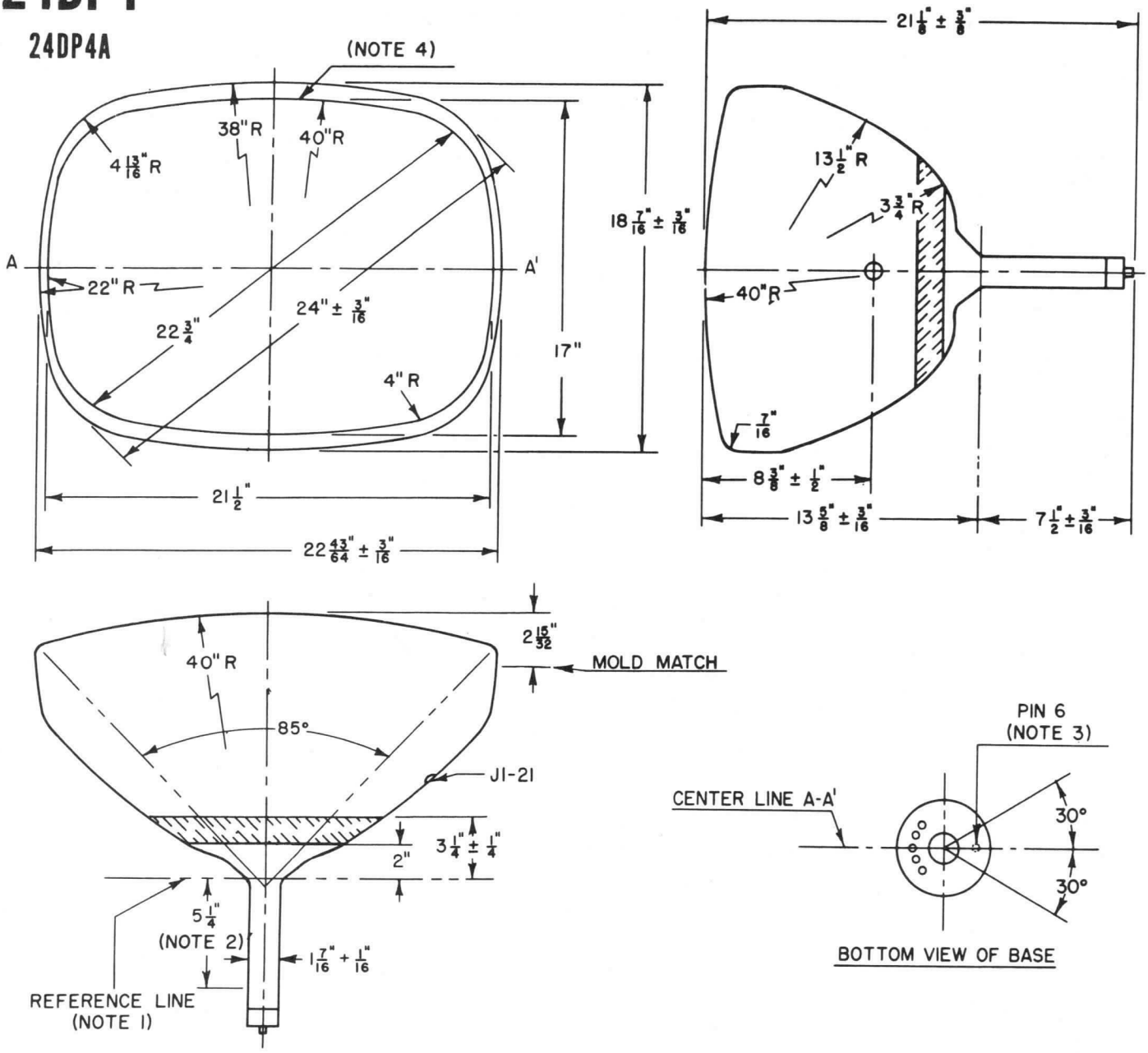

DIAGRAM NOTES:

1. *Reference line is determined by the plane C-C1 of the reference line gauge (JETEC No. 116) when the gauge is resting on the glass cone. The neck diameter near the cone may exceed 1.500" but is limited by the internal contour of the yoke reference line gauge.*
2. *Nominal position of ion trap magnet.*
3. *Anode contact aligns with pin position No. 6 ±30 degrees.*
4. *Suggested mask opening.*

24DP4A

The Sylvania Type 24DP4A is identical to the Type 24DP4 except it has an aluminized screen.

The aluminized screen of Type 24DP4A increases its picture brightness and contrast. While the 18 Kv operating condition is recommended for optimum picture quality, this type will operate satisfactorily at substantially lower voltages.

WARNING:

X-ray radiation shielding may be necessary to protect against possible danger of personal injury from prolonged exposure at close range if this tube is operated at higher than the manufacturer's Maximum Rated Anode Voltage or 16,000 volts, whichever is less.

SYLVANIA

engineering data service

SYLVANIA

24YP4

CHARACTERISTICS

GENERAL DATA

Focusing Method	Electrostatic
Deflecting Method	Magnetic
Deflection Angle	
Horizontal	85 Degrees
Diagonal	90 Degrees
Phosphor	P4
Fluorescence	White
Persistence	Medium
Faceplate	Gray Filter Glass
Light Transmittance (approx.)	68 Percent

ELECTRICAL DATA

Heater Voltage	6.3 Volts
Heater Current	0.6 ± 5% Ampere
Heater Warm-up Time[1]	11 Seconds
Direct Interelectrode Capacitances (approx.)	
Cathode to All Other Electrodes	5 $\mu\mu$f
Grid No. 1 to All Other Electrodes	6 $\mu\mu$f
External Conductive Coating to Anode[2]	1500 $\mu\mu$f Max.
	1200 $\mu\mu$f Min.
Ion Trap Magnet	External, Single Field Type

MECHANICAL DATA

Minimum Useful Screen Dimensions	21¼ x 16¾ Inches
Useful Screen Area (approx.)	325 Sq. Inches
Bulb Contact (Recessed Small Cavity Cap)	J1-21
Base (Small Shell Duodecal 6-Pin)	B6-63
Basing	12L

RATINGS

MAXIMUM RATINGS (Design Center Values)

Anode Voltage	20,000 Volts dc
Grid No. 4 Voltage (Focusing Electrode)	-500 to +1000 Volts dc
Grid No. 2 Voltage	500 Volts dc
Grid No. 1 Voltage	
Negative Bias Value	125 Volts dc
Positive Bias Value	0 Volts dc
Positive Peak Value	2 Volts
Peak Heater-Cathode Voltage	
Heater Negative with Respect to Cathode	
During Warm-Up Period Not to Exceed 15 Seconds	410 Volts
After Equipment Warm-Up Period	180 Volts
Heater Positive with Respect to Cathode	180 Volts

RECOMMENDED OPERATING CONDITIONS

Anode Voltage	18,000 Volts dc
Grid No. 4 Voltage	-72 to +396 Volts dc
Grid No 2 Voltage	300 Volts dc
Grid No. 1 Voltage Required for Cutoff[3]	-28 to -72 Volts dc
Ion Trap Magnet Strength (approx.)	40 Gausses

CIRCUIT VALUES

Grid No. 1 Circuit Resistance	1.5 Megohms Max.

QUICK REFERENCE DATA

Television Picture Tube
24" Direct Viewed
Rectangular Glass Type
Spherical Faceplate
Gray Filter Glass
Magnetic Deflection
Electrostatic Focus
Single Field Ion Trap
External Conductive Coating
Aluminized Screen

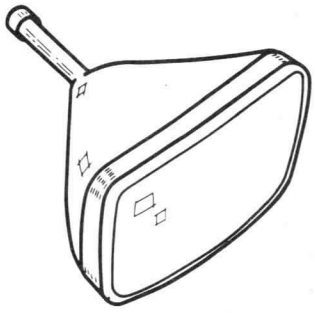

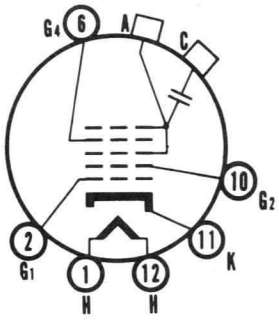

12-L

SYLVANIA ELECTRIC PRODUCTS INC.
TELEVISION PICTURE TUBE DIVISION
SENECA FALLS, NEW YORK

Prepared and Released By The TECHNICAL PUBLICATIONS SECTION EMPORIUM, PENNSYLVANIA

MAY 1955

SYLVANIA

24YP4

NOTES:

1. *Heater warm-up time is the time required for the voltage across the heater terminals to increase to 5.0 volts in the JETEC test circuit, with E = 25 volts and series R = 31.5 ohms.*
2. *External conductive coating must be grounded.*
3. *Visual extinction of focused raster. Extinction of stationary focused spot will require that these values be about 5 volts more negative.*
4. *Because of the combination of high external coating capacitance and high anode rating on Type 24YP4, equipment designers using 24YP4 should be familiar with those paragraphs dealing with shock hazard, of Underwriters Laboratories "Requirements for Television Receiving Appliances".*

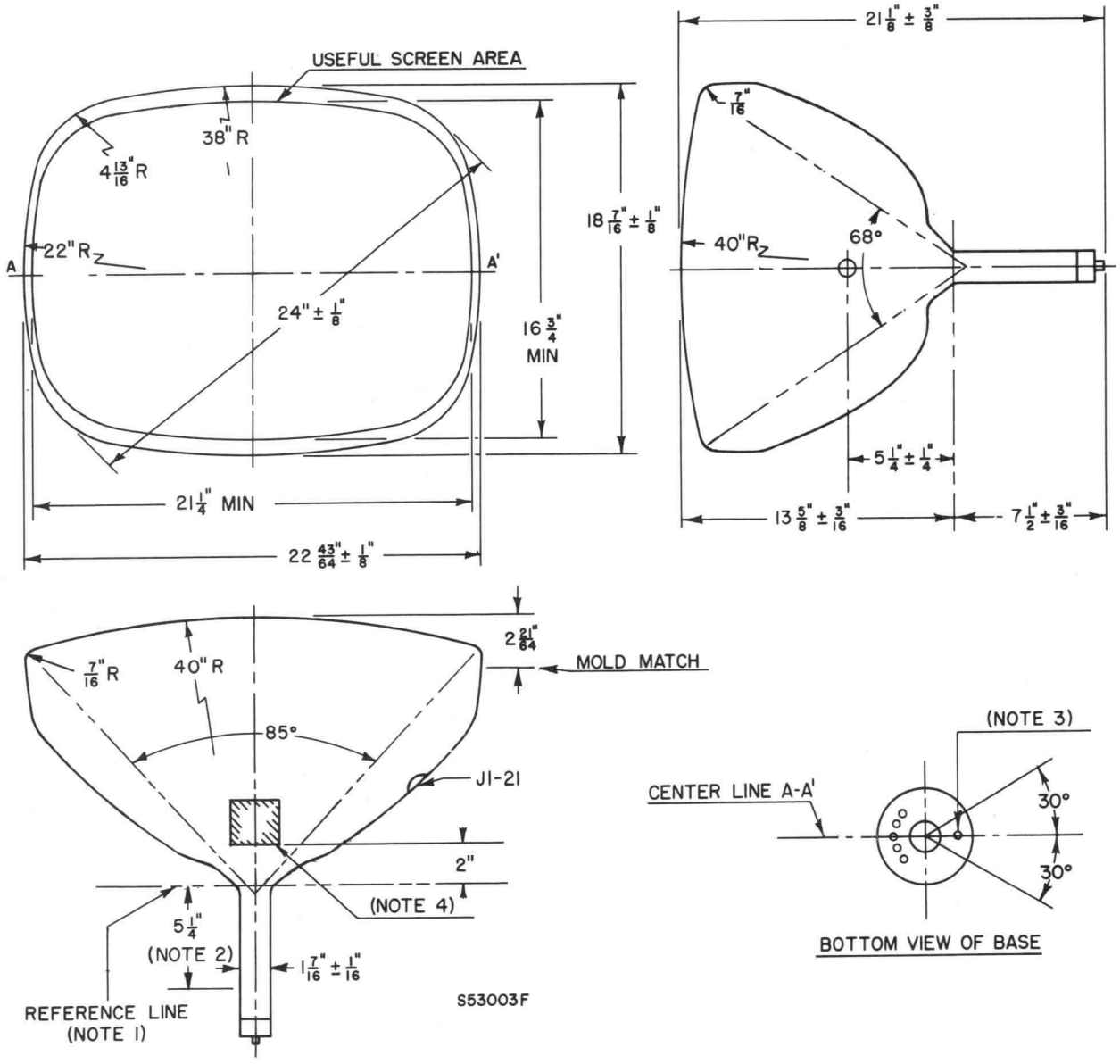

DIAGRAM NOTES:

1. *Reference line is determined by the plane C-C1 of the reference line gauge (JETEC No. 116) when the gauge is resting on the glass cone. The neck diameter near the cone may exceed 1.500" but is limited by the internal contour of the yoke reference line gauge.*
2. *Nominal position of ion trap magnet.*
3. *Anode contact aligns with pin position No. 6 ±30 degrees.*
4. *Contact area for external conductive coating, 2" x 2", located 90° counterclockwise from anode contact as viewed from base end of tube.*

WARNING:

X-ray radiation shielding may be necessary to protect against possible danger of personal injury from prolonged exposure at close range if this tube is operated at higher than the manufacturer's Maximum Rated Anode Voltage or 16,000 volts, whichever is less.

CHARACTERISTICS

GENERAL DATA

Focusing Method	Electrostatic
Deflection Method	Magnetic
Deflection Angles (Approx.)	
Horizontal	100 Degrees
Diagonal	110 Degrees
Vertical	83 Degrees
Phosphor	Aluminized P4
Fluorescence	White
Persistence	Medium Short
Faceplate	Gray Filter Glass
Light Transmittance at Center (Approx.)	40 Percent

ELECTRICAL DATA

Heater Voltage	6.3 Volts	
Heater Current	0.3 ± 5 % Ampere	
Heater Warm-up Time[1]	14 Seconds	
Direct Interelectrode Capacitances (Approx.)		
Cathode to All Other Electrodes	5 pf	
Grid No. 1 to All Other Electrodes	6 pf	
External Conductive Coating and Metal Frame to Anode[2]	2500 pf	Max.
	2000 pf	Min.
Resistance Between External Conductive Coating and Metal Frame	50 Megohms	Min.

MECHANICAL DATA

Minimum Useful Screen Dimensions (Maximum Assured)	
Height	$16\frac{7}{16}$ Inches
Width	$20\frac{15}{16}$ Inches
Diagonal	$24\frac{1}{4}$ Inches
Area	327 Sq. Inches
Neck Length	
25DP4	$4\frac{3}{8} \pm \frac{1}{8}$ Inches
25EP4	$5\frac{1}{8} \pm \frac{1}{8}$ Inches
Overall Length	
25DP4	$15\frac{1}{16} \pm \frac{5}{16}$ Inches
25EP4	$15\frac{13}{16} \pm \frac{5}{16}$ Inches
Bulb	C204 Exp. No. 1
Bulb Contact (Recessed Small Cavity Cap)	J1-21
Base	B7-208
Basing	8HR
Weight (Approx.)	36 Pounds

RATINGS

MAXIMUM RATINGS (Design Maximum Values)

Grid Drive Service[3]		
Maximum Anode Voltage	22,000 Volts	dc
Minimum Anode Voltage	12,000 Volts	dc
Grid No. 4 (Focusing Electrode) Voltage	−550 to +1100 Volts	dc
Maximum Grid No. 2 Voltage	700 Volts	dc
Minimum Grid No. 2 Voltage	200 Volts	
Grid No. 1 Voltage		
Negative Bias Value	155 Volts	dc
Negative Peak Value	200 Volts	
Positive Bias Value	0 Volt	dc
Positive Peak Value	2 Volts	
Peak Heater-Cathode Voltage		
Heater Negative with Respect to Cathode During Warm-up Period Not to Exceed 15 Seconds	450 Volts	
After Equipment Warm-up Period	300 Volts	
Heater Positive with Respect to Cathode	200 Volts	
DC Component	100 Volts	

QUICK REFERENCE DATA

Television Picture Tube
25″ Direct Viewed
Rectangular Glass Type
Gray Filter Glass
Aluminized Screen
Electrostatic Focus
110° Magnetic Deflection
No Ion Trap
External Conductive Coating
Bonded Frame (Filled Rim)
Implosion Protection
25DP4: Short Neck

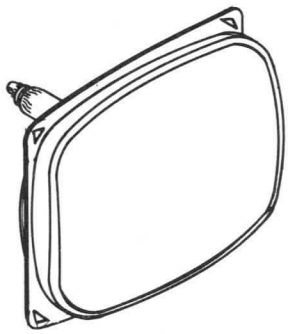

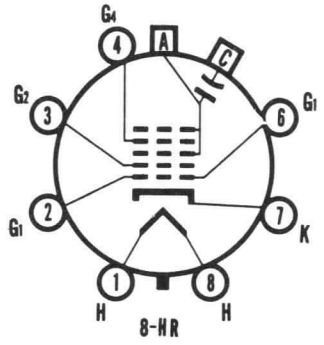

SYLVANIA ELECTRIC PRODUCTS INC.

Electronic Components Group
ELECTRONIC TUBE DIVISION
SENECA FALLS, NEW YORK

A Technical Publication
MARCH, 1965

File Under
TELEVISION PICTURE TUBES

TYPICAL OPERATING CONDITIONS

Grid Drive Service[3]		
Anode Voltage	16,000 Volts	dc
Grid No. 4 Voltage for Focus[6]	0 Volt	dc
Grid No. 2 Voltage	300 Volts	dc
Grid No. 1 Voltage Required for cutoff[5]	−35 to −72 Volts	dc
Cathode Drive Service[4]		
Anode Voltage	16,000 Volts	dc
Grid No. 4 Voltage for Focus[6]	0 Volt	dc
Grid No. 2 Voltage	300 Volts	dc
Cathode Voltage Required for Cutoff[5]	+32 to +60 Volts	dc

CIRCUIT VALUES

Grid No. 1 Resistance	1.5 Megohms Max.

NOTES:

1. *Heater warm-up time is defined as the time required for the voltage across the heater to reach 80 % of the rated heater voltage after applying four (4) times rated heater voltage to a circuit consisting of the tube heater in series with a resistance equal to three (3) times the rated heater voltage divided by the rated heater current.*
2. *External conductive coating and rim band must be grounded.*
3. *Voltages are positive with respect to cathode unless otherwise indicated.*
4. *Voltages are positive with respect to Grid No. 1 unless otherwise indicated.*
5. *Visual extinction of focused raster. Extinction of stationary focused spot will require that the absolute value of the bias between cathode and grid No. 1 be increased by about 5 volts.*
6. *Tubes will have satisfactory focus at some value between −200 and +200 volts.*

WARNING:

X-ray radiation shielding may be necessary to protect against possible danger of personal injury from prolonged exposure at close range if this tube is operated at higher than the manufacturer's Maximum Rated Anode Voltage or 16,000 volts, whichever is less.

OUTLINE

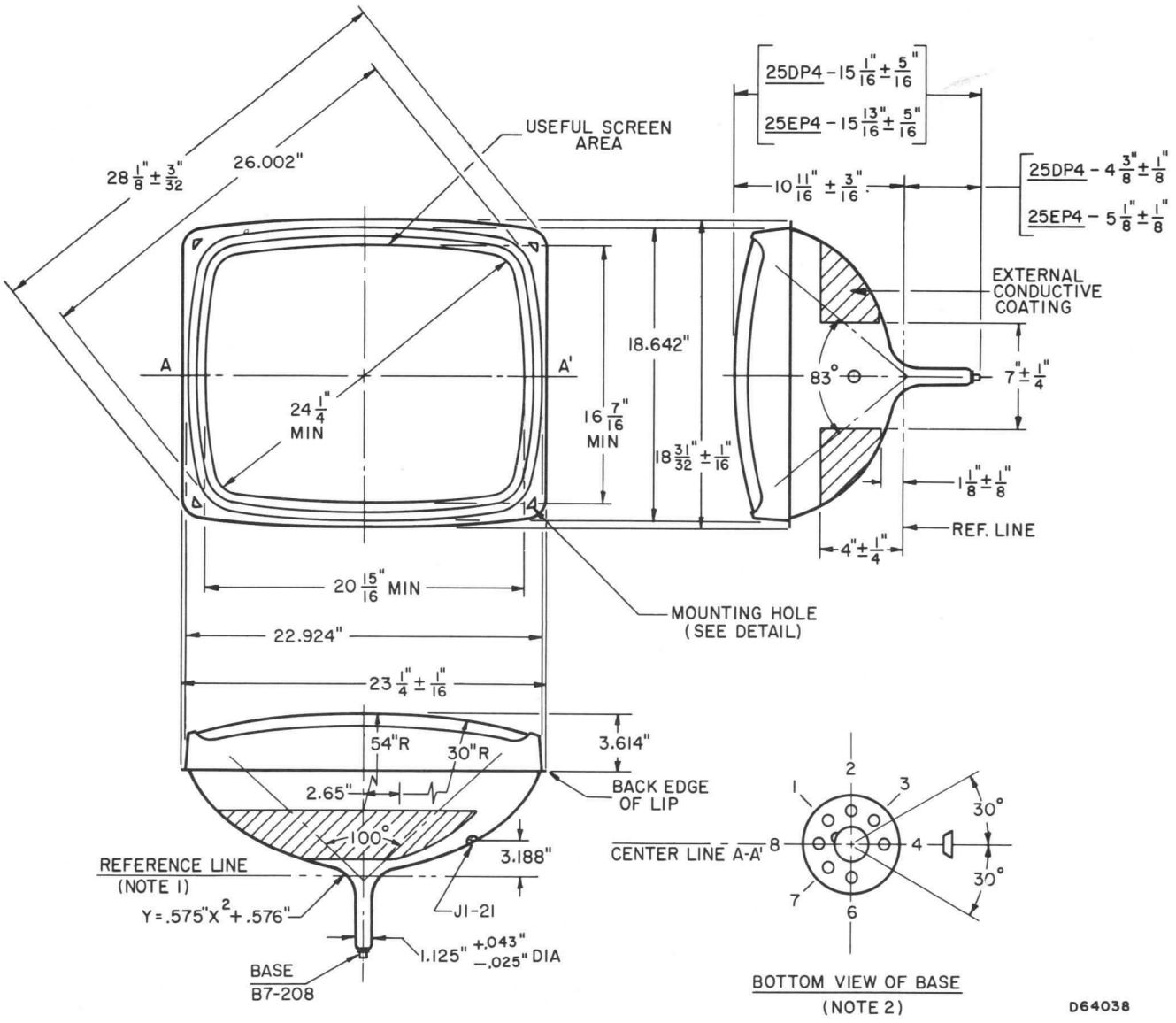

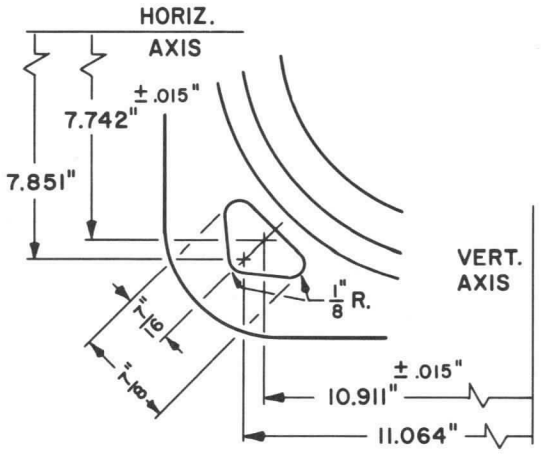

Detail of
Mounting Hole
(1 hole in each corner)

DIAGRAM NOTES:

1. *Reference Line is determined by plane C-C' of JEDEC No. 126 Reference Line Gauge, when the gauge is seated against the bulb.*
2. *Base Pin No. 4 aligns with horizontal centerline (A-A') within 30° and is on same side as anode contact, J1-21.*

CHARACTERISTICS

GENERAL DATA

Focusing Method	Electrostatic
Deflection Method	Magnetic
Deflection Angles (Approx.)	
Horizontal	85 Degrees
Diagonal	90 Degrees
Vertical	68 Degrees
Phosphor	Aluminized P4
Fluorescence	White
Persistence	Short to Medium
Faceplate	Bonded Shield
Gray Filterglass Safety Plate Laminated Directly to Face of Tube	
Light Transmittance of Faceplate Assembly (Approx.)	45 Percent

ELECTRICAL DATA

Heater Voltage	6.3 Volts	
Heater Current	0.6 ± 5 % Ampere	
Heater Warm-up Time[1]	11 Seconds	
Direct Interelectrode Capacitances (Approx.)		
Cathode to All Other Electrodes	5 μμf	
Grid No. 1 to All Other Electrodes	6 μμf	
External Conductive Coating to Anode[2]	2500 μμf	Max.
	2000 μμf	Min.

MECHANICAL DATA

Minimum Useful Screen Dimensions (Maximum Assured)	24 ¼ x 18 5/8 Inches
Minimum Useful Screen Area	425 Square Inches
Neck Length	6 ± 3/16 Inches
Overall Length	21 13/16 ± 7/16 Inches
Bulb	J214 ½A
Faceplate	FP-214 ½A1
Bulb Contact (Recessed Small Cavity Cap)	J1-21
Base	B6-203
Basing	12L
Weight (Approx.)	54 Pounds

RATINGS

MAXIMUM RATINGS (Design Maximum Values)

Grid Drive Service[3]		
Maximum Anode Voltage	25,000 Volts	dc
Minimum Anode Voltage	11,000 Volts	dc
Grid No. 4 Voltage (Focusing Electrode)	−550 to +1100 Volts	dc
Maximum Grid No. 2 Voltage	550 Volts	dc
Minimum Grid No. 2 Voltage	200 Volts	dc
Grid No. 1 Voltage		
Negative Bias Value	155 Volts	dc
Negative Peak Value	220 Volts	dc
Positive Bias Value	0 Volts	
Positive Peak Value	2 Volts	
Peak-Heater-Cathode Voltage		
Heater Negative with Respect to Cathode		
During Warm-up Period not to Exceed 15 Sec.	450 Volts	
After Equipment Warm-up Period	200 Volts	
Heater Positive with Respect to Cathode	200 Volts	

QUICK REFERENCE DATA

Television Picture Tube
27″ Direct Viewed
Rectangular Glass Type
Spherical Faceplate
Gray Filter Glass
Aluminized Screen
Electrostatic Focus
90° Magnetic Deflection
1 7/16″ Neck Diameter
No Ion Trap
External Conductive Coating
Bonded Shield

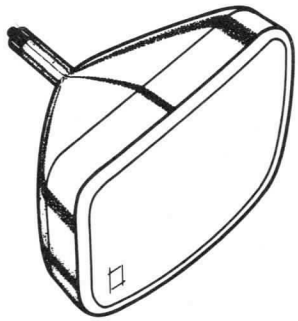

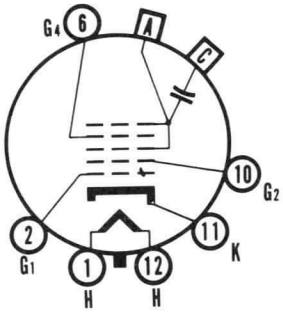

12-L

SYLVANIA
ELECTRONIC TUBES
A Division of
Sylvania Electric Products Inc.
PICTURE TUBE
OPERATIONS
SENECA FALLS, NEW YORK

Prepared and Released By The
TECHNICAL PUBLICATIONS SECTION
EMPORIUM, PENNSYLVANIA
DECEMBER, 1962

File Under
TELEVISION PICTURE TUBES

MAXIMUM RATINGS (Design Maximum Values) Continued

Cathode Drive Service[4]		
Maximum Anode Voltage	25,000 Volts	dc
Minimum Anode Voltage	11,000 Volts	dc
Grid No. 4 Voltage (Focusing Electrode)	−400 to +1250 Volts	dc
Maximum Grid No. 2 Voltage	700 Volts	dc
Minimum Grid No. 2 Voltage	350 Volts	dc
Cathode Voltage		
Positive Bias Value	155 Volts	dc
Positive Peak Value	220 Volts	
Negative Bias Value	0 Volts	dc
Negative Peak Value	2 Volts	
Peak Heater-Cathode Voltage		
Heater Negative with Respect to Cathode During		
Warm-up Period not to Exceed 15 Seconds	450 Volts	
After Equipment Warm-up Period	200 Volts	
Heater Positive with Respect to Cathode	200 Volts	

TYPICAL OPERATING CONDITIONS

Grid Drive Service[3]		
Anode Voltage	18,000 Volts	dc
Grid No. 4 Voltage for Focus	0 to 400 Volts	dc
Grid No. 2 Voltage	400 Volts	dc
Grid No. 1 Voltage Required for Cutoff[5]	−48 to −96 Volts	dc
Cathode Drive Service[4]		
Anode Voltage	18,000 Volts	dc
Grid No. 4 Voltage for Focus	0 to 400 Volts	dc
Grid No. 2 Voltage	400 Volts	dc
Cathode Voltage Required for Cutoff[5]	+46 to +80 Volts	dc

CIRCUIT VALUES

Grid No. 1 Circuit Resistance	1.5 Megohms Max.

NOTES:

1. *Heater warm-up time is defined as the time required for the voltage across the heater to reach 80 % of its rated value after applying four (4) times rated heater voltage to a circuit consisting of the tube heater in series with a resistance equal to three (3) times rated heater voltage divided by rated heater current.*
2. *External conductive coating must be grounded.*
3. *Unless otherwise specified, voltages are positive with respect to cathode.*
4. *Unless otherwise specified, voltages are positive with respect to Grid No. 1.*
5. *Visual extinction of focused raster. Extinction of stationary focused spot will require that these values be increased by about 5 volts.*

WARNING:

X-ray radiation shielding may be necessary to protect against possible danger of personal injury from prolonged exposure at close range if this tube is operated at higher than the manufacturer's Maximum Rated Anode Voltage or 16,000 volts, whichever is less.

OUTLINE

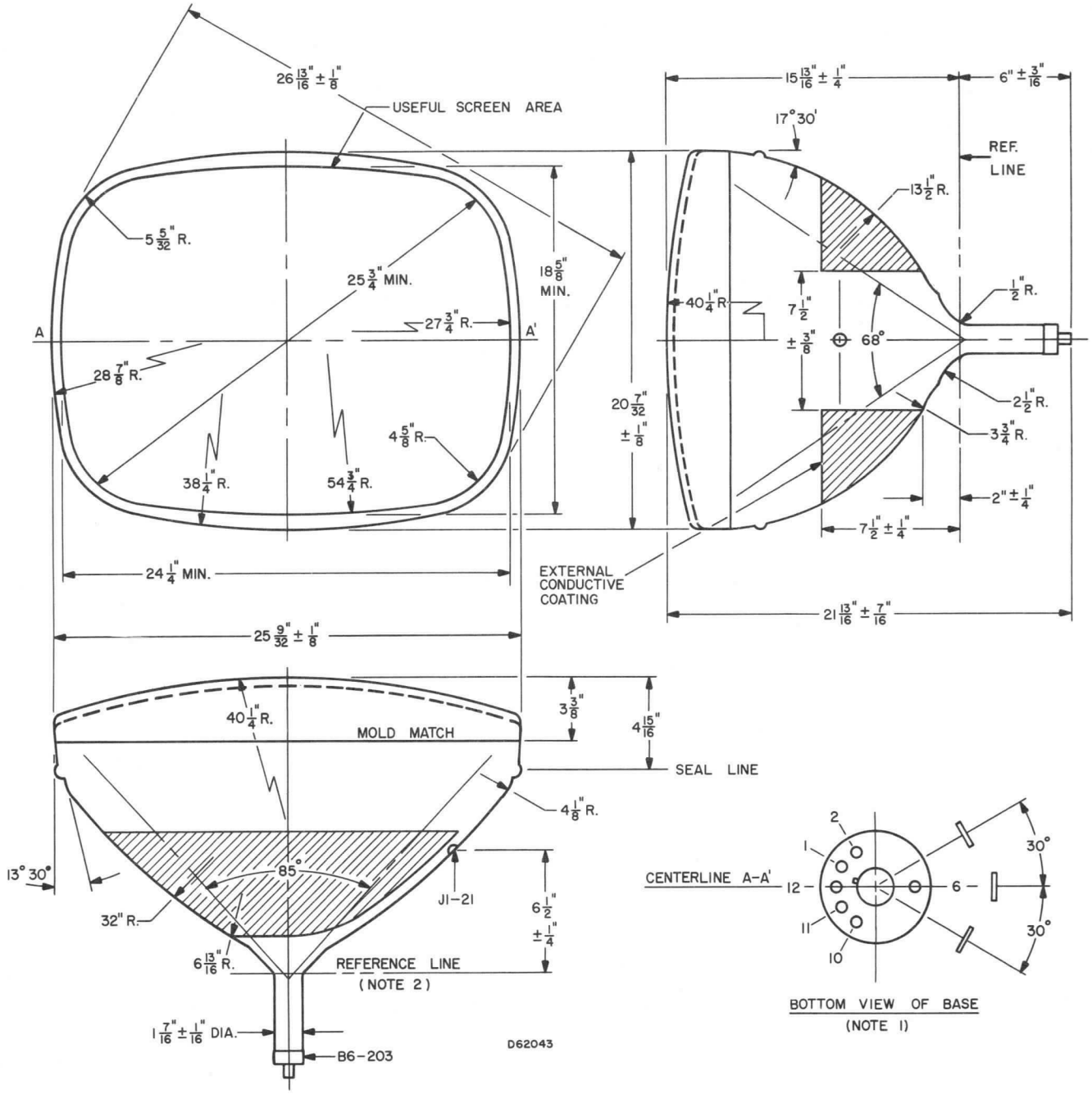

DIAGRAM NOTES:

1. *The plane through the tube axis and Pin No. 6 may vary from the plane through the tube axis and anode terminal by an angular tolerance (measured about the tube axis) of ±30°. Anode terminal is on same side as Pin No. 6.*
2. *With tube neck inserted through flared end of reference line gauge JEDEC No. G-116 and with tube seated in gauge, the reference line is determined by the intersection of the Plane CC' of the gauge with the glass funnel.*

CHARACTERISTICS

GENERAL DATA

Focusing Method	Electrostatic
Deflection Method	Magnetic
Deflection Angles (Approx.)	
Horizontal	104 Degrees
Diagonal	110 Degrees
Vertical	85 Degrees
Phosphor	Aluminized P4
Fluorescence	White
Persistence	Short to Medium
Faceplate	Bonded Shield
Gray Filterglass Safety Plate Laminated Directly to Face of Plate	
Light Transmittance of Faceplate Assembly (Approx.)	45 Percent

ELECTRICAL DATA

Heater Voltage	6.3 Volts	
Heater Current—27ADP4	0.6 ± 5 % Ampere	
Heater Current—27AFP4	0.3 ± 5 % Ampere	
Heater Warm-up Time[1]	11 Seconds	
Direct Interelectrode Capacitances (Approx.)		
Cathode to All Other Electrodes	5 μμf	
Grid No. 1 to All Other Electrodes	6 μμf	
External Conductive Coating to Anode[2]	2500 μμf	Max.
	2000 μμf	Min.

MECHANICAL DATA

Minimum Useful Screen Dimensions (Max. Assured)	
Height	18 5/8 Inches
Width	24 1/4 Inches
Diagonal	25 3/4 Inches
Minimum Useful Screen Area	425 Square Inches
Neck Length	5 3/8 ± 3/16 Inches
Overall Length	17 9/16 ± 7/16 Inches
Bulb Contact (Recessed Small Cavity Cap)	J1-21
Bulb	J214 ½B
Safety Plate	FP-214 ½A1
Base	B7-208
Basing	8HR
Weight (Approx.)	51 Pounds

RATINGS

MAXIMUM RATINGS (Design Maximum Values)

Grid Drive Service[3]		
Maximum Anode Voltage	22,000 Volts	dc
Minimum Anode Voltage	12,000 Volts	dc
Grid No. 4 Voltage (Focusing Electrode)	−550 to +1100 Volts	dc
Maximum Grid No. 2 Voltage	550 Volts	dc
Minimum Grid No. 2 Voltage	200 Volts	dc
Grid No. 1 Voltage		
Negative Bias Value	155 Volts	dc
Negative Peak Value	220 Volts	
Positive Bias Value	0 Volts	dc
Positive Peak Value	2 Volts	
Peak Heater-Cathode Voltage		
Heater Negative with Respect to Cathode		
During Warm-up Period not to Exceed 15 Seconds	450 Volts	
After Equipment Warm-up Period	200 Volts	
Heater Positive with Respect to Cathode	200 Volts	

QUICK REFERENCE DATA

Television Picture Tube
27″ Direct Viewed
Rectangular Glass Type
Spherical Faceplate
Bonded Shield
27ADP4: 6.3V/600 Ma Heater
27AFP4: 6.3V/300 Ma Heater
Aluminized Screen
Electrostatic Focus
110° Magnetic Deflection
1⅛″ Neck Diameter
No Ion Trap
External Conductive Coating

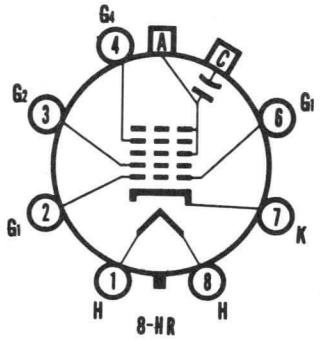

SYLVANIA
ELECTRONIC TUBES

A Division of
Sylvania Electric Products Inc.

PICTURE TUBE
OPERATIONS

SENECA FALLS, NEW YORK

Prepared and Released By The
TECHNICAL PUBLICATIONS SECTION
EMPORIUM, PENNSYLVANIA

DECEMBER, 1962

File Under
TELEVISION PICTURE TUBES

MAXIMUM RATINGS (Design Maximum Values) Continued

Cathode Drive Service[4]		
Maximum Anode Voltage	22,000 Volts	dc
Minimum Anode Voltage	12,000 Volts	dc
Grid No. 4 Voltage (Focusing Electrode)	−400 to +1250 Volts	dc
Maximum Grid No. 2 Voltage	700 Volts	dc
Minimum Grid No. 2 Voltage	350 Volts	dc
Cathode Voltage		
Positive Bias Value	155 Volts	dc
Positive Peak Value	220 Volts	
Negative Bias Value	0 Volts	dc
Negative Peak Value	2 Volts	
Peak Heater-Cathode Voltage		
Heater Negative with Respect to Cathode		
During Warm-up Period not to Exceed 15 Seconds	450 Volts	
After Equipment Warm-up Period	200 Volts	
Heater Positive with Respect to Cathode	200 Volts	

TYPICAL OPERATING CONDITIONS

Grid Drive Service[3]		
Anode Voltage	18,000 Volts	dc
Grid No. 4 Voltage for Focus	0 to 400 Volts	dc
Grid No. 2 Voltage	300 Volts	dc
Grid No. 1 Voltage Required for Cutoff[5]	−37 to −74 Volts	
Cathode Drive Service[4]		
Anode Voltage	18,000 Volts	dc
Grid No. 4 Voltage for Focus	0 to 400 Volts	dc
Grid No. 2 Voltage	300 Volts	dc
Cathode Voltage Required for Cutoff[5]	+37 to +62 Volts	dc

CIRCUIT VALUES

Grid No. 1 Circuit Resistance	1.5 Megohms Max.

NOTES:

1. *Heater warm-up time is defined as the time required for the voltage across the heater to reach 80 % of its rated value after applying four (4) times rated heater voltage to a circuit consisting of the tube heater in series with a resistance equal to three (3) times rated heater voltage divided by rated heater current.*
2. *External conductive coating must be grounded.*
3. *Unless otherwise specified, voltages are positive with respect to cathode.*
4. *Unless otherwise specified, voltages are positive with respect to Grid No. 1.*
5. *Visual extinction of focused raster. Extinction of stationary focused spot will require that these values be increased by about 5 volts.*

WARNING:

X-ray radiation shielding may be necessary to protect against possible danger of personal injury from prolonged exposure at close range if this tube is operated at higher than the manufacturer's Maximum Rated Anode Voltage or 16,000 volts, whichever is less.

OUTLINE

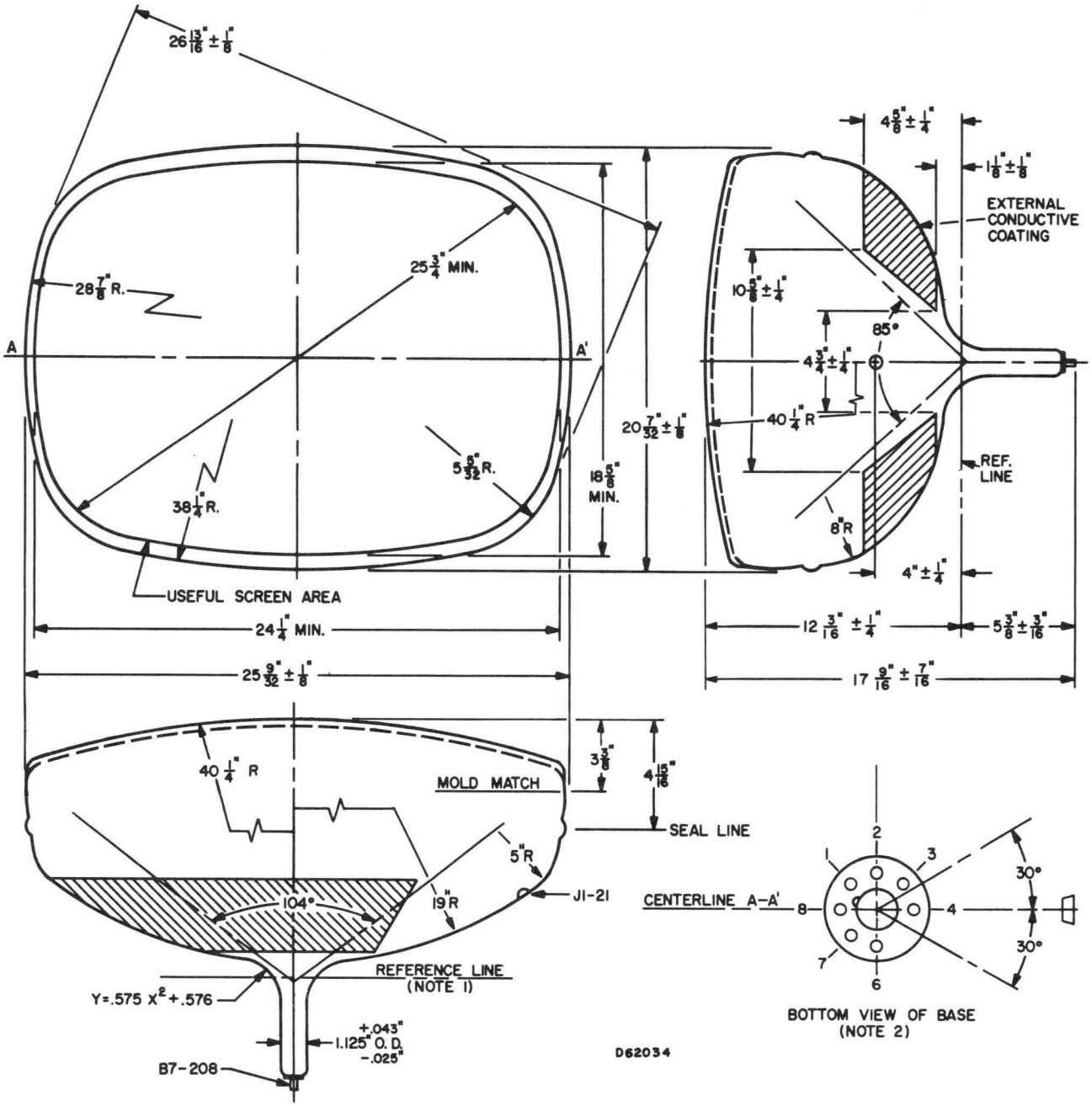

DIAGRAM NOTES:

1. *Reference Line is determined by Plane C-C' of JEDEC No. 126. Reference Line Gauge, when gauge is seated against the bulb.*
2. *Base Pin No. 4 aligns with horizontal centerline of tube within 30°, and is on same side as anode contact, J1-21.*

CHARACTERISTICS

GENERAL DATA

Focusing Method	Electrostatic
Deflection Method	Magnetic
Deflection Angles (Approx.)	
Horizontal	85 Degrees
Diagonal	90 Degrees
Vertical	68 Degrees
Phosphor	Aluminized P4
Fluorescence	White
Persistence	Short to Medium
Faceplate	Gray Filter Glass
Light Transmittance (Approx.)	70 Percent

ELECTRICAL DATA

Heater Voltage	6.3 Volts	
Heater Current	0.6 ± 5% Ampere	
Heater Warm-up Time[1]	11 Seconds	
Direct Interelectrode Capacitances (Approx.)		
Cathode to All Other Electrodes	5 μμf	
Grid No. 1 to All Other Electrodes	6 μμf	
External Conductive Coating to Anode[2]	2500 μμf	Max.
	1700 μμf	Min.

MECHANICAL DATA

Minimum Useful Screen Dimensions (Maximum Assured)	24¼ x 18⅝	Inches
Minimum Useful Screen Area	425	Sq. Inches
Neck Length	4½ ± 3/16	Inches
Overall Length	20 1/16 ± ⅜	Inches
Bulb	J214-½A	
Bulb Contact (Recessed Small Caviety Cap	J1-21	
Base	B6-203	
Basing	12L	
Weight (Approx.)	44	Lbs.

RATINGS

MAXIMUM RATINGS (Design Maximum Values)

Grid Drive Service[3]

Maximum Anode Voltage	23,000 Volts	dc
Minimum Anode Voltage	11,000 Volts	dc
Grid No. 4 Voltage (Focusing Electrode)	−550 to + 1100 Volts	dc
Maximum Grid No. 2 Voltage	550 Volts	dc
Minimum Grid No. 2 Voltage	200 Volts	dc
Grid No. 1 Voltage		
Negative Bias Value	155 Volts	dc
Negative Peak Value	220 Volts	
Positive Bias Value	0 Volts	dc
Positive Peak Value	2 Volts	
Peak Heater-Cathode Voltage		
Heater Negative with Respect to Cathode During Warm-up Period not to Exceed 15 Seconds	450 Volts	
After Equipment Warm-up Period	200 Volts	
Heater Positive with Respect to Cathode	200 Volts	

QUICK REFERENCE DATA

Television Picture Tube
27″ Direct Viewed
Rectangular Glass Type
Spherical Faceplate
Gray Filter Glass
Aluminized Screen
Electrostatic Focus
90° Magnetic Deflection
1 7/16″ Neck Diameter
No Ion Trap
External Conductive Coating
Short Neck

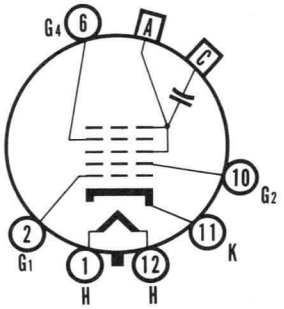

12-L

SYLVANIA
ELECTRONIC TUBES
A Division of
Sylvania Electric Products Inc.
PICTURE TUBE OPERATIONS
SENECA FALLS, NEW YORK
Prepared and Released By The
TECHNICAL PUBLICATIONS SECTION
EMPORIUM, PENNSYLVANIA
OCTOBER, 1961

File Under
TELEVISION PICTURE TUBES

MAXIMUM RATINGS (Design Maximum Values) (Continued)

Cathode Drive Service[4]

Maximum Anode Voltage	23,000 Volts	dc
Minimum Anode Voltage	11,000 Volts	dc
Grid No. 4 Voltage (Focusing Electrode)	−400 to + 1250 Volts	dc
Maximum Grid No. 2 Voltage	700 Volts	dc
Minimum Grid No. 2 Voltage	350 Volts	dc
Cathode Voltage		
Positive Bias Value	155 Volts	dc
Positive Peak Value	220 Volts	
Negative Bias Value	0 Volts	dc
Negative Peak Value	2 Volts	
Peak Heater-Cathode Voltage		
Heater Negative with Respect to Cathode During		
Warm-up Period not to Exceed 15 Seconds	450 Volts	
After Equipment Warm-up Period	200 Volts	
Heater Positive with Respect to Cathode	200 Volts	

TYPICAL OPERATING CONDITIONS

Grid Drive Service[3]

Anode Voltage	18,000 Volts	dc
Grid No. 4 Voltage for Focus	0 to 400 Volts	dc
Grid No. 2 Voltage	400 Volts	dc
Grid No. 1 Voltage Required for Cutoff[5]	−36 to −94 Volts	dc

Cathode Drive Service[4]

Anode Voltage	18,000 Volts	dc
Grid No. 4 Voltage for Focus	0 to 400 Volts	dc
Grid No. 2 Voltage	400 Volts	dc
Cathode Voltage Required for Cutoff[5]	+36 to +78 Volts	dc

CIRCUIT VALUES

Grid No. 1 Circuit Resistance	1.5 Megohms Max.

NOTES:

1. *Heater warm-up time is defined as the time required for the voltage across the heater to reach 80% of its rated value after applying four (4) times rated heater voltage to a circuit consisting of the tube heater in series with a resistance equal to three (3) times rated heater voltage divided by rated heater current.*
2. *External conductive coating must be grounded.*
3. *Unless otherwise specified, voltages are positive with respect to cathode.*
4. *Unless otherwise specified, voltages are positive with respect to Grid No. 1.*
5. *Visual extinction of focused raster. Extinction of stationary focused spot will require that these values be increased by about 5 volts.*

WARNING:

X-ray radiatation shielding may be necessary to protect against possible danger of personal injury from prolonged exposure at close range if this tube is operated at higher than the manufacturer's Maximum Rated Anode Voltage or 16,000 volts, whichever is less.

OUTLINE

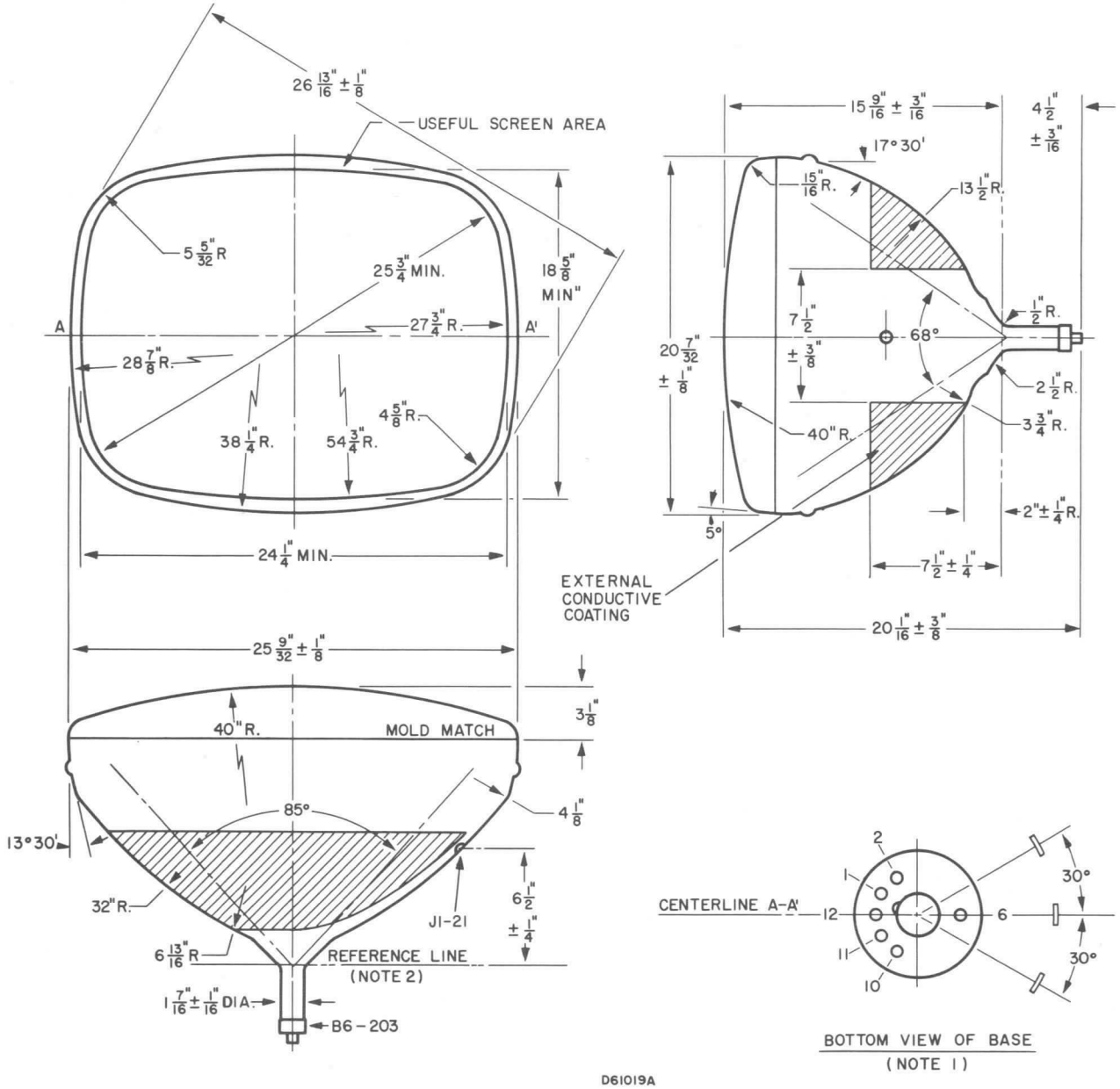

DIAGRAM NOTES:

1. *The plane through the tube axis and Pin No. 6 may vary from the plane through the tube axis and anode terminal by an angular tolerance (measured about the tube axis) of ±30°. Anode terminal is on same side as Pin No. 6.*
2. *With tube neck inserted through flared end of reference line gauge JEDEC No. G-116 and with tube seated in gauge, the reference line is determined by the intersection of the Plane CC' of the gauge with the glass funnel.*

CHARACTERISTICS

GENERAL DATA

Focusing Method	Electrostatic
Deflection Method	Magnetic
Deflection Angles (Approx.)	
Horizontal	104 Degrees
Diagonal	110 Degrees
Vertical	85 Degrees
Phosphor	Aluminized P4
Fluorescence	White
Persistence	Short to Medium
Faceplate	Gray Filter Glass
Light Transmittance (Approx.)	70 Percent

ELECTRICAL DATA

Heater Voltage	6.3 Volts	
Heater Current	0.6 ± 5 % Ampere	
Heater Warm-up Time[1]	11 Seconds	
Direct Interelectrode Capacitances (Approx.)		
Cathode to All Other Electrodes	5 μμf	
Grid No. 1 to All Other Electrodes	6 μμf	
External Conductive Coating to Anode[2]	2500 μμf	Max.
	2000 μμf	Min.

MECHANICAL DATA

Minimum Useful Screen Dimensions (Maximum Assured)	
Height	18 5/8 Inches
Width	24 1/4 Inches
Diagonal	25 3/4 Inches
Minimum Useful Screen Area	425 Sq. Inches
Neck Length	5 3/8 ± 3/16 Inches
Overall Length	17 5/16 ± 3/8 Inches
Bulb Contact (Recessed Small Cavity Cap)	J1-21
Bulb	J214 1/2B
Base	B7-208
Basing	8HR
Weight (Approx.)	41 Pounds

RATINGS

MAXIMUM RATINGS (Design Maximum Values) Grid Drive Service

Maximum Anode Voltage	22,000 Volts	dc
Minimum Anode Voltage	12,000 Volts	dc
Grid No. 4 Voltage (Focusing Electrode)	−550 to +1100 Volts	dc
Grid No. 2 Voltage	550 Volts	dc
Grid No. 1 Voltage		
Negative Bias Value	155 Volts	dc
Negative Peak Value	220 Volts	
Positive Bias Value	0 Volts	dc
Positive Peak Value	2 Volts	
Maximum Heater Voltage	6.9 Volts	
Minimum Heater Voltage	5.7 Volts	
Peak Heater-Cathode Voltage		
Heater Negative with Respect to Cathode		
During Warm-up Period Not to Exceed 15 Seconds	450 Volts	
After Equipment Warm-up Period	200 Volts	
Heater Positive with Respect to Cathode	200 Volts	

QUICK REFERENCE DATA

Television Picture Tube
27″ Direct Viewed
Rectangular Glass Type
Spherical Faceplate
Gray Filter Glass
Aluminized Screen
Electrostatic Focus
110° Magnetic Deflection
1 1/8″ Neck Diameter
No Ion Trap
External Conductive Coating

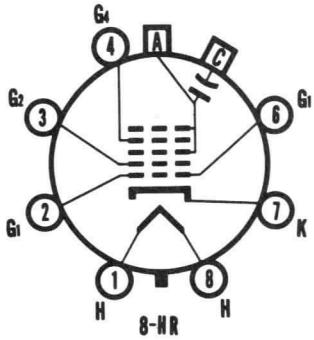

SYLVANIA
ELECTRONIC TUBES

A Division of
Sylvania Electric Products Inc.

PICTURE TUBE
OPERATIONS

SENECA FALLS, NEW YORK

Prepared and Released By The
TECHNICAL PUBLICATIONS SECTION
EMPORIUM, PENNSYLVANIA

MAY, 1962

File Under
TELEVISION PICTURE TUBES

TYPICAL OPERATING CONDITIONS, Grid Drive Service

Anode Voltage	18,000 Volts	dc
Grid No. 4 Voltage for Focus	0 to 400 Volts	dc
Grid No. 2 Voltage	300 Volts	dc
Grid No. 1 Voltage Required for Cutoff[3]	−35 to −72 Volts	dc

CIRCUIT VALUES

Grid No. 1 Circuit Resistance	1.5 Megohms Max.

NOTES:

1. *Heater warm-up time is defined as the time required for the voltage across the heater to reach 80 % of the rated heater voltage after applying four (4) times rated heater voltage to a circuit consisting of the tube heater in series with a resistance equal to three (3) times the rated heater voltage divided by the rated heater current.*
2. *External conductive coating must be grounded.*
3. *Visual extinction of focused raster. Extinction of stationary focused spot will require that these values be about 5 volts more negative.*

WARNING:

X-ray radiation shielding may be necessary to protect against possible danger of personal injury from prolonged exposure at close range if this tube is operated at higher than the manufacturer's Maximum Rated Anode Voltage or 16,000 volts, whichever is less.

OUTLINE

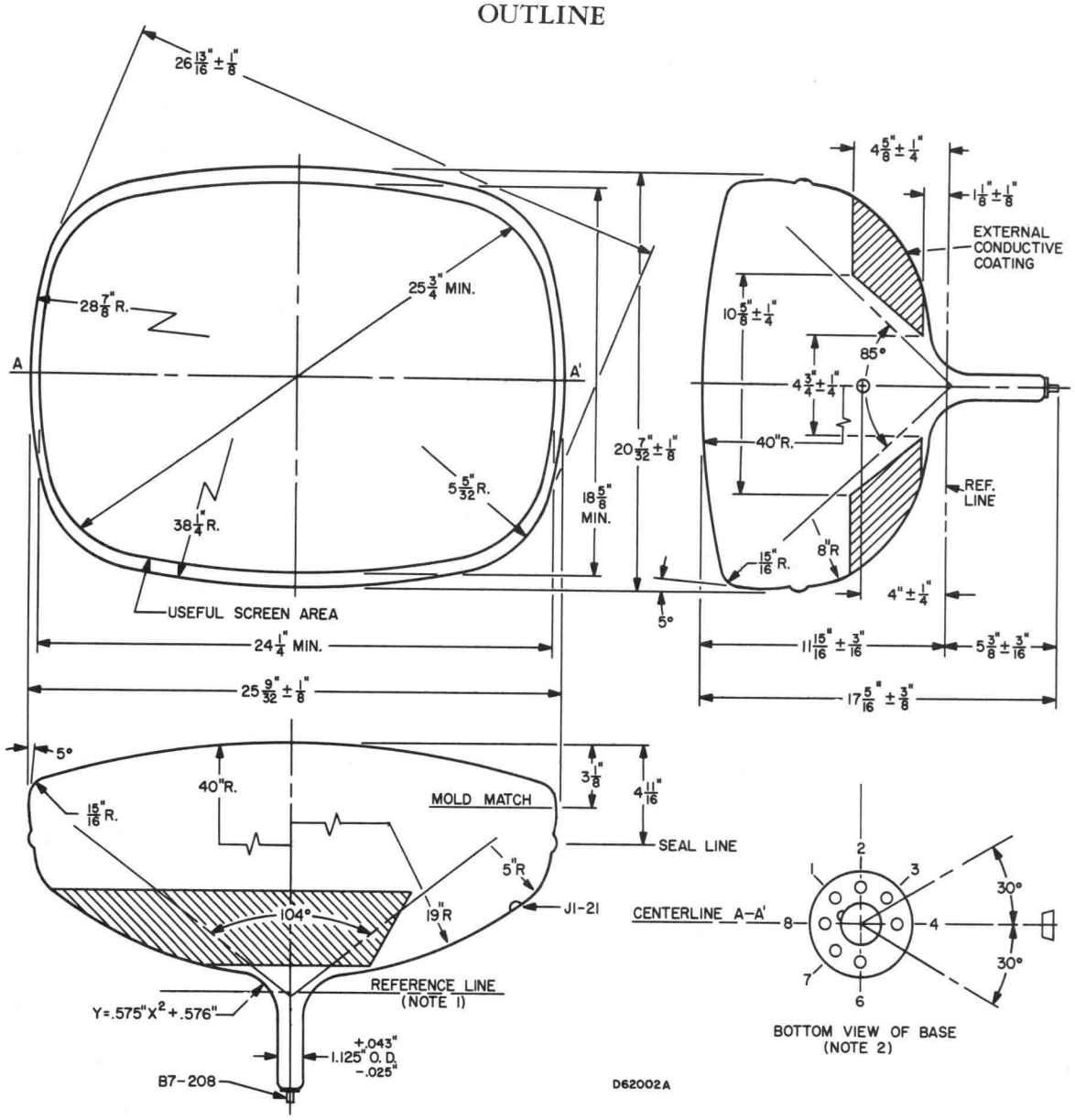

DIAGRAM NOTES:

1. *Reference line is determined by Plane C-C' of JEDEC No. 126 Reference Line Gauge, when gauge is seated against the bulb.*
2. *Base Pin No. 4 aligns with horizontal centerline of tube within 30°, and is on same side as anode contact, J1-21.*

SPECIAL AND GENERAL PURPOSE
CATHODE RAY TUBES - DATA

SYLVANIA

engineering data service

SYLVANIA

2AP1A

CHARACTERISTICS

GENERAL DATA

Focusing Method	Electrostatic
Deflecting Method	Electrostatic
Phosphor	P1
Fluorescence	Green
Persistence	Medium
Faceplate	Clear

ELECTRICAL DATA

Heater Voltage	6.3 Volts
Heater Current (approx.)	0.6 Ampere
Direct Interelectrode Capacitances (approx.)	
Cathode to All Other Electrodes	5.5 $\mu\mu$f
Grid to All Other Electrodes	8.0 $\mu\mu$f
Between Deflecting Plates 1-2[1]	0.6 $\mu\mu$f
Between Deflecting Plates 3-4[1]	1.1 $\mu\mu$f
Deflecting Plate 1 to All Other Electrodes Except DP2	8.0 $\mu\mu$f
Deflecting Plate 2 to All Other Electrodes Except DP1	4.6 $\mu\mu$f
Deflecting Plate 3 to All Other Electrodes Except DP4	7.5 $\mu\mu$f
Deflecting Plate 4 to All Other Electrodes Except DP3	6.0 $\mu\mu$f

MECHANICAL DATA

Minimum Useful Screen Diameter	1¾ Inches
Base	Small Shell Magnal 11-Pin
Basing	11L

RATINGS

MAXIMUM RATINGS (Absolute Values)

Anode No. 2 Voltage	1,100 Volts dc
Anode No. 1 Voltage	550 Volts dc
Grid Voltage	
Negative Value	125 Volts
Positive Value	0 Volts
Peak Heater-Cathode Voltage	
Heater Negative with Respect to Cathode	125 Volts
Heater Positive with Respect to Cathode	10 Volts
Peak Voltage Between Anode No. 2 And any Deflection Plate	660 Volts

RECOMMENDED OPERATING CONDITIONS

Anode No. 2 Voltage[2]	1,000 Volts dc
Anode No. 1 Voltage for Focus	137 to 300 Volts dc
Grid Voltage Required for Cutoff[3]	−30 to −90 Volts dc
Deflection Factor	
Deflecting Plates 1-2[4]	230 Volts dc/Inch
Deflecting Plates 3-4[5]	196 Volts dc/Inch

CIRCUIT VALUES

Grid Circuit Resistance	1.5 Megohms Max.
Deflection Circuit Resistance	5.0 Megohms Max.

QUICK REFERENCE DATA

Special Purpose Tube
2" Direct Viewed
Round Glass Type
Electrostatic Deflection
Electrostatic Focus

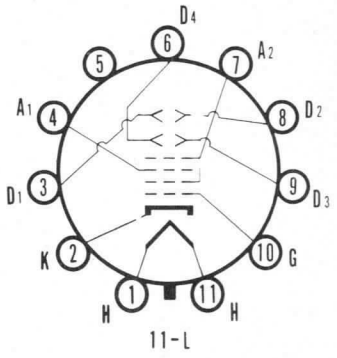

11-L

SYLVANIA ELECTRIC PRODUCTS INC.

TELEVISION PICTURE TUBE DIVISION
SENECA FALLS, NEW YORK

Prepared and Released By The TECHNICAL PUBLICATIONS SECTION EMPORIUM PENNSYLVANIA

JULY, 1954

SYLVANIA

2AP1A

NOTES:

1. *Deflecting Plate 1 is Pin No. 3*
   Deflecting Plate 2 is Pin No. 8
   Deflecting Plate 3 is Pin No. 9
   Deflecting Plate 4 is Pin No. 6
2. *Brilliance and definition decrease with decreasing Anode No. 2 Voltage. In general, Anode No. 2 Voltage should not be less than 500 volts.*
3. *Visual extinction of undeflected focused spot.*
4. *Deflecting Plates 1-2 are nearer the screen.*
5. *Deflecting Plates 3-4 are nearer the base.*

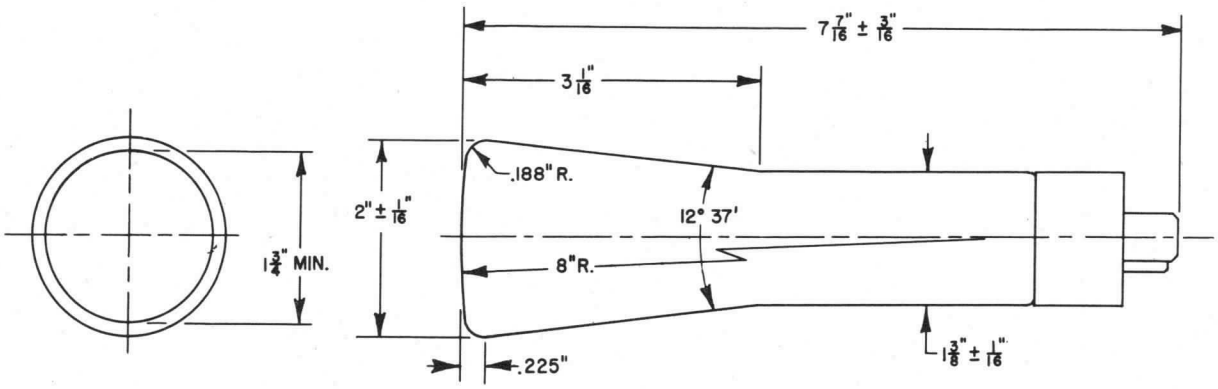

CHARACTERISTICS

GENERAL DATA

Focusing Method	Electrostatic	
Deflecting Method	Electrostatic	
Phosphor	2BP1	2BP11
Fluorescence	Green	Blue
Phosphorescence	—	—
Persistence	Medium	Short
Faceplate	Clear	

*In addition to the types shown, the 2BP- can be supplied with several other screen phosphors.

ELECTRICAL DATA

Heater Voltage	6.3 Volts
Heater Current	0.6 ± 10 % Ampere
Direct Interelectrode Capacitances	
Grid to All Other Electrodes	8 μμf
Between Deflecting Plates 1-2[1]	2 μμf
Between Deflecting Plates 3-4[1]	2 μμf
Deflecting Plate 1 to All Other Electrodes	9 μμf
Deflecting Plate 2 to All Other Electrodes	7 μμf
Deflecting Plate 3 to All Other Electrodes	7 μμf
Deflecting Plate 4 to All Other Electrodes	7 μμf

MECHANICAL DATA

Minimum Useful Screen Diameter	1¾ Inches
Overall Length	7⅝ ± 3/16 Inches
Bulb	J16A
Base (Small Shell Duodecal 10-Pin or 12-Pin)	B10-75 or B12-43
Basing	12E
Weight (Approx.)	¼ Pound

With D1 positive with respect to D2, the spot is deflected toward Pin No. 4; with D3 positive with respect to D4, the spot is deflected toward Pin No. 1.

The plane through the tube axis and Pin No. 4 may vary from the trace produced by D1 and D2 by an angular tolerance (measured about the tube axis) of 10°

The angle between D1-D2 and D3-D4 traces is 90° ± 3°

RATINGS

MAXIMUM RATINGS (Absolute Maximum Values)

Anode No. 2 Voltage	2750 Volts	dc
Anode No. 1 Voltage	1100 Volts	dc
Grid Voltage		
Negative Bias Value	220 Volts	
Positive Peak Value	2 Volts	
Peak Heater-Cathode Voltage		
Heater Negative with Respect to Cathode	140 Volts	
Heater Positive with Respect to Cathode	140 Volts	
Peak Voltage Between Anode No. 2 and Any Deflection Plate	550 Volts	

TYPICAL OPERATING CONDITIONS

Anode No. 2 Voltage[2]	1000	2000 Volts	dc
Anode No. 1 Voltage for Focus	150-280	300-560 Volts	dc
Max. Grid Voltage Required for Cutoff[3]	−67.5	−135 Volts	dc
Deflection Factors:			
Deflecting Plates 1-2[4]	115 to 155	230 to 310 Volts	dc/Inch
Deflecting Plates 3-4[5]	74 to 100	148 to 200 Volts	dc/Inch
Spot Position (Undeflected)[6]		5 mm	

QUICK REFERENCE DATA

Oscilloscope Tube
2″ Direct Viewed
Round Glass Type
Electrostatic Deflection
Electrostatic Focus

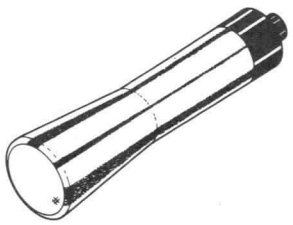

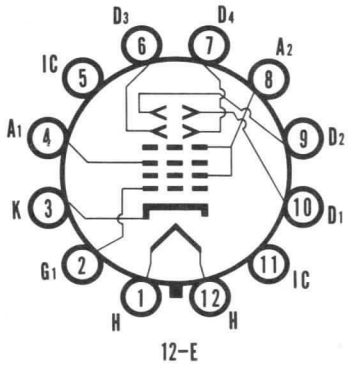

SYLVANIA
ELECTRONIC TUBES
A Division of
Sylvania Electric Products Inc.
PICTURE TUBE OPERATIONS
SENECA FALLS, NEW YORK

Prepared and Released By The
TECHNICAL PUBLICATIONS SECTION
EMPORIUM, PENNSYLVANIA

MARCH, 1962

File Under
SPECIAL AND GENERAL
PURPOSE CATHODE RAY TUBES

CIRCUIT VALUES

Grid Circuit Resistance	1.5 Megohms Max.
Deflection Circuit Resistance	5.0 Megohms Max.

NOTES:

1. *Deflecting Plate 1 is Pin No. 10*
   Deflecting Plate 2 is Pin No. 9
   Deflecting Plate 3 is Pin No. 6
   Deflecting Plate 4 is Pin No. 7
2. *Brilliance and definition decrease with decreasing Anode No. 2 Voltage. In general, Anode No. 2 Voltage should not be less than 500 volts.*
3. *Visual extinction of undeflected focused spot.*
4. *Deflecting Plates 1-2 are nearer the screen.*
5. *Deflecting Plates 3-4 are nearer the base.*
6. *The center of the undeflected, focused spot, will fall within a circle having a 5.0 mm radius concentric with the center of the tube face.*

OUTLINE

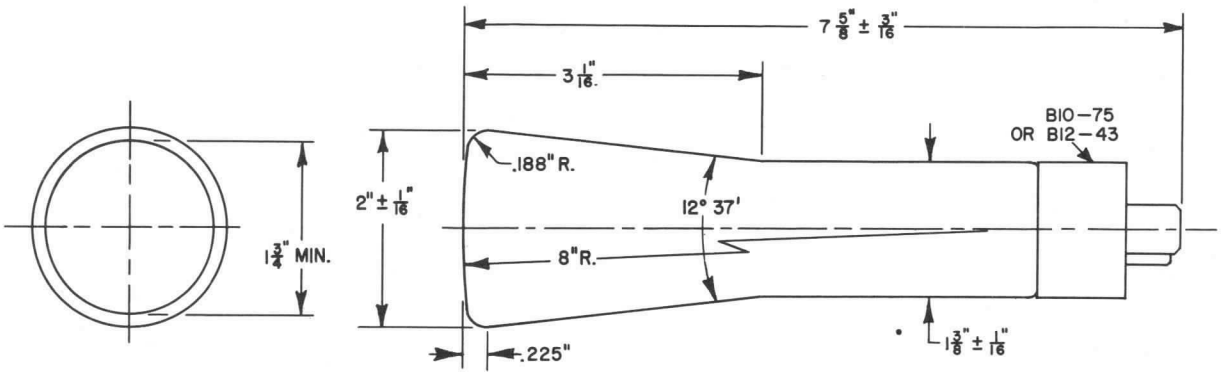

SYLVANIA 3ACP1A 3ACP-A*

CHARACTERISTICS

GENERAL DATA

Focusing Method	Electrostatic
Deflection Method	Electrostatic

Types*	Fluorescence	Phosphorescence	Persistence
3ACP1A	Green	.....	Medium
3ACP2A	Blue-Green	Green	Long
3ACP7A	Blue-White	Yellow	Long
3ACP11A	Blue	.....	Short
3ACP12A	Orange	Orange	Medium Long

Faceplate . . . . . Flat, Clear

**In addition to the types shown, the 3ACP-A can be supplied with several other screen phosphors.*

ELECTRICAL DATA

Heater Voltage	6.3 Volts
Heater Current	0.6 ± 10% Ampere
Direct Interelectrode Capacitances (Maximum)	
Cathode to All Other Electrodes	4.2 μμf
Grid to All Other Electrodes	5.5 μμf
Between Deflecting Plates 1-2	2.1 μμf
Between Deflecting Plates 3-4	1.5 μμf
Deflecting Plate 1 to All Other Electrodes	5.8 μμf
Deflecting Plate 2 to All Other Electrodes	5.8 μμf
Deflecting Plate 3 to All Other Electrodes	4.5 μμf
Deflecting Plate 4 to All Other Electrodes	4.5 μμf

MECHANICAL DATA

Minimum Useful Screen Diameter	2.68 Inches
Bulb Contact (Recessed Small Ball Cap)	J1-22
Bulb	J24V
Base (Medium-Shell Diheptal 12-Pin)	B12-37
Basing	14J
Base Alignment	
D1-D2 trace aligns with Pin No. 5 and Tube Axis	±10 Degrees
Positive Voltage on D1 deflects beam approx. toward Pin No. 5	
Positive Voltage on D3 deflects beam approx. toward Pin No. 2	
Angle between traces D1-D2 and D3-D4	90 ±1 Degrees
Bulb Contact alignment	
J1-22 contact aligns with D1-D2 trace	±10 Degrees
J1-22 contact on same side as Pin No. 5	

QUICK REFERENCE DATA

3" Direct Viewed
Round Glass Type
Electrostatic Deflection
Electrostatic Focus
Close Tolerances
Flat Face Plate
Post Deflection Acceleration

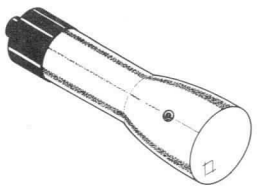

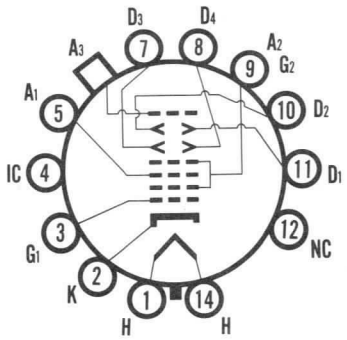

14-J

SYLVANIA
ELECTRONIC TUBES
A Division of
Sylvania Electric Products, Inc.
PICTURE TUBE OPERATIONS
SENECA FALLS, NEW YORK

Prepared and Released By The
TECHNICAL PUBLICATIONS SECTION
EMPORIUM, PENNSYLVANIA

JULY, 1959

RATINGS

MAXIMUM RATINGS (Absolute Maximum Values)

Anode No. 3 Voltage	6600	Volts	dc
Anode No. 2 Voltage	2200	Volts	dc
Ratio Anode No. 3 to Anode No. 2 Voltage[1]	3.0		
Anode No. 2 Input (Av. except for 3ACP12A)	6.0	Watts	
Anode No. 1 Voltage (Focusing Electrode)	1650	Volts	dc
Grid No. 1 Voltage			
Negative Bias Value	220	Volts	dc
Positive Bias Value	0	Volts	dc
Positive Peak Value	0	Volts	
Peak Heater-Cathode Voltage			
Heater Negative with Respect to Cathode	200	Volts	
Heater Positive with Respect to Cathode	200	Volts	
Peak Voltage Between Anode No. 2 and Any Deflection Plate	600	Volts	

TYPICAL OPERATING CONDITIONS[2]

Anode No. 3 Voltage	4000	Volts	dc
Anode No. 2 Voltage	2000	Volts	dc
Anode No. 1 Voltage for Focus	390 to 550	Volts	dc
Grid No. 1 Voltage Required for Cutoff[3]	–45 to –75	Volts	dc
Anode No. 3 Current[4]	500	μa	dc Min.
Cathode Current[5]	125	μa	dc Max.
Cathode Current[6]	600	μa	dc Max.
Deflection Factor			
Deflecting Plates 1-2	175 to 205	Volts	dc/Inch
Deflecting Plates 3-4	138 to 158	Volts	dc/Inch
Deflection Factor Uniformity[7]	2%	Max.	
Pattern Distortion[8]	2%	Max.	
Modulation at Anode No. 3 Current = 25 μAdc[7]	21	Volts	dc Max.
Modulation at Anode No. 3 Current = 200 μAdc[7]			
(Except 3ACP12A)	45	Volts	dc Max.
Line Width "A" at Anode No. 3 Current = 5 μa (3ACP12A)	.012	Inches	Max.
Line Width "A" at Anode No. 3 Current = 50 μAdc[7]			
(Except 3ACP12A)	.016	Inches	Max.
Line Width "A" at Anode No. 3 Current = 200 μAdc[7]			
(Except 3ACP12A)	.028	Inches	Max.
Light Output at Anode No. 3 Current = 100 μAdc[9]			
3ACP1A	80	Foot Lamberts	Min.
3ACP11A	35	Foot Lamberts	Min.

Spot Position (Focused and Undeflected)[10] Within a 3/16 Inch Radius Circle

CIRCUIT VALUES

Grid Circuit Resistance	1.5	Megohms	Max.
Deflection Circuit Resistance[11]	1.0	Megohms	Max.

NOTES:

1. *These types are designed for optimum performance when operating at EB3/EB2 ratio of 2.0.*
2. *Type 3ACP12A can be severely and permanently damaged if current density is allowed to rise too high. Test and operate at minimum usable currents.*
3. *Visual extinction of undeflected focused spot.*
4. *At EG1 = 0 V dc.*
5. *At IB3 = 50 μa dc.*
6. *At IB3 = 200 μa dc.*
7. *Per MIL-E-1 specifications.*
8. *All portions of a raster pattern, adjusted so its widest points just touch the sides of a 1.938 inch square, will fall within the area bounded by the 1.938 inch square and an inscribed 1.862 inch square.*
9. *Measured in accordance with MIL-E-1 specifications using a raster size of 1 7/8 x 1 7/8 inches. The P11 phosphor is measured with a photronic cell without eye correction.*
10. *Centered with respect to tube face and with tube shielded. Connect deflecting plates to Anode No. 2.*
11. *It is recommended that the deflecting electrode circuit resistance be approximately equal. Higher resistance values up to five megohms may be used for low beam current operation.*

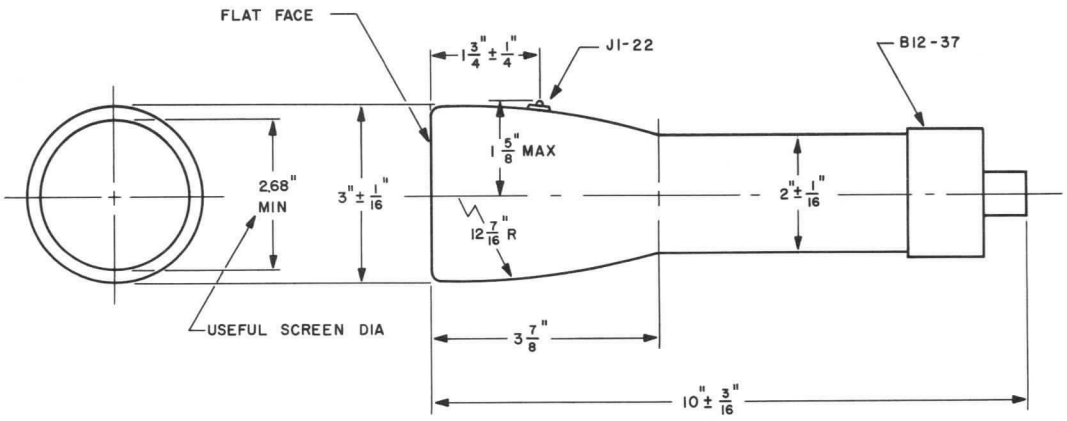

S 58058

A Technical Publication of
SYLVANIA ELECTRIC
PRODUCTS INC.
EMPORIUM, PA.

CHARACTERISTICS

GENERAL DATA

Focusing Method				Electrostatic
Deflection Method				Electrostatic
Types*	**3ADP1**	**3ADP2**	**3ADP7**	**3ADP11**
Fluorescence	Green	Blue-Green	Blue-White	Blue
Phosphorescence	.....	Green	Yellow	.....
Persistence	Medium	Long	Long	Short
Faceplate				Flat, Clear

**In addition to the types shown, the 3ADP- can be supplied with several other screen phosphors.*

ELECTRICAL DATA

Heater Voltage			6.3 Volts
Heater Current			0.6 ± 10% Ampere
Direct Interelectrode Capacitances	**Min.**	**Max.**	
Cathode to All Other Electrodes	3.0	4.5	μμf
Grid No. 1 to All Other Electrodes	5.5	7.2	μμf
Between Deflecting Plates 1-2	1.4	2.0	μμf
Between Deflecting Plates 3-4	0.9	1.5	μμf
Deflecting Plate 1 to All Other Electrodes	3.6	4.6	μμf
Deflecting Plate 2 to All Other Electrodes	3.6	4.6	μμf
Deflecting Plate 3 to All Other Electrodes	2.7	3.6	μμf
Deflecting Plate 4 to All Other Electrodes	2.7	3.6	μμf

MECHANICAL DATA

Minimum Useful Screen Diameter	2.63 Inches
Bulb Contact (Recessed Small Ball Cap)	J1-22
Neck Contacts	J1-25
Base (Small Shell Duodecal 12-Pin)	B12-43
Basing	12Z
Base Alignment	
D1-D2 trace aligns with Pin No. 5 and Tube Axis	±10 Degrees
Positive Voltage on D1 deflects beam approx. toward Pin No. 5	
Positive Voltage on D3 deflects beam approx. toward Pin No. 2	
Angle Between traces D1-D2 and D3-D4	90 ± 1 Degree
Bulb Contact Alignment	
J1-22 Contact aligns with D1-D2 Trace	±10 Degrees
J1-22 Contact on same side as Pin No. 5	

QUICK REFERENCE DATA

3" Direct Viewed
Round Glass Type
Flat, Clear Faceplate
Electrostatic Focus
Electrostatic Deflection
Post Deflection Acceleration
Close Tolerances

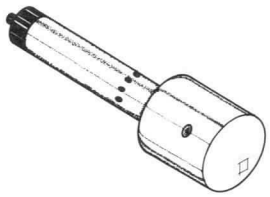

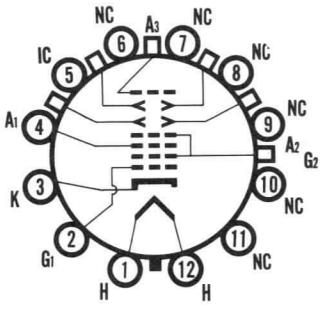

SB 12-Z

SYLVANIA
ELECTRONIC TUBES
A Division of
Sylvania Electric Products, Inc.
PICTURE TUBE OPERATIONS
SENECA FALLS, NEW YORK

Prepared and Released By The
TECHNICAL PUBLICATIONS SECTION
EMPORIUM, PENNSYLVANIA
JULY, 1959

RATINGS

MAXIMUM RATINGS (Absolute Maximum Values)

Anode No. 3 Voltage	6600 Volts dc
Anode No. 2 Voltage[1]	3300 Volts dc
Ratio of Anode No. 3 Voltage to Anode No. 2 Voltage	2 : 1
Anode No. 1 Voltage (Focusing Electrode)	1100 Volts dc
Grid No. 1 Voltage	
Negative Bias Value	220 Volts dc
Positive Bias Value	0 Volts dc
Positive Peak Value	0 Volts
Peak Heater-Cathode Voltage	
Heater Negative with Respect to Cathode	200 Volts
Heater Positive with Respect to Cathode	200 Volts
Peak Voltage Between Anode No. 2 and Any Deflecting Plate	600 Volts

TYPICAL OPERATING CONDITIONS

Anode No. 3 Voltage	4000 Volts
Anode No. 2 Voltage	2000 Volts
Anode No. 1 Voltage for Focus	320 to 470 Volts
Grid No. 1 Voltage Required for Cutoff[2]	−52 to −87 Volts
Deflection Factor	
Deflecting Plates 1-2	140 to 160 Volts dc/Inch
Deflecting Plates 3-4	61 to 70 Volts dc/Inch
Modulation @ Ib3 = 25 μa[3]	38 Volts dc Max.
Line Width "A" @ Ib3 = 25 μa[3]	.014 Inches Max.
Light Output @ Ib3 = 25 μa[4]	
3ADP1[5]	20 Ft. L. Min.
3ADP11[6]	14 Ft. L. Min.
Deflection Factor Uniformity[3]	2 Percent Max.
Pattern Distortion[7]	2 Percent Max.
Undeflected Spot Position[8]	Within a 10 mm Square
Useful Scan	
D1-D2	±1.315 Inches From Tube Face Center or a Total 2.63 Inches Min.
D3-D4	±0.75 Inches From Tube Face Center or a Total 1.5 Inches Min.

CIRCUIT VALUES

Grid No. 1 Circuit Resistance	1.5 Megohms Max.
Deflection Circuit Resistance[9]	1.0 Megohms Max.

NOTES:

1. *The product of the Anode No. 2 Voltage and the Average Anode No. 2 Current should be limited to 6.0 watts.*
2. *Visual extinction of undeflected focused spot.*

NOTES: (Cont'd)

3. *Measured in accordance with MIL-E-1.*
4. *Using a raster size of 2¼ x 1½ inches.*
5. *Using a No. 594 Photronic cell with Viscor filter (for eye correction).*
6. *Using a No. 594 Photronic cell without Viscor filter (without eye correction).*
7. *All edges of a raster, pattern adjusted so its widest points just touch the sides of 2.295 x 1.530 inch rectangle, will fall within the area bounded by the 2.295 x 1.530 inch rectangle and an inscribed 2.205 x 1.470 inch rectangle.*
8. *With the tube shielded and with all deflection plates connected to Anode No. 2. Limit square centered on tube face, sides parallel to deflection axes.*
9. *It is recommended that the deflecting electrode circuit resistances be approximately equal.*

WARNING:

X-ray radiation shielding may be necessary to protect against possible danger of personal injury from prolonged exposure at close range if this tube is operated at higher than the manufacturer's Maximum Rated Anode Voltage or 16,000 volts, whichever is less.

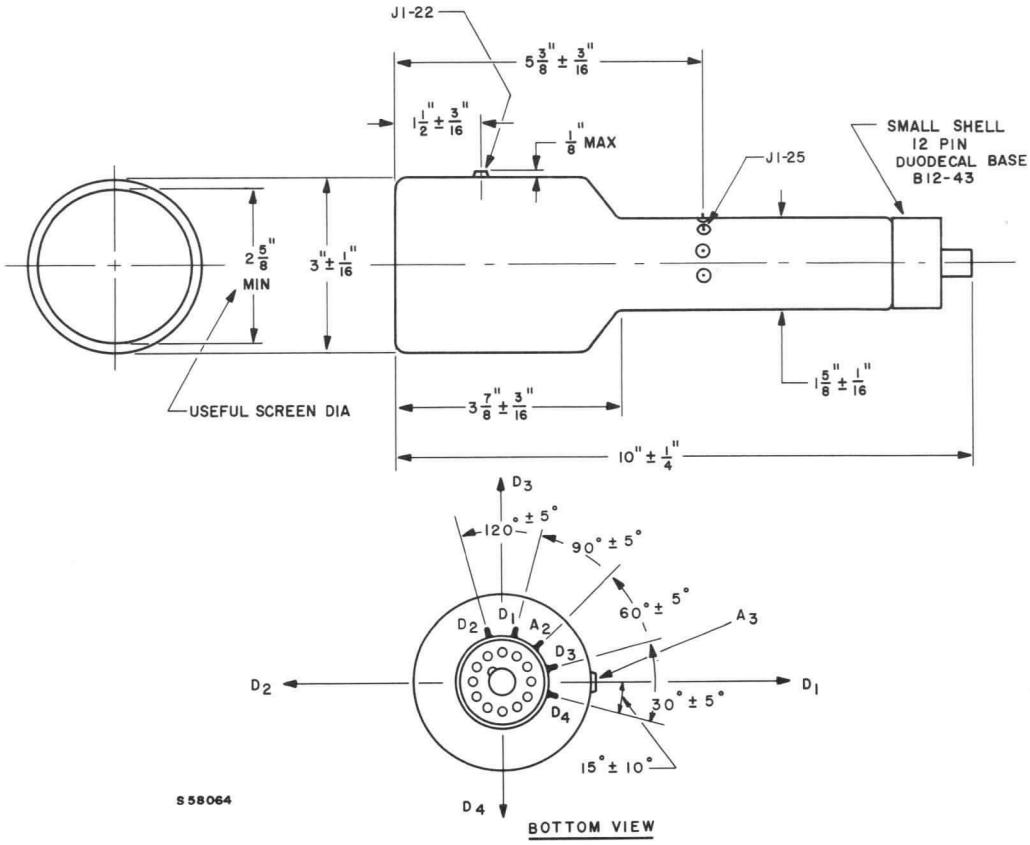

A Technical Publication of
SYLVANIA ELECTRIC
PRODUCTS INC.
EMPORIUM, PA.

SYLVANIA

engineering data service

SYLVANIA
3AP1A
3AP-A*

CHARACTERISTICS

GENERAL DATA

Focusing Method	Electrostatic
Deflecting Method	Electrostatic
Phosphor	P1
Fluorescence	Green
Persistence	Medium
Faceplate	Clear

**In addition to the type shown, the 3AP-A* can be supplied with several other screen phosphors.*

ELECTRICAL DATA

Heater Voltage	2.5 Volts
Heater Current (Approx.)	2.1 Ampere
Direct Interelectrode Capacitances (Approx.)	
Grid No. 1 to All Other Electrodes	9 $\mu\mu$f
Deflecting Plate 1[1] to All Other Electrodes	8.5 $\mu\mu$f
Deflecting Plate 3[1] to All Other Electrodes	6.5 $\mu\mu$f

MECHANICAL DATA

Minimum Useful Screen Diameter	2¾ Inches
Nominal Overall Length	11½ Inches
Base	Medium 7-Pin
Basing	7CE

RATINGS

MAXIMUM RATINGS (Absolute Maximum Values)

Anode No. 2 Voltage	1650 Volts	dc
Anode No. 1 Voltage	1100 Volts	dc
Grid No. 1 Voltage		
Negative Bias Value	125 Volts	dc
Positive Bias Value	0 Volts	dc
Peak Voltage Between Anode No. 2 and Any Deflecting Plate	550 Volts	

TYPICAL OPERATING CONDITIONS

Anode No. 2 Voltage[2]	1500 Volts	dc
Anode No. 1 Voltage	240 to 560 Volts	dc
Grid No. 1 Voltage Required for Cutoff[3]	−25 to −75 Volts	dc
Deflection Factor[4,5]		
Deflecting Plates 1-2[6]	90 to 137 Volts dc/Inch	
Deflecting Plates 3-4[7]	88 to 130 Volts dc/Inch	

CIRCUIT VALUES

Grid No. 1 Circuit Resistance	1.5 Megohms Max.
Deflection Circuit Resistance	5.0 Megohms Max.

QUICK REFERENCE DATA

3" Direct Viewed
Round Glass Type
Electrostatic Deflection
Electrostatic Focus

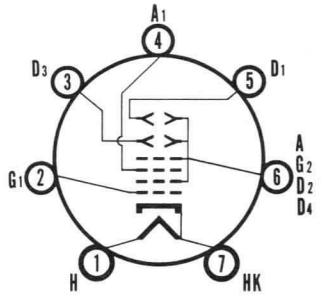

7-CE

SYLVANIA
ELECTRONIC TUBES
A Division of
Sylvania Electric Products Inc.
PICTURE TUBE OPERATIONS
SENECA FALLS, NEW YORK

Prepared and Released By The
TECHNICAL PUBLICATIONS SECTION
EMPORIUM, PENNSYLVANIA
NOVEMBER, 1958

NOTES:

1. *With D2 positive with respect to D1, the spot is deflected toward Pin No. 1. With D4 positive with respect to D3, the spot is deflected toward Pin No. 6.*
2. *Brilliance and definition decrease with decreasing Anode No. 2 Voltage. In general, Anode No. 2 Voltage should not be less than 1,000 Volts.*
3. *Visual extinction of undeflected focused spot.*
4. *The plane through the tube axis and Pin 6 may vary from the trace produced by Deflecting Plates 3-4 by an angular tolerance measured about the tube axis; of 10 degrees.*
5. *Angle between D1-D2 trace and D3-D4 trace is 90° ± 3°.*
6. *Deflecting Plates 1-2 are nearer the screen.*
7. *Deflecting Plates 3-4 are nearer the base.*

3AP1

Sylvania Type 3AP1A replaces Type 3AP1.

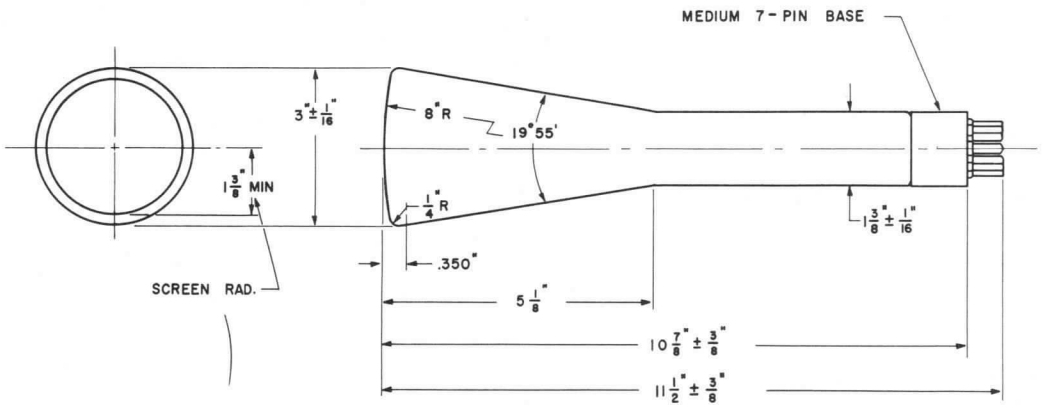

S 58002

SYLVANIA

engineering data service

SYLVANIA
3AQP1
3AQP*

CHARACTERISTICS

GENERAL DATA

Focusing Method	Electrostatic
Deflection Method	Electrostatic

Types*	Fluorescence	Phosphorescence	Persistence
3AQP1	Green	———	Medium
3AQP2	Blue - Green	Green	Long
3AQP7	Blue - White	Yellow	Long
3AQP11	Blue	———	Short

Faceplate . . . . . Clear, Spherical

* In addition to the types shown, the 3AQP — can be supplied with several other screen phosphors.

ELECTRICAL DATA

Heater Voltage	6.3 Volts
Heater Current	0.6 ± 10% Ampere
Direct Interelectrode Capacitances (approx.)	
Cathode to All Other Electrodes	4.3 μμf
Grid No. 1 to All Other Electrodes	7.5 μμf
Between Deflecting Plates 1-2	5.2 μμf
Between Deflecting Plates 3-4	7.0 μμf
Deflecting Plate 1 to All Other Electrodes	10.1 μμf
Deflecting Plate 2 to All Other Electrodes	7.5 μμf
Deflecting Plate 3 to All Other Electrodes	8.1 μμf
Deflecting Plate 4 to All Other Electrodes	9.2 μμf

MECHANICAL DATA

Minimum Useful Screen Diameter	2 ¾ Inches
Base (Small Shell Duodecal 12-Pin)	B12-43
Basing	12E
Bulb	J24P1
Base Alignment	
D1-D2 Trace Aligns with Pin No. 4 and Tube Axis	± 10 Degrees
Positive Voltage on D1 deflects Beam approx. Toward Pin No. 4	
Positive Voltage on D3 deflects Beam approx. Toward Pin No. 1	
Angle Between D3-D4 and D1-D2 Traces	90 ± 1 Degree
Weight (approx.)	½ Pound

RATINGS

MAXIMUM RATINGS (Absolute Maximum Values)

Anode No. 2 Voltage	3000 Volts dc
Anode No. 2 Input	6.0 Watts
Anode No. 1 Voltage (Focusing Electrode)	1200 Volts dc
Grid No. 1 Voltage	
Negative Bias Value	220 Volts dc
Positive Bias Value	0 Volts dc
Positive Peak Value	2 Volts
Peak Heater-Cathode Voltage	
Heater Negative with Respect to Cathode	
During Warm-up Period Not to Exceed 15 Seconds	450 Volts
After Equipment Warm-up	140 Volts
Heater Positive with Respect to Cathode	140 Volts
Peak Voltage Between Anode No. 2 and Any Deflection Plate	600 Volts

QUICK REFERENCE DATA

3" Direct Viewed
Round Glass Type
Electrostatic Deflection
Electrostatic Focus
Clear, Spherical Faceplate
High Deflection Sensitivity

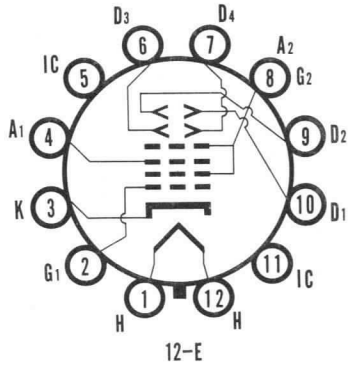

12-E

SYLVANIA
ELECTRONIC TUBES
A Division of
Sylvania Electric Products Inc.
PICTURE TUBE OPERATIONS
SENECA FALLS, NEW YORK

Prepared and Released By The
TECHNICAL PUBLICATIONS SECTION
EMPORIUM, PENNSYLVANIA

APRIL, 1960

File Under
SPECIAL AND GENERAL PURPOSE
CATHODE RAY TUBES

TYPICAL OPERATING CONDITIONS

Anode No. 2 Voltage[1]	2000 Volts dc
Anode No. 1 Voltage for Focus	330 to 620 Volts dc
Grid Voltage Required for Cutoff[2]	−58 to −135 Volts dc
Deflection Factors	
Deflecting Plates 1-2[3]	146 to 198 Volts dc/Inch
Deflecting Plates 3-4[4]	52 to 70 Volts dc/Inch
Useful Scan	
D1-D2[5]	2 ¾ Inches Min
D3-D4[5]	2 ¼ Inches Min
Spot Position (Undeflected, Focused)[6]	Within a 12 mm Square

CIRCUIT VALUES

Grid Circuit Resistance	1.5 Megohms Max.
Deflection Circuit Resistance[7]	1.0 Megohms Max.

NOTES:

1. *Operation of Type 3AQP7 at Anode Voltages of less than 1000 volts is not recommended.*
2. *Visual extinction of undeflected focused spot.*
3. *Deflecting Plates 1-2 are nearer the screen.*
4. *Deflecting Plates 3-4 are nearer the base.*
5. *Useful scan to be centered with respect to the tube face.*
6. *With the tube shielded and all deflection plates connected to Anode No. 2. Limit square centered on tube face, with sides parallel to deflection axes.*
7. *The resistances in each deflecting plate circuit should be approximately equal.*

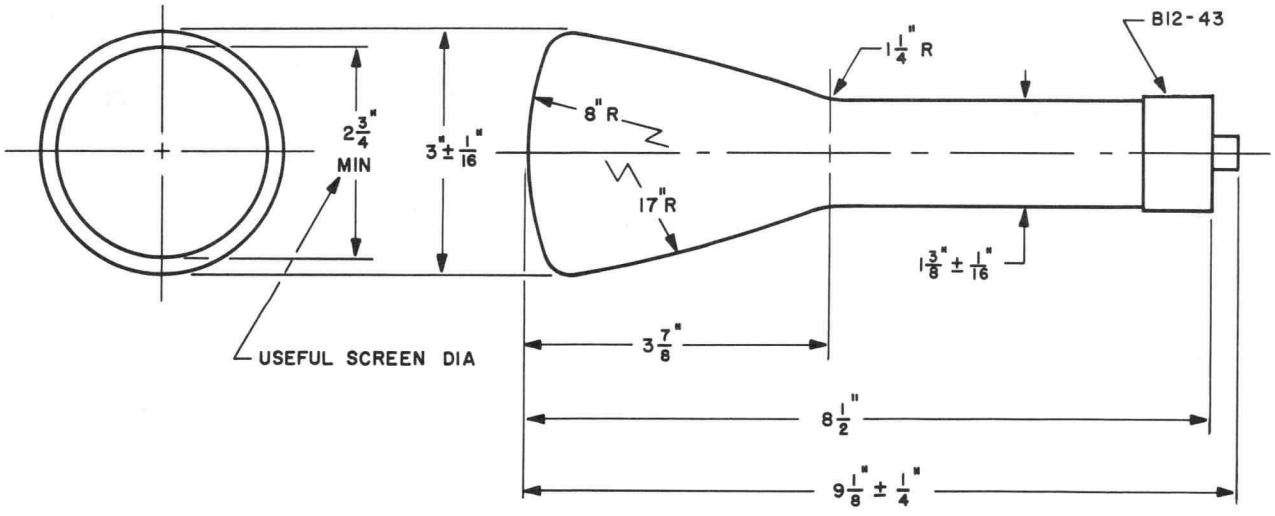

S58062

SYLVANIA

engineering data service

SYLVANIA
3ASP1
3ASP*

CHARACTERISTICS

GENERAL DATA

Focusing Method	Electrostatic
Deflection Method	Electrostatic

Types*	Fluorescence	Phosphorescence	Persistence
3ASP1	Green	.....	Medium
3ASP2	Blue-Green	Green	Long
3ASP11	Blue	.....	Short

Faceplate . . . . . Flat, Clear

**In addition to the types shown, the 3ASP- can be supplied with several other screen phosphors.*

ELECTRICAL DATA

Heater Voltage	6.3 Volts
Heater Current	0.6 ± 10% Ampere
Direct Interelectrode Capacitances (approx.)	
Grid No. 1 to All Other Electrodes	4.5 μμf
Between Deflection Plates 1-2	2.0 μμf
Between Deflection Plates 3-4	2.5 μμf
Deflection Plate 1 to All Other Electrodes	6.5 μμf
Deflection Plate 2 to All Other Electrodes	6.0 μμf
Deflection Plate 3 to All Other Electrodes	5.5 μμf
Deflection Plate 4 to All Other Electrodes	5.5 μμf

MECHANICAL DATA

Minimum Useful Screen Dimensions	
Horizontal	2¾ Inches
Vertical	1⅛ Inches
Bulb	LEA 448 or Equiv.
Base	B8-218
Basing	8KF
Anode No. 2 Contact	J1-22

Base Alignment

Pin #3 aligns with major axis of tube face within 10°, and is on same side as anode contact (J1-22)

Trace Alignment

Positive Voltage on D1 (Pin #2) with respect to D2, (Pin #1) deflects spot approximately toward Pin #3.

Positive Voltage on D3 (Pin #6) with respect to D4, (Pin #7) deflects spot approximately toward Pin #5.

Angle between D1-D2 and D3-D4 traces	90 ± 1 Degree
Angle between D1-D2 and major axis of tube face	0 ± 1½ Degrees

Deflection Plates

D1 and D2 are nearer to the tube face

D3 and D4 are nearer the base

QUICK REFERENCE DATA

1½" x 3" Direct Viewed
Rectangular Glass Type
Clear, Pressed Faceplate
Electrostatic Deflection
Electrostatic Focus
High Deflection Sensitivity

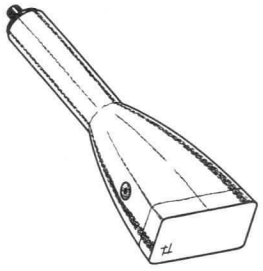

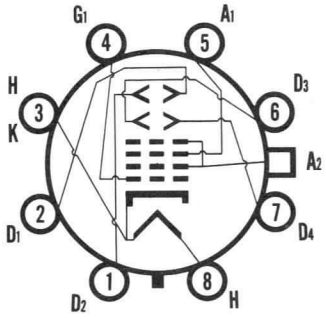

8 K F

SYLVANIA
ELECTRONIC TUBES

A Division of
Sylvania Electric Products Inc.

PICTURE TUBE OPERATIONS
SENECA FALLS, NEW YORK

Prepared and Released By The
TECHNICAL PUBLICATIONS SECTION
EMPORIUM, PENNSYLVANIA

MARCH, 1960

File Under
SPECIAL AND GENERAL PURPOSE
CATHODE RAY TUBES

RATINGS

MAXIMUM RATINGS (Absolute Maximum Values)

Anode No. 2 Voltage	3000	Volts	dc
Anode No. 2 Input	6.0	Watts	
Anode No. 1 Voltage (Focusing Electrode)	1200	Volts	dc
Grid No. 1 Voltage			
Negative Bias Value	140	Volts	dc
Positive Bias Value	0	Volts	dc
Positive Peak Value	2	Volts	
Peak Voltage between Anode No. 2 and Any Deflection Plate	600	Volts	
Altitude	35,000	Feet	

TYPICAL OPERATING CONDITIONS

Anode No. 2 Voltage	2000	Volts	dc
Anode No. 1 Voltage for Focus	400 to 700	Volts	dc
Grid No. 1 Voltage Required for Cutoff[1]	–40 to –70	Volts	dc
Deflection Factors			
Deflection Plates 1-2	68 to 92	Volts	dc/Inch
Deflection Plates 3-4	28 to 38	Volts	dc/Inch
Spot Position (Undeflected, Focused)[2]	Within a 15	mm Square	
P1 Light Output[4]	20	Ft. L.	Min.
Modulation[5]	38	Volts	dc Max.
Line Width A[6]	0.65	mm Max.	

CIRCUIT VALUES

Grid No. 1 Circuit Resistance	1.5	Megohms	Max.
Deflection Circuit Resistance[3]	1.0	Megohms	Max.

NOTES:

1. *Visual extinction of undeflected focused spot.*
2. *With the tube shielded and with the deflection plates connected to Anode No. 2, the square shall be centered on the tube face with its sides parallel to the deflection axis.*
3. *It is recommended that the deflecting electrode circuit resistances be approximately equal.*
4. *Raster size 1 1/8" x 1 9/16".*
5. *Measured at 20 Ft. L. on a raster 1 1/8" x 1 9/16".*
6. *Measured by compressed raster method starting with conditions of Note 5.*

OUTLINE

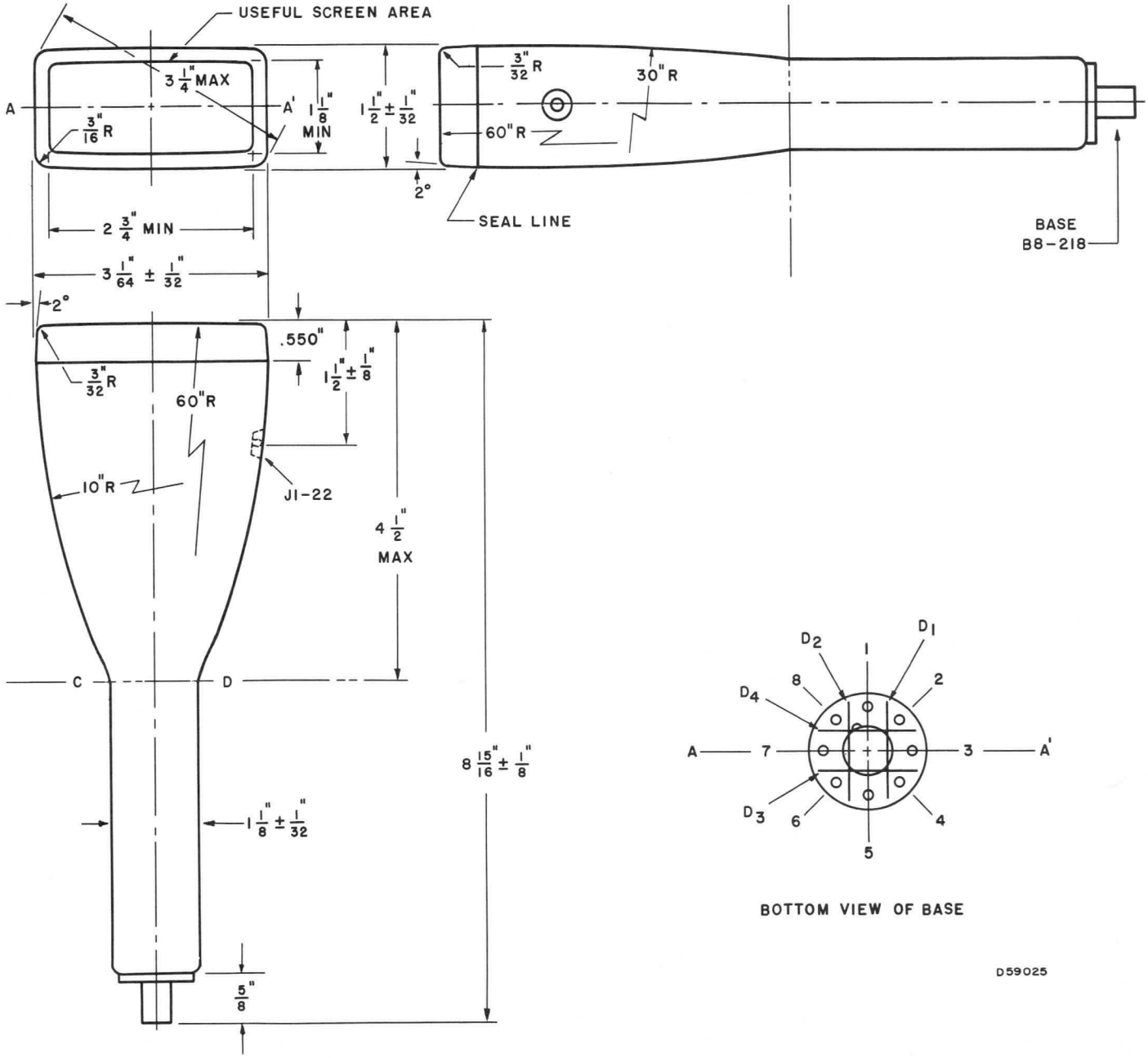

BOTTOM VIEW OF BASE

D59025

SYLVANIA

engineering data service

SYLVANIA
3BEP1
3BEP-*

DESCRIPTION

Sylvania 3BEP- is a compact, rectangular direct-view oscilloscope tube designed primarily for use in airborne equipment. It features a high quality, nearly flat pressed faceplate, and employs electrostatic focus and deflection. Its encapsulated leads permit operation at high altitude and it will withstand a wide range of temperatures.

CHARACTERISTICS

GENERAL DATA

Focusing Method	Electrostatic
Deflecting Method	Electrostatic

Types*	Fluorescence	Phosphorescence	Persistence
P1	Green	———	Medium

Faceplate . . . . . Clear, Pressed Glass

* In addition to the type shown, the 3BEP- can be supplied with several other screen phosphors.

ELECTRICAL DATA

Heater Voltage	6.3 Volts
Heater Current	0.6 ± 10% Ampere
Direct Interelectrode Capacitances (Approx.)	
Cathode to All Other Electrodes	5 μμf
Grid No. 1 to All Other Electrodes	8 μμf
Between Deflecting Plates 1-2	7 μμf
Between Deflecting Plates 3-4	6 μμf
Deflecting Plate 1 to All	9 μμf
Deflecting Plate 2 to All	8 μμf
Deflecting Plate 3 to All	7 μμf
Deflecting Plate 4 to All	8 μμf

MECHANICAL DATA

Minimum Useful Screen Dimensions (Maximum Assured)	
Horizontal	2 3/4 Inches
Vertical	1 1/8 Inches
Bulb	LEA 417 or Equivalent
Base	Encapsulated, Color Coded Leads
Trace Alignment with Bulb (See Diagram)	
D1-D2 Trace aligns with long axis of tube face[1]	± 1.5 Degrees
Angle between D1-D2 trace and D3-D4 trace	90 ± 1 Degrees
Weight (Approx.)	3/4 Pounds

RATINGS

MAXIMUM RATINGS (Absolute Maximum Values)

Anode No. 2 Voltage	3000 Volts	dc
Anode No. 1 Voltage (Focusing Electrode)	1200 Volts	dc
Grid No. 1 Voltage		
Negative Bias Value	140 Volts	dc
Positive Bias Value	0 Volts	dc
Positive Peak Value	2 Volts	
Peak Heater-Cathode Voltage		
Heater Negative with Respect to Cathode.	140 Volts	
Heater Positive with Respect to Cathode.	140 Volts	
Altitude	70,000 Feet	
Operating Temperature Range	−65 to +85 °C	

QUICK REFERENCE DATA

Oscilloscope Tube
1½" x 3" Direct Viewed
Rectangular Glass Type
Electrostatic Deflection
Electrostatic Focus
High Quality, Clear, Pressed Faceplate
Encapsulated Base with color coded leads.

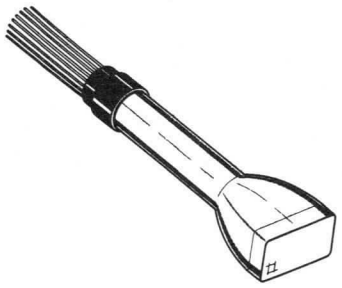

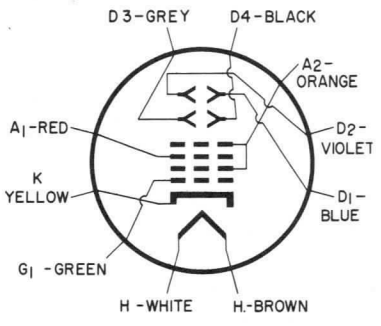

3BEP1

SYLVANIA
ELECTRONIC TUBES
A Division of
Sylvania Electric Products Inc.
PICTURE TUBE OPERATIONS
SENECA FALLS, NEW YORK

Prepared and Released By The
TECHNICAL PUBLICATIONS SECTION
EMPORIUM, PENNSYLVANIA

APRIL, 1960

File Under
SPECIAL AND GENERAL PURPOSE
CATHODE RAY TUBES

TYPICAL OPERATING CONDITIONS

Anode No. 2 Voltage	1500 Volts	dc
Anode No. 1 Voltage for Focus	247 to 465 Volts	dc
Grid No. 1 Voltage Required for Cutoff[2]	−43.5 to −101 Volts	dc
Deflection Factors		
Deflecting Plates 1-2[3]	109 to 149 Volts	dc/Inch
Deflecting Plates 3-4[4]	78 to 105 Volts	dc/Inch
Spot Position (Focused, Undeflected)[5]	Within a 7.5 mm Square	

CIRCUIT VALUES

Grid No. 1 Circuit Resistance	1.5 Megohms Max.
Resistance in Any Deflecting Electrode Circuit[6]	1.0 Megohms Max.

NOTES:

1. *The D1-D2 trace scanning through the geometric center of the tube face will be parallel to the long axis of the tube faces within the limits specified.*
2. *Visual extinction of undeflected focused spot.*
3. *Deflecting Plates 1 and 2 are nearer the screen and scan the major dimension of the screen.*
4. *Deflecting Plates 3 and 4 are nearer the base and scan the minor dimension of the screen.*
5. *With deflecting plates connected to Anode No. 2 and with tube shielded, the sides of the limit square will be parallel to the deflection axes.*
6. *It is recommended that the deflecting electrode circuit resistances be approximately equal.*

OUTLINE

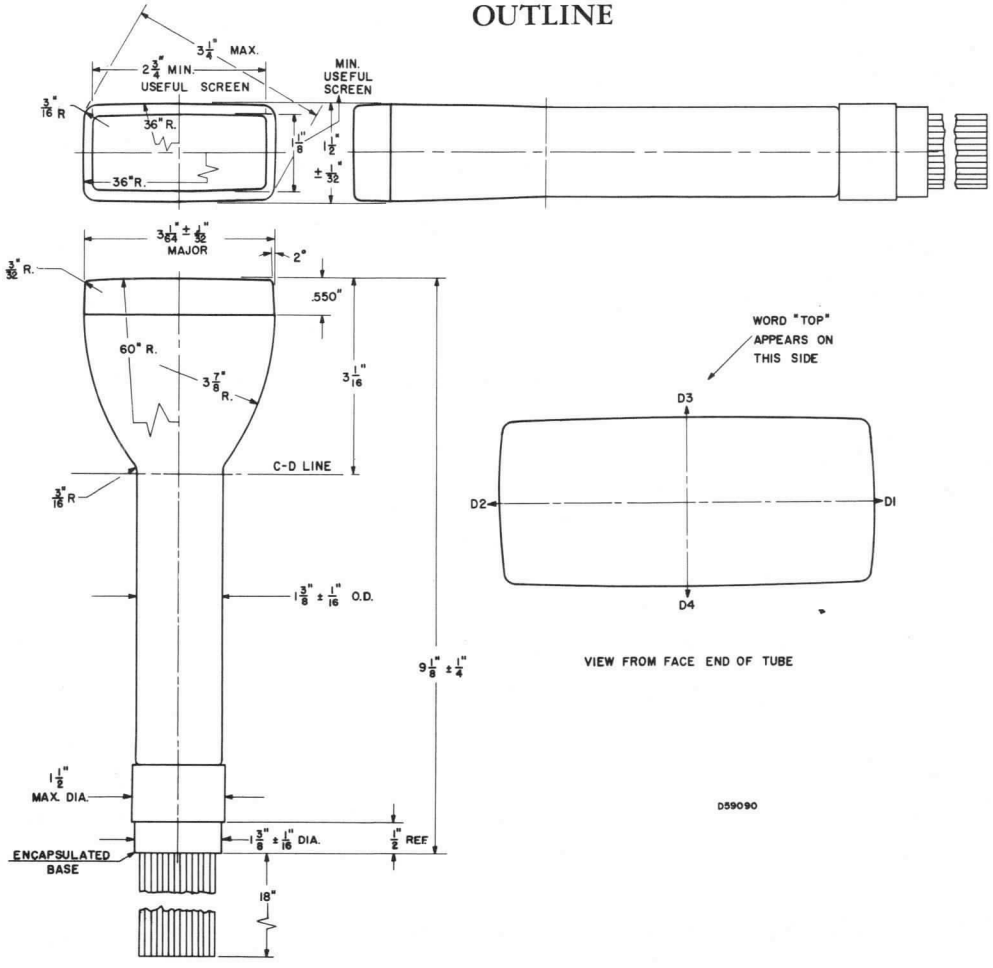

SYLVANIA

engineering data service

SYLVANIA
3BGP1
3BGP*

DESCRIPTION

Sylvania 3BGP1 is a compact, rectangular direct view oscilloscope tube designed for portable oscilloscope and radar applications. It features a high efficiency 1.5 v, 140 ma heater for battery economy and lightweight design. This low heater power design requires only $\frac{1}{16}$ of the power necessary to operate a conventional 6.3 v, 600 ma heater.

CHARACTERISTICS

GENERAL DATA

Focusing Method	Electrostatic
Deflection Method	Electrostatic

Types*	Fluorescence	Phosphorescence	Persistence
3BGP1	Green	——	Medium
3BGP2	Blue-Green	Green	Long
3BGP7	Blue-White	Yellow	Long
3BGP11	Blue	——	Short

Faceplate	Flat, Clear

*In addition to the types shown, the 3BGP- can be supplied with several other screen phosphors.

ELECTRICAL DATA

Heater Voltage	1.5 Volts
Heater Current	0.140 ± 10% Ampere
Direct Interelectrode Capacitances (approx.)	
Grid No. 1 to All Other Electrodes	4.5 μμf
Between Deflection Plates 1-2	2.0 μμf
Between Deflection Plates 3-4	2.5 μμf
Deflection Plate 1 to All Other Electrodes	6.5 μμf
Deflection Plate 2 to All Other Electrodes	6.0 μμf
Deflection Plate 3 to All Other Electrodes	5.5 μμf
Deflection Plate 4 to All Other Electrodes	5.5 μμf

MECHANICAL DATA

Minimum Useful Screen Dimensions	
Horizontal	2¾ Inches
Vertical	1⅛ Inches
Bulb	LEA 448 or Equiv.
Base	B8-181
Basing	8KF
Anode No. 2 Contact	J1-22

Base Alignment

Pin #3 aligns with major axis of tube face within 10°, and is on same side as anode contact (J1-22).

Trace Alignment

Positive Voltage on D1 (Pin #2) with respect to D2, (Pin #1) deflects spot approximately toward Pin #3.

Positive Voltage on D3 (Pin #6) with respect to D4, (Pin #7) deflects spot approximately toward Pin #5.

QUICK REFERENCE DATA

1½" x 3" Direct Viewed
Rectangular Glass Type
Clear, Pressed Faceplate
Electrostatic Deflection
Electrostatic Focus
High Deflection Sensitivity
Very Low Heater Power

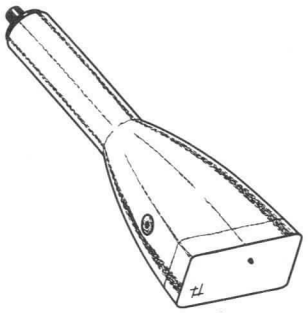

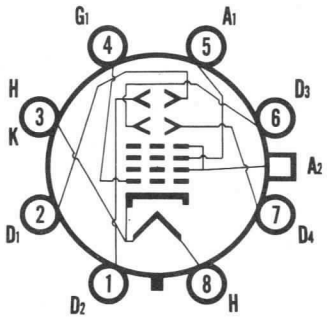

8 K F

SYLVANIA
ELECTRONIC TUBES
A Division of
Sylvania Electric Products Inc.
PICTURE TUBE OPERATIONS
SENECA FALLS, NEW YORK

Prepared and Released By The
TECHNICAL PUBLICATIONS SECTION
EMPORIUM, PENNSYLVANIA

JULY, 1960

File Under
SPECIAL AND GENERAL PURPOSE
CATHODE RAY TUBES

MECHANICAL DATA (Continued)

Angle between D1-D2 and D3-D4 traces	90 ± 1 Degree
Angle between D1-D2 trace and major axis of tube face	0 ± 1½ Degrees
Deflection Plates	
D1 and D2 are nearer to the tube face	
D3 and D4 are nearer the base	

RATINGS

MAXIMUM RATINGS (Absolute Maximum Values)

Anode No. 2 Voltage	2750 Volts dc
Anode No. 2 Input	6.0 Watts
Anode No. 1 Voltage (Focusing Electrode)	1100 Volts dc
Grid No. 1 Voltage	
Negative Bias Value	200 Volts dc
Positive Bias Value	0 Volts dc
Positive Peak Value	2 Volts
Peak Voltage between Anode No. 2 and Any Deflection Plate	550 Volts
Altitude	35,000 Feet

TYPICAL OPERATING CONDITIONS

Anode No. 2 Voltage	2000 Volts dc
Anode No. 1 Voltage for Focus	400 to 700 Volts dc
Grid No. 1 Voltage Required for Cutoff[1]	–38 to –67½ Volts dc
Deflection Factors	
Deflection Plates 1-2	68 to 92 Volts dc/Inch
Deflection Plates 3-4	28 to 38 Volts dc/Inch
Spot Position (Undeflected, Focused)[2]	Within a 15 mm Square
P1 Light Output[4]	20 Ft. L. Min.
Modulation[5]	38 Volts dc Max.
Line Width A[6]	0.65 mm Max.

CIRCUIT VALUES

Grid No. 1 Circuit Resistance	1.5 Megohms Max.
Deflection Circuit Resistance[3]	1.0 Megohms Max.

NOTES:

1. *Visual extinction of undeflected focused spot.*
2. *With the tube shielded and with the deflection plates connected to Anode No. 2. The square shall be centered on the tube face with its sides parallel to the deflection axes.*
3. *It is recommended that the deflecting electrode circuit resistances be approximately equal.*
4. *Raster size 1⅛" x 1-9/16".*
5. *Measured at 20 Ft. L. on a raster 1⅛" x 1-9/16".*
6. *Measured by compressed raster method starting with conditions of Note 5.*

OUTLINE

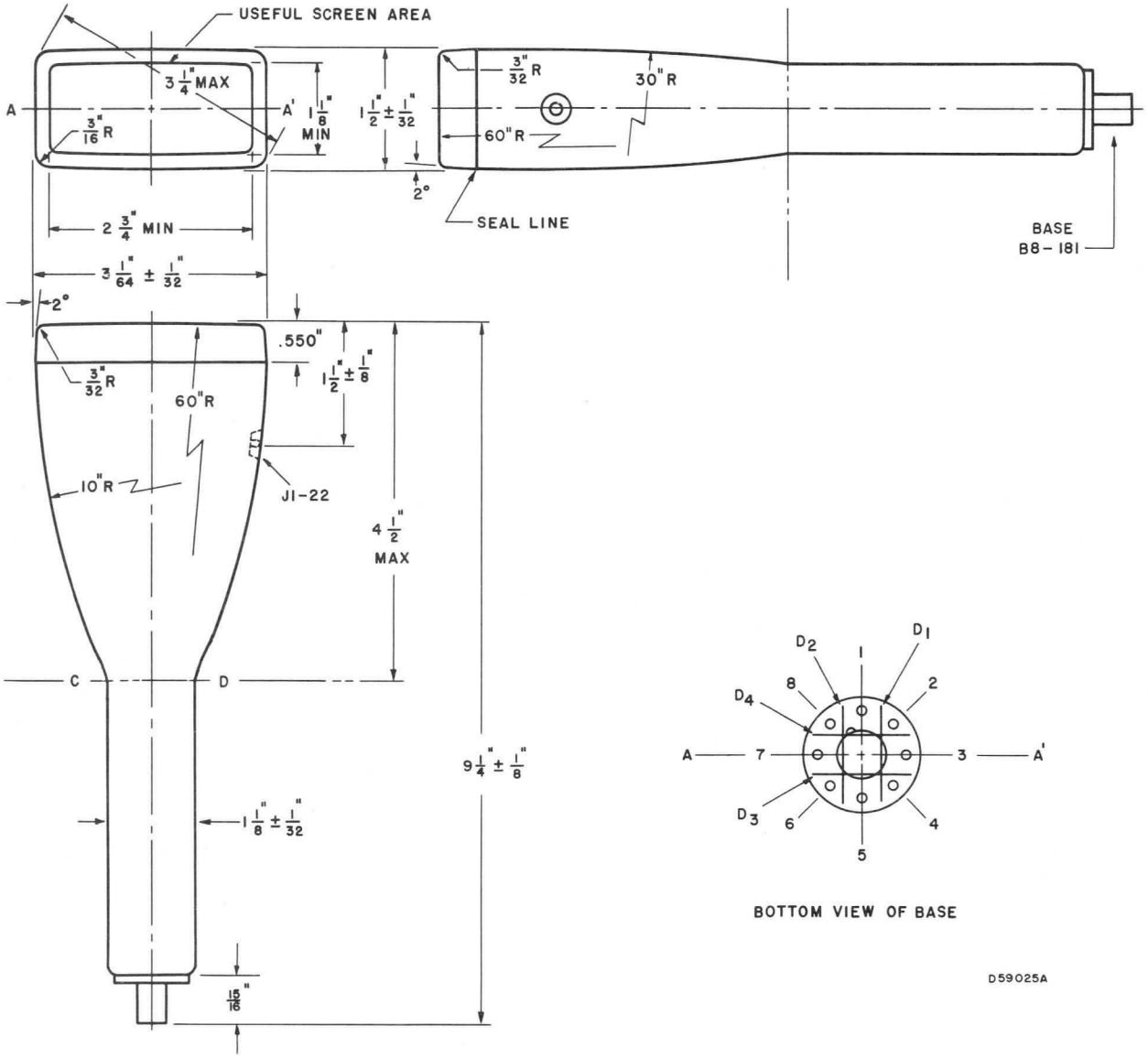

BOTTOM VIEW OF BASE

D59025A

SYLVANIA

engineering data service

SYLVANIA
3BMP1
3BMP-

CHARACTERISTICS

GENERAL DATA

Focusing Method	Electrostatic
Deflection Method	Electrostatic

Types*	Fluorescence	Phosphorescence	Persistence
3BMP1	Green	——	Medium
3BMP2	Blue - Green	Green	Long
3BMP7	Blue - White	Yellow	Long
3BMP11	Blue	——	Short
3BMP12	Orange	Orange	Medium Long

Faceplate . . . . . Flat, Clear

* In addition to the types shown, the 3BMP- can be supplied with several other screen phosphors.

ELECTRICAL DATA

Heater Voltage	1.5	Volts
Heater Current	0.14 ±10%	Ampere
Direct Interelectrode Capacitances (Maximum)		
Cathode to All Other Electrodes	4.2	μμf
Grid to All Other Electrodes	5.8	μμf
Between Deflecting Plates 1-2	2.1	μμf
Between Deflecting Plates 3-4	1.5	μμf
Deflecting Plate 1 to All Other Electrodes	5.8	μμf
Deflecting Plate 2 to All Other Electrodes	5.8	μμf
Deflecting Plate 3 to All Other Electrodes	4.5	μμf
Deflecting Plate 4 to All Other Electrodes	4.5	μμf

MECHANICAL DATA

Minimum Useful Screen Diameter	2.68	Inches
Bulb Contact (Recessed Small Ball Cap)	J1-22	
Bulb	J24V	
Base (Medium-Shell Diheptal 12-Pin)	B12-37	
Basing	14J	
Base Alignment		
D1-D2 trace aligns with Pin No. 5 and Tube Axis Positive Voltage on D1 deflects beam approx. toward Pin No. 5 Positive Voltage on D3 deflects beam approx. toward Pin No. 2	±10	Degrees
Angle between traces D1-D2 and D3-D4	90 ±1	Degrees
Bulb Contact Alignment		
J1-22 contact aligns with D1-D2 trace J1-22 contact on same side as Pin No. 5	±10	Degrees

RATINGS

MAXIMUM RATINGS (Absolute Maximum Values)

Anode No. 3 Voltage	6600	Volts	dc
Anode No. 2 Voltage	2200	Volts	dc
Ratio Anode No. 3 to Anode No. 2 Voltage[1]	3.0		
Anode No. 2 Input (Av. except for 3BMP12)[2]	6.0	Watts	
Anode No. 1 Voltage (Focusing Electrode)	1500	Volts	dc
Grid No. 1 Voltage			
Negative Bias Value	200	Volts	dc
Positive Bias Value	0	Volts	dc
Positive Peak Value	0	Volts	
Peak Heater-Cathode Voltage			
Heater Negative with Respect to Cathode	50	Volts	
Heater Positive with Respect to Cathode	0	Volts	
Peak Voltage Between Anode No. 2 and Deflection Plate	550	Volts	

QUICK REFERENCE DATA

3″ Direct Viewed
Round Glass Type
Electrostatic Deflection
Electrostatic Focus
Close Tolerances
Flat Face Plate
Post Deflection Acceleration
Very Low Heater Power

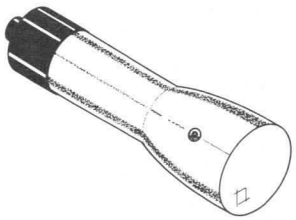

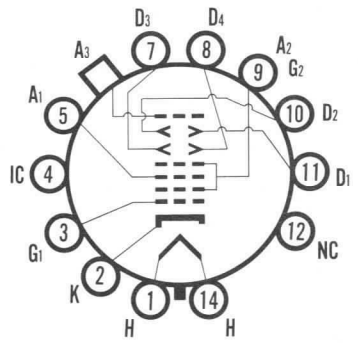

SYLVANIA
ELECTRONIC TUBES
A Division of
Sylvania Electric Products Inc.

PICTURE TUBE OPERATIONS
SENECA FALLS, NEW YORK

Prepared and Released By The TECHNICAL PUBLICATIONS SECTION EMPORIUM, PENNSYLVANIA

SEPTEMBER, 1960

File Under
SPECIAL AND GENERAL PURPOSE CATHODE RAY TUBES

TYPICAL OPERATING CONDITIONS[2]

Anode No. 3 Voltage	4000 Volts	dc
Anode No. 2 Voltage	2000 Volts	dc
Anode No. 1 Voltage for Focus	375 to 575 Volts	dc
Grid No. 1 Voltage Required for Cutoff[3]	–45 to –75 Volts	dc
Deflection Factor		
Deflecting Plates 1-2	180 to 220 Volts	dc/Inch
Deflecting Plates 3-4	133 to 163 Volts	dc/Inch
Deflection Factor Uniformity[4]	2%	Max.
Pattern Distortion[5]	2%	Max.
Modulation at Anode No. 3 Current = 25μAdc[4]	38 Volts	dc Max.
Line Width "A" at Anode No. 3 Current = 25μAdc	.016 Inches	Max.
Light Output at Anode No. 3 Current = 25μAdc[6] (3BMP1)	20 Foot Lamberts	Min.
Spot Position[7]	Within a 10 mm Square	

CIRCUIT VALUES

Grid Circuit Resistance	1.5 Megohms	Max.
Deflection Circuit Resistance[8]	1.0 Megohms	Max.

NOTES:

1. *These types are designed for optimum performance when operating at EB3/EB2 ratio of 2.0.*
2. *Type 3BMP12 can be severely and permanently damaged if current density is allowed to rise too high. Test and operate at minimum usable currents.*
3. *Visual extinction of undeflected focused spot.*
4. *Per MIL-E-1 specifications.*
5. *All portions of a raster pattern, adjusted so its widest points just touch the sides of a 1.938 inch square, will fall within the area bounded by the 1.938 inch square and an inscribed 1.862 inch square.*
6. *Measured in accordance with MIL-E-1 specifications using a raster size of 1⅞ x 1⅞ inches.*
7. *With tubes magnetically shielded, deflecting plates connected to Anode No. 2, and spot focused. Limit square centered on tube face, with sides parallel to deflection axes.*
8. *It is recommended that the deflecting electrode circuit resistance be approximately equal. Higher resistance values up to five megohms may be used for low beam current operation.*

OUTLINE

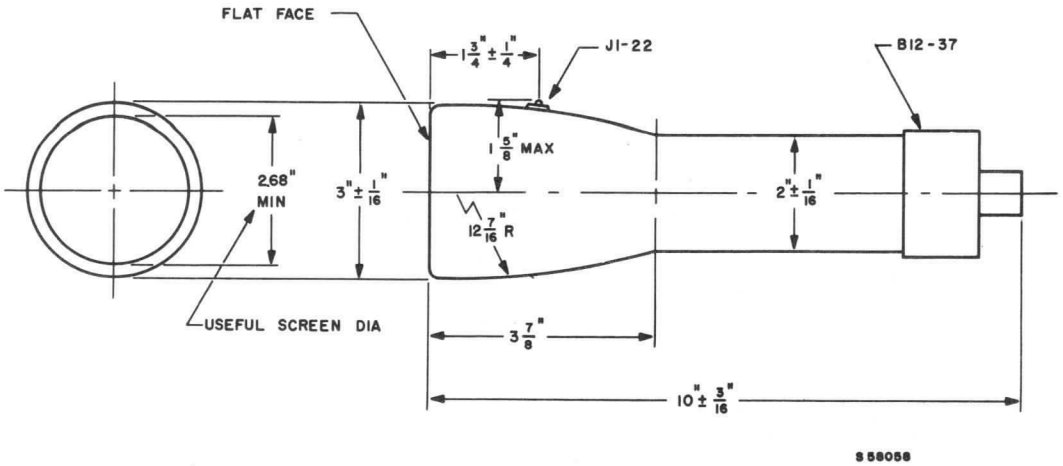

SYLVANIA

engineering data service

SYLVANIA

3BP1A

CHARACTERISTICS

GENERAL DATA

Focusing Method	Electrostatic
Deflecting Method	Electrostatic
Phosphor	P1
Fluorescence	Green
Persistence	Medium
Faceplate	Clear

ELECTRICAL DATA

Heater Voltage	6.3 Volts
Heater Current (approx.)	0.6 Ampere
Direct Interelectrode Capacitances (approx.)	
Cathode to All Other Electrodes	8.0 $\mu\mu$f
Grid to All Other Electrodes	8.5 $\mu\mu$f
Between Deflecting Plates 1-2[1]	2.0 $\mu\mu$f
Between Deflecting Plates 3-4[1]	2.0 $\mu\mu$f
Deflecting Plate 1 to All Other Electrodes Except DP2	6.0 $\mu\mu$f
Deflecting Plate 2 to All Other Electrodes Except DP1	5.0 $\mu\mu$f
Deflecting Plate 3 to All Other Electrodes Except DP4	4.0 $\mu\mu$f
Deflecting Plate 4 to All Other Electrodes Except DP3	6.0 $\mu\mu$f

MECHANICAL DATA

Minimum Useful Screen Diameter	2¾ Inches
Base	Medium Shell Diheptal 12-Pin
Basing	14G

RATINGS

MAXIMUM RATINGS (Absolute Values)

Anode No. 2 Voltage	2,200 Volts dc
Anode No. 1 Voltage	1,100 Volts dc
Grid Voltage	
Negative Value	200 Volts
Positive Value	0 Volts
Peak Heater-Cathode Voltage	
Heater Negative with Respect to Cathode	125 Volts
Heater Positive with Respect to Cathode	10 Volts
Peak Voltage Between Anode No. 2 And Any Deflection Plate	550 Volts

RECOMMENDED OPERATING CONDITIONS

Anode No. 2 Voltage[2]	2,000 Volts dc
Anode No. 1 Voltage for Focus	400 to 690 Volts dc
Grid Voltage Required for Cutoff[3]	−30 to −90 Volts dc
Deflection Factor	
Deflecting Plates 1-2[4]	200 Volts dc/Inch
Deflecting Plates 3-4[5]	148 Volts dc/Inch

CIRCUIT VALUES

Grid Circuit Resistance	1.5 Megohms Max.
Deflection Circuit Resistance	5.0 Megohms Max.

QUICK REFERENCE DATA

Special Purpose Tube
3" Direct Viewed
Round Glass Type
Electrostatic Deflection
Electrostatic Focus

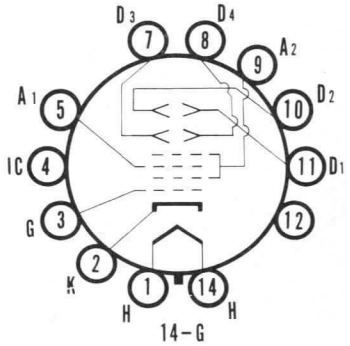

SYLVANIA ELECTRIC PRODUCTS INC.

TELEVISION PICTURE TUBE DIVISION
SENECA FALLS, NEW YORK

Prepared and Released By The TECHNICAL PUBLICATIONS SECTION EMPORIUM, PENNSYLVANIA

JULY, 1954

SYLVANIA

3BP1A

NOTES:

1. *Deflecting Plate 1 is Pin No. 11*
   Deflecting Plate 2 is Pin No. 10
   Deflecting Plate 3 is Pin No. 7
   Deflecting Plate 4 is Pin No. 8
2. *Brilliance and definition decrease with decreasing Anode No. 2 Voltage. In general, Anode No. 2 Voltage should not be less than 1500 volts.*
3. *Visual extinction of undeflected focused spot.*
4. *Deflecting Plates 1-2 are nearer the screen.*
5. *Deflecting Plates 3-4 are nearer the base.*

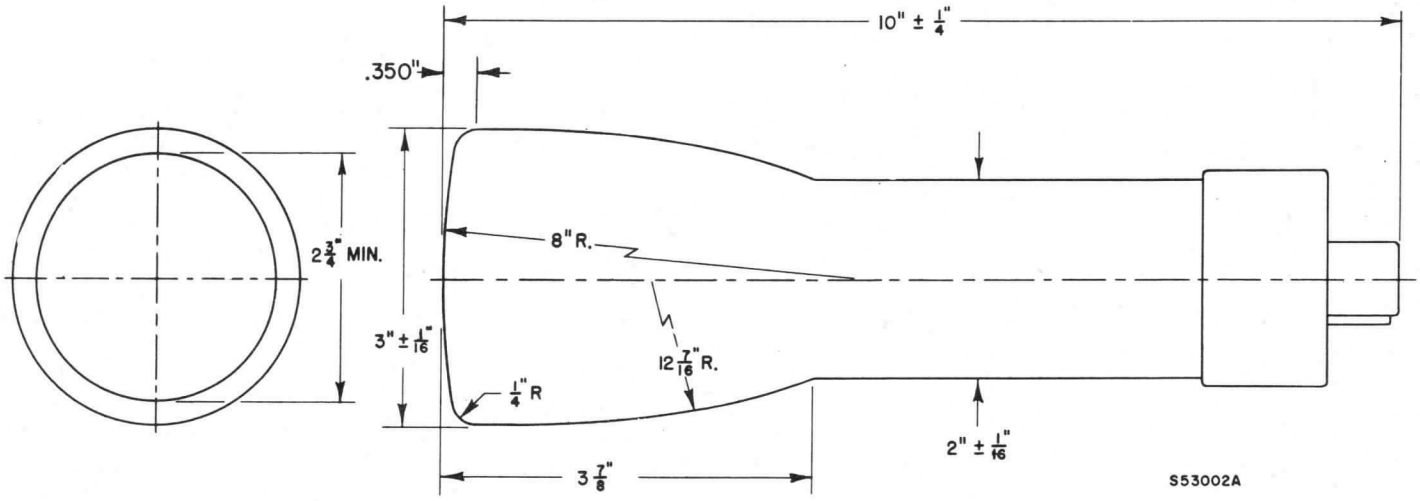

SYLVANIA

engineering data service

SYLVANIA
3JP1
3JP7
3JP12

CHARACTERISTICS

GENERAL DATA

Focusing Method	Electrostatic
Deflecting Method	Electrostatic
Phosphor	P1
Fluorescence	Green
Persistence	Medium
Faceplate	Clear

ELECTRICAL DATA

Heater Voltage	6.3 Volts
Heater Current (approx.)	0.6 ±10% Ampere
Direct Interelectrode Capacitances (approx.)	
Cathode to All Other Electrodes	8 μμf
Grid No. 1 to All Other Electrodes	8 μμf
Between Deflecting Plates 1-2[1]	2.5 μμf
Between Deflecting Plates 3-4[1]	2 μμf
Deflecting Plate 1[1] to All Other Electrodes	8 μμf
Deflecting Plate 2[1] to All Other Electrodes	7 μμf
Deflecting Plate 3[1] to All Other Electrodes	7 μμf
Deflecting Plate 4[1] to All Other Electrodes	8 μμf

MECHANICAL DATA

Minimum Useful Screen Diameter	2¾ Inches
Bulb Contact (Recessed Small Ball Cap)	J1-22
Base (Medium Shell Diheptal 12-Pin)	B12-37
Basing	14J

RATINGS

MAXIMUM RATINGS (Absolute Maximum Values)

Anode No. 3 Voltage	4,400 Volts dc
Anode No. 2 Voltage	2,200 Volts dc
Anode No. 1 Voltage	1,100 Volts dc
Grid No. 1 Voltage	
Negative Bias Value	220 Volts dc
Positive Bias Value	0 Volts dc
Positive Peak Value	2 Volts
Peak Heater-Cathode Voltage	
Heater Negative with Respect to Cathode	140 Volts
Heater Positive with Respect to Cathode	140 Volts
Peak Voltage Between Anode No. 2 And Any Deflecting Plate	550 Volts

TYPICAL OPERATING CONDITIONS

Anode No. 3 Voltage[2]	3,000 Volts dc
Anode No. 2 Voltage[3]	1,500 Volts dc
Anode No. 1 Voltage	300 to 515 Volts dc
Grid No. 1 Voltage Required for Cutoff[4]	−22.5 to 67.5 Volts dc
Deflection Factor[5, 6]	
Deflecting Plates 1-2[7]	127-173 Volts dc/Inch
Deflecting Plates 3-4[8]	94-128 Volts dc/Inch

CIRCUIT VALUES

Grid No. 1 Circuit Resistance	1.5 Megohms Max.
Deflection Circuit Resistance	5.0 Megohms Max.

QUICK REFERENCE DATA

Special Purpose Tube
3" Direct Viewed
Round Glass Type
Electrostatic Deflection
Electrostatic Focus
Post Deflection Accelerator

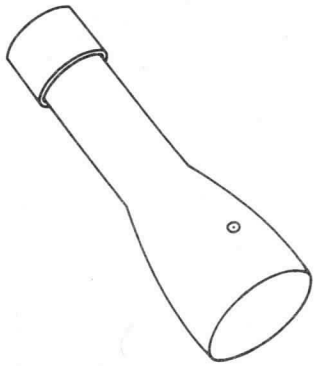

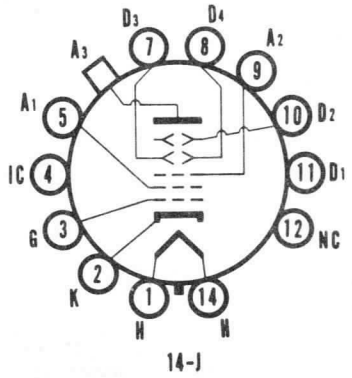

14-J

SYLVANIA ELECTRIC PRODUCTS INC.
TELEVISION PICTURE TUBE DIVISION
SENECA FALLS, NEW YORK

Prepared and Released By The TECHNICAL PUBLICATIONS SECTION EMPORIUM, PENNSYLVANIA
JULY, 1957

NOTES:

1. *Positive voltage on Pin No. 1 will deflect spot approximately toward Pin No. 5. Positive voltage on Pin No. 7 will deflect spot approximately toward Pin No. 2.*
2. *Anode No. 3 voltage should not be less than 3,000 volts for high speed scanning.*
3. *Recommended minimum value of Anode No. 2 Voltage.*
4. *Visual extinction of undeflected focused spot.*
5. *The plane through the tube axis and each of the following items may vary from the trace produced by Deflecting Plates 1-2 by the following angular tolerances measured about the tube axis; Pin 5 10 degrees; cap (on same side of tube as Pin 5) 10 degrees.*
6. *Angle between D1-D2 trace and D3-D4 trace is 90° ± 3°.*
7. *Deflecting Plates 1-2 are nearer the screen.*
8. *Deflecting Plates 3-4 are nearer the base.*

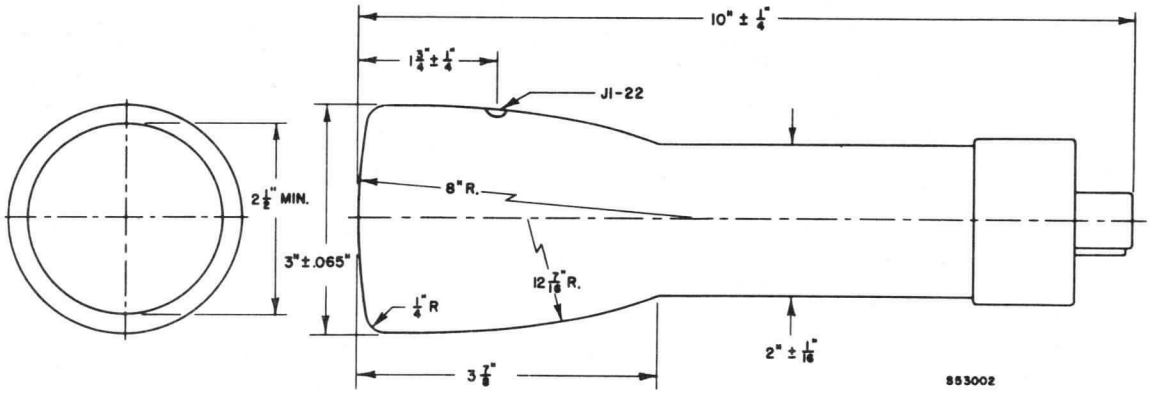

3JP7

The Type 3JP7 is identical to the Type 3JP1 except it has a phosphor of blue-white fluorescence, yellow phosphorescence, and long persistence.

3JP12

The Type 3JP12 is identical to the Type 3JP1 except it has an orange phosphor of Medium Long persistence.

SYLVANIA

engineering data service

SYLVANIA
3KP1
3KP*

CHARACTERISTICS

GENERAL DATA

Focusing Method	Electrostatic
Deflecting Method	Electrostatic

Types*	Fluorescence	Phosphorescence	Persistence
3KP1	Green	——	Medium
3KP4	White	——	Short to Medium
3KP7	Blue-White	Yellow	Long
3KP11	Blue	——	Short
3KP16	Violet & Near Ultraviolet	——	Extremely Short

Faceplate	Clear, Spherical

*In addition to the types shown, the 3KP- can be supplied with several other screen phosphors.

ELECTRICAL DATA

Heater Voltage	6.3 Volts
Heater Current	0.6 ± 10% Ampere
Direct Interelectrode Capacitances (Approx.)	
Grid No. 1 to All Other Electrodes	8 μμf
Between Deflecting Plates 1-2	2.5 μμf
Between Deflecting Plates 3-4	2.5 μμf
Deflecting Plate 1 to All Other Electrodes	11 μμf
Deflecting Plate 2 to All Other Electrodes	8 μμf
Deflecting Plate 3 to All Other Electrodes	7 μμf
Deflecting Plate 4 to All Other Electrodes	8 μμf

MECHANICAL DATA

Minimum Useful Screen Diameter	2¾ Inches
Bulb	J24N
Base (Medium Shell Magnal 11-Pin)	B11-66
Basing	11M
Base Alignment	
D3-D4 Trace Aligns with Pin No. 1 and Tube Axis	± 10 Degrees
Positive Voltage on D1 Deflects Beam Approx. Toward Pin No. 4	
Positive Voltage on D3 Deflects Beam Approx. Toward Pin No. 1	
Angle Between D1-D2 and D3-D4 Traces	90 ± 3 Degrees
Weight (Approx.)	¾ Pound

QUICK REFERENCE DATA

3" Direct Viewed
Round Glass Type
Clear, Spherical Faceplate
Electrostatic Deflection
Electrostatic Focus

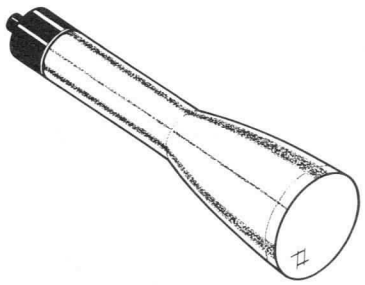

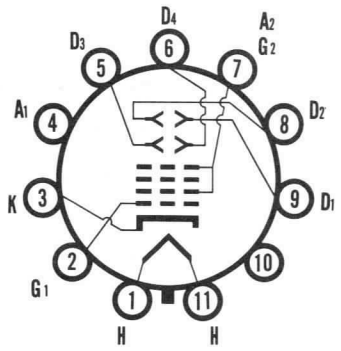

11-M

SYLVANIA
ELECTRONIC TUBES
A Division of
Sylvania Electric Products Inc.
PICTURE TUBE OPERATIONS
SENECA FALLS, NEW YORK

Prepared and Released By The
TECHNICAL PUBLICATIONS SECTION
EMPORIUM, PENNSYLVANIA

MARCH, 1960

File Under
SPECIAL AND GENERAL PURPOSE
CATHODE RAY TUBES

RATINGS

MAXIMUM RATINGS (Absolute Maximum Values)

Anode No. 2 Voltage[1]	2750 Volts dc
Anode No. 1 Voltage (Focusing Electrode)	1100 Volts dc
Grid No. 1 Voltage	
Negative Bias Value	220 Volts dc
Positive Bias Value	0 Volts dc
Positive Peak Value	2 Volts
Peak Heater-Cathode Voltage	
Heater Negative with Respect to Cathode	140 Volts
Heater Positive with Respect to Cathode	140 Volts
Peak Voltage Between Anode No. 2 and Any Deflecting Plate	550 Volts

TYPICAL OPERATING CONDITIONS

Anode No. 2 Voltage[2]	2000 Volts dc
Anode No. 1 Voltage for Focus	320 to 600 Volts dc
Grid No. 1 Voltage Required for Cutoff[3]	–38 to –90 Volts dc
Deflection Factor	
Deflecting Plates 1-2[4]	100 to 136 Volts dc/Inch
Deflecting Plates 3-4[5]	76 to 104 Volts dc/Inch
Spot Position (Focused, Undeflected)[6]	Within a Circle of 7.5 mm Radius concentric with the center of the face

CIRCUIT VALUES

Grid No. 1 Circuit Resistance	1.5 Megohms Max.
Resistance in any Deflecting Electrode Circuit[7]	5.0 Megohms Max.

NOTES:

1. *Anode No. 2 power input should be limited to 6 watts.*
2. *Brilliance and definition decrease with decreasing Anode No. 2 Voltage. Recommended minimum for Type 3KP1 is 1000 volts. Recommended minimum for Types 3KP4, 3KP7, 3KP11 and 3KP16 is 1500 volts.*
3. *Visual extinction of undeflected focused spot.*
4. *Deflecting Plates D1-D2 are nearer the screen.*
5. *Deflecting Plates D3-D4 are nearer the base.*
6. *With tube shielded and all deflection plates connected to Anode No. 2.*
7. *It is recommended that deflecting electrode circuit resistances be approximately equal.*

OUTLINE

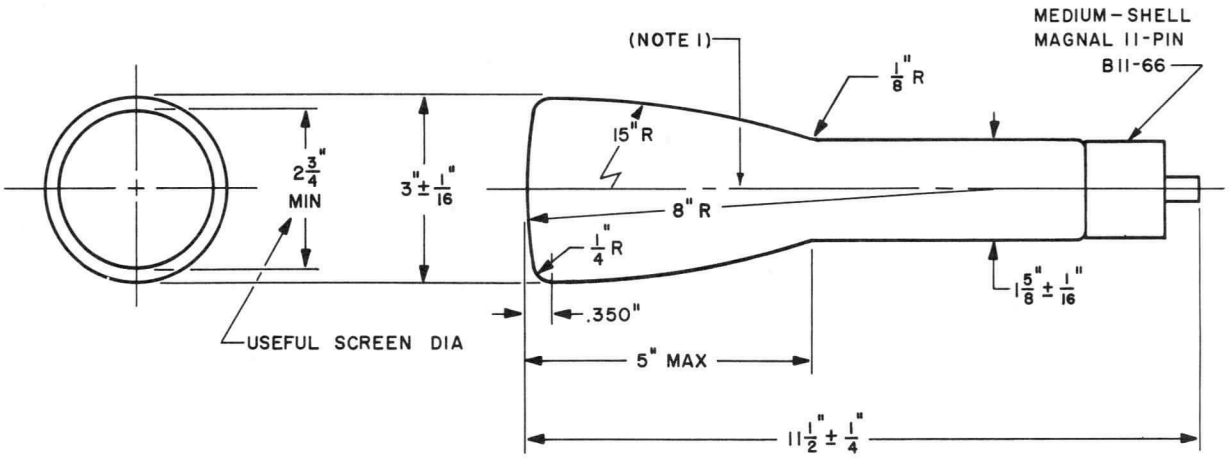

S 58060

DIAGRAM NOTE:

1. *Centerline of bulb will not deviate more than ± 2 degrees in any direction from perpendicular erected at center of bottom of base.*

CHARACTERISTICS

GENERAL DATA

Focusing Method	Electrostatic
Deflecting Method	Electrostatic
Type*	3MP1
Fluorescence	Green
Phosphorescence	——
Persistence	Medium
Faceplate	Clear, Spherical

*In addition to the type shown, the 3MP- can be supplied with several other screen phosphors

ELECTRICAL DATA

Heater Voltage	6.3 Volts
Heater Current	0.6 ± 10% Ampere
Direct Interelectrode Capacitances (approx.)	
Cathode to All Other Electrodes	2.2 μμf
Grid to All Other Electrodes	10.3 μμf
Between Deflecting Plates 1-2	1.3 μμf
Between Deflecting Plates 3-4	1.2 μμf
Deflecting Plate 1 to All Other Electrodes Except D2	4.4 μμf
Deflecting Plate 2 to All Other Electrodes Except D1	5.6 μμf
Deflecting Plate 3 to All Other Electrodes Except D4	5.0 μμf
Deflecting Plate 4 to All Other Electrodes Except D3	4.5 μμf

MECHANICAL DATA

Minimum Useful Screen Diameter	2¾ Inches
Bulb	J24P
Base (Small Shell Duodecal 12-Pin)	B12-43
Basing	12F
Base Alignment	
D1-D2 Trace Aligns with Pin No. 4 and Tube Axis	±10 Degrees
Positive Voltage on D1 Deflects Beam Approx. Toward Pin No. 4	
Positive Voltage on D3 Deflects Beam Approx. Toward Pin No. 1	
Angle Between D1-D2 and D3-D4 Traces	90±3 Degrees
Weight (Approx.)	½ Pound

QUICK REFERENCE DATA

Oscilloscope Tube
3″ Direct Viewed
Round Glass Type
Clear, Spherical Faceplate
Electrostatic Focus
Electrostatic Deflection

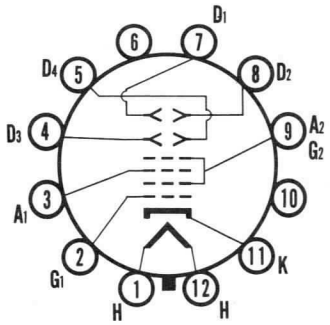

12-F

SYLVANIA
ELECTRONIC TUBES

A Division of
Sylvania Electric Products Inc.

PICTURE TUBE OPERATIONS
SENECA FALLS, NEW YORK

Prepared and Released By The
TECHNICAL PUBLICATIONS SECTION
EMPORIUM, PENNSYLVANIA

MARCH, 1960

File Under
SPECIAL AND GENERAL PURPOSE
CATHODE RAY TUBES

RATINGS

MAXIMUM RATINGS (Absolute Maximum Values)

Anode No. 2 Voltage	2750 Volts dc
Anode No. 1 Voltage (Focusing Electrode)	1100 Volts dc
Grid Voltage	
Negative Bias Value	220 Volts dc
Positive Bias Value	0 Volts dc
Positive Peak Value	2 Volts
Peak-Heater-Cathode Voltage	
Heater Negative with Respect to Cathode	140 Volts
Heater Positive with Respect to Cathode	140 Volts
Peak Voltage Between Anode No. 2 and	
Any Deflection Plate	550 Volts

TYPICAL OPERATING CONDITIONS

Anode No. 2 Voltage[1]	2000 Volts dc
Anode No. 1 Voltage for Focus	400 to 700 Volts dc
Grid Voltage Required for Cutoff[2]	0 to −126 Volts dc
Deflection Factor	
Deflection Plates 1-2[3]	230 to 290 Volts dc/Inch
Deflecting Plates 3-4[4]	220 to 280 Volts dc/Inch

CIRCUIT VALUES

Grid No. 1 Circuit Resistance	1.5 Megohms Max.
Deflection Circuit Resistance[5]	5.0 Megohms Max.

NOTES:

1. *Brilliance and definition decreases with decreasing Anode No. 2 Voltage. In general, Anode No. 2 Voltage should not be less than 1000 Volts.*
2. *Visual extinction of undeflected focused spot.*
3. *Deflecting Plates D1 and D2 are nearer the screen.*
4. *Deflecting Plates D3 and D4 are nearer the base.*
5. *It is recommended that the deflecting electrode circuit resistances be approximately equal.*

OUTLINE

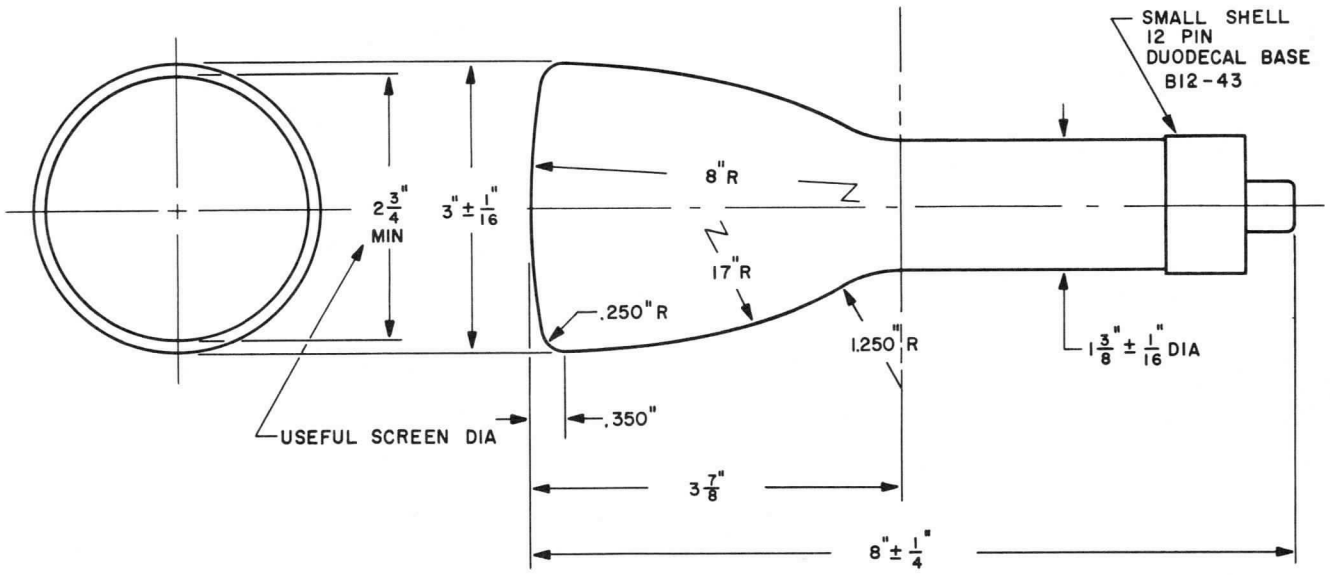

S 58061

CHARACTERISTICS

GENERAL DATA

Focusing Method	Electrostatic	
Deflection Method	Electrostatic	
Phosphor	3RP1, 3RP1A	3RP4, 3RP4A
Fluorescence	Green	White
Persistence	Medium	Short to Medium
Faceplate	Clear	

*In addition to the types shown, the 3RP- and 3RP-A can be supplied with several other screen phosphors.

ELECTRICAL DATA

Heater Voltage	6.3 Volts
Heater Current	0.6 ± 10 % Ampere
Direct Interelectrode Capacitances (Approx.)	
Cathode to All Other Electrodes	6 μμf
Grid No. 1 to All Other Electrodes	8 μμf
Between Deflecting Plates 1-2	2 μμf
Between Deflecting Plates 3-4	2 μμf
Deflecting Plate 1 to All Other Electrodes	11 μμf
Deflecting Plate 2 to All Other Electrodes	8 μμf
Deflecting Plate 3 to All Other Electrodes	7 μμf
Deflecting Plate 4 to All Other Electrodes	8 μμf

MECHANICAL DATA

Minimum Useful Screen Diameter	2 ¾ Inches
Overall Length	9⅛ ± ¼ Inches
Base (Small-Shell Duodecal 10-Pin)	B10-75
or (Small-Shell Duodecal 12-Pin)	B12-43
Basing	12E
Base Alignment	
D3-D4 Trace Aligns with Pin No. 1 and Tube Axis	±10 Degrees
Positive Voltage on D1 Deflects Beam Approx. Toward Pin No. 4	
Positive Voltage on D3 Deflects Beam Approx. Toward Pin No. 1	
Angle Between D3-D4 and D1-D2 Traces	90 ± 3 Degrees
Bulb	3RP-: J24P; 3RP-A: J24S
Weight (Approx.)	½ Pound

RATINGS

MAXIMUM RATINGS (Absolute Maximum Values)

Anode No. 2 Input	6 Watts	
Anode No. 2 Voltage	2750 Volts	dc
Anode No. 1 Voltage	1100 Volts	dc
Grid Voltage		
Negative Bias Value	220 Volts	dc
Positive Bias Value	0 Volts	dc
Positive Peak Value	2 Volts	
Peak Heater-Cathode Voltage		
Heater Negative with Respect to Cathode	140 Volts	
Heater Positive with Respect to Cathode	140 Volts	
Peak Voltage Between Anode No. 2 and Any Deflection Plate	550 Volts	

QUICK REFERENCE DATA

Oscilloscope Tube
3″ Direct Viewed
Round Glass Type
Electrostatic Deflection
Electrostatic Focus
Flat Faceplate (3RP1A)
Spherical Faceplate (3RP1)

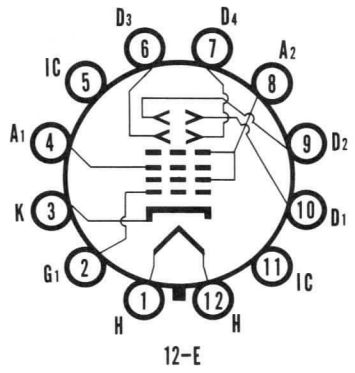

12-E

SYLVANIA
ELECTRONIC TUBES
A Division of
Sylvania Electric Products Inc.
PICTURE TUBE
OPERATIONS
SENECA FALLS, NEW YORK
Prepared and Released By The
TECHNICAL PUBLICATIONS SECTION
EMPORIUM, PENNSYLVANIA
JUNE, 1962

File Under
SPECIAL AND GENERAL
PURPOSE CATHODE RAY TUBES

TYPICAL OPERATING CONDITIONS

Anode No. 2 Voltage	1000	2000 Volts	dc
Anode No. 1 Voltage for Focus	165 to 310	330 to 620 Volts	dc
Grid Voltage Required for Cutoff[1]	−22.5 to −67.5	−45 to −135 Volts	dc
Deflection Factor			
Deflecting Plates 1-2[2]	73 to 99	146 to 198 Volts	dc/Inch
Deflecting Plates 3-4[3]	52 to 70	104 to 140 Volts	dc/Inch
Spot Position (Undeflected)[4]	—	7.5 MM	Max.

CIRCUIT VALUES

Grid Circuit Resistance	1.5 Megohms Max.
Deflection Circuit Resistance[5]	5.0 Megohms Max.

NOTES:

1. *Visual extinction of undeflected focused spot.*
2. *Deflecting Plates 1-2 are nearer the screen.*
3. *Deflecting Plates 3-4 are nearer the base.*
4. *The undeflected focused spot will fall within a circle having 7.5 mm radius and concentric with the center of the tube face.*
5. *It is recommended that the deflecting electrode circuit resistances be approximately equal.*

3RP1A

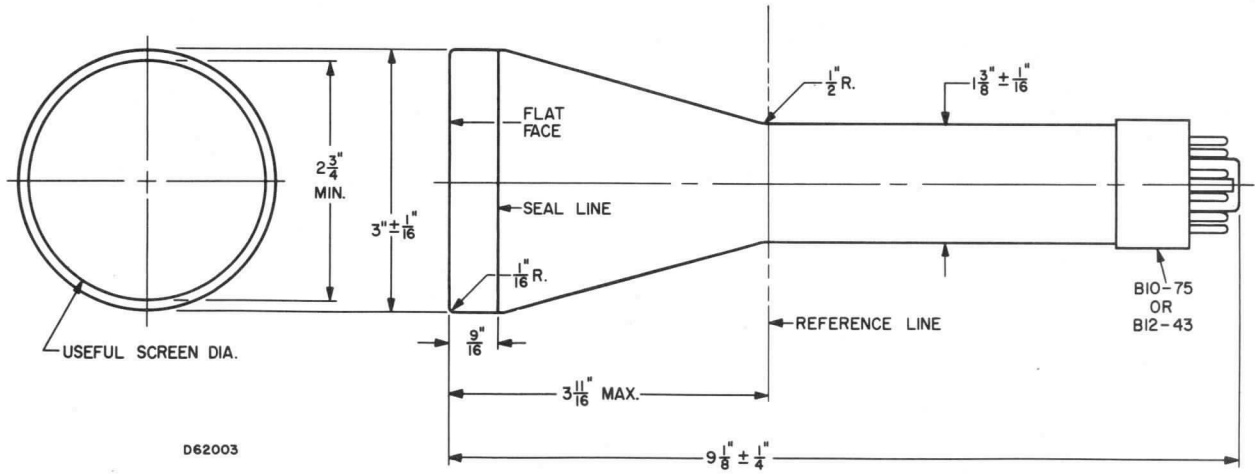
2 3/4" MIN.
3" ± 1/16"
FLAT FACE
SEAL LINE
1/16" R.
1/2" R.
1 3/8" ± 1/16"
B10-75 OR B12-43
REFERENCE LINE
USEFUL SCREEN DIA.
9/16"
3 11/16" MAX.
9 1/8" ± 1/4"
D62003

3RP1

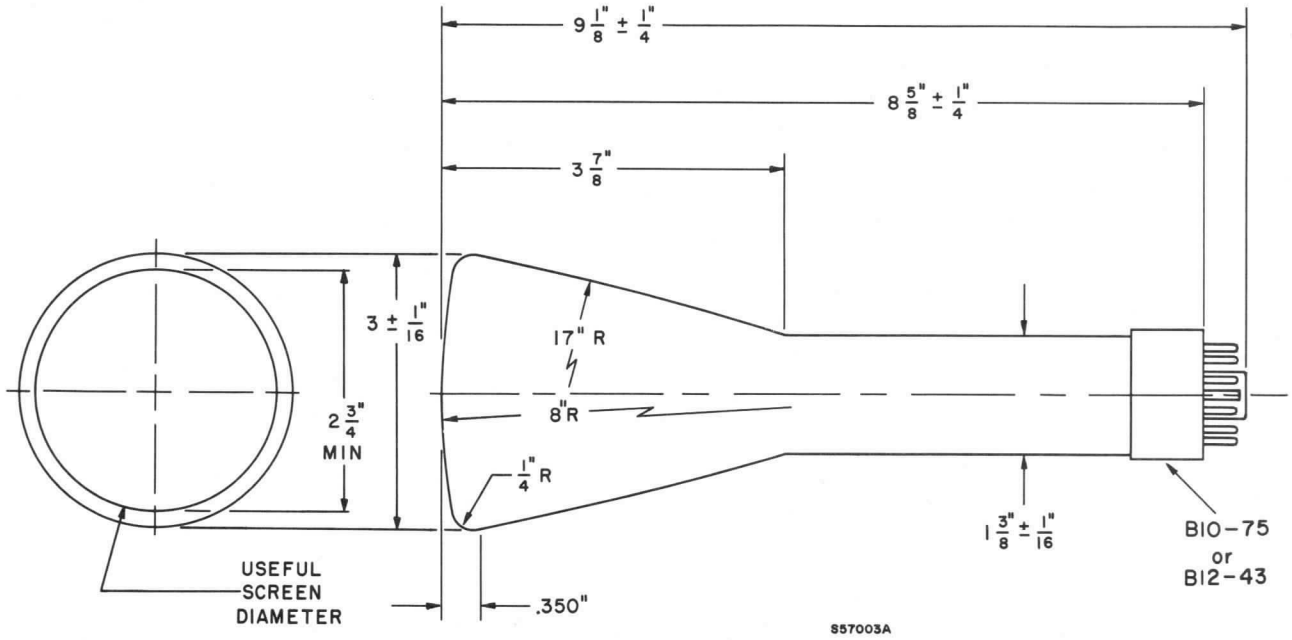
9 1/8" ± 1/4"
8 5/8" ± 1/4"
3 7/8"
3 ± 1/16"
17" R
8"R
2 3/4" MIN
1/4" R
1 3/8" ± 1/16"
B10-75 or B12-43
USEFUL SCREEN DIAMETER
.350"
S57003A

CHARACTERISTICS

GENERAL DATA

Focusing Method	Electrostatic
Deflecting Method	Electrostatic

Types*	Fluorescence	Phosphorescence	Persistence
3SP1	Green	———	Medium
3SP2	Blue-Green	Green	Long
3SP4	White	———	Short to Medium
3SP5	Blue	———	Very Short
3SP7	Blue-White	Yellow	Long
3SP11	Blue	———	Short

Faceplate . . . . . Clear, Cylindrical

*In addition to the types shown, the 3SP- can be supplied with several other screen phosphors.

ELECTRICAL DATA

Heater Voltage	6.3 Volts
Heater Current	0.6 ± 10% Ampere
Direct Interelectrode Capacitances (approx.)	
Cathode to All Other Electrodes	5 pf
Grid No. 1 to All Other Electrodes	6.5 pf
Between Deflecting Plates 1-2	2 pf
Between Deflecting Plates 3-4	2 pf
Deflecting Plate 1 to All Other Electrodes	7.5 pf
Deflecting Plate 2 to All Other Electrodes	6.0 pf
Deflecting Plate 3 to All Other Electrodes	5.5 pf
Deflecting Plate 4 to All Other Electrodes	6.5 pf

MECHANICAL DATA

Minimum Useful Screen Dimensions	
Horizontal	2¾ Inches
Vertical	1⅛ Inches
Diagonal	3 Inches
Base (Small Shell Duodecal 12-Pin)	B12-43
Basing	12E
Base Alignment	
The Plane through the Base Key and the Tube Axis aligns with Long Axis of Tube Face	± 10 Degrees
Trace Alignment[1]	
Angle Between D1-D2 trace and D3-D4 trace	90 ± 1 Degrees
D1-D2 trace Aligns with Long Axis of Tube Face[2]	± 1.5 Degrees
Positive Voltage on D1 deflects Beam approx. Toward Key	
Positive Voltage on D3 deflects Beam approx. Toward Pin. No. 4	
Bulb	C26 Exp 6 or equivalent
Weight (approx.)	¾ Pound

RATINGS

MAXIMUM RATINGS (Absolute Maximum Values)

Anode No. 2 Voltage	3000 Volts dc
Anode No. 1 Voltage (Focusing Electrode)	1200 Volts dc
Anode No. 2 Input	6 Watts Max.

QUICK REFERENCE DATA

Oscilloscope Tube
1½" x 3" Direct Viewed
Rectangular Glass Type
Electrostatic Deflection
Electrostatic Focus
Clear, Cylindrical
Faceplate

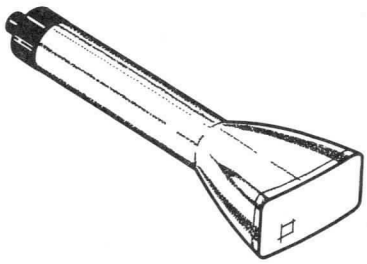

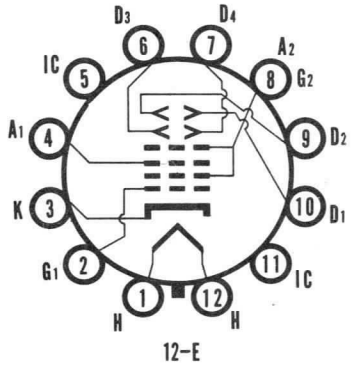

12-E

SYLVANIA ELECTRIC PRODUCTS INC.

Electronic Components Group
ELECTRONIC TUBE DIVISION
SENECA FALLS, NEW YORK

A Technical Publication

APRIL, 1964

File Under

SPECIAL AND GENERAL PURPOSE CATHODE RAY TUBES

MAXIMUM RATINGS (Absolute Maximum Values) (con'td)

Grid No. 1 Voltage		
Negative Bias Value	200 Volts	dc
Positive Bias Value	0 Volts	dc
Positive Peak Value	2 Volts	
Peak Heater-Cathode Voltage		
Heater Negative with Respect to Cathode	140 Volts	
Heater Positive with Respect to Cathode	140 Volts	
Peak Voltage between A2 and any Deflecting Plate	550 Volts	

TYPICAL OPERATING CONDITIONS

Anode No. 2 Voltage	2000 Volts	dc
Anode No. 1 Voltage for Focus	330 to 620 Volts	dc
Grid No. 1 Voltage Required for Cutoff[3]	−58 to −135 Volts	dc
Deflection Factors		
Deflecting Plates 1-2	146 to 198 Volts	dc/Inch
Deflecting Plates 3-4	104 to 140 Volts	dc/Inch
Spot Position (Focused, Undeflected)[4]	Within a 12 mm Square	

CIRCUIT VALUES

Grid No. 1 Circuit Resistance	1.5 Megohms Max.
Resistance in Any Deflecting Plate Circuit[5]	1.0 Megohms Max.

NOTES:

1. *Deflecting plates 1 & 2 are nearer the screen, and scan the major dimension of the screen. Plates 3 & 4 are nearer the base, and scan the minor dimension of the screen.*
2. *The D1-D2 trace scanning through the geometric center of the tube face will be parallel to the long axis of the tube face, within the limits specified.*
3. *Visual extinction of undeflected focused spot.*
4. *With deflecting plates connected to Anode No. 2 and with tube shielded. The sides of the limit square will be parellel to the deflection axes.*
5. *It is recommended that the deflecting plate circuit resistances be approximately equal.*

OUTLINE

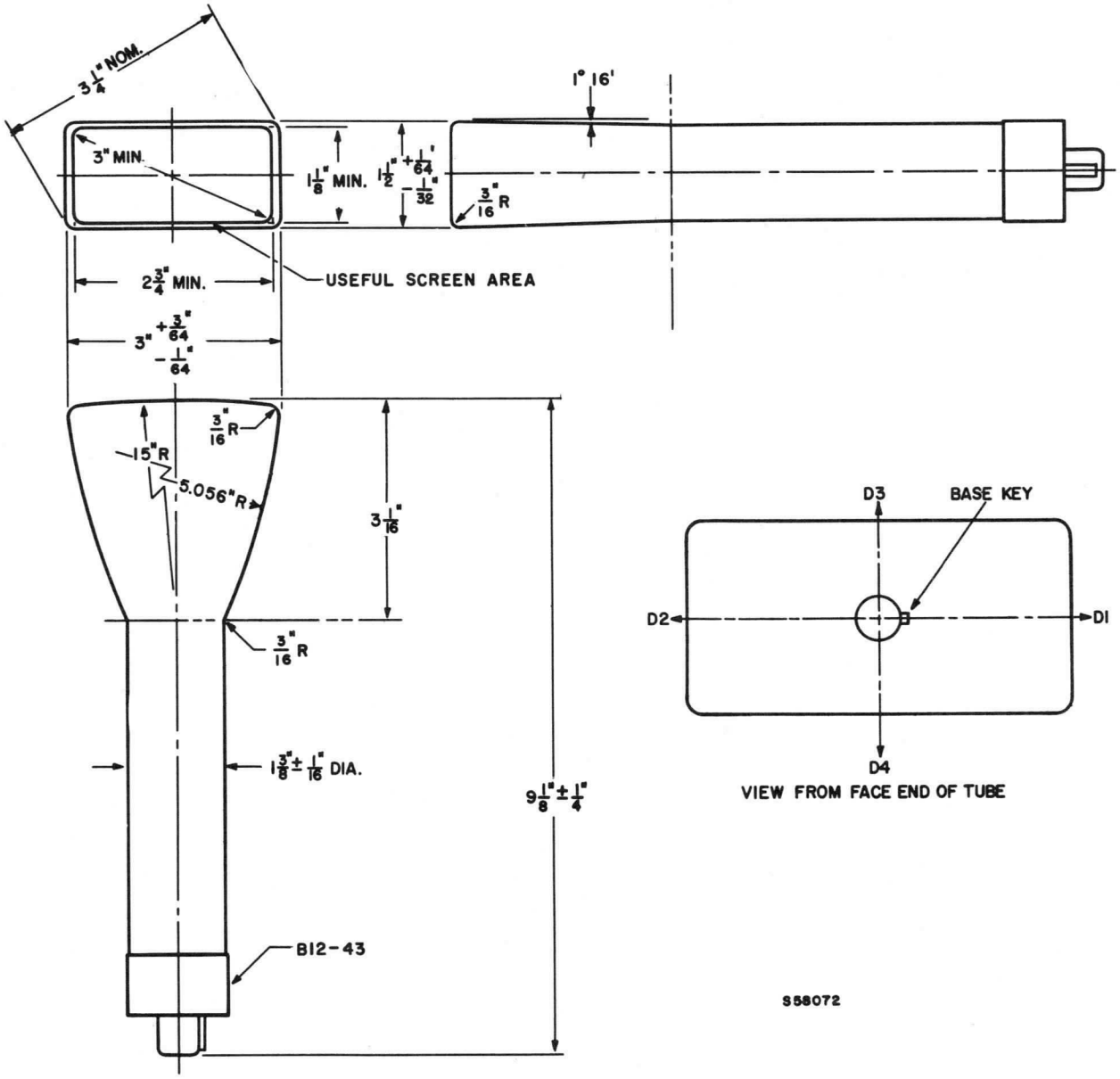
3 1/4" NOM.
3" MIN.
1 1/8" MIN.
1 1/2" +1/64" -1/32"
1° 16'
3/16" R
2 3/4" MIN.
USEFUL SCREEN AREA
3" +3/64" -1/64"
3/16" R
.15" R
5.056" R
3 1/16"
3/16" R
1 3/8" ± 1/16" DIA.
9 1/8" ± 1/4"
B12-43
D3
BASE KEY
D2
D1
D4
VIEW FROM FACE END OF TUBE
S58072

CHARACTERISTICS

GENERAL DATA

Focusing Method			Electrostatic
Deflection Method			Electrostatic
Types*	**3WP1**	**3WP2**	**3WP11**
Fluorescence	Green	Blue-Green	Blue
Phosphorescence	.....	Green	.....
Persistence	Medium	Long	Short
Faceplate			Flat, Clear

**In addition to the types shown, the 3WP- can be supplied with several other screen phosphors.*

ELECTRICAL DATA

Heater Voltage			6.3 Volts
Heater Current			0.6 ± 10% Ampere
Direct Interelectrode Capacitances			
	Min.	**Max.**	
Cathode to All Other Electrodes	3.0	5.7	μμf
Grid No. 1 to All Other Electrodes	4.6	8.7	μμf
Between Deflecting Plates 1-2	1.7	3.3	μμf
Between Deflecting Plates 3-4	1.0	2.0	μμf
Deflecting Plate 1 to All Other Electrodes except D2	3.8	7.2	μμf
Deflecting Plate 2 to All Other Electrodes except D1	3.8	7.2	μμf
Deflecting Plate 3 to All Other Electrodes except D4	2.5	4.8	μμf
Deflecting Plate 4 to All Other Electrodes except D3	2.5	4.8	μμf

MECHANICAL DATA

Minimum Useful Screen Diameter	2¾ Inches
Base (Small Shell Duodecal 12-Pin or	B12-43
Small Shell Duodecal 10-Pin)	B10-75
Basing	12T
Base Alignment	
D1-D2 trace aligns with Pin No. 3 and Tube Axis	±10 Degrees
Angle Between D1-D2 and D3-D4 Traces	90 ± 1 Degree

Positive voltage on D1 deflects beam approximately toward Pin No. 3.

Positive voltage on D3 deflects beam approximately toward Pin No. 12.

QUICK REFERENCE DATA

3" Direct Viewed
Round Glass Type
Electrostatic Deflection
Electrostatic Focus
High Deflection Sensitivity
Flat, Clear Faceplate

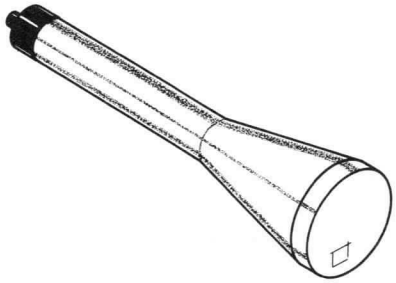

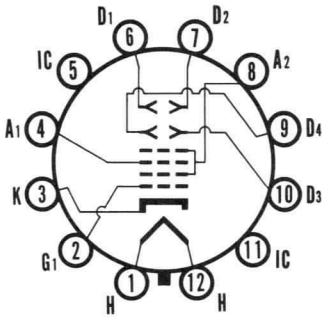

12-T

SYLVANIA
ELECTRONIC TUBES
A Division of
Sylvania Electric Products Inc.
PICTURE TUBE OPERATIONS
SENECA FALLS, NEW YORK

Prepared and Released By The
TECHNICAL PUBLICATIONS SECTION
EMPORIUM, PENNSYLVANIA

NOVEMBER, 1959

File Under
SPECIAL AND GENERAL
PURPOSE CATHODE RAY TUBES

RATINGS

MAXIMUM RATINGS (Absolute Maximum Values)

Anode No. 2 Voltage[1]	2750 Volts dc
Anode No. 1 Voltage (Focusing Electrode)	1100 Volts dc
Grid No. 1 Voltage	
Negative Bias Value	220 Volts dc
Positive Bias Value	0 Volts dc
Positive Peak Value	0 Volts
Peak Heater Cathode Voltage	
Heater Negative with Respect to Cathode	200 Volts
Heater Positive with Respect to Cathode	200 Volts
Peak Voltage Between Anode No. 2 and Any Deflecting Plate	550 Volts

TYPICAL OPERATING CONDITIONS

Anode No. 2 Voltage	1500 Volts dc
Anode No. 1 Voltage for Focus	247 to 465 Volts dc
Grid No. 1 Voltage Required for Cutoff[2]	−45 to −75 Volts dc
Deflection Factor	
Deflecting Plates 1-2	62 to 76 Volts dc/Inch
Deflecting Plates 3-4	43 to 52 Volts dc/Inch
Modulation[3] (3WP1, at 7 Ft. L. Light Output)	50 Volts Max.
Line Width A[3] (3WP1, at 7 Ft. L. Light Output)	.026 Inches Max.
Deflection Factor Uniformity[4]	2 Percent Max.
Pattern Distortion @ 75% of Useful Scan[5]	2½ Percent Max.
Spot Position (Focused, Undeflected)[6]	Within a 3/16 Inch Radius Circle

Useful Scan

D1-D2 ± 1.25 Inches from Tube Face Center
or a total of 2.50 Inches Min.

D3-D4 ± 1.125 Inches from Tube Face Center
or a total of 2.25 Inches Min.

CIRCUIT VALUES

Grid No. 1 Circuit Resistance	1.5 Megohms Max.
Deflection Circuit Resistance[7]	5.0 Megohms Max.

NOTES:

1. *The product of acceleration voltage and average acceleration current should be limited to 6.0 watts.*
2. *Visual extinction of undeflected focused spot.*
3. *Measured in accordance with MIL-E-1.*
4. *The deflection factors of 75% of useful scan and at 25% of useful scan shall not differ by more than the indicated value.*
5. *The edges of a raster pattern, whose mean dimensions are the indicated percentage of useful scan, shall not deviate from the mean dimensional rectangle by more than the specified amount.*
6. *Centered on the tube face with the tube shielded and with all deflection plates connected to anode No. 2.*
7. *It is recommended that the deflecting electrode circuit resistances be approximately equal.*

OUTLINE

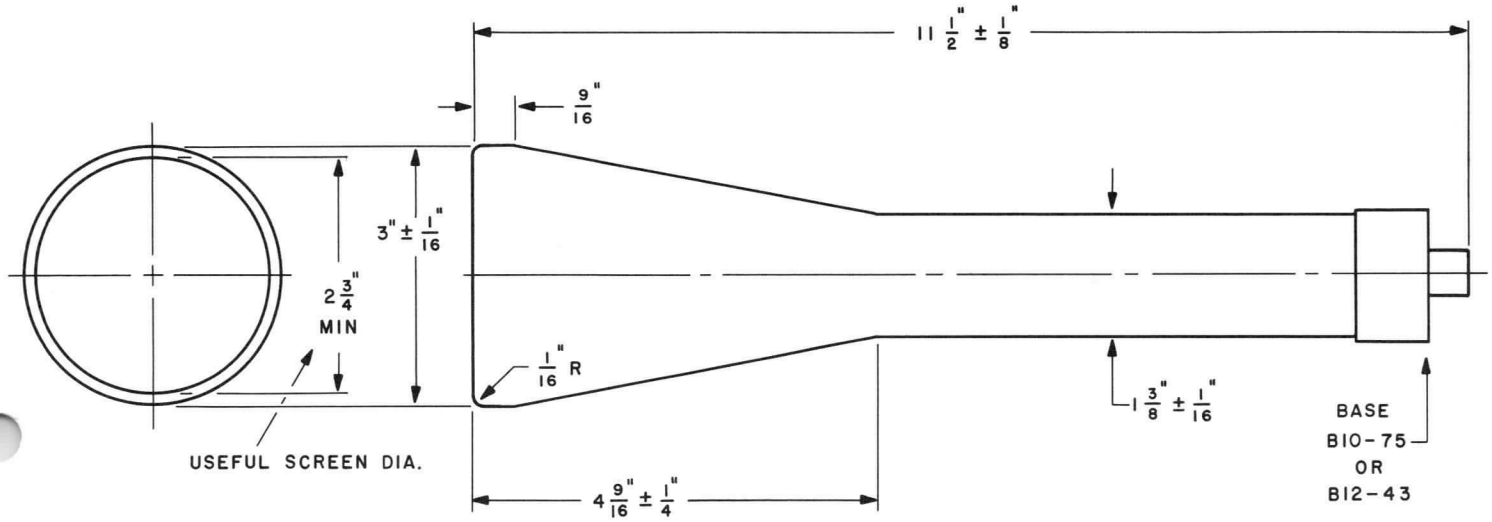

S 58068

A Technical Publication of
SYLVANIA ELECTRIC
PRODUCTS INC.
EMPORIUM, PA.

SYLVANIA

engineering data service

SYLVANIA
4MP1
4MP*

CHARACTERISTICS

GENERAL DATA

Focusing Method	Electrostatic
Deflection Method	Electrostatic

Types*	Fluorescence	Phosphorescence	Persistence
4MP1	Green	——	Medium
4MP2	Blue - Green	Green	Long
4MP7	Blue - White	Yellow	Long
4MP11	Blue	——	Short

Faceplate . . . . . Spherical, Clear

*In addition to the types shown, the 4MP — can be supplied with several other screen phosphors.

ELECTRICAL DATA

Heater Voltage	6.3 Volts
Heater Current	0.6 ± 10% Amperes
Direct Interelectrode Capacitances	
Cathode to All Other Electrodes	5.0 μμf
Grid No. 1 to All Other Electrodes	6.2 μμf
Between Deflecting Plates 1-2[11]	2.7 μμf
Between Deflecting Plates 3-4[11]	1.9 μμf
Deflecting Plate 1 to All Other Electrodes	5.8 μμf
Deflecting Plate 2 to All Other Electrodes	5.8 μμf
Deflecting Plate 3 to All Other Electrodes	4.3 μμf
Deflecting Plate 4 to All Other Electrodes	4.0 μμf

MECHANICAL DATA

Minimum Useful Screen (Rounded Corners)	2⅞ x 2⅞ Inches
Bulb Contact (Recessed Small Ball Cap)	J1-22
Neck Contacts (Anode No. 2 and Deflection Plates)	J1-25
Bulb	LEA 467 or Equivalent
Weight (Approx.)	1½ Pounds
Base (Small Shell Duodecal 12-Pin)	B12-43
Basing	12Z
Base Alignment	
D1-D2 trace aligns with Pin No. 5 and Tube Axis	±10 Degrees
Positive Voltage on D1 deflects beam approx. toward Pin No. 5	
Positive Voltage on D3 deflects beam approx. toward Pin No. 2	
Bulb Contact Alignment	
J1-22 Contact Aligns with D1-D2 Trace	±10 Degrees
J1-22 Contact on Same Side as Pin No. 5	
Trace Alignment	
Angle between D1-D2 and D3-D4 Trace	90 ± 1 Degrees
D1-D2 Trace Aligns with Bulb Wall	± 1.5 Degrees

QUICK REFERENCE DATA

3½" x 3½" Direct Viewed
Square Glass Type
Spherical Clear Faceplate
Electrostatic Focus
Electrostatic Deflection
Post Deflection Acceleration
Deflection Plate
Connectors on Neck Wall

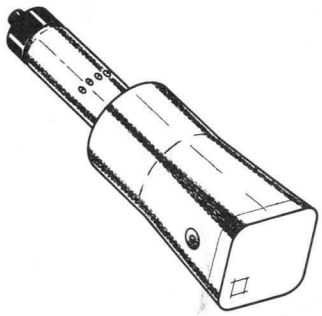

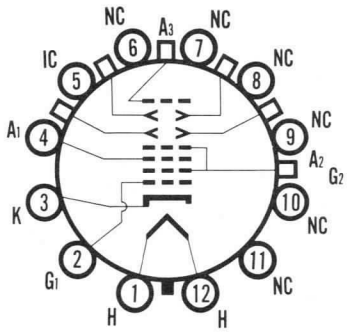

SB 12-Z

SYLVANIA
ELECTRONIC TUBES

A Division of
Sylvania Electric Products Inc.

PICTURE TUBE OPERATIONS
SENECA FALLS, NEW YORK

Prepared and Released By The
TECHNICAL PUBLICATIONS SECTION
EMPORIUM, PENNSYLVANIA

MARCH, 1960

File Under
SPECIAL AND GENERAL PURPOSE
CATHODE RAY TUBES

RATINGS

MAXIMUM RATINGS (Absolute Maximum Values)

Anode No. 2 Input	6.6 Watts
Anode No. 3 Voltage	6600 Volts dc
Anode No. 2 Voltage	3300 Volts dc
Ratio of Anode No. 3 Voltage to Anode No. 2 Voltage[1]	2 :1
Anode No. 1 Voltage (Focusing Electrode)	1100 Volts dc
Grid No. 1 Voltage	
Negative Bias Value	220 Volts dc
Positive Bias Value	0 Volts dc
Positive Peak Value	0 Volts
Peak Heater-Cathode Voltage	
Heater Negative with Respect to Cathode	200 Volts
Heater Positive with Respect to Cathode	200 Volts
Peak Voltage Between Anode No. 2 and Any Deflecting Plate	600 Volts

TYPICAL OPERATING CONDITIONS

Anode No. 3 Voltage	4000 Volts	
Anode No. 2 Voltage	2000 Volts	
Anode No. 1 Voltage for Focus	340 to 510 Volts	
Grid No. 1 Voltage Required for Cutoff[2]	−52 to −87 Volts	
Deflection Factor		
Deflecting Plates 1-2	68 to 82 Volts	dc/Inch
Deflecting Plates 3-4	42 to 52 Volts	dc/Inch
Modulation at Ib3 = 25 μa[3]	38 Volts	dc Max.
Line Width "A" at Ib3 = 25 μa[3]	.45 mm	Max.
Line Width "B" at Ib3 = 25 μa[3]	.65 mm	Max.
Light Output at Ib3 = 25 μa[4]		
4MP1[5]	20 Ft. L.	Min.
4MP11[6]	14 Ft. L.	Min.
Deflection Factor Uniformity[3]	2 Percent	Max.
Pattern Distortion[7]	2 Percent	Max.
Undeflected Spot Position[8]	Within a 10 mm Square	
Trace Distortion[9]	.02 Inch	Max.
Useful Scan	2⅞ Inches	Min.

CIRCUIT VALUES

Grid No. 1 Circuit Resistance	1.5 Megohms Max.
Deflection Circuit Resistance[10]	1.0 Megohms Max.

NOTES:

1. *This tube is designed for optimum performance when operated at an Eb3/Eb2 ratio of 2.0. Operation of other ratios of Eb3/Eb2 may result in changes of deflection uniformity and pattern distortion.*

NOTES: (Cont'd)

2. *Visual extinction of undeflected focused spot.*
3. *Measured in accordance with MIL-E-1.*
4. *Using a raster size of 2¼ x 2¼ inches.*
5. *Using a No. 594 Photronic cell with Viscor filter (for eye correction).*
6. *Using a No. 594 Photronic cell without Viscor filter (without eye correction).*
7. *All portions of a raster, pattern adjusted so its widest points just touch the sides of 2.295 x 2.295 inch square, will fall within the area bounded by the 2.295 x 2.295 inch square and an inscribed 2.205 x 2.205 inch square.*
8. *Centered with respect to the tube face and with the tube shielded. Connect free deflection electrodes to accelerator.*
9. *A 2¼ inch long trace which is deflected and focused ± 1⅛ inch from center in both the horizontal and vertical directions, shall not deviate from straight lines by more than the indicated value.*
10. *It is recommended that the deflection electrode circuit resistances be approximately equal.*
11. *Deflecting plates D1 and D2 are nearer the screen while deflecting plates D3 and D4 are nearer the base.*

WARNING:

X-ray radiation shielding may be necessary to protect against possible danger of personal injury from prolonged exposure at close range if this tube is operated at higher than the manufacturer's Maximum Rated Anode Voltage or 16,000 volts, whichever is less.

OUTLINE

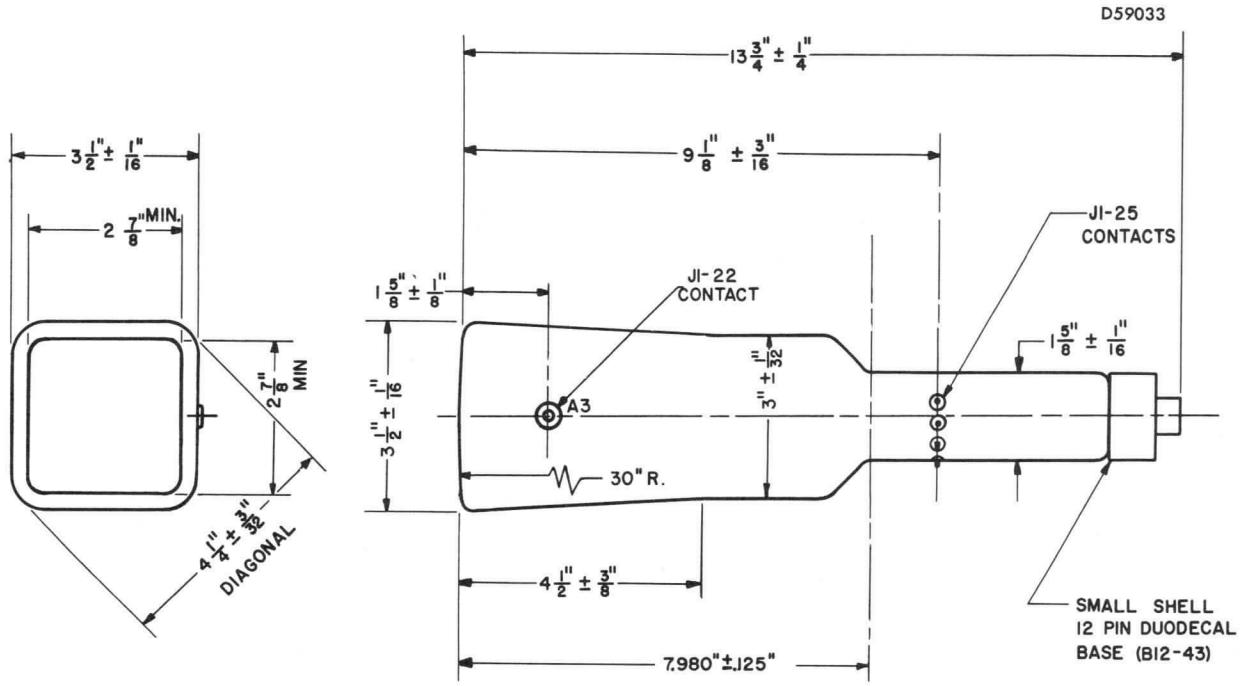

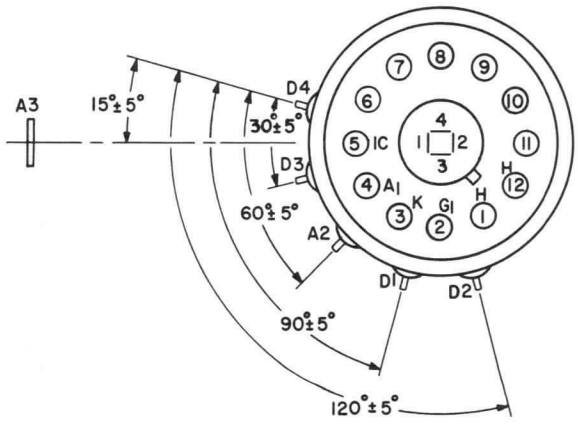

BOTTOM VIEW OF BASE

CHARACTERISTICS

GENERAL DATA

Focusing Method	Electrostatic
Deflection Method	Electrostatic

Types*	Fluorescence	Phosphorescence	Persistence
4VP1	Green	—	Medium
4VP2	Blue-Green	Green	Long
4VP7	Blue-White	Yellow	Long
4VP11	Blue	—	Short

Faceplate . . . . . Spherical, Clear

**In addition to the types shown, the 4VP- can be supplied with several screen phosphors.*

ELECTRICAL DATA

Heater Voltage	6.3 Volts
Heater Current	0.6 ± 10 % Amperes
Direct Interelectrode Capacitances (Approx.)	
Cathode to All Other Electrodes	5 μμf
Grid No. 1 to All Other Electrodes	6.5 μμf
Between Deflecting Plates 1-2[11]	2 μμf
Between Deflecting Plates 3-4[11]	2 μμf
Deflecting Plate 1 to All Other Electrodes	7.5 μμf
Deflecting Plate 2 to All Other Electrodes	6 μμf
Deflecting Plate 3 to All Other Electrodes	5.5 μμf
Deflecting Plate 4 to All Other Electrodes	6.5 μμf

MECHANICAL DATA

Minimum Useful Screen (Rounded Corners)	2⅞ x 2⅞ Inches
Bulb Contact (Recessed Small Ball Cap)	J1-22
Bulb	LEA 467 or Equivalent
Weight (Approx.)	1½ Pounds
Base (Small Shell Duodecal 12-Pin)	B12-43
Basing	12EP
Base Alignment	
D1-D2 Trace Aligns with Base Key and Tube Axis[6]	±10 Degrees
Positive Voltage on D1 Deflects Beam Approx. Toward Base Key	
Positive Voltage on D3 Deflects Beam Approx. Toward Pin No. 9	
Bulb Contact Alignment	
J1-22 Contact Aligns with D1-D2 Trace	±10 Degrees
J1-22 Contact on Same Side as Base Key	
Trace Alignment	
Angle between D1-D2 and D3-D4 Trace	90 ± 2 Degrees
D1-D2 Trace Aligns with Bulb Wall	±1.5 Degrees

RATINGS

MAXIMUM RATINGS (Absolute Maximum Values)

Anode No. 2 Input	6 Watts
Anode No. 3 Voltage	5500 Volts dc
Anode No. 2 Voltage	2750 Volts dc
Ratio of Anode No. 3 Voltage to Anode No. 2 Voltage[1]	2:1
Anode No. 1 Voltage (Focusing Electrode)	1100 Volts dc
Grid No. 1 Voltage	
Negative Bias Value	200 Volts dc
Positive Bias Value	0 Volts dc
Positive Peak Value	0 Volts
Peak Heater-Cathode Voltage	
Heater Negative with Respect to Cathode	180 Volts
Heater Positive with Respect to Cathode	180 Volts
Peak Voltage Between Anode No. 2 and Any Deflecting Plate	600 Volts

QUICK REFERENCE DATA

3 ½" x 3 ½" Direct Viewed
Square Glass Type
Spherical Clear Faceplate
Electrostatic Focus
Electrostatic Deflection
Post Deflection Acceleration

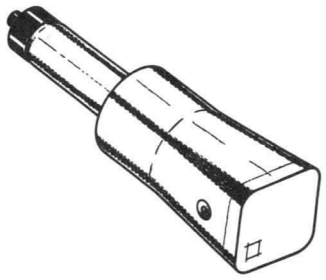

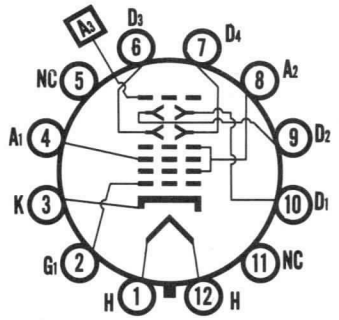

12EP

SYLVANIA
ELECTRONIC TUBES

A Division of
Sylvania Electric Products Inc.

PICTURE TUBE
OPERATIONS

SENECA FALLS, NEW YORK

Prepared and Released By The
TECHNICAL PUBLICATIONS SECTION
EMPORIUM, PENNSYLVANIA

MARCH, 1963

File Under
SPECIAL AND GENERAL
PURPOSE CATHODE RAY TUBES

TYPICAL OPERATING CONDITIONS

Anode No. 3 Voltage	4000 Volts	
Anode No. 2 Voltage	2000 Volts	
Anode No. 1 Voltage for Focus	200 to 500 Volts	
Grid No. 1 Voltage Required for Cutoff[2]	−58 to −135 Volts	
Deflection Factor		
Deflecting Plates 1-2	98 to 132 Volts dc/Inch	
Deflecting Plates 3-4	72 to 98 Volts dc/Inch	
Modulation at Ib3 = 25 μa[3]	30 Volts dc/	Max.
Line Width "A" at Ib3 = 25 μa[3]	.45 mm	Max.
Line Width "B" at Ib3 = 25 μa[3]	.55 mm	Max.
Light Output at Ib3 = 25 μa[3]		
P1	25 Ft. L	Min.
Deflection Factor Uniformity[3]	3 Percent	Max.
Undeflected Spot Position[4]	Within a 10 mm Square	
Useful Scan	2⅞ Inches	Min.

CIRCUIT VALUES

Grid No. 1 Circuit Resistance	1.5 Megohms	Max.
Deflection Circuit Resistance[5]	1.0 Megohms	Max.

NOTES:

1. *This tube is designed for optimum performance when operated at an Eb3/Eb2 ratio of 2.0. Operation of other ratios of Eb3/Eb2 may result in changes of deflection uniformity and pattern distortion.*
2. *Visual extinction of undeflected focused spot.*
3. *Measured in accordance with MIL-E-1.*
4. *Centered with respect to the tube face and with the tube shielded. Connect free deflection electrodes to accelerator.*
5. *It is recommended that the deflection electrode circuit resistances be approximately equal.*
6. *Deflecting plates D1 and D2 are nearer the screen while deflecting plates D3 and D4 are nearer the base.*

WARNING:

X-ray radiation shielding may be necessary to protect against possible danger of personal injury from prolonged exposure at close range if this tube is operated at higher than the manufacturer's Maximum Rated Anode Voltage or 16,000 volts, whichever is less.

OUTLINE

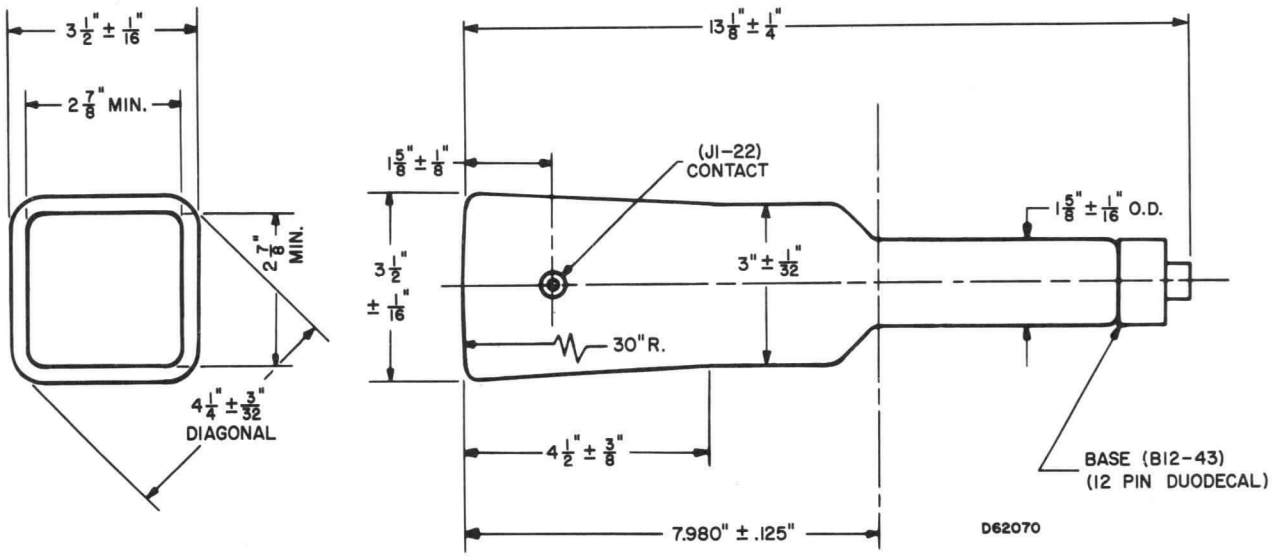

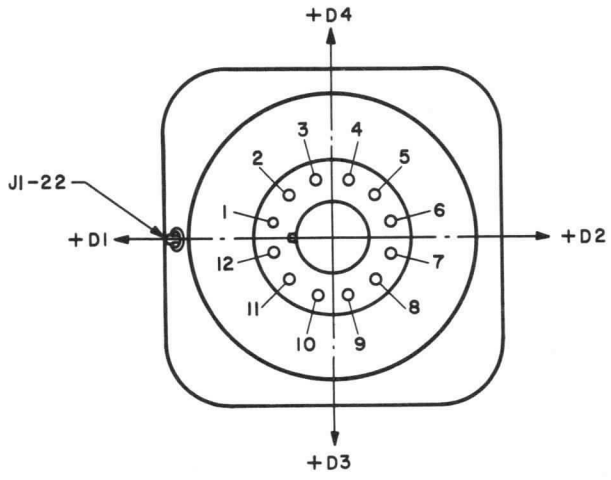

BOTTOM VIEW OF BASE

SYLVANIA

engineering data service

SYLVANIA
5ABP1
5ABP*

CHARACTERISTICS

GENERAL DATA

Focusing Method	Electrostatic
Deflection Method	Electrostatic

Types*	5ABP1	5ABP4	5ABP7	5ABP11
Fluorescence	Green	White	Blue	Blue
Phosphorescence	.....	.....	Yellow	.....
Persistence	Medium	Medium	Long	Short

Faceplate	Clear

**In addition to the types shown, the 5ABP- can be supplied with several other screen phosphors.*

ELECTRICAL DATA

Heater Voltage	6.3 Volts
Heater Current	0.6 Ampere
Direct Interelectrode Capacitances (Nominal)	
Cathode to All Other Electrodes	5.0 $\mu\mu$f
Grid No. 1 to All Other Electrodes	8.0 $\mu\mu$f
Between Deflecting Plates 1-2	2.5 $\mu\mu$f
Between Deflecting Plates 3-4	1.3 $\mu\mu$f
Deflecting Plate 1^1 to All Other Electrodes	9.0 $\mu\mu$f
Deflecting Plate 2^1 to All Other Electrodes	9.0 $\mu\mu$f
Deflecting Plate 3^1 to All Other Electrodes	5.0 $\mu\mu$f
Deflecting Plate 4^1 to All Other Electrodes	6.0 $\mu\mu$f

MECHANICAL DATA

Minimum Useful Screen Diameter	4-9/16 Inches
Bulb Contact (Recessed Small Ball Cap)	J1-22
Bulb	J42K
Base (Medium Shell Diheptal 12-Pin)	B12-37
Basing	14J

Base Alignment

The plane through the tube axis and each of the following items may vary from the trace produced by D1 and D2 by the following angular tolerances (measured about the tube axis): Pin 5, 10 Degrees; side terminal (on same side of tube as Pin No. 5), 10 Degrees.

Angle between D1-D2 trace and D3-D4 trace is 90 ± 1.5 Degrees.

Weight (approx.)	2½ Pounds
Mounting Position	Any

QUICK REFERENCE DATA

Oscilloscope Tube
5" Direct Viewed
Round Glass Type
Flate Faceplate
Clear Faceplate
Electrostatic Focus
Electrostatic Deflection
High Sensitivity
Post Deflection Acceleration.

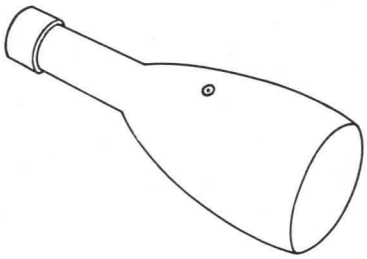

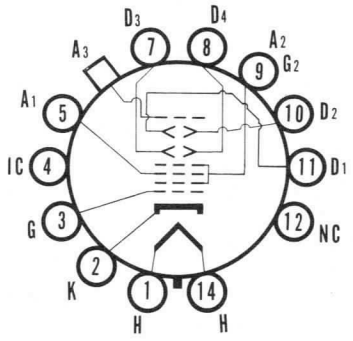

14-J

SYLVANIA ELECTRIC PRODUCTS INC.
TELEVISION PICTURE TUBE DIVISION
SENECA FALLS, NEW YORK

Prepared and Released By The TECHNICAL PUBLICATIONS SECTION EMPORIUM, PENNSYLVANIA
SEPTEMBER, 1958

RATINGS

MAXIMUM RATINGS (Absolute Maximum Values)

Anode No. 3 Voltage	6600	Volts	dc
Anode No. 2 Voltage[2]	2860	Volts	dc
Ratio of Anode No. 3 Voltage to Anode No. 2 Voltage	2.3:1	Maximum	
Anode No. 1 Voltage	1100	Volts	dc
Grid No. 1 Voltage			
Negative Bias Value	220	Volts	dc
Positive Bias Value	0	Volts	dc
Positive Peak Value	2	Volts	
Peak Heater-Cathode Voltage			
Heater Negative with Respect to Cathode	140	Volts	dc
Heater Positive with Respect to Cathode	140	Volts	dc
Peak Voltage Between Anode No. 2 and Any Deflection Plate	550	Volts	

TYPICAL OPERATING CONDITIONS

Anode No. 3 Voltage[3]	3000	Volts	dc
Anode No. 2 Voltage[4]	1500	Volts	dc
Anode No. 1 Voltage for Focus	300 to 515	Volts	dc
Grid No. 1 Voltage Required for Cutoff[5]	−39 to −65	Volts	dc
Deflection Factor[6]			
Deflecting Plates 1-2[7]	40 to 54	Volts	dc/Inch
Deflecting Plates 3-4[8]	27 to 36	Volts	dc/Inch

CIRCUIT VALUES

Grid No. 1 Circuit Resistance	1.5	Megohms Max.
Deflection Circuit Resistance[9]	5	Megohms Max.

NOTES:

1. *Deflecting Plate 1 is Pin No. 11*
   Deflecting Plate 2 is Pin No. 10
   Deflecting Plate 3 is Pin No. 7
   Deflecting Plate 4 is Pin No. 8
   With D1 positive with respect to D2, the spot is deflected toward Pin No. 5
   With D3 positive with respect to D4, the spot is deflected toward Pin No. 2
2. *The product of the Anode No. 2 Voltage and the Average Anode No. 2 Current should be limited to 6 Watts.*
3. *It is recommended that the Anode No. 3 voltage be not less than 3000 Volts for high-speed scanning.*
4. *In general Anode No. 2 voltage should not be operated at less than 1500 Volts.*
5. *Visual extinction of undeflected focused spot.*
6. *The deflecting electrodes D3 and D4 are designed to have extra-high deflection sensitivity and consequently produce less than full-screen deflection. With post deflection acceleration, the length of deflection may be limited to 4 inches; without post-deflection acceleration, deflection to full screen diameter will ordinarily be obtained. These electrodes are, therefore, more suitable for the signal voltage than for the time base voltage.*
7. *Deflecting Plates 1-2 are nearer the screen.*
8. *Deflecting Plates 3-4 are nearer the base.*
9. *It is recommended that the deflecting electrode resistances be approximately equal.*

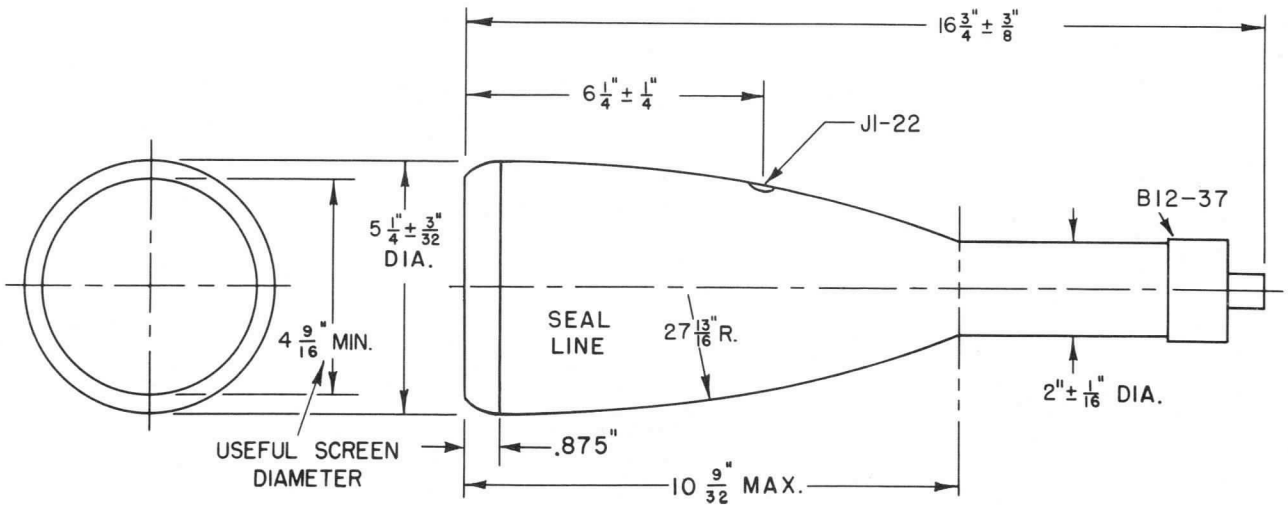
16 3/4" ± 3/8"
6 1/4" ± 1/4"
J1-22
B12-37
5 1/4" ± 3/32" DIA.
4 9/16" MIN.
SEAL LINE
27 13/16" R.
2" ± 1/16" DIA.
USEFUL SCREEN DIAMETER
.875"
10 9/32" MAX.

S53005A

A Technical Publication of

SYLVANIA ELECTRIC
PRODUCTS INC.

EMPORIUM, PA.

CHARACTERISTICS

GENERAL DATA

Focusing Method . . . . . Electrostatic

Deflection Method . . . . . Electrostatic

Types*	5ADP1 5ADP1A 5ADP1B	5ADP2 5ADP2A 5ADP2B	5ADP7 5ADP7A 5ADP7B	5ADP11 5ADP11A 5ADP11B	5ADP31A
Fluorescence	Green	Green	Blue	Blue	Green
Phosphorescence	—	Green	Yellow	—	Green
Persistence	Medium	Medium	Long	Short	Medium

Faceplate

5ADP- . . . . . Clear

5ADP-A, 5ADP-B . . . . . Clear, Aluminized

*In addition to the types shown, the 5ADP-, 5ADP-A, and 5ADP-B can be supplied with several other screen phosphors.

ELECTRICAL DATA

Heater Voltage . . . . . 6.3 Volts

Heater Current . . . . . 0.6 ± 10 % Ampere

Direct Interelectrode Capacitances

	Min.	Max.
Cathode to All Other Electrodes	3.1	5.8 μμf
Grid No. 1 to All Other Electrodes	4.2	7.9 μμf
Between Deflecting Plate 1-2	1.7	3.1 μμf
Between Deflecting Plates 3-4	0.7	1.3 μμf
Deflecting Plate 1[1] to All Other Electrodes Except D2	2.7	6.1 μμf
Deflecting Plate 2[1] to All Other Electrodes Except D1	2.7	6.1 μμf
Deflecting Plate 3[1] to All Other Electrodes Except D4	2.1	4.0 μμf
Deflecting Plate 4[1] to All Other Electrodes Except D3	2.1	5.0 μμf

MECHANICAL DATA

Minimum Useful Screen Diameter . . . . . 4 ½ Inches

Bulb Contact (Recessed Small Ball Cap) J1-22

Bulb J42K

Base (Medium Shell Diheptal 12-Pin) B12-37

Basing 14J

Base Alignment

D1-D2 Trace Aligns with Pin No. 5 and Tube Axis . . . ±10 Degrees

Positive Voltage on D1 Deflects Beam Approx. Toward Pin No. 5

Positive Voltage on D3 Deflects Beam Approx. Toward Pin No. 2

Angle Between Traces D1-D2 and D3-D4

5ADP- . . . . . 90 ± 1 Degrees

5ADP-A, 5ADP-B . . . . . 90 ± 0.8 Degrees

Bulb Contact Alignment

J1-22 Contact Aligns with D1-D2 Trace . . . . . ±10 Degrees

J1-22 Contact on Same Side as Pin No. 5

Weight (Approx.) . . . . . 2 ¼ Pounds

QUICK REFERENCE DATA

Oscilloscope Tube
5″ Direct Viewed
Round Glass Type
Flat Clear Faceplate
Electrostatic Focus
Electrostatic Deflection
5ADP-A, 5ADP-B—Aluminized and Closer Tolerances
5ADP-B—Lower Minimum A3 Voltage

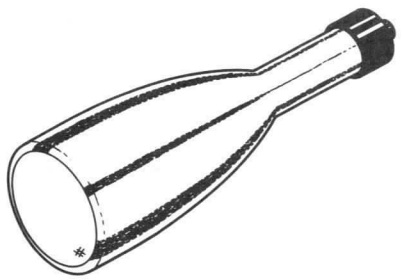

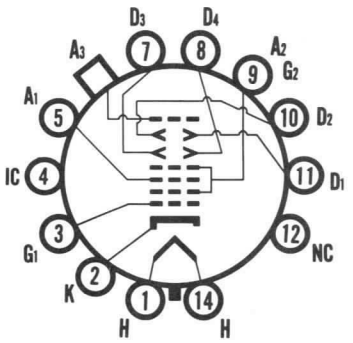

14-J

SYLVANIA
ELECTRONIC TUBES

A Division of
Sylvania Electric Products Inc.

PICTURE TUBE
OPERATIONS

SENECA FALLS, NEW YORK

Prepared and Released By The
TECHNICAL PUBLICATIONS SECTION
EMPORIUM, PENNSYLVANIA

MAY, 1962

File Under
SPECIAL AND GENERAL
PURPOSE CATHODE RAY TUBES

RATINGS

MAXIMUM RATINGS (Absolute Maximum Values)

Maximum Anode No. 3 Voltage	6600 Volts	dc
Minimum Anode No. 3 Voltage (5ADP-, 5ADP-B)	1500 Volts	dc
Minimum Anode No. 3 Voltage (5ADP-A)	2500 Volts	dc
Anode No. 2 Voltage[2]	2860 Volts	dc
Radio of Anode No. 3 Voltage to Anode No. 2 Voltage	2.3:1 Max.	
Anode No. 1 Voltage	1100 Volts	dc
Grid No. 1 Voltage		
Negative Bias Value	200 Volts	dc
Positive Bias Value	0 Volts	dc
Positive Peak Value	2 Volts	
Peak Heater-Cathode Voltage		
Heater Negative with Respect to Cathode	180 Volts	dc
Heater Positive with Respect to Cathode	180 Volts	dc
Peak Voltage Between Anode No. 2 and Any Deflection Plate	550 Volts	

TYPICAL OPERATING CONDITIONS

Anode No. 3 Voltage	3000 Volts	dc
Anode No. 2 Voltage	1500 Volts	dc
Anode No. 1 Voltage for Focus	300 to 515 Volts	dc
Grid No. 1 Voltage Required for Cutoff[3]	−34 to −56 Volts	dc
Deflection Factor		
Deflecting Plates 1-2[4]	40 to 50 Volts	dc/Inch
Deflecting Plates 3-4[5]	30.5 to 37.5 Volts	dc/Inch
Modulation[6,13]	45 Volts	Max.
Line Width[6,13]	.030 Inches	Max.
P1 Light Output[6,13] (5ADP-)	15 Ft. L.	Min.
P1 Light Output[6,13] (5ADP-A, 5ADP-B)	22 Ft. L.	Min.
Deflection Factor Uniformity[8] (5ADP-)	2 Percent	Max.
Deflection Factor Uniformity[7] (5ADP-A, 5ADP-B)	1.5 Percent	Max.
Pattern Distortion with 75 % Useful Scan[9] (5ADP-)	2 ½ Percent	Max.
Pattern Distortion with 100 % Useful Scan[10] (5ADP-A, 5ADP-B)	1.5 Percent	Max.
Undeflected Spot Position[11]	Within a 5/16 Inch Radius Circle	
Useful Scan	± 2 Inches From Tube Face Center or a Total 4 Inches Minimum	

CIRCUIT VALUES

Grid No. 1 Circuit Resistance	1.5 Megohms	Max.
Resistance in Any Deflecting Plate Circuit[12]	5 Megohms	Max.

NOTES:

1. *Deflecting Plate 1 is Pin No. 11*
   Deflecting Plate 2 is Pin No. 10
   Deflecting Plate 3 is Pin No. 7
   Deflecting Plate 4 is Pin No. 8
2. *The product of the Anode No. 2 Voltage and the Average Anode No. 2 Current should be limited to 6 watts.*
3. *Visual extinction of undeflected focused spot.*
4. *Deflecting Plates 1-2 are nearer the screen.*
5. *Deflecting plates 3-4 are nearer the base.*
6. *Measured in accordance with MIL-E-1.*
7. *The deflection factor (for both D1-D2 and D3-D4 plate pairs separately) for any deflection of less than 90 % of the useful scan will not differ from the deflection factor for a deflection at 30 % of the useful scan by more than 1 ½ %.*
8. *The deflection factor (for both D1-D2 and D3-D4 plate pairs separately) for a deflection of less than 75 % of the useful scan will not differ from the deflection factor for a deflection at 25 % of the useful scan by more than the indicated value.*
9. *All sides of a raster pattern adjusted so its widest points just touch the sides of a 3.075 inch square will fall within the area bounded by the 3.075 inch square and an inscribed 2.925 inch square.*
10. *All edges of a raster pattern adjusted so its widest points just touch the sides of a 4.000 inch square will fall within the area bounded by the 4.000 inch square and an inscribed 3.880 inch square, except at the corners where the geometry of the tube makes this impossible.*
11. *Centered on tube face with the tube shielded and with all deflection plates connected to Anode No. 2.*
12. *It is recommended that the deflecting electrode circuit resistances be approximately equal.*
13. *Anode No. 3 current = 25 μa when making this measurement on Type 5ADP-.*

WARNING:

X-ray radiation shielding may be necessary to protect against possible danger of personal injury from prolonged exposure at close range if this tube is operated at higher than the manufacturer's Maximum Rated Anode Voltage or 16,000 volts, whichever is less.

OUTLINE

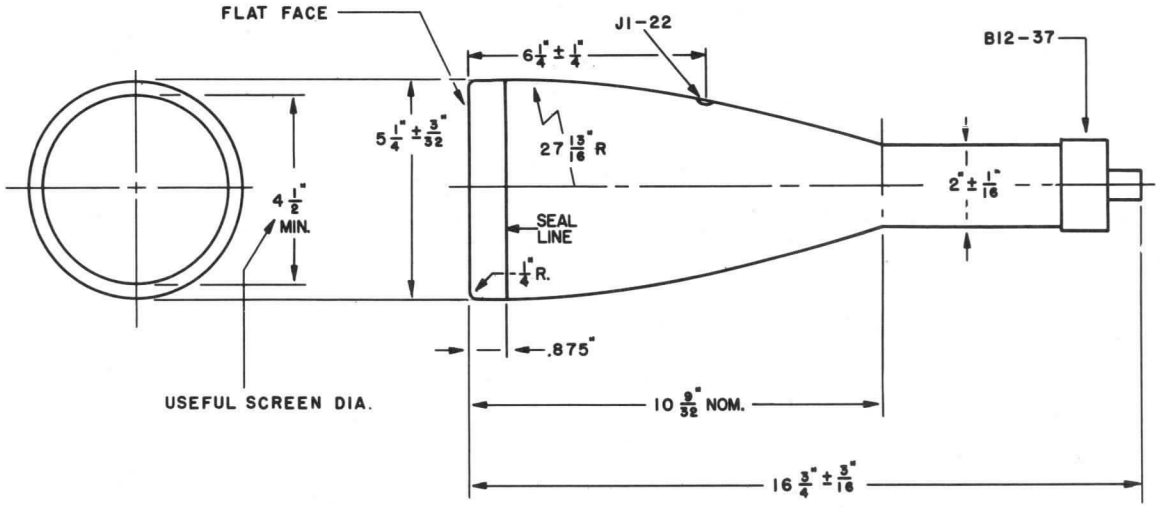

S58013

SYLVANIA

engineering data service

SYLVANIA
5AHP4A
5AHP7*

CHARACTERISTICS

GENERAL DATA

Focusing Method	Electrostatic
Deflecting Method	Magnetic
Deflection Angle (Approx.)	53 Degrees
Phosphor	Aluminized P4
Fluorescence	White
Persistence	Short to Medium
Faceplate	Clear

ELECTRICAL DATA

Heater Voltage	6.3 Volts
Heater Current (Approx.)	0.6 Ampere
Direct Interelectrode Capacitances (Approx.)	
Cathode to All Other Electrodes	5 μμf
Grid No. 1 to All Other Electrodes	6 μμf

MECHANICAL DATA

Minimum Useful Screen Diameter	4¼ Inches
Bulb Contact (Recessed Small Ball Cap)	J1-22
Base (Medium Shell Octal 8-Pin)	B8-11 or B8-65
Basing	8EF
Bulb Contact Aligns with Pin No. 5	±10 Degrees

RATINGS

MAXIMUM RATINGS (Absolute Maximum Values)

Anode Voltage	11,000 Volts dc
Grid No. 4 (Focusing Electrode) Voltage	−550 to +1100 Volts dc
Grid No. 2 Voltage	770 Volts dc
Grid No. 1 Voltage	
Negative Bias Value	200 Volts dc
Positive Bias Value	0 Volts dc
Positive Peak Value	0 Volts
Peak Heater-Cathode Voltage	
Heater Negative with Respect to Cathode	200 Volts
Heater Positive with Respect to Cathode	200 Volts

TYPICAL OPERATING CONDITIONS

Anode Voltage[1]	7,000 Volts dc
Grid No. 4 Voltage for Focus[3]	0 to +250 Volts dc
Grid No. 2 Voltage	300 Volts dc
Grid No. 1 Voltage[2]	−33 to −77 Volts dc
Line Width[3,4]	0.40 MM Max.

CIRCUIT VALUES

Grid No. 1 Circuit Resistance	1.5 Megohms Max.

NOTES:

1. *Brilliance and definition decrease with decreasing anode voltage. In general, the anode voltage should not be less than 4,000 volts.*
2. *Visual extinction of undeflected focused spot.*
3. *With Eg1 adjusted for Ib = 100 μa and beam focused for minimum width of individual lines at center of screen.*
4. *Measured by compressed raster method, using 35 to 105 line pattern.*

QUICK REFERENCE DATA

Special Purpose Tube
5" Direct Viewed
Round Glass Type
Magnetic Deflection
Electrostatic Focus
High Resolution

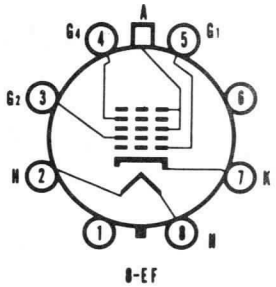

SYLVANIA ELECTRIC PRODUCTS INC.
TELEVISION PICTURE TUBE DIVISION
SENECA FALLS, NEW YORK

Prepared and Released By The
TECHNICAL PUBLICATIONS SECTION
EMPORIUM, PENNSYLVANIA
FEBRUARY, 1957

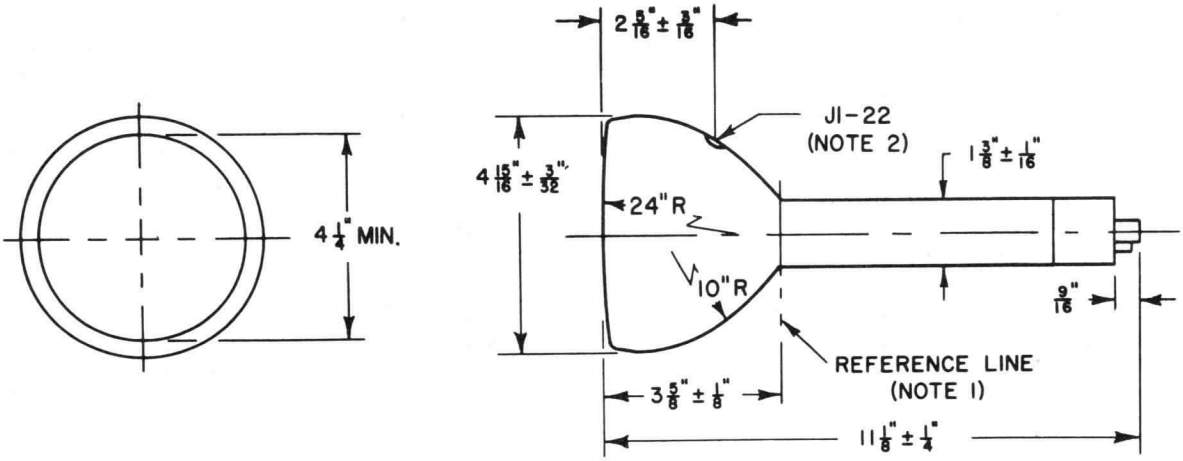

DIAGRAM NOTES:

1. *Reference line is determined by the point where 1.430 ± .003 inch diameter ring gauge 2 inches long will stop.*
2. *Anode contact (J1-22) aligns with base pin No. 5, ±10°.*

*5AHP7

Type 5AHP7 is similar to 5AHP4A except that it has non-aluminized P7 phosphor, which has blue-white fluorescence, yellow phosphorescence and long persistence.

Type 5AHP—can be supplied with several other phosphors, either aluminized or non-aluminized, on special order. Aluminized types are identified by the suffix "A" on the type number.

WARNING:

X-ray radiation shielding may be necessary to protect against possible danger of personal injury from prolonged exposure at close range if this tube is operated at higher than the manufacturer's Maximum Rated Anode Voltage or 16,000 volts, whichever is less.

SYLVANIA

engineering data service

SYLVANIA

5AMP1 5AMP1A

5AMP* 5AMP-A*

CHARACTERISTICS

GENERAL DATA

Focusing Method	Electrostatic
Deflecting Method	Electrostatic

Types*	Fluorescence	Phosphorescence	Persistence
5AMP1	Green	——	Medium
5AMP1A	Green	——	Medium
5AMP2	Blue - Green	Green	Long
5AMP2A	Blue - Green	Green	Long
5AMP7	Blue - White	Yellow	Long
5AMP7A	Blue - White	Yellow	Long
5AMP11	Blue	——	Short
5AMP11A	Blue	——	Short

Faceplate . . . . . Flat, Clear

*In addition to the types shown, the 5AMP- can be supplied with several other screen phosphors.

ELECTRICAL DATA

Heater Voltage			6.3 Volts
Heater Current			0.6 ± 10% Ampere
Direct Interelectrode Capacitances		MIN.	MAX.
Cathode to All Other Electrodes		2.7	4.9 μμf
Grid No. 1 to All Other Electrodes		2.9	5.5 μμf
Between Deflecting Plates 1-2		2.1	3.9 μμf
Between Deflecting Plates 3-4		1.3	2.5 μμf
Deflecting Plate 1 to All Other Electrodes		4.3	7.9 μμf
Deflecting Plate 2 to All Other Electrodes		4.0	7.4 μμf
Deflecting Plate 3 to All Other Electrodes		2.9	5.5 μμf
Deflecting Plate 4 to All Other Electrodes		2.6	4.8 μμf

MECHANICAL DATA

Minimum Useful Screen Diameter	4½ Inches
Neck Contacts (Small Ball Caps)	J1-25
Bulb	J42P
Base (Medium Shell Diheptal 12-Pin)	B12-37
Basing	14U
Base Alignment	
D1-D2 Trace Aligns with Pin No. 5 and Tube Axis	± 10 Degrees
Positive Voltage on D1 deflects Beam approx. Toward Pin No. 5	
Positive Voltage on D3 deflects Beam approx. Toward Pin No. 2	
Angle Between D1-D2 trace and D3-D4 trace	90 ± 1 Degrees
Weight (approx.)	2¼ Pounds

QUICK REFERENCE DATA

5" Direct Viewed
Round Glass Type
Flat, Clear Faceplate
Electrostatic Focus
Electrostatic Deflection
Close Tolerances
High Deflection Sensitivity
A2 and deflection plate leads brought out neck.

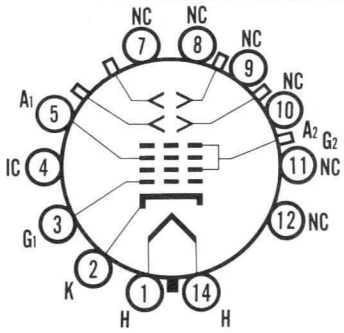

SYLVANIA
ELECTRONIC TUBES

A Division of
Sylvania Electric Products Inc.

PICTURE TUBE OPERATIONS
SENECA FALLS, NEW YORK

Prepared and Released By The
TECHNICAL PUBLICATIONS SECTION
EMPORIUM, PENNSYLVANIA

MARCH, 1960

File Under
SPECIAL AND GENERAL PURPOSE
CATHODE RAY TUBES

RATINGS

MAXIMUM RATINGS (Absolute Maximum Values)

Anode No. 2 Voltage[1]	6600 Volts dc
Anode No. 1 Voltage (Focusing Electrode)	1650 Volts dc
Grid No. 1 Voltage	
Negative Bias Value	220 Volts dc
Positive Bias Value	0 Volts dc
Positive Peak Value	0 Volts
Peak Heater-Cathode Voltage	
Heater Negative with Respect to Cathode	200 Volts
Heater Positive with Respect to Cathode	200 Volts
Peak Voltage Between Anode No. 2 and	
Any Deflection Plate	1320 Volts

TYPICAL OPERATING CONDITIONS

Anode No. 2 Voltage	2500 Volts dc
Anode No. 1 Voltage for Focus	0 to 300 Volts dc
Grid No. 1 Voltage Required for Cutoff[2]	−34 to −56 Volts dc
Deflection Factors	
Deflecting Plates 1-2[3]	40 to 50 Volts dc/Inch
Deflecting Plates 3-4[3]	20 to 25 Volts dc/Inch
Deflection Factor Uniformity[4]	1% Max.
Modulation[5]	45 Volts dc/Max.
Line Width "A"[5]	.032 Inches Max.
Anode No. 2 Current[5]	800 μAdc Max.
Pattern Distortion @ 75% Useful Scan[6]	2% Max.
Spot Position (Undeflected, Focused)[7]	Within a $\frac{5}{16}$ Inch Radius Circle
Useful Scan	
D1-D2	± 2 Inches From Tube Face Center or a Total of 4 Inches Minimum
D3-D4	± 1.25 Inches From Tube Face Center or a Total of 2.5 Inches Minimum

CIRCUIT VALUES

Grid No. 1 Circuit Resistance	1.5 Megohms Max.
Deflection Circuit Resistance[8]	1.0 Megohms Max.

NOTES:

1. *The product of the Anode No. 2 Voltage and Average Anode No. 2 Current should be limited to 6 watts.*
2. *Visual extinction of undeflected focused spot.*
3. *Deflection plates D1 and D2 are nearer the screen; deflecting plates D3 and D4 are nearer the base.*

NOTES: (Cont'd)

4. *The deflection factor (for both D1-D2 and D3-D4 plate pairs, separately) for any deflection of less than 75% of the useful scan will not differ from the deflection factor for a deflection at 25% of the useful scan by more than the indicated value.*
5. *Measured in accordance with MIL-E-1 on a P1 screen at a brightness of 15 foot Lamberts on a 2" x 2" focused raster.*
6. *Raster pattern adjusted so widest points just touch the sides of a 1.912 x 3.060 inch rectangle will fall within the area bounded by the 1.912 x 3.060 inch rectangle and an inscribed 1.837 x 2.940 inch rectangle.*
7. *Limit circle centered on tube face, with the tube shielded and with all deflection plates connected to Anode No. 2. Under stable operating conditions the spot will not shift with changes in intensity by more than .025 inch.*
8. *It is recommended that the deflecting electrode circuit resistances be approximately equal.*
9. *Types 5AMP1A, 5AMP2A, 5AMP7A and 5AMP11A are identical to the 5AMP1, 2, 7, 11 except for the following:*
   (a) Angle between D3-D4 trace and D1-D2 trace — 90° ± 0.8° Degrees
   (b) Pattern distortion at 100% of useful scan: All portions of a raster pattern adjusted so its widest points just touch the sides of a 2.500 by 4.000 inch rectangle will fall within the area bounded by the 2.500 by 4.000 inch rectangle and inscribed 2.420 by 3.912 inch rectangle.

OUTLINE

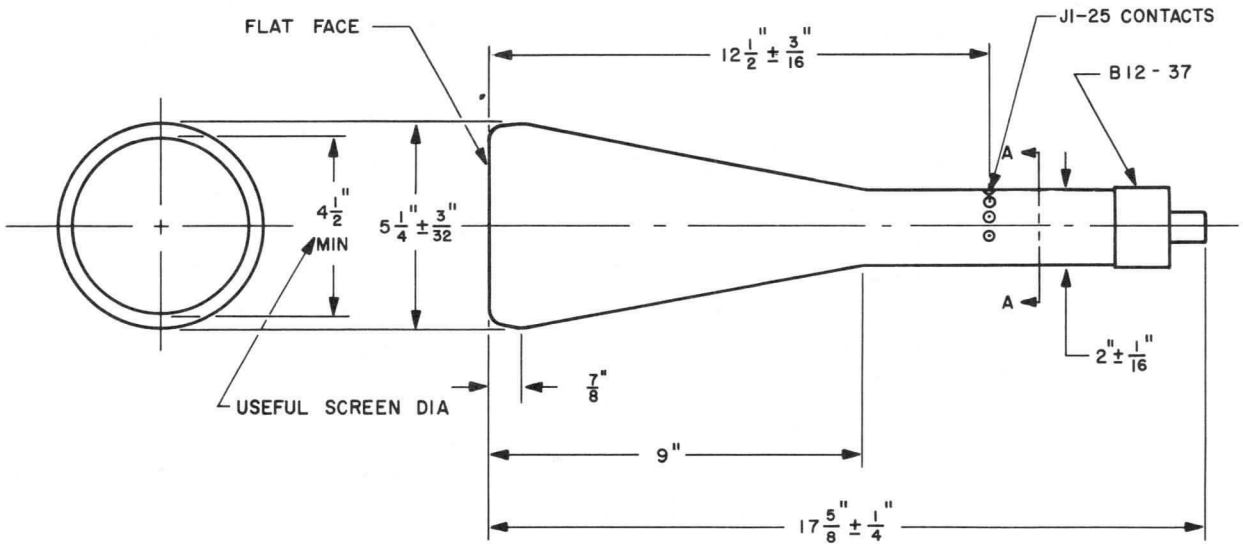

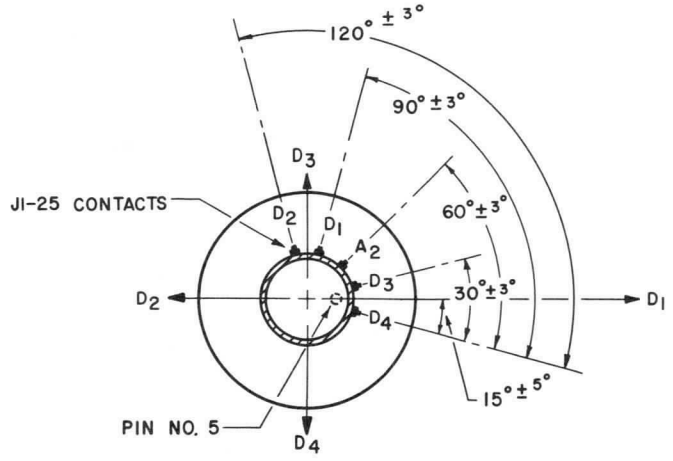

S58057

SECTION A-A-VIEW FROM BASE END OF TUBE

CHARACTERISTICS

GENERAL DATA

Focusing Method				Electrostatic
Deflection Method				Electrostatic
Types*	5AQP1	5AQP2	5AQP7	5AQP11
	5AQP1A	5AQP2A	5AQP7A	5AQP11A
	5AQP1B	5AQP2B	5AQP7B	5AQP11B
Fluorescence	Green	Green	Blue	Blue
Phosphorescence	—	Green	Yellow	—
Persistence	Medium	Medium	Long	Short
Faceplate				
5AQP-, 5AQP-A				Clear
5AQP-B				Clear, Aluminized

*In addition to the types shown, the 5AQP- can be supplied with several other screen phosphors.

ELECTRICAL DATA

Heater Voltage	6.3 Volts
Heater Current	0.6 ± 10 % Ampere

Direct Interelectrode Capacitances

	Min.	Max.
Cathode to All Other Electrodes	2.7	5.0 μμf
Grid No. 1 to All Other Electrodes	3.7	6.9 μμf
Between Deflecting Plates 1-2[1]	2.4	4.5 μμf
Between Deflecting Plates 3-4[1]	0.8	1.6 μμf
Deflecting Plate 1[1] to All Other Electrodes	5.0	9.3 μμf
Deflecting Plate 2[1] to All Other Electrodes	5.0	9.3 μμf
Deflecting Plate 3[1] to All Other Electrodes	3.3	6.3 μμf
Deflecting Plate 4[1] to All Other Electrodes	3.3	6.3 μμf

MECHANICAL DATA

Minimum Useful Screen Diameter	4½ Inches
Bulb	J42P
Base (Medium Shell Diheptal 12-Pin)	B12-37
Basing	14G
Base Alignment	
D1-D2 Trace Aligns With Pin No. 5 and Tube Axis[4]	±10 Degrees
Angle Between D1-D2 and D3-D4 Traces (5AQP-)[4]	90 ± 1 Degree
Angle Between D1-D2 and D3-D4 Traces (5AQP-A, 5AQP-B)[4]	90 ± 0.8 Degree
Weight (Approx.)	2 Pounds

RATINGS

MAXIMUM RATINGS (Absolute Maximum Values)

Maximum Anode No. 2 Voltage[2]	4400 Volts	dc
Minimum Anode No. 2 Voltage (5AQP-B Only)	1500 Volts	dc
Anode No. 1 Voltage	1650 Volts	dc
Grid No. 1 Voltage		
Negative Bias Value	220 Volts	dc
Positive Bias Value	0 Volts	dc
Positive Peak Value	0 Volts	
Peak Heater-Cathode Voltage		
Heater Negative with Respect to Cathode	200 Volts	
Heater Positive with Respect to Cathode	200 Volts	
Peak Voltage Between Anode No. 2 and Any Deflecting Plate	400 Volts	

QUICK REFERENCE DATA

Oscilloscope Tube
5″ Direct Viewed
Round Glass Type
Electrostatic Deflection
Electrostatic Focus
Flat Face
Clear Faceplate
5AQP-A Closer Tolerances
5AQP-B Closer Tolerances, Aluminized

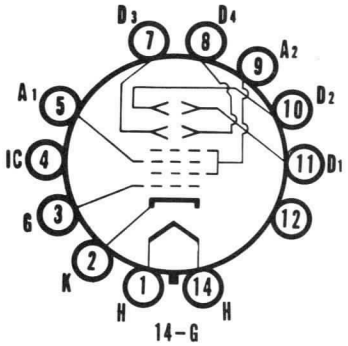

SYLVANIA
ELECTRONIC TUBES
A Division of
Sylvania Electric Products Inc.
PICTURE TUBE OPERATIONS
SENECA FALLS, NEW YORK

Prepared and Released By The
TECHNICAL PUBLICATIONS SECTION
EMPORIUM, PENNSYLVANIA
MARCH, 1962

File Under
SPECIAL AND GENERAL
PURPOSE CATHODE RAY TUBES

TYPICAL OPERATING CONDITIONS

Anode No. 2 Voltage	2500 Volts	dc
Anode No. 1 Voltage for Focus	0 to 300 Volts	dc
Grid No. 1 Voltage Required for Cutoff[3]	−34 to −56 Volts	dc
Deflection Factor[4]		
Deflecting Plates 1-2	40 to 50 Volts	dc/Inch
Deflecting Plates 3-4	31.5 to 38.5 Volts	dc/Inch
P1 Light Output[5]	15 Ft. L.	Min.
Modulation[5]	40 Volts	dc Max.
Line Width A[5]	.030 Inches	Max.
Anode No. 2 Current[5]	400 μa	dc Max.
Deflection Factor Uniformity[6]	1 Percent	Max.
Pattern Distortion at 75 % of Useful Scan[7] (5AQP-)	2 Percent	Max.
Pattern Distortion at 100 % of Useful Scan[8] (5AQP-A, 5AQP-B)	1 Percent	Max.
Spot Position[9]	Within a 5/16 Inch Radius Circle	
Useful Scan (Centered on Tube Face)	4 x 4 Inches	Min.

CIRCUIT VALUES

Grid No. 1 Circuit Resistance	1.5 Megohms Max.	
Deflection Circuit Resistance[10]	1.0 Megohms Max.	

NOTES:

1. *Deflecting Plate 1 is Pin No. 11*
   Deflecting Plate 2 is Pin No. 10
   Deflecting Plate 3 is Pin No. 7
   Deflecting Plate 4 is Pin No. 8
2. *The product of Anode No. 2 voltage and average Anode No. 2 current should be limited to 6.0 watts.*
3. *Visual extinction of undeflected focused spot.*
4. *Positive voltage on D1 deflects beam approximately toward Pin No. 5.*
   Positive voltage on D3 deflects beam approximately toward Pin No. 2.
5. *Measured in accordance with MIL-E-1 specification on a P1 screen at a brightness of 15 Ft. L. on a raster size of 2 x 2 inches.*
6. *The deflection factors at 75 % of useful scan and at 25 % of useful scan shall not differ by more than the indicated value.*
7. *All edges of a raster pattern, adjusted so its widest points just touch the sides of a 3.075 inch square, will fall within the area bounded by the 3.075 inch square and an inscribed 2.925 inch square.*
8. *The edges of a raster pattern, adjusted so its widest points just touch the sides of a 4.000 inch square, will fall within the area bounded by the 4.000 inch square and an inscribed 3.916 inch square, except at the corners where the geometry of the tube makes this impossible.*
9. *Centered on the tube face with the tube shielded and with all deflection plates connected to Anode No. 2.*
10. *It is recommended that the deflecting electrode circuit resistances be approximately equal.*

OUTLINE

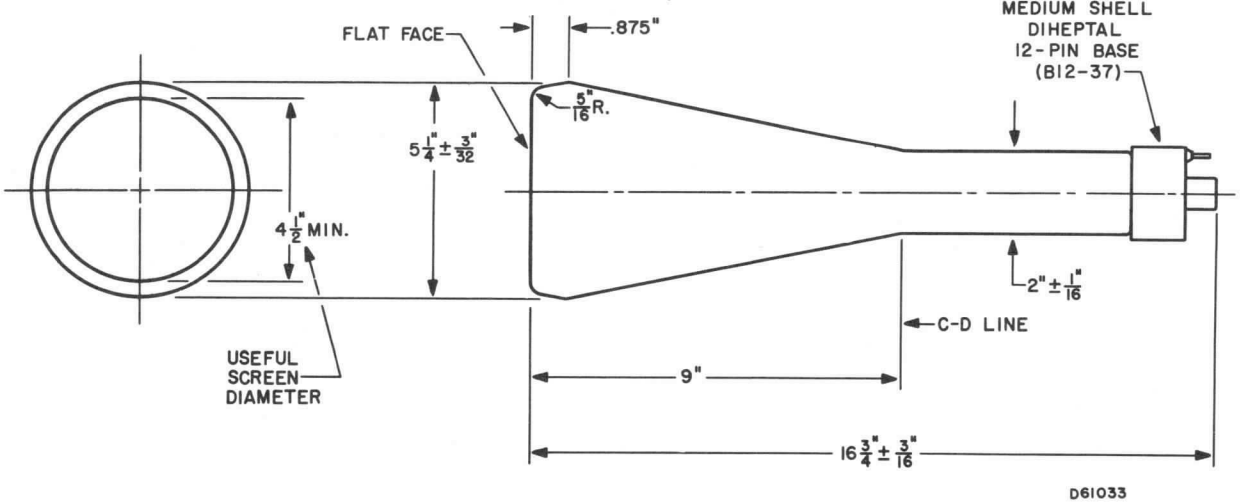

SYLVANIA

engineering data service

SYLVANIA
5AUP24
5AUP-*

CHARACTERISTICS

GENERAL DATA

Focusing Method	Electrostatic
Deflection Method	Magnetic
Deflection Angles (Approx.)	40°
Prosphor	Aluminized P-24
Fluorescence	Green
Phosphorescence	Green
Persistence	Short
Faceplate	Clear, Flat

*In addition to the type shown, the 5AUP– can be supplied with several other screen phosphors.

ELECTRICAL DATA

Heater Voltage	6.3	Volts
Heater Current	0.6 ± 10%	Amperes
Direct Interelectrode Capacitances (Approx.)		
Cathode to All Other Electrodes	5	μμfd
Grid No. 1 to All Other Electrodes	8	μμfd
Ion Trap	No Ion Trap Required	

MECHANICAL DATA

Minimum Useful Screen Dimensions (Maximum Assured)	4¼	Inches
Overall Length	12½ ± ⅜	Inches
Bulb Contact (Recessed Small Cavity Cap)	J1-21	
Base (Small Shell Duo Decal 7 Pin)	B7-51	
Basing	12C	
Bulb	J40L	
External Conductive Neck Coating to Anode[1]	500 μμf	Max.
	100 μμf	Min.
Weight (Approx.)	1.4	Pounds

RATINGS

MAXIMUM RATINGS (Absolute Maximum Values)

Maximum Anode Voltage	30,000 Volts	dc
Minimum Anode Voltage	20,000 Volts	dc
Grid No. 3 Voltage (Focusing Electrode)	6600 Volts	dc
Grid No. 2 Voltage	385 Volts	dc
Grid No. 1 Voltage		
Negative Bias Value	155 Volts	dc
Negative Peak Value	220 Volts	
Positive Bias Value	0 Volts	dc
Positive Peak Value	2 Volts	
Peak Heater-Cathode Voltage		
Heater Negative with Respect to Cathode During Warm-up Period not to Exceed 15 Seconds	450 Volts	
After Equipment Warm-up Period	165 Volts	
Heater Positive with Respect to Cathode	165 Volts	

TYPICAL OPERATING CONDITIONS

Anode Voltage	27,000 Volts	dc
Grid No. 3 Voltage for Focus (Ib = 200 μa)	4600 to 5800 Volts	dc
Grid No. 2 Voltage	200 Volts	dc
Grid No. 1 Voltage for Spot Cutoff[2]	–40 to –100 Volts	dc

CIRCUIT VALUES

Grid No. 1 Circuit Resistance	1.5 Megohms Max.

QUICK REFERENCE DATA

Color Flying Spot Scanner Tube
5" Round Glass Type
Flat Faceplate
Clear Faceplate
Magnetic Deflection
Electrostatic Focus
No Ion Trap
Aluminized Screen

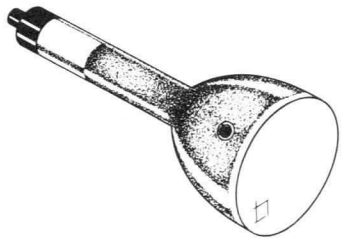

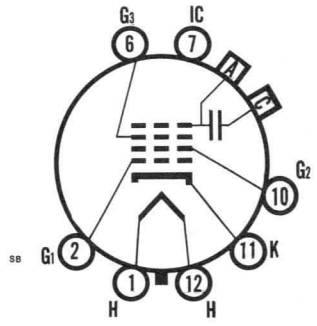

12-C

SYLVANIA
ELECTRONIC TUBES

A Division of
Sylvania Electric Products Inc.

PICTURE TUBE OPERATIONS
SENECA FALLS, NEW YORK

Prepared and Released By The
TECHNICAL PUBLICATIONS SECTION
EMPORIUM, PENNSYLVANIA

OCTOBER, 1961

File Under
SPECIAL AND GENERAL PURPOSE
CATHODE RAY TUBES

NOTE:

1. External conductive neck coating must be grounded.

WARNING:

X-ray radiation shielding may be necessary to protect against possible danger of personal injury from prolonged exposure at close range if this tube is operated at higher than the manufacturer's Maximum Rated Anode Voltage or 16,000 volts, whichever is less.

OUTLINE

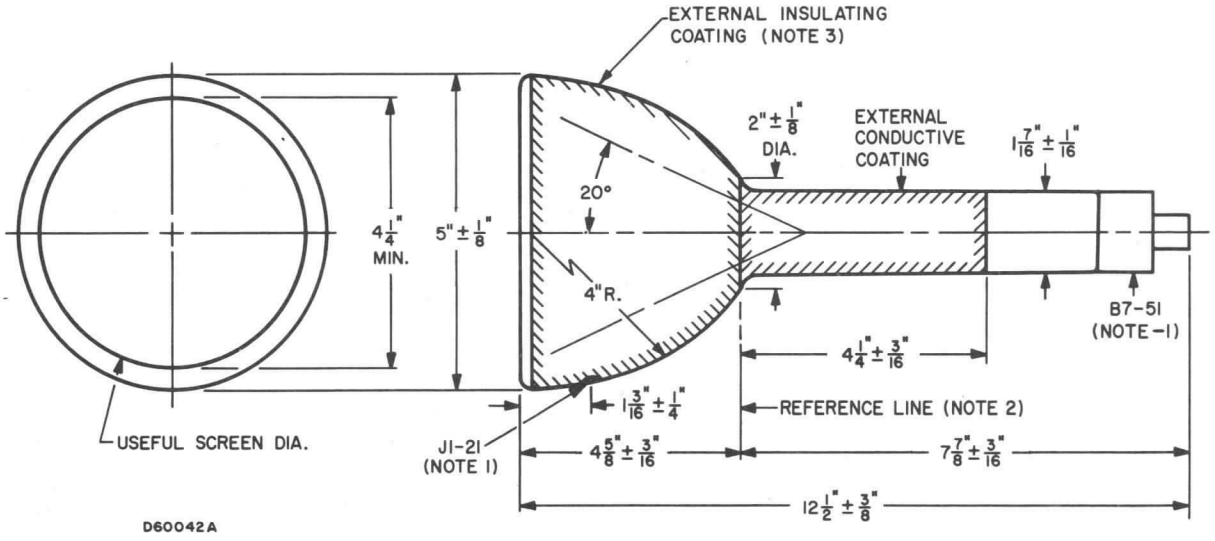

DIAGRAM NOTES:

1. *The plane through the tube axis and vacant pin position No. 3 may vary from the plane through the tube axis and anode terminal by an angular tolerance (measured about the tube axis) of ± 10°. Anode terminal is on the same side as vacant pin position No. 3.*
2. *With tube neck inserted through flared end of reference line gauge (JEDEC No. 110) and with the tube seated in the gauge, the reference line is determined by intersection of plane CC' of the gauge with the glass funnel.*
3. *The 5AUP– should be handled by the neck only. Fingerprints or dust on the insulating coating on the bulb may cause electrical breakdown during humid weather.*

SYLVANIA

engineering data service

SYLVANIA

5AXP4

CHARACTERISTICS

GENERAL DATA

Focusing Method	Self Focusing (Electrostatic)
Deflecting Method	Magnetic
Deflecting Angle (approx.)	53 Degrees
Phosphor	P4
Fluorescence	White
Persistence	Medium
Faceplate	Clear Glass

ELECTRICAL DATA

Heater Voltage	6.3 Volts
Heater Current	0.6 Ampere
Direct Interelectrode Capacitances	
Cathode to All Other Electrodes	5 $\mu\mu$f
Grid No. 1 to All Other Electrodes	6 $\mu\mu$f

MECHANICAL DATA

Overall Length	$10\frac{3}{8} \pm \frac{3}{8}$"
Maximum Diameter	$4\frac{15}{16} \pm \frac{3}{32}$"
Minimum Useful Screen Diameter	$4\frac{1}{4}$"
Bulb Contact (Recessed Small Cavity Cap)	J1-21
Base (Small Shell Duodecal 5-Pin)	B5-57
Basing	12S

RATINGS

MAXIMUM RATINGS (Design Center Values)

Anode Voltage	18,000 Volts dc
Grid No. 2 (and Grid No. 4) Voltage	500 Volts dc
Grid No. 1 Voltage	
Negative Bias Value	125 Volts dc
Positive Bias Value	0 Volts dc
Positive Peak Value	2 Volts
Peak Heater-Cathode Voltage	
Heater Negative with Respect to Cathode	
During Warm-Up Not to Exceed 15 Seconds	410 Volts
After Equipment Warm-Up	180 Volts
Heater Positive with Respect to Cathode	180 Volts

TYPICAL OPERATING CONDITIONS

Anode Voltage	14,000 Volts dc
Grid No. 2 (and Grid No. 4) Voltage	300 Volts dc
Grid No. 1 Voltage for Cutoff[1]	-28 to -72 Volts dc

CIRCUIT VALUES

Grid No. 1 Circuit Resistance	1.5 Megohms Max.

NOTE:

1. Visual Extinction of Raster.

QUICK REFERENCE DATA

Receiver Check Tube
5" Round, All Glass
Self Focusing (Electrostatic)
No Ion Trap
Magnetic Deflection

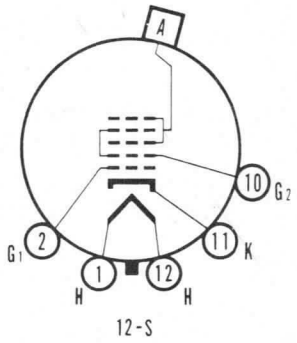

12-S

SYLVANIA ELECTRIC PRODUCTS INC.
TELEVISION PICTURE TUBE DIVISION
SENECA FALLS, NEW YORK

Prepared and Released By The TECHNICAL PUBLICATIONS SECTION EMPORIUM, PENNSYLVANIA

Rev. 1
MAY 1955

SYLVANIA

5AXP4

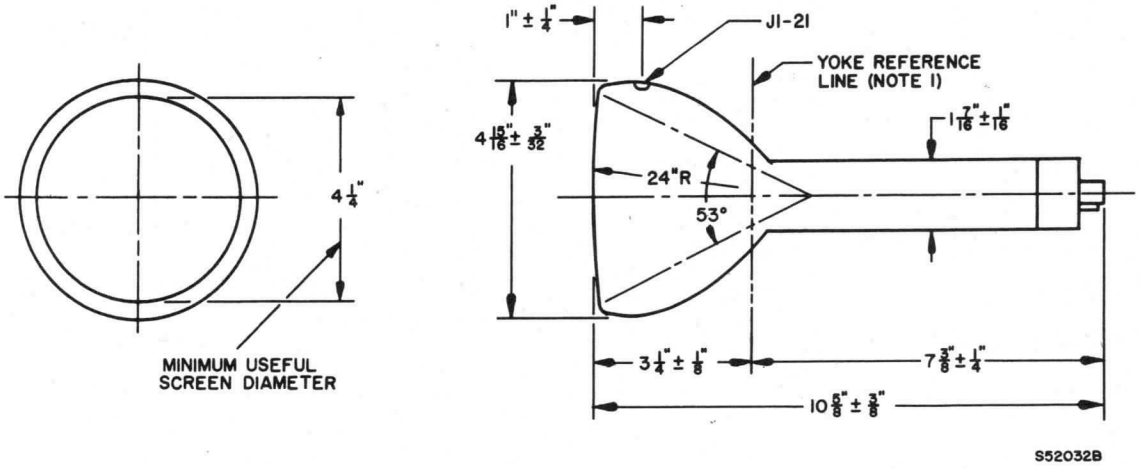

DIAGRAM NOTES:

1. *The yoke reference line is determined by plane C-C' of JETEC gauge 116, with the gauge resting against the bulb cone.*
2. *Anode contact (J1-21) aligns with vacant base pin position No. 6 ±30 degrees.*

WARNING:

X-ray radiation shielding may be necessary to protect against possible danger of personal injury from prolonged exposure at close range if this tube is operated at higher than the manufacturer's Maximum Rated Anode Voltage or 16,000 volts, whichever is less.

CHARACTERISTICS

GENERAL DATA

Focusing Method	Magnetic
Deflecting Method	Magnetic
Deflection Angle (approx.)	70 Degrees

Types*	5BCP1	5BCP4	5BCP7	5BCP11
Fluorescence	Green	White	Blue	Blue
Phosphorescence	—	—	Yellow	—
Persistence	Medium	Medium	Long	Short

Faceplate . . . . . Clear

**In addition to the types shown, the 5BCP- can be supplied with several other screen phosphors.*

ELECTRICAL DATA

Heater Voltage	6.3 Volts
Heater Current	0.3 ± 10% Ampere
Direct Interelectrode Capacitances (approx.)	
Cathode to All Other Electrodes	3.7 $\mu\mu$f
Grid No. 1 to All Other Electrodes	3.5 $\mu\mu$f

MECHANICAL DATA

Minimum Useful Screen Diameter	4¼ Inches
Bulb Contact (Recessed Small Ball Cap)	J1-22
Base	E9-37
Basing[1]	9HD
Bulb Contact Alignment	Plane of J1-22 Contact Passes Halfway Between Pins No. 1 and No. 9. ± 10 Degrees

J1-22 Contact on Same Side as Pins No. 1 and No. 9

RATINGS

MAXIMUM RATINGS (Absolute Maximum Values)

Anode Voltage	11,000 Volts dc
Anode Input	6 Watts
Grid No. 1 Voltage	
Negative Bias Value	220 Volts dc
Positive Bias Value	0 Volts dc
Positive Peak Value	2 Volts dc
Peak Heater-Cathode Voltage	
Heater Negative with Respect to Cathode	200 Volts
Heater Positive with Respect to Cathode	200 Volts

TYPICAL OPERATING CONDITIONS

Anode Voltage	8,000 Volts dc
Grid No. 1 Voltage[2]	−25 to −75 Volts dc
Focusing Coil Current (approx.)[3]	56 to 84 Ma dc
Line Width "A" at I_b = 200 μa[4]	.011 Inches Max.
Spot Position[5]	¼ Inch

CIRCUIT VALUES

Grid No. 1 Circuit Resistance	1.5 Megohms Max.

QUICK REFERENCE DATA

Special Purpose Tube
5" Direct Viewed
Round Glass Type
Magnetic Deflection
Magnetic Focus
⅞" Diameter Neck

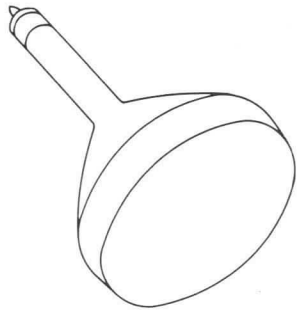

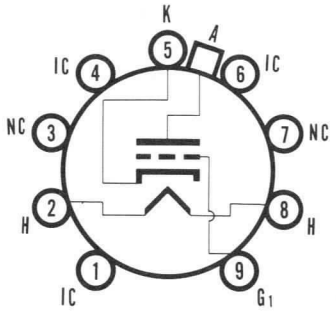

9HD

SYLVANIA
ELECTRONIC TUBES

A Division of
Sylvania Electric Products Inc.

PICTURE TUBE OPERATIONS
SENECA FALLS, NEW YORK

Prepared and Released By The
TECHNICAL PUBLICATIONS SECTION
EMPORIUM, PENNSYLVANIA

NOVEMBER, 1958

NOTES:

1. *A socket with a center opening to clear the tubulation should be used. Care should be taken in handling the tube to avoid damaging the exposed tubulation and bending the base pins.*
2. *Visual extinction of undeflected, focused spot.*
3. *For JETEC No. 127 focus coil, or equivalent, with the Grid No. 1 bias voltage adjusted to produce a beam current of 200 μa. Distance from reference line to center of gap on focus coil shall be 2 inches.*
4. *Measured in accordance with MIL-E-1C.*
5. *The center of the undeflected, unfocused spot will fall within a circle of 1/4 inch radius concentric with the center of the tube face, with the tube shielded.*

WARNING:

X-ray radiation shielding may be necessary to protect against possible danger of personal injury from prolonged exposure at close range if this tube is operated at higher than the manufacturer's Maximum Rated Anode Voltage or 16,000 volts, whichever is less.

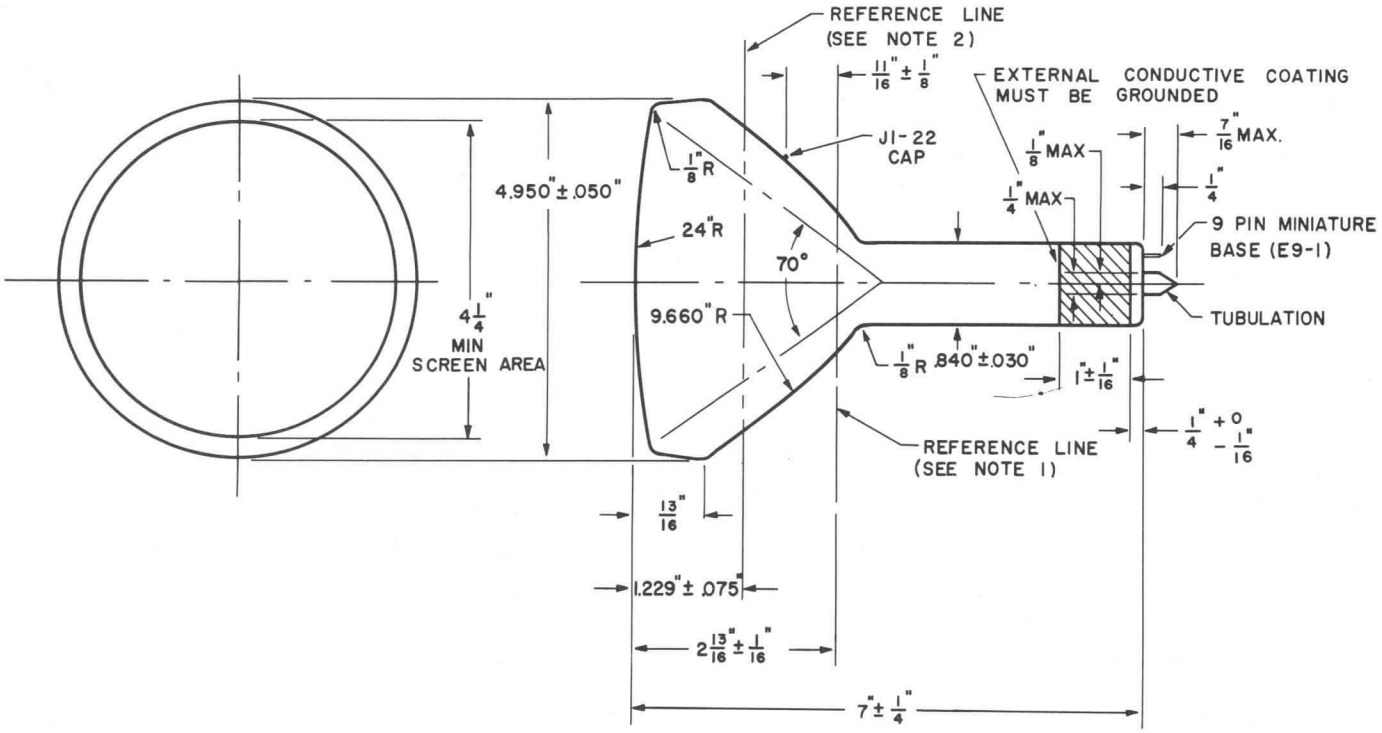

S 57024

DIAGRAM NOTES:

1. *Reference line is determined by the Point where leading edge of 1.640" reference line gauge No. 123 will stop.*
2. *Reference line is determined by the point where leading edge of a 4.625" ± .002 ring gauge will stop.*

CHARACTERISTICS

GENERAL DATA

Focusing Method	Electrostatic
Deflection Method	Electrostatic
Phosphors	Aluminized

Types*	Fluorescence	Phosphorescence	Persistence
5BGP1	Green	.....	Medium
5BGP2	Blue-Green	Green	Long
5BGP5	Blue	.....	Very Short
5BGP7	Blue-White	Yellow	Long
5BGP11	Blue	.....	Short
5BGP15	Blue-Green	.....	Extremely Short

Faceplate	Clear

**In addition to the types shown, the 5BGP- can be supplied with several other screen phosphors.*

ELECTRICAL DATA

Heater Voltage	6.3 Volts
Heater Current	$0.6 \pm 10\%$ Amperes
Direct Interelectrode Capacitances (approx.)	
Cathode to All Other Electrodes	4.8 $\mu\mu$f
Grid No. 1 to All Other Electrodes	6.7 $\mu\mu$f
D1 to D2	1.8 $\mu\mu$f
D3 to D4	1.3 $\mu\mu$f
D1 to All Other Electrodes Except D2	3.3 $\mu\mu$f
D2 to All Other Electrodes Except D1	3.3 $\mu\mu$f
D3 to All Other Electrodes Except D4	2.7 $\mu\mu$f
D4 to All Other Electrodes Except D3	2.7 $\mu\mu$f
Post Accelerator Helix Resistance	200 to 600 Megohms

MECHANICAL DATA

Minimum Useful Screen Diameter	$4\frac{1}{2}$ Inches
Anode No. 3 Contact (Recessed Small Cavity Cap)	J1-21
Bulb (Modified)	J42K
Base (Medium Shell Diheptal 12-Pin)	B12-37
Basing	14AF
Base Alignment	
D3-D4 trace aligns with Pin No. 1	± 10 Degrees
Positive Voltage on D1 deflects beam approx. toward Pin No. 4	
Positive Voltage on D3 deflects beam approx. toward Pin No. 1	
Angle Between traces D1-D2 and D3-D4	90 ± 1 Degrees
Bulb Contact Alignment	
J1-21 contact aligns with D1-D2 trace	± 10 Degrees
J1-21 contact on same side as Pin No. 4	

QUICK REFERENCE DATA

5" Direct Viewed
Flat Faceplate
Round Glass Type
Electrostatic Deflection
Electrostatic Focus
Helical Resistor Post Deflection Acceleration
High Deflection Sensitivity
High Deflection Accuracy
Aluminized Screen

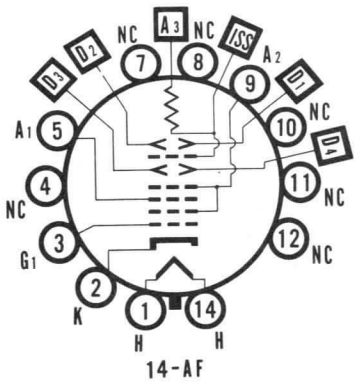

SYLVANIA
ELECTRONIC TUBES
A Division of
Sylvania Electric Products, Inc.
PICTURE TUBE OPERATIONS
SENECA FALLS, NEW YORK

Prepared and Released By The
TECHNICAL PUBLICATIONS SECTION
EMPORIUM, PENNSYLVANIA

APRIL, 1959

MAXIMUM RATINGS (Absolute Maximum Values)

Anode No. 2 Input	6	Watts	Max.
Anode No. 3 Voltage	13,200	Volts dc	
Isolation Shield Voltage	2300	Volts dc	
Anode No. 2 Voltage	2200	Volts dc	
Ratio of Anode No. 3 Voltage to Anode No. 2 Voltage	6 : 1	Maximum	
Anode No. 1 (Focus Electrode) Voltage	880	Volts dc	
Grid No. 1 Voltage			
Negative Bias Value	220	Volts dc	
Positive Bias Value	0	Volts dc	
Positive Peak Plate	2	Volts	
Peak Heater-Cathode Voltage			
Heater Negative with Respect to Cathode			
During Warm-up Period Not to Exceed 15 Seconds	200	Volts	
After Equipment Warm-up Period	140	Volts	
Heater Positive with Respect to Cathode	140	Volts	
Peak Voltage Between Anode No. 2 and Any Deflection Plate	550	Volts	

TYPICAL OPERATING CONDITIONS

Anode No. 3 Voltage[1]	10,000	Volts dc	
Isolation Shield Voltage[2]	1575 to 1700	Volts dc	
Anode No. 2 Voltage[3]	1670	Volts dc	
Anode No. 1 Voltage for Focus	180 to 590	Volts dc	
Grid No. 1 Voltage Required for Cutoff[4]	−50 to −80	Volts dc	
Deflection Factor[5]			
Deflection Plates 1-2	70 to 86	Volts dc/Inch	
Deflection Plates 3-4	28.4 to 34.8	Volts dc/Inch	
Pattern Distortion at 100% Useful Scan[6]	1%	Maximum	
Undeflected Spot Position[7] (Deviation from Center)	5	MM.	Max.
Useful Scan			
D1-D2	10	cm.	
D3-D4	6	cm.	

CIRCUIT VALUES

Grid No. 1 Circuit Resistance	1.5	Megohms	Max.

NOTES:

1. *It is recommended that the Anode No. 3 voltage be no less than 6000 volts for suitable light output.*
2. *The isolation shield and the lower end of the Post Accelerator helix are connected together within the tube. With the proper potential on this electrode combination, barrel and pin-cushion distortions are minimized.*
3. *Under the typical operating conditions listed the Anode No. 2 voltage is made variable from 1575 volts to 1850 volts to provide for astigmatism control. In order to maintain proper astigmatism adjustment as total cathode current is varied, it is recommended that the resistance in the Anode No. 2 circuit be limited to 12,500 ohms.*

NOTES: (Cont'd)

4. *Visual extinction of undeflected focused spot.*

5. *If use is made of the full deflection capabilities of the tube, the deflection plates will intercept part of the electron beam near the edge of the scan; hence a low impedance deflection plate drive is desirable.*

6. *With a 6 x 10 cm rectangular raster centered on the face of the tube, the raster edges will not deviate from straight parallel lines by more than 1 mm total on the left and right edges, nor by more than 0.5 mm total at the top and bottom.*

7. *Connect deflection plates to Anode No. 2.*

WARNING:

X-ray radiation shielding may be necessary to protect against possible danger of personal injury from prolonged exposure at close range if this tube is operated at higher than the manufacturer's Maximum Rated Anode Voltage or 16,000 volts, whichever is less.

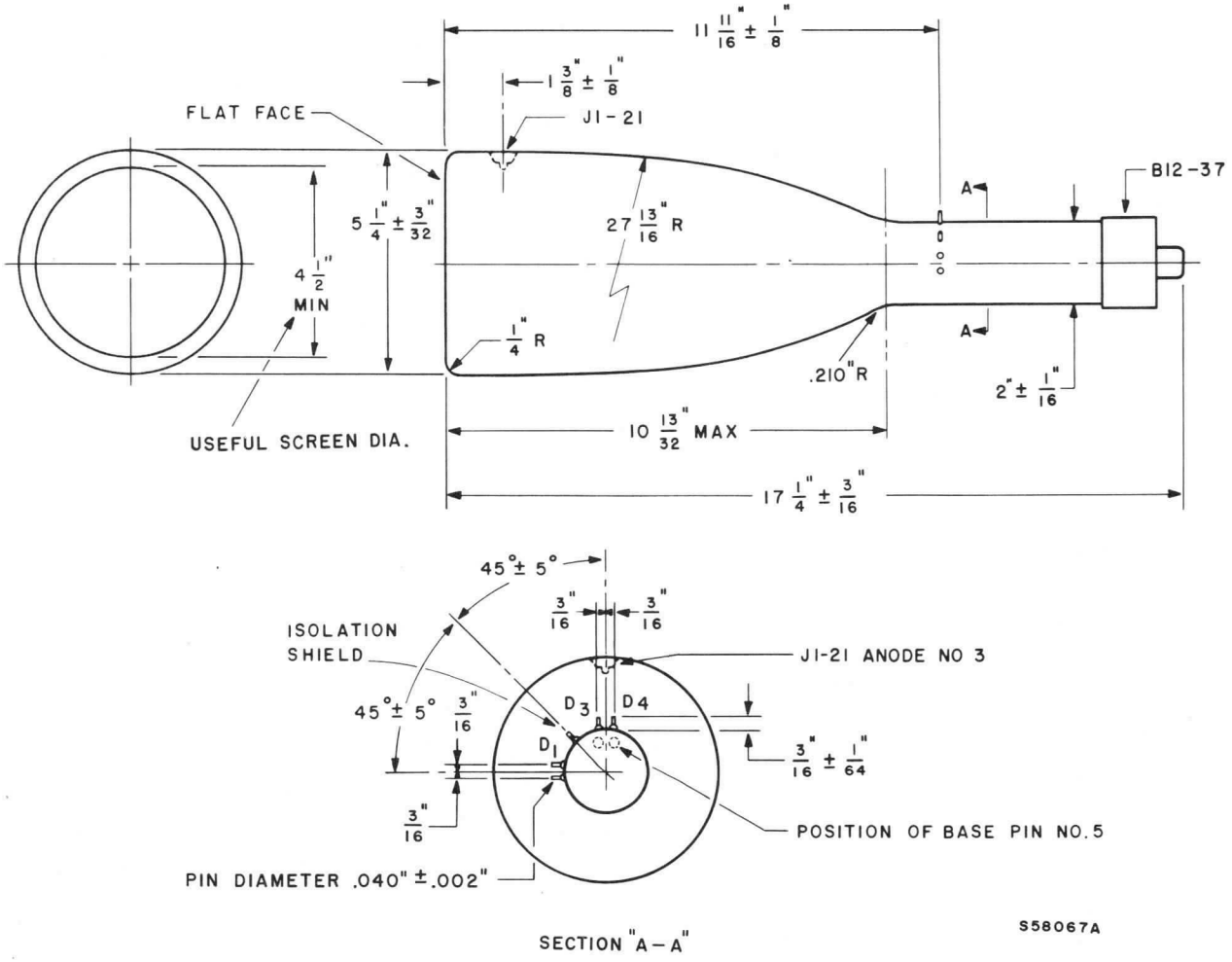

A Technical Publication of
SYLVANIA ELECTRIC
PRODUCTS INC.
EMPORIUM, PA.

CHARACTERISTICS

GENERAL DATA

Focusing Method	Electrostatic
Deflection Method	Electrostatic
Phosphors	Aluminized

Types*	Fluorescence	Phosphorescence	Persistence
5BHP1	Green	.....	Medium
5BHP2	Blue-Green	Green	Long
5BHP5	Blue	.....	Very Short
5BHP7	Blue-White	Yellow	Long
5BHP11	Blue	.....	Short
5BHP15	Blue-Green	.....	Extremely Short

Faceplate	Clear

**In addition to the types shown, the 5BHP- can be supplied with several other screen phosphors.*

ELECTRICAL DATA

Heater Voltage	6.3 Volts
Heater Current	$0.6 \pm 10\%$ Amperes
Direct Interelectrode Capacitances (approx.)	
Cathode to All Other Electrodes	4.6 $\mu\mu$f
Grid No. 1 to All Other Electrodes	6.4 $\mu\mu$f
D1 to D2	1.9 $\mu\mu$f
D3 to D4	1.5 $\mu\mu$f
D1 to All Other Electrodes Except D2	3.5 $\mu\mu$f
D2 to All Other Electrodes Except D1	3.5 $\mu\mu$f
D3 to All Other Electrodes Except D4	2.8 $\mu\mu$f
D4 to All Other Electrodes Except D3	2.8 $\mu\mu$f
Post Accelerator Helix Resistance	200 to 600 Megohms

MECHANICAL DATA

Minimum Useful Screen Diameter	$4\frac{1}{2}$ Inches
Anode No. 3 Contact (Recessed Small Cavity Cap)	J1-21
Bulb (Modified)	J42K
Base (Medium Shell Diheptal 12-Pin)	B12-37
Basing	14AG
Base Alignment	
D3-D4 trace aligns with Pin No. 1	± 10 Degrees
Positive Voltage on D1 deflects beam approx. toward Pin No. 4	
Positive Voltage on D3 deflects beam approx. toward Pin No. 1	
Angle Between traces D1-D2 and D3-D4	90 ± 1 Degrees

QUICK REFERENCE DATA

5" Direct Viewed
Flat Faceplate
Round Glass Type
Electrostatic Deflection
Electrostatic Focus
Helical Resistor Post
Deflection Acceleration
High Deflection Sensitivity
High Deflection Accuracy
Aluminized Screen

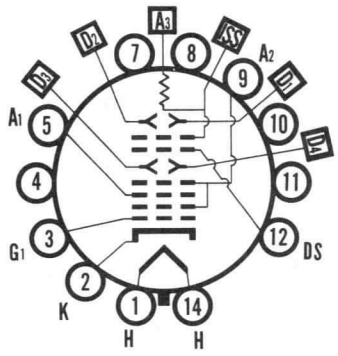

14-AG

SYLVANIA
ELECTRONIC TUBES
A Division of
Sylvania Electric Products, Inc.
PICTURE TUBE OPERATIONS
SENECA FALLS, NEW YORK

Prepared and Released By The
TECHNICAL PUBLICATIONS SECTION
EMPORIUM, PENNSYLVANIA

APRIL, 1959

MECHANICAL DATA (cont'd)

Bulb Contact Alignment
- J1-21 contact aligns with D1-D2 trace . . . . . ±10 Degrees
- J1-21 contact on same side as Pin No. 4

MAXIMUM RATINGS (Absolute Maximum Values)

Anode No. 2 Input	6	Watts
Anode No. 3 Voltage	13,200	Volts dc
Isolation Shield Voltage	2300	Volts dc
Deflection Plate Shield Voltage	2300	Volts dc
Anode No. 2 Voltage	2200	Volts dc
Ratio of Anode No. 3 Voltage to Anode No. 2 Voltage	6 : 1	Maximum
Anode No. 1 (Focus Electrode) Voltage	880	Volts dc
Grid No. 1 Voltage		
Negative Bias Value	220	Volts dc
Positive Bias Value	0	Volts dc
Positive Peak Plate	2	Volts
Peak Heater-Cathode Voltage		
Heater Negative with Respect to Cathode		
During Warm-up Period not to Exceed 15 Seconds	200	Volts
After Equipment Warm-up Period	140	Volts
Heater Positive with Respect to Cathode	140	Volts
Peak Voltage Between Anode No. 2 and Any Deflection Plate	550	Volts

TYPICAL OPERATING CONDITIONS

Anode No. 3 Voltage[1]	10,000	Volts dc
Isolation Shield Voltage[2]	1575 to 1700	Volts dc
Deflection Plate Shield Voltage[3]	1575 to 1700	Volts dc
Anode No. 2 Voltage[4]	1670	Volts dc
Anode No. 1 Voltage for Focus	180 to 590	Volts dc
Grid No. 1 Voltage Required for Cutoff[5]	−50 to −80	Volts dc
Deflection Factors[6]		
Deflection Plates 1-2	70 to 85	Volts dc/Inch
Deflection Plates 3-4	15 to 18.3	Volts dc/Inch
Pattern Distortion at 100% Useful Scan[7]	1.5%	Maximum
Undeflected Spot Position[8] (Deviation from Center)	5	MM. Max.
Useful Scan		
D1-D2	10	cm.
D3-D4	4	cm.

CIRCUIT VALUES

Grid No. 1 Circuit Resistance	1.5	Megohms Max.

NOTES:

1. *It is recommended that the Anode No. 3 voltage be no less than 6,000 volts for suitable light output.*

NOTES: (cont'd)

2. *The isolation shield and the lower end of the post accelerator helix are connected together within the tube. With the proper potential on this electrode combination, barrel and pin-cushion distortions are minimized.*

3. *Adjustment of deflection plate shield voltage provides improved linearity of D3-D4 deflection by controlling the edge effect of D3-D4 plate field. In many applications Pin No. 12 may be connected externally to the isolation shield.*

4. *Under the typical operating conditions listed the Anode No. 2 voltage is made variable from 1575 volts to 1850 volts to provide for astigmatism control. In order to maintain proper astigmatism adjustment as total cathode current is varied, it is recommended that the resistance in the Anode No. 2 circuit be limited to 12,500 ohms.*

5. *Visual extinction of undeflected focused spot.*

6. *If use is made of the full deflection capabilities of the tube, the deflection plates will intercept part of the electron beam near the edge of the scan; hence a low impedance deflection plate drive is desirable.*

7. *With a 4 x 10 cm rectangular raster centered on the face of the tube, the raster edges will not deviate from straight parallel lines by more than 1 mm total on the left and right edges, nor by more than 0.5 mm total at the top and bottom.*

8. *Connect deflection plates to Anode No. 2.*

WARNING:

X-ray radiation shielding may be necessary to protect against possible danger of personal injury from prolonged exposure at close range if this tube is operated at higher than the manufacturer's Maximum Rated Anode Voltage or 16,000 volts, whichever is less.

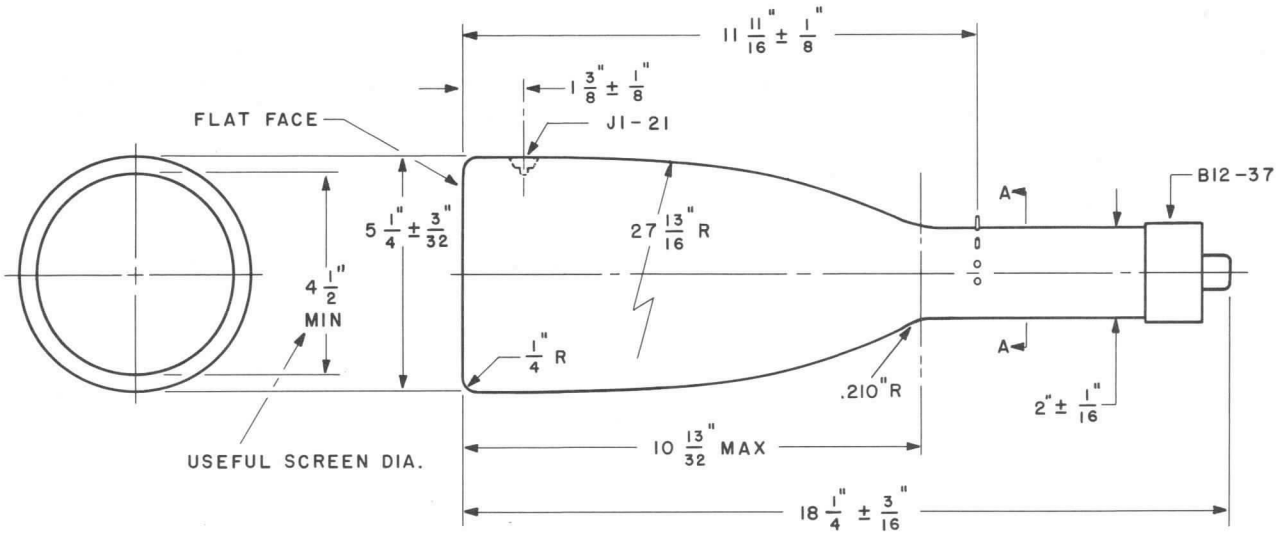

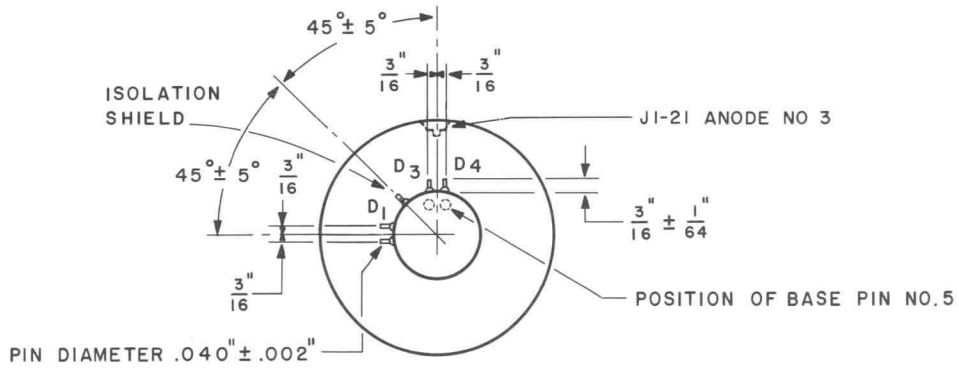

SECTION "A–A"

S 58067

SYLVANIA

engineering data service

SYLVANIA
5BHP1A
5BHP*

CHARACTERISTICS

GENERAL DATA

Focusing Method	Electrostatic
Deflection Method	Electrostatic
Phosphors	Aluminized

Types*	Fluorescence	Phosphorescence	Persistence
5BHP1	Green	—	Medium
5BHP2	Blue-Green	Green	Long
5BHP5	Blue	—	Very Short
5BHP7	Blue-White	Yellow	Long
5BHP11	Blue	—	Short
5BHP15	Blue-Green	—	Extremely Short

Faceplate . . . . . Clear

**In addition to the types shown, the 5BHPA- can be supplied with several other screen phosphors.*

ELECTRICAL DATA

Heater Voltage	6.3 Volts
Heater Current	0.6 ± 10 % Amperes
Direct Interelectrode Capacitances (Approx.)	
Cathode to All Other Electrodes	4.6 pf
Grid No. 1 to All Other Electrodes	6.4 pf
D1 to D2	1.9 pf
D3 to D4	1.5 pf
D1 to All Other Electrodes Except D2	3.5 pf
D2 to All Other Electrodes Except D1	3.5 pf
D3 to All Other Electrodes Except D4	2.8 pf
D4 to All Other Electrodes Except D3	2.8 pf
Post Accelerator Helix Resistance	200 to 600 Megohms

MECHANICAL DATA

Minimum Useful Screen Diameter	4 ½ Inches
Anode No. 3 Contact (Recessed Small Cavity Cap)	J1-21
Bulb (Modified)	J42K
Base (Medium Shell Diheptal 12-Pin)	B12-37
Basing	14AG
Base Alignment	
D3-D4 Trace Aligns with Pin No. 1	±10 Degrees
Positive Voltage on D1 Deflects Beam Approx. Toward Pin No. 4	
Positive Voltage on D3 Deflects Beam Approx. Toward Pin No. 1	
Angle Between Traces D1-D2 and D3-D4	90 ± 0.8 Degrees
Bulb Contact Alignment	
J1-21 Contact Aligns with D1-D2 Trace	±5 Degrees
J1-21 Contact on Same Side as Pin No. 4	

QUICK REFERENCE DATA

5″ Direct Viewed
Flat Faceplate
Round Glass Type
Electrostatic Deflection
Electrostatic Focus
Helical Resistor Post
Deflection Acceleration
High Deflection Sensitivity
High Deflection Accuracy
Aluminized Screen

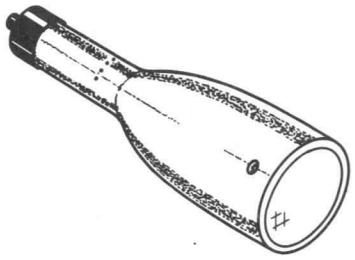

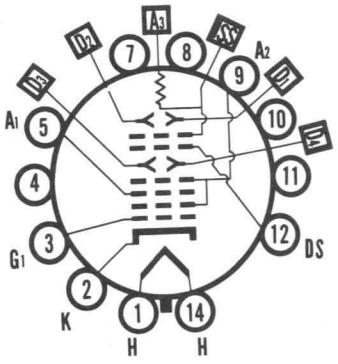

14-AG

SYLVANIA
ELECTRONIC TUBES

A Division of
Sylvania Electric Products Inc.

PICTURE TUBE
OPERATIONS

SENECA FALLS, NEW YORK

Prepared and Released By The
TECHNICAL PUBLICATIONS SECTION
EMPORIUM, PENNSYLVANIA

SEPTEMBER, 1963

File Under
SPECIAL AND GENERAL
PURPOSE CATHODE RAY TUBES

MAXIMUM RATINGS (Absolute Maximum Values)

Anode No. 2 Input	6 Watts	
Anode No. 3 Voltage	13,200 Volts	dc
Isolation Shield Voltage	2300 Volts	dc
Deflection Plate Shield Voltage	2300 Volts	dc
Anode No. 2 Voltage	2200 Volts	dc
Ratio of Anode No. 3 Voltage to Anode No. 2 Voltage	6 : 1 Maximum	
Anode No. 1 (Focus Electrode) Voltage	880 Volts	dc
Grid No. 1 Voltage		
Negative Bias Value	200 Volts	dc
Positive Bias Value	0 Volt	dc
Positive Peak Plate	2 Volts	
Peak Heater-Cathode Voltage		
Heater Negative with Respect to Cathode		
During Warm-up Period Not to Exceed 15 Seconds	200 Volts	
After Equipment Warm-up Period	180 Volts	
Heater Positive with Respect to Cathode	180 Volts	
Peak Voltage Between Anode No. 2 and Any Deflection Plate	550 Volts	

TYPICAL OPERATING CONDITIONS

Anode No. 3 Voltage[1]	10,000 Volts	dc
Isolation Shield Voltage[2]	1575 to 1700 Volts	dc
Deflection Plate Shield Voltage[3]	1575 to 1700 Volts	dc
Anode No. 2 Voltage[4]	1670 Volts	dc
Anode No. 1 Voltage for Focus	180 to 590 Volts	dc
Grid No. 1 Voltage Required for Cutoff[5]	−50 to −80 Volts	dc
Deflection Factors[6]		
Deflection Plates 1-2	70 to 85 Volts	dc/Inch
Deflection Plates 3-4	15 to 18.3 Volts	dc/Inch
Pattern Distortion at 100 % Useful Scan[7]	1.5 %	Max.
Undeflected Spot Position[8] (Deviation from Center)	5 mm.	Max.
Useful Scan		
D1-D2	10 cm.	
D3-D4	4 cm.	

CIRCUIT VALUES

Grid No. 1 Circuit Resistance	1.5 Megohms Max.

NOTES:

1. *It is recommended that the Anode No. 3 voltage be no less than 6,000 volts for suitable light output.*
2. *The isolation shield and the lower end of the post accelerator helix are connected together within the tube. With the proper potential on this electrode combination, barrel and pin-cushion distortions are minimized.*
3. *Adjustment of deflection plate shield voltage provides improved linearity of D3-D4 deflection by controlling the edge effect of D3-D4 plate field. In many applications Pin No. 12 may be connected externally to the isolation shield.*
4. *Under the typical operating conditions listed the Anode No. 2 voltage is made variable from 1575 volts to 1850 volts to provide for astigmatism control. In order to maintain proper astigmatism adjustment as total cathode current is varied, it is recommended that the resistance in the Anode No. 2 circuit be limited to 12,500 ohms.*
5. *Visual extinction of undeflected focused spot.*
6. *If use is made of the full deflection capabilities of the tube, the deflection plates will intercept part of the electron beam near the edge of the scan; hence a low impedance deflection plate drive is desirable.*
7. *With a 4 x 10 cm rectangular raster centered on the face of the tube, the raster edges will not deviate from straight parallel lines by more than 1 mm total on the left and right edges, nor by more than 0.5 mm total at the top and bottom.*
8. *Connect deflection plates to Anode No. 2.*

WARNING:

X-ray radiation shielding may be necessary to protect against possible danger of personal injury from prolonged exposure at close range if this tube is operated at higher than the manufacturer's Maximum Rated Anode Voltage or 16,000 volts, whichever is less.

OUTLINE

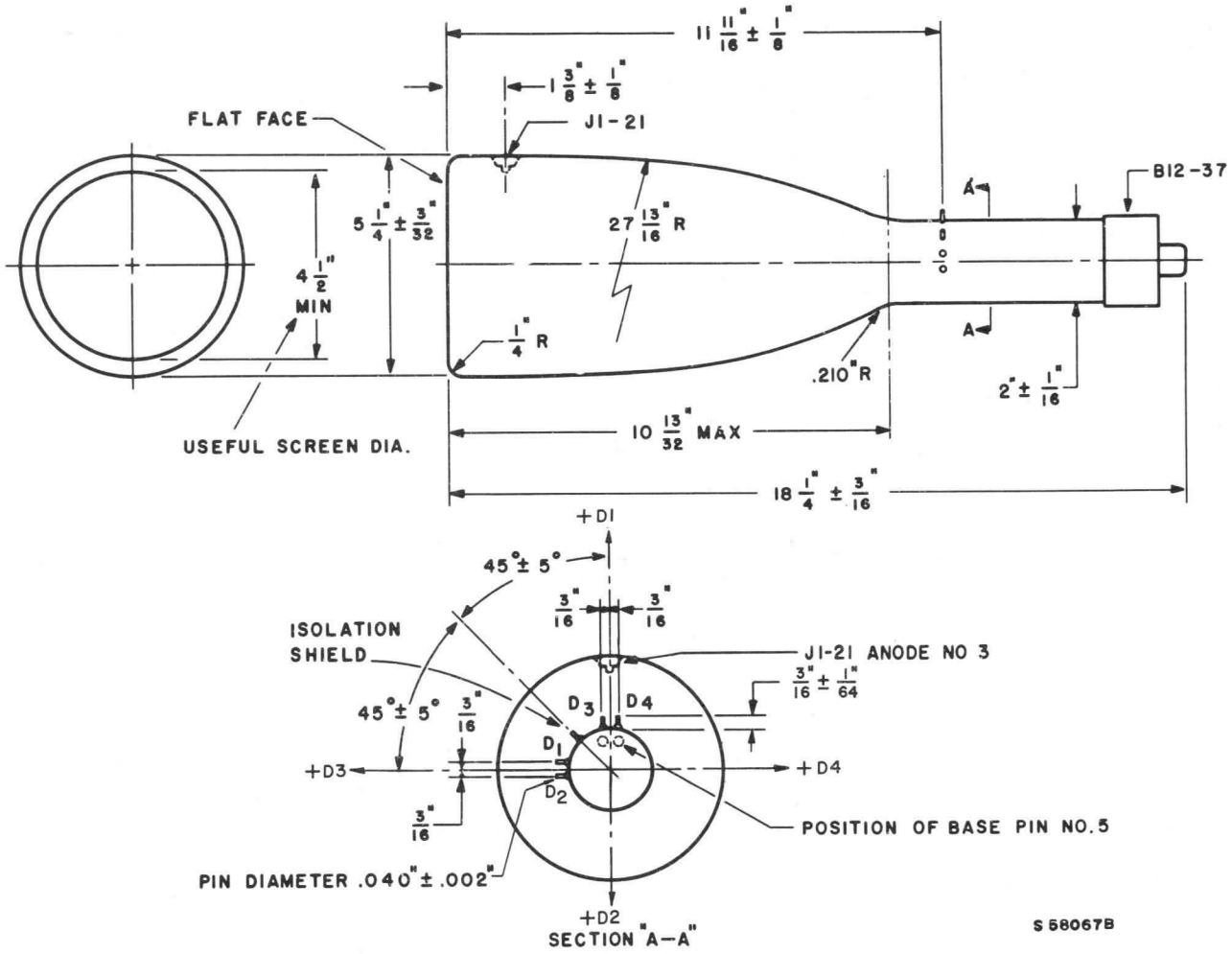

CHARACTERISTICS

GENERAL DATA

Focusing Method	Electrostatic
Deflecting Method	Magnetic
Deflection Angle (approx.)	53°
Phosphor	Aluminized P 16
Fluorescence	Violet and near Ultra-Violet
Persistence	Extremely Short
Faceplate	Clear

ELECTRICAL DATA

Heater Voltage	6.3 Volts
Heater Current	0.6 Amperes
Direct Interelectrode Capacitances (approx.)	
Cathode to All Other Electrodes	5 μμfd
Grid No. 1 to All Other Electrodes	6 μμfd
Ion Trap	No Ion Trap Required

MECHANICAL DATA

Minimum Useful Screen Diameter (Maximum Assured)	4¼ Inches
Overall Length	10⅝ ± ⅜ Inches
Bulb Contact (Recessed Small Ball Cap)	J1-22
Base (Small Shell Duo Decal 6 Pin)	B6-63
Basing	12M
Bulb	J39 ½L

RATINGS

MAXIMUM RATINGS (Absolute Maximum Values)

Anode Voltage	19,800 Volts	dc
Grid No. 4 Voltage (Focusing Electrode)	−550 to +1100 Volts	dc
Grid No. 2 Voltage	550 Volts	dc
Grid No. 1 Voltage		
Negative Bias Value	155 Volts	dc
Negative Peak Value	220 Volts	
Positive Bias Value	0 Volts	dc
Positive Peak Value	2 Volts	
Peak Heater Cathode Voltage		
Heater Negative with Respect to Cathode During Warm-up Period Not to Exceed 15 Seconds	450 Volts	
After Equipment Warm-up Period	200 Volts	
Heater Positive with Respect to Cathode	200 Volts	

TYPICAL OPERATING CONDITIONS

Anode Voltage	14,000 Volts	dc
Grid No. 4 Voltage for Focus	−50 to + 350 Volts	dc
Grid No. 2 Voltage	300 Volts	dc
Grid No. 1 Voltage for Cutoff[1]	−28 to −72 Volts	dc

CIRCUIT VALUES

Grid No. 1 Circuit Resistance	1.5 Megohms Max.

NOTE:

1. *Visual Extinction of Raster.*

QUICK REFERENCE DATA

Flying Spot Scanner Tube
5" Round Glass Type
Spherical Faceplace
Clear Faceplate
Magnetic Deflection
Electrostatic Focus
No Ion Trap
Aluminized Screen

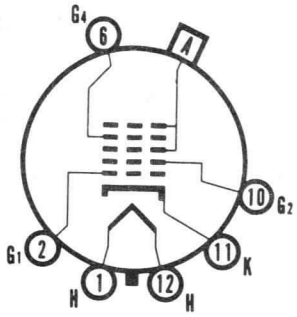

12-M

SYLVANIA ELECTRIC PRODUCTS INC.
TELEVISION PICTURE TUBE DIVISION
SENECA FALLS, NEW YORK

Prepared and Released By The TECHNICAL PUBLICATIONS SECTION EMPORIUM, PENNSYLVANIA

JUNE, 1957

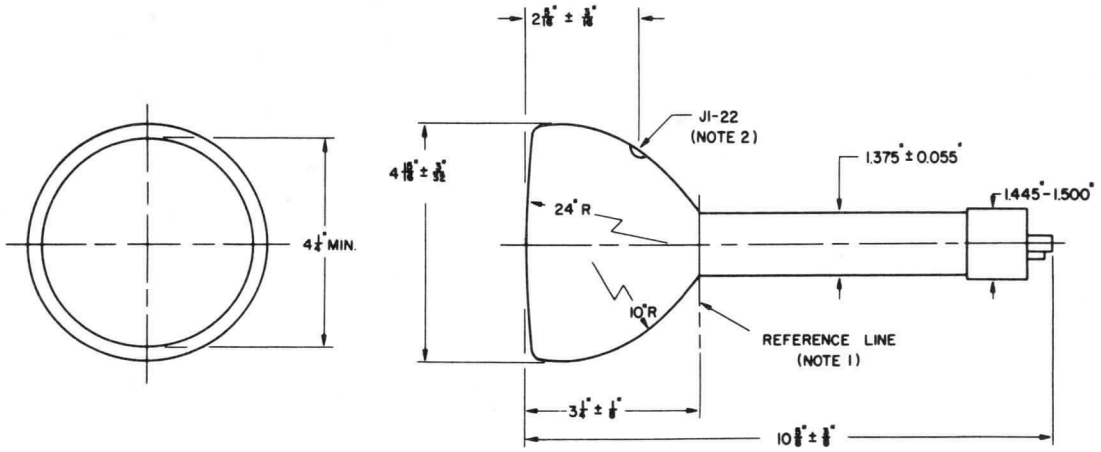

DIAGRAM NOTES:

1. *Reference line is determined by the plane C-C' of JETEC gauge 116 with gauge resting against bulb cone.*
2. *Anode contact (J1-22) aligns with Base Pin No. 6 ± 30°.*

WARNING:

X-ray radiation shielding may be necessary to protect against possible danger of personal injury from prolonged exposure at close range if this tube is operated at higher than the manufacturer's Maximum Rated Anode Voltage or 16,000 volts, whichever is less.

CHARACTERISTICS

GENERAL DATA

Focusing Method	Electrostatic
Deflecting Method	Electrostatic
Phosphor	P1
Fluorescence	Green
Persistence	Medium
Faceplate	Clear

**In addition to the type shown, the 5BP-A can be supplied with several other screen phosphors.*

ELECTRICAL DATA

Heater Voltage	6.3 Volts
Heater Current (approx.)	0.6 Ampere
Direct Interelectrode Capacitances (approx.)	
Grid No. 1 to All Other Electrodes	8.0 μμf
Between Deflecting Plates 1-2[1]	1.3 μμf
Between Deflecting Plates 3-4[1]	1.2 μμf
Deflecting Plate 1 to All Other Electrodes	9.5 μμf
Deflecting Plate 3 to All Other Electrodes	12 μμf
Deflecting Plate 1[2] to All Other Electrodes Except D2	8.0 μμf
Deflecting Plate 2[2] to all Other Electrodes Except D1	7.5 μμf
Deflecting Plate 3[2] to All Other Electrodes Except D4	10 μμf
Deflecting Plate 4[2] to All Other Electrodes Except D3	7.5 μμf

MECHANICAL DATA

Minimum Useful Screen Diameter	4½ Inches
Bulb	J42C or Equivalent
Base	Medium Shell Magnal 11 Pin
Basing	11N
Weight (approx.)	2 Pounds
Mounting Position	Any

RATINGS

MAXIMUM RATINGS (Absolute Maximum Values)

Anode No. 2 Voltage	2,200 Volts	dc
Anode No. 1 Voltage	1,100 Volts	dc
Grid Voltage		
Negative Bias Value	125 Volts	dc
Positive Bias Value	0 Volts	dc
Peak Voltage Between Anode No. 2 and Any Deflection Plate	550 Volts	

TYPICAL OPERATING CONDITIONS

Anode No. 2 Voltage[3]	2,000 Volts	dc
Anode No. 1 Voltage for Focus	315 to 562 Volts	dc
Grid Voltage Required for Cutoff[4]	−20 to −60 Volts	dc
Deflection Factors		
Deflecting Plates 1-2[5]	70 to 98 Volts	dc/Inch
Deflecting Plates 3-4[6]	63 to 89 Volts	dc/Inch

CIRCUIT VALUES

Grid No. 1 Circuit Resistance	1.5 Megohms Max.
Deflection Circuit Resistance	5.0 Megohms Max.

QUICK REFERENCE DATA

Oscilloscope Tube
5" Direct Viewed
Round Glass Type
Electrostatic Deflection
Electrostatic Focus

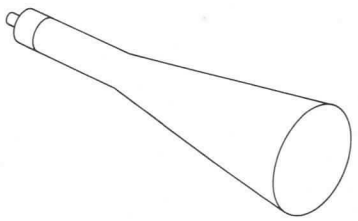

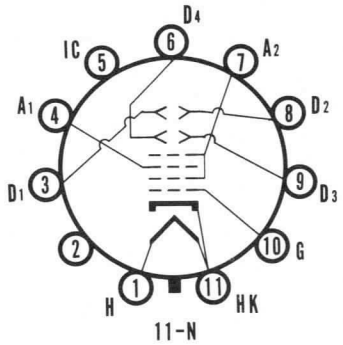

11-N

SYLVANIA ELECTRIC PRODUCTS INC.
TELEVISION PICTURE TUBE DIVISION
SENECA FALLS, NEW YORK

Prepared and Released By The TECHNICAL PUBLICATIONS SECTION EMPORIUM, PENNSYLVANIA

SEPTEMBER, 1958

NOTES:

1. *Deflecting Plate 1 is Pin No. 3*
   Deflecting Plate 2 is Pin No. 8
   Deflecting Plate 3 is Pin No. 9
   Deflecting Plate 4 is Pin No. 6
2. *Trace produced by plates D3-D4 aligns with plane through tube axis and Pin No. 1, within 10°. Angle between D1-D2 trace and D3-D4 trace is 90° ± 3°. With D3 positive with respect to D4, the spot is deflected toward Pin No. 1. With D1 Positive with respect to D2, the spot is deflected toward Pin No. 4.*
3. *Brilliance and definition decrease with decreasing Anode No. 2 Voltage. In general, Anode No. 2 Voltage should not be less than 1500 volts.*
4. *Visual extinction of undeflected focused spot.*
5. *Deflecting Plates 1-2 are nearer the screen.*
6. *Deflecting Plates 3-4 are nearer the base.*

5BP1

Sylvania Type 5BP1A supersedes Type 5BP1.

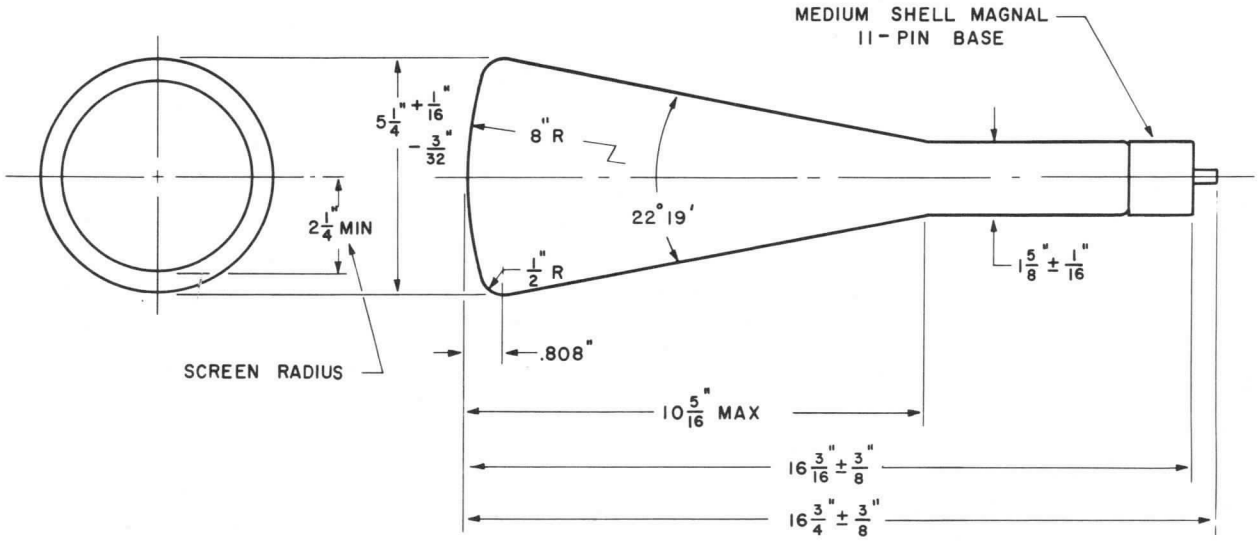

S58006

SYLVANIA

engineering data service

SYLVANIA
5BRP4
5BRP-*

CHARACTERISTICS

GENERAL DATA

Focusing Method	Electrostatic
Deflecting Method	Magnetic
Deflection Angle (Approx.)	70 Degrees

Types*	Fluorescence	Phosphorescence	Persistence
5BRP4	White	White	Medium
5BRP7	Blue-White	Yellow	Long
5BRP16	Purple	- - -	Very Short
5BRP19	Orange	Orange	Long
5BRP25	Orange	Orange	Long

Screen	Aluminized
Faceplate	Clear, Spherical

* In addition to the types shown, the 5BRP- can be supplied with several other screen phosphors.

ELECTRICAL DATA

Heater Voltage	6.3 Volts
Heater Current	0.3 ± 10% Ampere
Direct Interelectrode Capacitances (Approx.)	
Cathode to All Other Electrodes	3 $\mu\mu$f
Grid No. 1 to All Other Electrodes	6.5 $\mu\mu$f

MECHANICAL DATA

Minimum Useful Screen Diameter	4¼ Inches
Bulb	J39½R
Bulb Contact (Recessed Small Ball Cap)	J1-22
Base[1]	E9-37
Basing	9HT
Weight	1 Pound

RATINGS

MAXIMUM RATINGS (Absolute Maximum Values)

Anode Voltage	10,000 Volts	dc
Grid No. 4 Voltage (Focusing Electrode)	−550 to +1100 Volts	dc
Grid No. 2 Voltage	770 Volts	dc
Grid No. 1 Voltage		
Negative Bias Value	180 Volts	dc
Positive Bias Value	0 Volts	dc
Positive Peak Value	0 Volts	
Peak Heater-Cathode Voltage		
Heater Negative with Respect to Cathode	180 Volts	
Heater Positive with Respect to Cathode	180 Volts	

TYPICAL OPERATING CONDITIONS[5]

Anode Voltage	8000 Volts	dc
Grid No. 4 Voltage for Focus[2]	−50 to +350 Volts	dc
Grid No. 2 Voltage	300 Volts	dc
Grid No. 1 Voltage Required for Spot Cutoff	−15 to −45 Volts	dc
Line Width "A"[3]	.014 Inch	Max.
Spot Position (Undeflected)[4]	¼ Inch	

CIRCUIT VALUES:

Grid No. 1 Circuit Resistance	1.5 Megohms Max.

QUICK REFERENCE DATA

Radar Indicator (5BRP7)
Monitor Tube (5BRP4)
5" Direct Viewed
Round Glass Type
Spherical Faceplate
Aluminized Screen
Magnetic Deflection
Electrostatic Focus
⅞ Inch Neck Diameter
6.3 Volt — 300 Ma Heater
Short Length
Light Weight

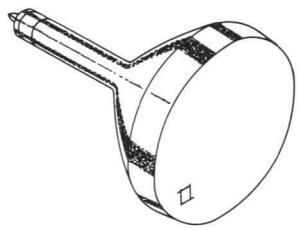

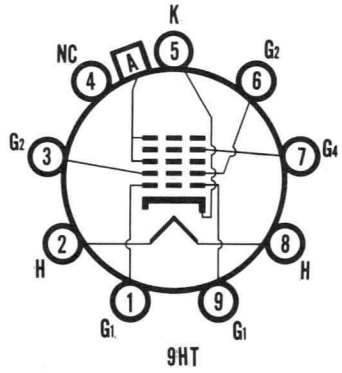

SYLVANIA
ELECTRONIC TUBES
A Division of
Sylvania Electric Products Inc.
PICTURE TUBE OPERATIONS
SENECA FALLS, NEW YORK

Prepared and Released By The
TECHNICAL PUBLICATIONS SECTION
EMPORIUM, PENNSYLVANIA

MAY, 1961

File Under
SPECIAL AND GENERAL PURPOSE
CATHODE RAY TUBES

NOTES:

1. *A socket with a center opening to clear the tubulation must be used. Care should be exercised to avoid damage to the tubulation.*
2. *With Grid No. 1 Voltage adjusted to give an anode current of 100 μa.*
3. *Measured per Mil-E-1 specifications at an anode current of 100 μa.*
4. *With the tube shielded, the center of the undeflected, focused spot will fall within a circle of ¼ inch radius concentric with the center of the tube face.*
5. *The P16, P19 and P25 screens can be permanently damaged if current density is permitted to rise too high. To prevent burning, minimum beam current densities should be employed.*

WARNING:

X-ray radiation shielding may be necessary to protect against possible danger of personal injury from prolonged exposure at close range if this tube is operated at higher than the manufacturer's Maximum Rated Anode Voltage or 16,000 volts, whichever is less.

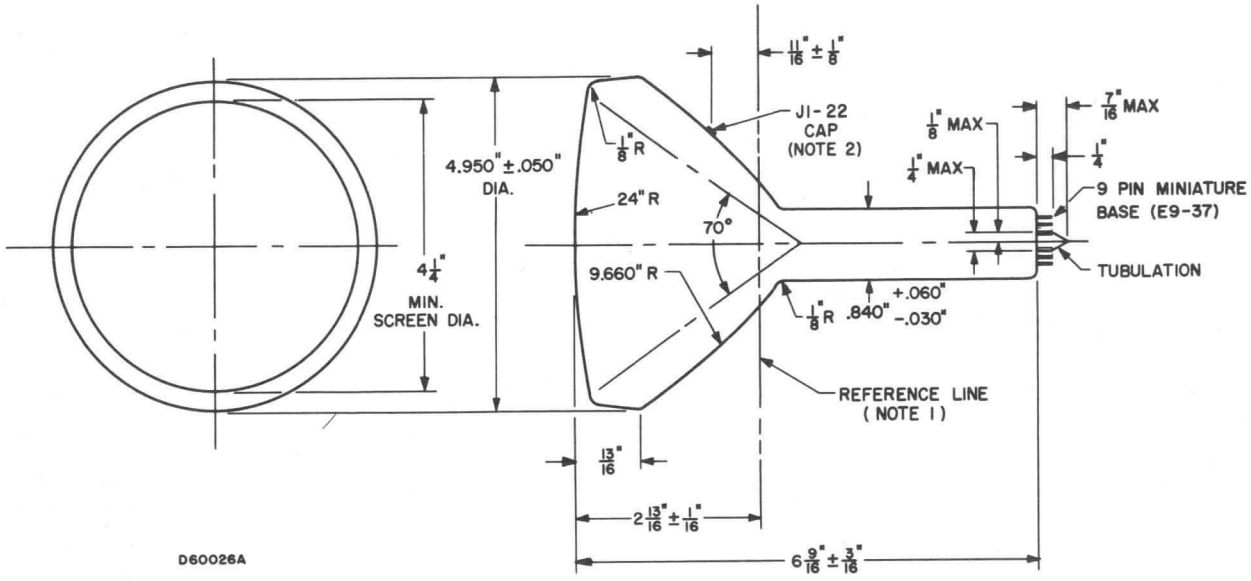

DIAGRAM NOTES:

1. *Reference line is determined by the point where leading edge of JEDEC G-123 reference line gauge will stop.*
2. *Bulb Contact (J1-22 Cap) has radial alignment about tube axis, with mid-plane between base Pins No. 1 and No. 9, ± 10 degrees.*

SYLVANIA

engineering data service

SYLVANIA
5BTP1
5BTP*

CHARACTERISTICS

GENERAL DATA

Focusing Method	Electrostatic
Deflection Method	Electrostatic

Types*	Fluorescence	Phosphorescence	Persistence
5BTP1	Green	———	Medium
5BTP2	Blue-Green	Green	Long
5BTP7	Blue-White	Yellow	Long
5BTP11	Blue	———	Short

Faceplate . . . . . Clear, Flat

*In addition to the types shown, the 5BTP- can be supplied with several other screen phosphors.

ELECTRICAL DATA

Heater Voltage	6.3 Volts
Heater Current	0.6 ± 10% Amperes
Direct Interelectrode Capacitances (approx.)	
Cathode to All Other Electrodes	5.0 μμf
Grid No. 1 to All Other Electrodes	8.0 μμf
D1 to D2	2.0 μμf
D3 to D4	3.0 μμf
D1 to All Other Electrodes	10.5 μμf
D2 to All Other Electrodes	8.5 μμf
D3 to All Other Electrodes	8.5 μμf
D4 to All Other Electrodes	9.5 μμf

MECHANICAL DATA

Minimum Useful Screen Diameter	4½ Inches
Bulb	LEA-407 or Equivalent
Bulb Contact (Recessed Small Ball Cap)	J1-22
Base (Small Shell Duodecal 12-Pin)	B12-43
Basing	See Diagram
Bulb Contact Alignment	
J1-22 Contact Aligns with D1-D2 Trace.	± 10 Degrees
J1-22 Contact on Same Side as Pin No. 4	
Base Alignment	
D1-D2 Trace Aligns with Pin No. 4 and Tube Axis	0 ± 10 Degrees
Positive Voltage on D1 Deflects Beam approximately Toward Pin No. 4	
Positive Voltage on D3 Deflects Beam approximately Toward Pin No. 1	
Angle Between D3-D4 and D1-D2 Traces	90 ± 1 Degrees
Deflection Plates	
D1-D2 are Closer to Screen	
D3-D4 are Closer to Base	
Weight (approx.)	2 Pounds

RATINGS

MAXIMUM RATINGS (Absolute Maximum Values)

Anode No. 2 Input	6 Wats
Anode No. 3 Voltage	4400 Volts dc
Anode No. 2 Voltage	2700 Volts dc
Ratio Anode No. 3 to Anode No. 2 Voltage	2.1 Max.
Anode No. 1 (Focusing Electrode)	1100 Volts dc

QUICK REFERENCE DATA

Oscilloscope Tube
5" Direct Viewed
Round Glass Type
Flat, Clear Faceplate
Short Length
Electrostatic Deflection
Electrostatic Focus
Post Deflection Accelerator
High Deflection Sensitivity

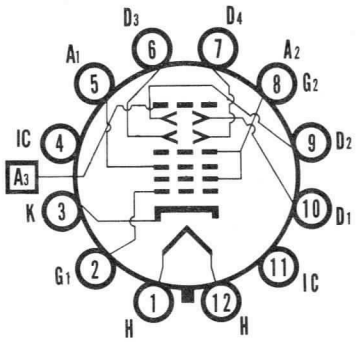

5BTP1

SYLVANIA
ELECTRONIC TUBES
A Division of
Sylvania Electric Products Inc.
PICTURE TUBE OPERATIONS
SENECA FALLS, NEW YORK

Prepared and Released By The
TECHNICAL PUBLICATIONS SECTION
EMPORIUM, PENNSYLVANIA

APRIL, 1960

File Under
SPECIAL PURPOSE
CATHODE RAY TUBES

MAXIMUM RATINGS (Absolute Maximum Values) (cont'd)

Grid No. 1 Voltage	
Negative Bias Value	140 Volts dc
Positive Bias Value	0 Volts dc
Positive Peak Value	2 Volts
Peak Heater-Cathode Voltage	
Heater Negative with Respect to Cathode	
During Warm-up Period Not to Exceed 15 seconds	450 Volts
After Equipment Warm-up Period	140 Volts
Heater Positive with Respect to Cathode	140 Volts
Peak Voltage Between Anode No. 2 and Any	
Deflection Plate	600 Volts

TYPICAL OPERATING CONDITIONS

Anode No. 3 Voltage	3000 Volts dc
Anode No. 2 Voltage	1500 Volts dc
Anode No. 1 Voltage for Focus	570 to 772 Volts dc
Grid No. 1 Voltage Required for Cutoff[1]	–40 to –94 Volts dc
Deflection Factors	
Deflection Plates D1-D2	81 to 109 Volts dc/Inch
Deflecting Plates D3-D4	43 to 58 Volts dc/Inch
Spot Position[2]	Within a 15 mm Square
Useful Scan	
D1-D2	Full Screen Coverage
D3-D4	4 Inches — Centered with Respect to the tube face

CIRCUIT VALUES

Grid No. 1 Circuit Resistance	1.5 Megohms
Deflection Circuit Resistance[3]	1.5 Megohms

NOTES:

1. *Visual extinction of the undeflected focused spot.*
2. *With the tube shielded and with all deflection plates connected to Anode No. 2. Limit square centered on tube face with the sides parallel to deflection axes.*
3. *It is recommended that the deflecting electrode circuit resistances be approximately equal.*

OUTLINE

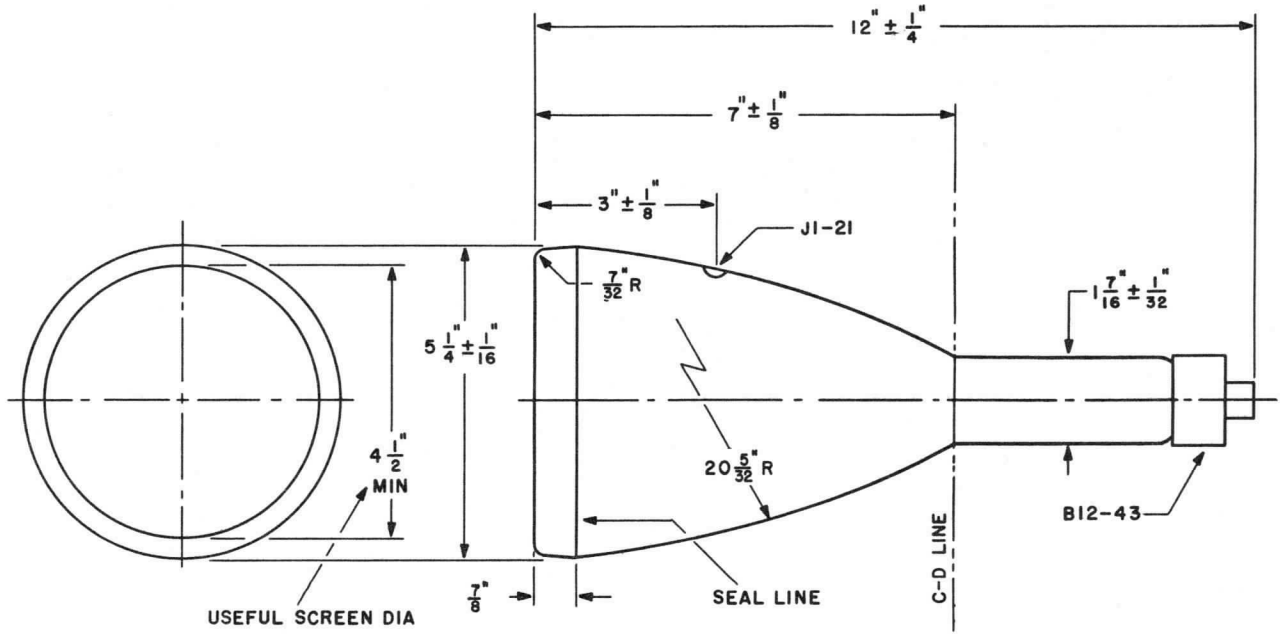

D59019

DESCRIPTION

The Sylvania Types 5CEP11 and 5CEP16 are 5-inch diameter Cathode Ray Tubes designed for high resolution photographic recording and high resolution flying spot scanning applications respectively. They have electrostatic focus, magnetic deflection, and are capable of producing a line width of 0.0015 inch. The tubes have flat, neutral gray, non-browning optical glass faceplates for optimum photographic quality. Both types have aluminized phosphors to increase display brightness. An integral encapsulated high voltage connector is utilized to minimize corona at high altitude.

CHARACTERISTICS

GENERAL DATA

Focusing Method	Electrostatic	
Deflection Method	Magnetic	
Deflection Angle (Approx.)	42 Degrees	
	5CEP16	5CEP11
Phosphor*	P16	Fine Grain P11, Aluminized
Fluorescence	Violet and Near Ultra-Violet	Blue
Persistence	Extremely Short	Short
Faceplate	Gray, Non-Browning Optical Glass	

*In addition to the types shown, the 5CEP can be supplied with several other screen phosphors.

ELECTRICAL DATA

Heater Voltage	6.3 Volts
Heater Current	0.6 ± 10 % Ampere
Direct Interelectrode Capacitances (Approx.)	
Grid No. 1 to All Other Electrodes	9 pf
Grid No. 2 to All Other Electrodes	7 pf
Cathode to All Other Electrodes	7 pf

MECHANICAL DATA

Minimum Useful Screen Diameter	4¼ Inches
Overall Length	13 ± ½ Inches
Bulb Diameter	5¼ ± 1/16 Inches
Anode Terminal	16″ HV Cable, Corona Protected
Base	B6-63
Basing	12Q

RATINGS

MAXIMUM RATINGS (Absolute Maximum Values)

Anode Voltage	22,000 Volts dc
Grid No. 3 (Focus) Voltage	5000 Volts dc
Grid No. 2 Voltage	600 Volts dc
Grid No. 1 Voltage	
Negative Bias Value	180 Volts dc
Positive Bias Value	0 Volt
Positive Peak Value	0 Volt
Peak Heater Cathode Voltage	
Heater Negative with Respect to Cathode During Warm-up Period Not to Exceed 15 Seconds	450 Volts
After Equipment Warm-up Period	180 Volts
Heater Positive with Respect to Cathode	180 Volts

QUICK REFERENCE DATA

High Resolution Tube
.0015″ Line Width
5-Inch, Flat, Optical Glass Faceplate
Clear Non-Browning Faceplate
Extremely Fine Grain Screen
Aluminized Screen
Magnetic Deflection
Electrostatic Focus
No Ion Trap

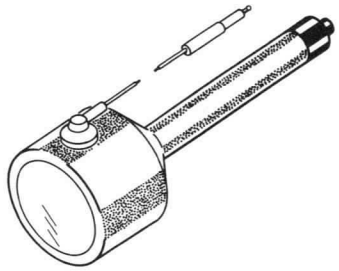

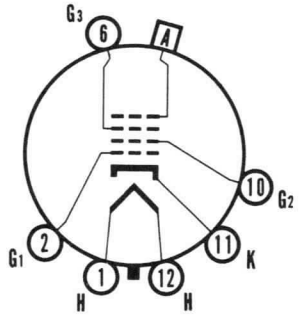

12-Q

SYLVANIA ELECTRIC PRODUCTS INC.

Electronic Components Group
ELECTRONIC TUBE DIVISION
SENECA FALLS, NEW YORK

A Technical Publication

JUNE, 1964

File Under
SPECIAL AND GENERAL PURPOSE CATHODE RAY TUBES

TYPICAL OPERATING CONDITIONS

Anode Voltage	10,000	20,000 Volts
Grid No. 3 (Focus) Voltage[1]	2070-2370	4140-4740 Volts
Grid No. 2 Voltage	300	300 Volts
Grid No. 1 Cutoff Voltage[2]	−40 to −65	−40 to −65 Volts
Line Width[3]	0.0015	0.0015 Inch

CIRCUIT VALUES

Grid No. 1 Circuit Resistance	1.5 Megohms Max.

NOTES:

1. *The Grid No. 3 focus supply should be capable of 250 μa average current. Due to the extreme fineness of the line, it is recommended that focus modulation (dynamic focus) be used.*
2. *Visual extinction of undeflected focused spot.*
3. *Line width measured at 5 μa by the shrinking raster method.*

WARNING:

X-ray radiation shielding may be necessary to protect against possible danger of personal injury from prolonged exposure at close range if this tube is operated at higher than the manufacturer's Maximum Rated Anode Voltage of 16,000 volts, whichever is less.

OUTLINE

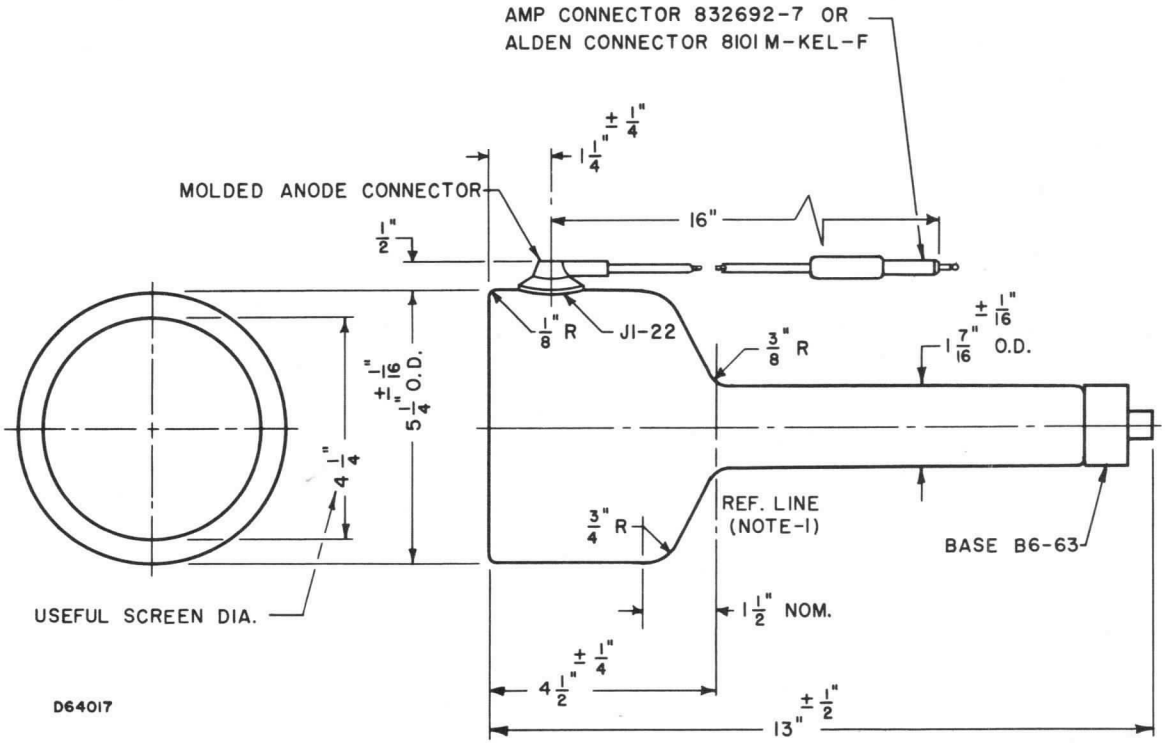

DIAGRAM NOTES:

1. *Yoke Reference Line is the plane where a 1.500" + 0.003", −0.000" I.D. Ring Gage will stop.*
2. *Molded Anode Connector alignment with vacant pin Position No. 3 has angular tolerance of ±10° measured about the tube axis.*

SYLVANIA

engineering data service

SYLVANIA
5CP1A
5CP7A, 5CP11A
5CP12

CHARACTERISTICS

GENERAL DATA

Focusing Method	Electrostatic
Deflecting Method	Electrostatic
Phosphor	P1
Fluorescence	Green
Persistence	Medium
Faceplate	Clear

ELECTRICAL DATA

Heater Voltage	6.3 Volts
Heater Current (approx.)	0.6 Ampere
Direct Interelectrode Capacitances (approx.)	
Cathode to All Other Electrodes	9 $\mu\mu$f
Grid No. 1 to All Other Electrodes	8 $\mu\mu$f
Between Deflecting Plates 1-2[1]	2 $\mu\mu$f
Between Deflecting Plates 3-4[1]	2 $\mu\mu$f
Deflecting Plate 1[1] to All Other Electrodes	9 $\mu\mu$f
Deflecting Plate 2[1] to All Other Electrodes	9 $\mu\mu$f
Deflecting Plate 3[1] to All Other Electrodes	7 $\mu\mu$f
Deflecting Plate 4[1] to All Other Electrodes	8 $\mu\mu$f

MECHANICAL DATA

Minimum Useful Screen Dimension (Diameter)	4½ Inches
Bulb Contact (Recessed Small Ball Cap)	J1-22
Base (Medium Shell Diheptal 12-Pin)	B12-37
Basing	14J

RATINGS

MAXIMUM RATINGS (Design Center Values)

Anode No. 3 Voltage	4,000 Volts dc
Anode No. 2 Voltage	2,000 Volts dc
Anode No. 1 Voltage	1,000 Volts dc
Grid No. 1 Voltage	
Negative Bias Value	200 Volts dc
Positive Bias Value	0 Volts dc
Positive Peak Value	2 Volts
Peak Heater Cathode Voltage	
Heater Negative with Respect to Cathode	125 Volts
Heater Positive with Respect to Cathode	125 Volts
Peak Voltage Between Anode No. 2 And Any Deflecting Plate	500 Volts

RECOMMENDED OPERATING CONDITIONS

Anode No. 3 Voltage	4,000 Volts dc
Anode No. 2 Voltage	2,000 Volts dc
Anode No. 1 Voltage	375 to 690 Volts dc
Grid No. 1 Voltage Required for Cutoff[2]	−30 to −90 Volts dc
Deflection Factor	
Deflecting Plates 1-2[3]	92 Volts dc/Inch
Deflecting Plates 3-4[4]	78 Volts dc/Inch

CIRCUIT VALUES

Grid No. 1 Circuit Resistance	1.5 Megohms Max.
Deflection Circuit Resistance	5.0 Megohms Max.

QUICK REFERENCE DATA

Special Purpose Tube
5" Direct Viewed
Round Glass Type
Electrostatic Deflection
Electrostatic Focus
Post Deflection Accelerator

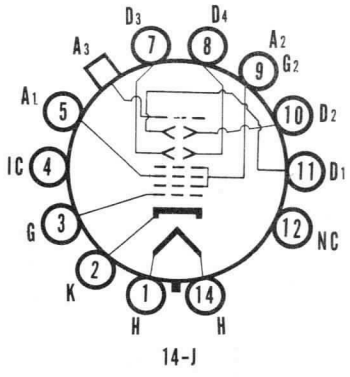

14-J

SYLVANIA ELECTRIC PRODUCTS INC.

TELEVISION PICTURE TUBE DIVISION
SENECA FALLS, NEW YORK

Prepared and Released By The TECHNICAL PUBLICATIONS SECTION EMPORIUM, PENNSYLVANIA

JULY, 1954

SYLVANIA

5CP1A

5CP7A, 5CP11A
5CP12

NOTES:

1. *Deflecting Plate 1 is Pin No. 11*
   Deflecting Plate 2 is Pin No. 10
   Deflecting Plate 3 is Pin No. 7
   Deflecting Plate 4 is Pin No. 8
2. *Visual extinction of undeflected focused spot.*
3. *Deflecting Plates 1-2 are nearer the screen.*
4. *Deflecting Plates 3-4 are nearer the base.*
5. *The plane through the tube axis and each of the following items may vary from the trace produced by deflecting plates 1-2 by the following angular tolerances measured about the tube axis: Pin 5 10 degrees; cap (on same side of tube as Pin 5) 10 degrees.*

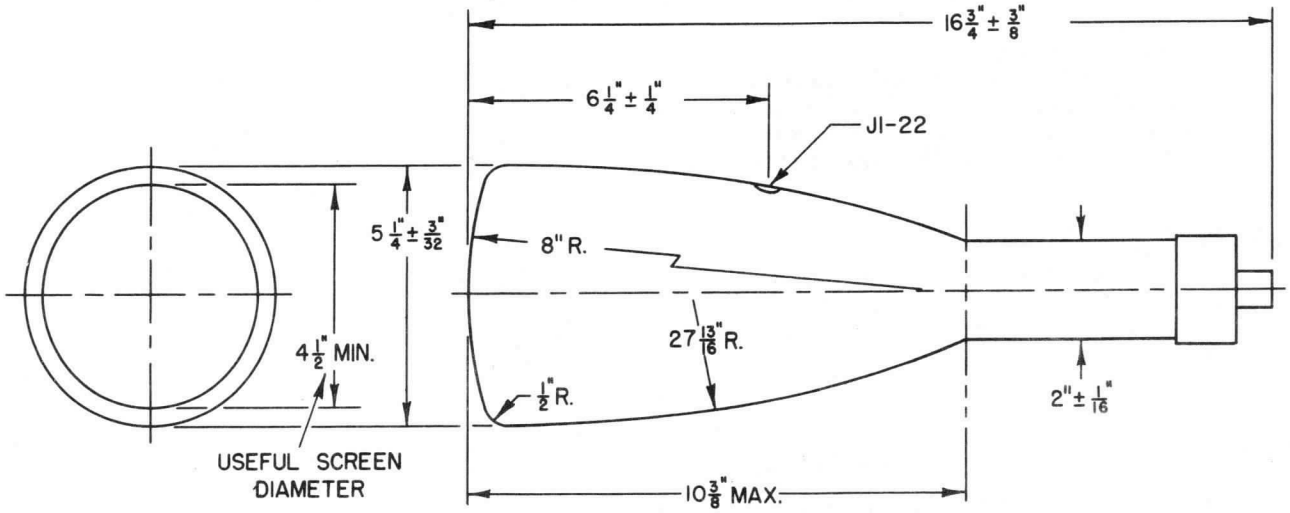

S53005

5CP7A

The Sylvania Type 5CP7A is identical to the Type 5CP1A except it has a blue-white fluorescence, yellow phosphorescence, long persistence phosphor.

5CP11A

The Sylvania Type 5CP11A is identical to the Type 5CP1A except it has blue phosphor and a short persistence.

5CP12

The Sylvania Type 5CP12 is identical to the Type 5CP1A except it has an orange phosphor and a medium long persistence.

SYLVANIA

engineering data service

SYLVANIA
5CVP1
5CVP7
5CVP19

DESCRIPTION

Sylvania 5CVP- is a compact, rectangular, direct view cathode-ray tube designed primarily for use in airborne equipment. It features a high quality, nearly flat pressed faceplate, a high resolution electrostatic focus gun, 54 degree magnetic deflection, and neck diameter of .840 inches. Its encapsulated leads permit operation at high altitude, and it will withstand a wide range of temperatures.

CHARACTERISTICS

GENERAL DATA

Focusing Method . . . . . Electrostatic
Deflection Method . . . . . Magnetic
Deflection Angles (Approx.)
- Horizontal . . . . . 52 Degrees
- Vertical . . . . . 27 Degrees
- Diagonal . . . . . 54 Degrees

Phosphor

Types*	Fluorescence	Phosphorescence	Persistence
P1	Green	———	Medium
P7	Blue - White	Yellow	Long
P19	Orange	Orange	Very Long

Faceplate . . . . . Spherical, Clear, Pressed Glass

* In addition to the types shown, the 5CVP- can be supplied with several other screen phosphors.

ELECTRICAL DATA

Heater Voltage . . . . . 6.3 Volts
Heater Current . . . . . 0.3 ± 10% Amperes
Direct Interelectrode Capacitances (approx.)
- Grid No. 1 to All . . . . . 12.0 $\mu\mu$f
- Cathode to All . . . . . 9.5 $\mu\mu$f

MECHANICAL DATA

Minimum Useful Screen Dimensions (Maximum Assured)
- Horizontal . . . . . 4 Inches
- Vertical . . . . . 2 Inches
- Diagonal . . . . . 4 1/8 Inches
- Area . . . . . 7.4 Sq. Inches

Bulb . . . . . C39 Exp. 3 or equivalent
Bulb Contact . . . . . Special Molded Lead
Base . . . . . Special Encapsulated Base with Color Coded Leads
Weight (Approx.) . . . . . 1 1/4 Pounds

RATINGS

MAXIMUM RATINGS (Absolute Maximum Values)

Anode Voltage . . . . . 4500 Volts dc
Anode Input . . . . . 6 Watts
Grid No. 4 Voltage (Focusing Electrode) . . . . -500 to +1100 Volts dc
Grid No. 2 Voltage . . . . . 550 Volts dc
Grid No. 1 Voltage
- Negative Bias Value . . . . . 165 Volts dc
- Positive Bias Value . . . . . 0 Volts dc
- Positive Peak Value . . . . . 2 Volts

Peak Heater-Cathode Voltage
- Heater Negative with Respect to Cathode . . . 180 Volts
- Heater Positive with Respect to Cathode . . . . 180 Volts

Altitude . . . . . 70,000 Feet
Operating Temperature Range . . . . . -65 to +85 °C

QUICK REFERENCE DATA

Indicator Tube
2¾ x 4¾ Direct Viewed
Rectangular Glass Type
Magnetic Deflection
Electrostatic Focus
Encapsulated Leads
.840 O.D. Neck Diameter

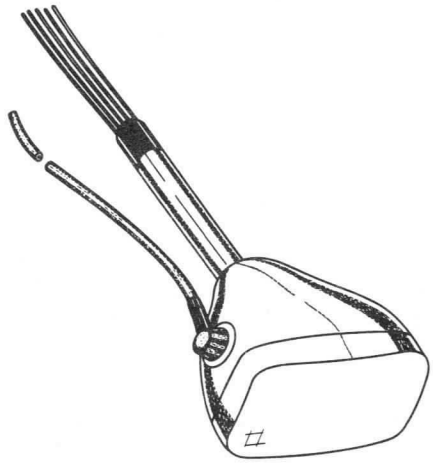

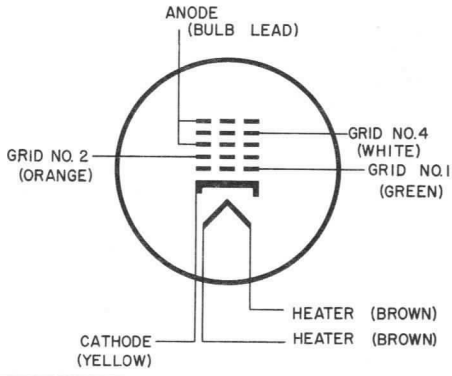

SYLVANIA
ELECTRONIC TUBES
A Division of
Sylvania Electric Products Inc.

PICTURE TUBE OPERATIONS
SENECA FALLS, NEW YORK

Prepared and Released By The
TECHNICAL PUBLICATIONS SECTION
EMPORIUM, PENNSYLVANIA

APRIL, 1960

File Under
SPECIAL AND GENERAL PURPOSE
CATHODE RAY TUBES

TYPICAL OPERATING CONDITIONS

Anode Voltage	4000 Volts dc
Grid No. 4 Voltage (Focusing Electrode)[1]	0 to +120 Volts dc
Grid No. 2 Voltage	300 Volts dc
Grid No. 1 Voltage[2]	−15 to −45 Volts dc
Modulation[3]	15 Volts dc Max.
Line Width[3]	.006 Inches Max.

NOTES:

1. *The horizontal deflection current is a triangular wave form of ¼ cps at an amplitude sufficient to scan 3¾ inches. The vertical deflection current is a saw tooth of 1/120 cps at an amplitude sufficient to scan 1⅜ inches. The control grid voltage is adjusted to produce a spot barely visible to dim lighting conditions. The beam is periodically unblanked to zero bias for a period of 500 μsecs at a repetition rate of 200 - 1000 pps. The focus electrode voltage for best focus under these pulsed conditions shall be as specified.*
2. *Visual extinction of undeflected focused spot.*
3. *Measured at a beam current of 10 μa, and in accordance with MIL-E-1 specifications.*

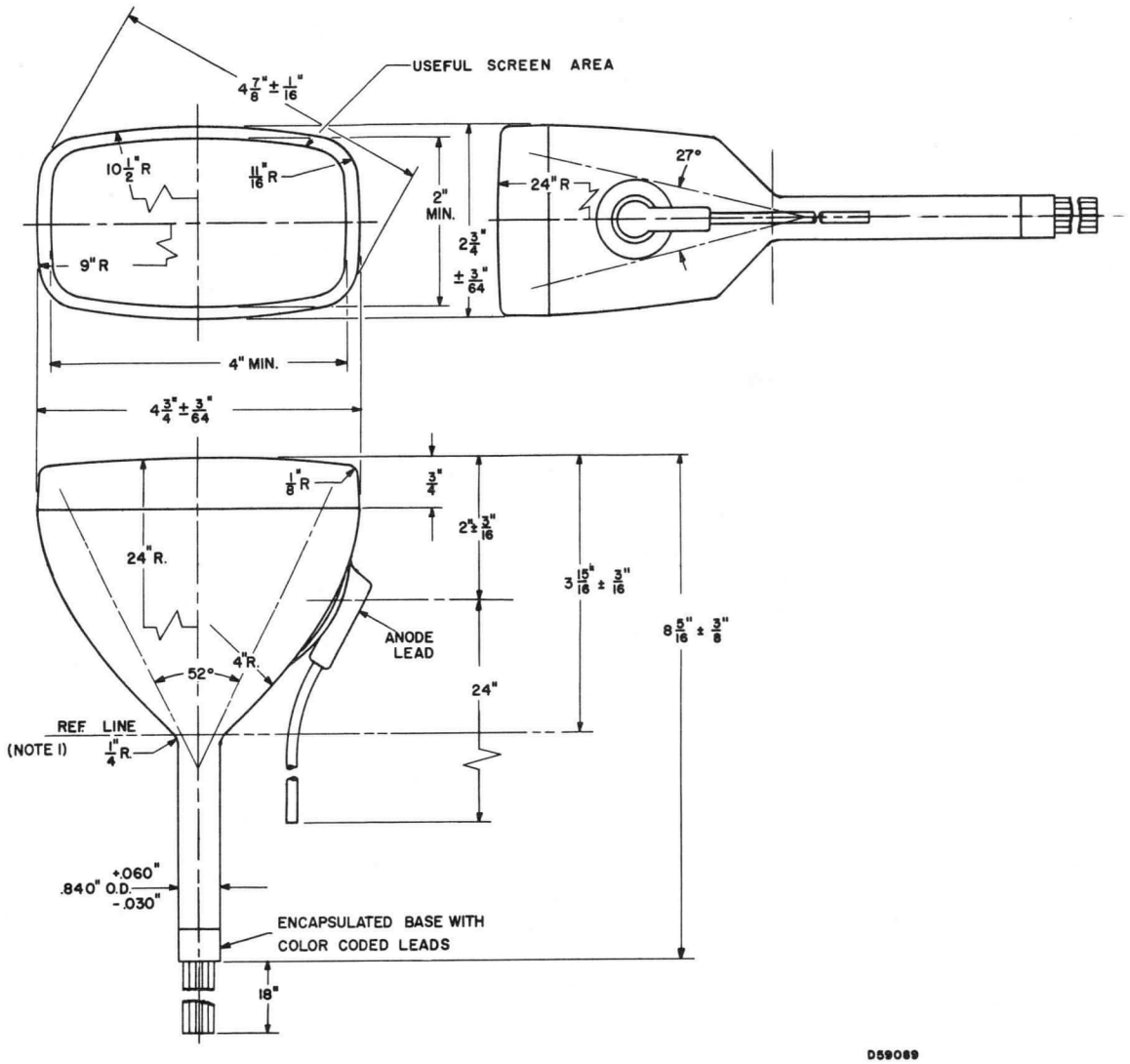

OUTLINE NOTE:

1. *Reference line is determined by the plane where a gauge 1.000 $^{+.003}_{-.000}$ I.D. and 2" long will seat against the bulb body.*

CHARACTERISTICS

GENERAL DATA

Focusing Method	Electrostatic
Deflection Method	Electrostatic

Phosphor*	P1	P2	P7	P11
Fluorescence	Green	Green	Blue-White	Blue
Phosphorescence	—	Green	Yellow	—
Persistence	Medium	Long	Long	Short

Faceplate	Clear

*In addition, the 5DEP — can be supplied with several other screen phospors.

ELECTRICAL DATA

Heater Voltage	6.3 Volts
Heater Current	0.6 ± 10% Ampere
Direct Interelectrode Capacitances (Approx.)	
Grid to All Other Electrodes	6.0 μμf
Between Deflecting Plates 1-2	3.5 μμf
Between Deflecting Plates 3-4	3.0 μμf
Deflecting Plate 1[1] to All Other Electrodes	10.0 μμf
Deflecting Plate 2[1] to All Other Electrodes	6.5 μμf
Deflecting Plate 3[1] to All Other Electrodes	7.5 μμf
Deflecting Plate 4[1] to All Other Electrodes	5.0 μμf

MECHANICAL DATA

Minimum Useful Screen Diameter	4½ Inches
Bulb	J42J
Base (Small Shell Duodecal 12-Pin)	B12-43
Basing	12E
Weight (Approx.)	1½ Pounds

MAXIMUM RATINGS (Absolute Maximum Values)

Anode No. 2 Voltage	2750 Volts	dc
Anode No. 1 Voltage	1100 Volts	dc
Grid Voltage		
Negative Bias Value	220 Volts	dc
Positive Bias Value	0 Volts	dc
Positive Peak Value	2 Volts	
Peak Heater-Cathode Voltage		
Heater Negative with Respect to Cathode	140 Volts	
Heater Positive with Respect to Cathode	140 Volts	
Peak Voltage Between Anode No. 2 and Any Deflection Plate	550 Volts	

TYPICAL OPERATING CONDITIONS

Anode No. 2 Voltage [2]	2000 Volts	dc
Anode No. 1 Voltage for Focus	340 to 640 Volts	dc
Maximum Grid Voltage Required for Cutoff[3]	−90 Volts	dc
Deflection Factor[4,5]		
Deflecting Plates 1-2[6]	48 to 64 Volts	dc/Inch
Deflecting Plates 3-4[7]	27 to 37 Volts	dc/Inch
Spot Position (Undeflected)[8]	10 mm	Max.

CIRCUIT VALUES

Grid Circuit Resistance	1.5 Megohms Max.
Deflection Circuit Resistance	5.0 Megohms Max.

QUICK REFERENCE DATA

Oscilloscope Tube
5" Direct Viewed
Round Glass Type
Electrostatic Deflection
Electrostatic Focus
High Deflection Sensitivity

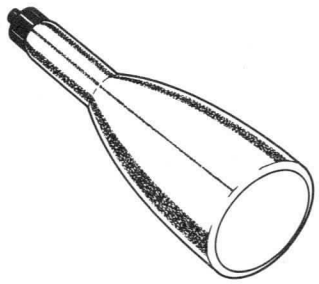

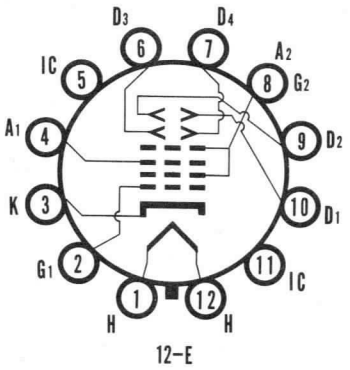

SYLVANIA
ELECTRONIC TUBES
A Division of
Sylvania Electric Products Inc.
PICTURE TUBE OPERATIONS
SENECA FALLS, NEW YORK

Prepared and Released By The TECHNICAL PUBLICATIONS SECTION EMPORIUM, PENNSYLVANIA

OCTOBER, 1961

File Under
SPECIAL AND GENERAL PURPOSE CATHODE RAY TUBES

NOTES:

1. *Positive voltage on D1 (Pin No. 10) will move spot approximately in direction of Pin No. 4. Positive voltage on D3 (Pin No. 6) will move spot approximately in direction of Pin No. 1.*
2. *Brilliance and definition decrease with decreasing Anode No. 2 Voltages. In general, Anode No. 2 Voltage should not be less than 1000 volts for the Type 5DEP1 and not less than 1500 volts for the Types 5DEP2, 5DEP7, and 5DEP11.*
3. *Visual extinction of undeflected focused spot.*
4. *Angle between trace produced by Plates D1-D2 and the plane through the tube axis and Pin No. 4 does not exceed 10°.*
5. *Angle between D1-D2 trace and D3-D4 trace is 90° ± 1°.*
6. *Deflecting Plates 1-2 are nearer the screen.*
7. *Deflecting Plates 3-4 are nearer the base.*
8. *With the tube shielded and with all deflection plates connected to A2, the spot shall fall within a square, 10 mm on a side, centered with respect to the face and with the sides parallel to the deflection axes.*

OUTLINE

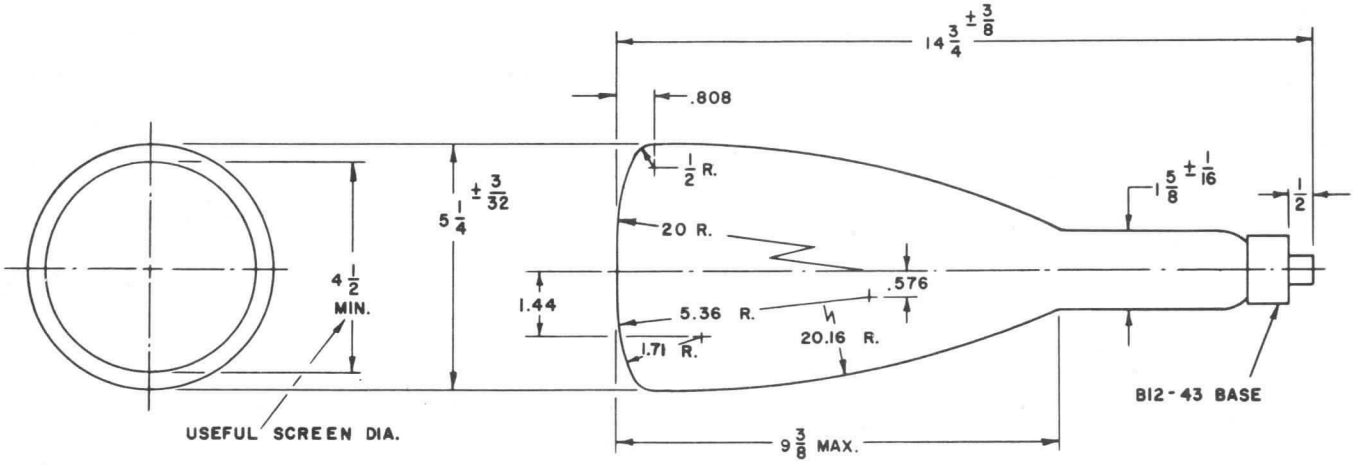

DIAGRAM NOTE:

1. *Dimensions are in inches.*

CHARACTERISTICS

GENERAL DATA

Focusing Method	Magnetic
Deflecting Method	Magnetic
Deflection Angles (Approx.)	53 Degrees

Types*	Fluorescence	Persistence
5DKP4	White	Medium Short
5DKP11	Blue	Medium Short
5DKP15	Green	Visible: Short U.V.: Very Short
5DKP16	Bluish Purple (U.V.)	Very Short
5DKP24	Green	Short

*In addition to the types shown, the 5DKP- can be supplied with several other screen phosphors. All screens are aluminized.

ELECTRICAL DATA

Heater Voltage	6.3 Volts
Heater Current	0.6 ± 10 % Ampere
Direct Interelectrode Capacitances (Approx.)	
Cathode to All Other Electrodes	5 μμf
Grid No. 1 to All Other Electrodes	8 μμf

MECHANICAL DATA

Minimum Useful Screen Diameter	4¼ Inches
Nominal Overall Length	11⅛ Inches
Bulb Contact (Recessed Small Ball Cap)	J1-22
Base (Medium Shell Octal 5-pin or 8-pin)	B8-11, B8-65 or B5-80
Basing	5AN
Bulb	J39½L

RATINGS

MAXIMUM RATINGS (Absolute Maximum Values)

Anode Voltage[1]	8800 Volts	dc
Grid No. 2 Voltage	770 Volts	dc
Grid No. 1 Voltage		
Negative Bias Value	180 Volts	dc
Positive Bias Value	0 Volts	dc
Positive Peak Value	2 Volts	
Peak Heater-Cathode Voltage		
Heater Negative with Respect to Cathode	180 Volts	
Heater Positive with Respect to Cathode	180 Volts	

TYPICAL OPERATING CONDITIONS

Anode Voltage[2]	8000 Volts	dc
Grid No. 2 Voltage	250 Volts	dc
Grid No. 1 Voltage[3]	−30 to −75 Volts	dc
Focusing Coil Current[4]	136 ± 15 % Ma	dc
Spot Position (Undeflected)[5]	9 mm	
Line Width A[6]	.16 mm	Max.

CIRCUIT VALUES

Grid No. 1 Circuit Resistance	1.5 Megohms Max.

QUICK REFERENCE DATA

5DKP4 —Monitor Tube
5DKP11 —Photo Recorder
5DKP15, 5DKP16, 5DKP24 —Flying Spot Scanners
5″ Round Glass Type
Aluminized Screen
Magnetic Deflection
Magnetic Focus
High Resolution

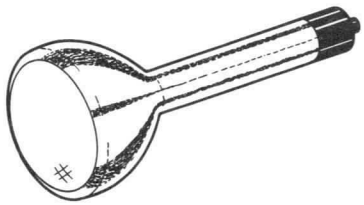

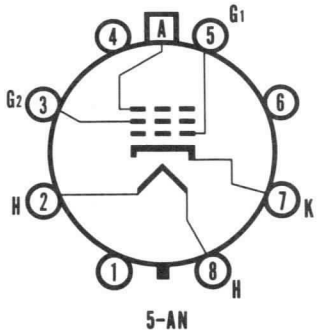

SYLVANIA
ELECTRONIC TUBES
A Division of
Sylvania Electric Products Inc.
PICTURE TUBE OPERATIONS
SENECA FALLS, NEW YORK

Prepared and Released By The
TECHNICAL PUBLICATIONS SECTION
EMPORIUM, PENNSYLVANIA
MARCH, 1962

File Under
SPECIAL AND GENERAL
PURPOSE CATHODE RAY TUBES

NOTES:

1. *The product of the anode voltage and the average anode current should be limited to 6 watts.*
2. *Brilliance and definition decrease with decreasing anode voltage. In general, the anode voltage should not be less than 6000 volts.*
3. *Visual extinction of undeflected focused spot.*
4. *For JEDEC focus coil No. 106 or equivalent, with the Grid No. 1 voltage adjusted to produce an accelerator current of 200 μamps and with distance from reference line to center of air gap equal to $2\frac{3}{4}$ inches.*
5. *The center of the undeflected unfocused spot will fall within a circle of 9 mm radius centered on the tube face.*
6. *Measured in accordance with MIL-E-1 specification, at anode current of 200 μa.*

OUTLINE

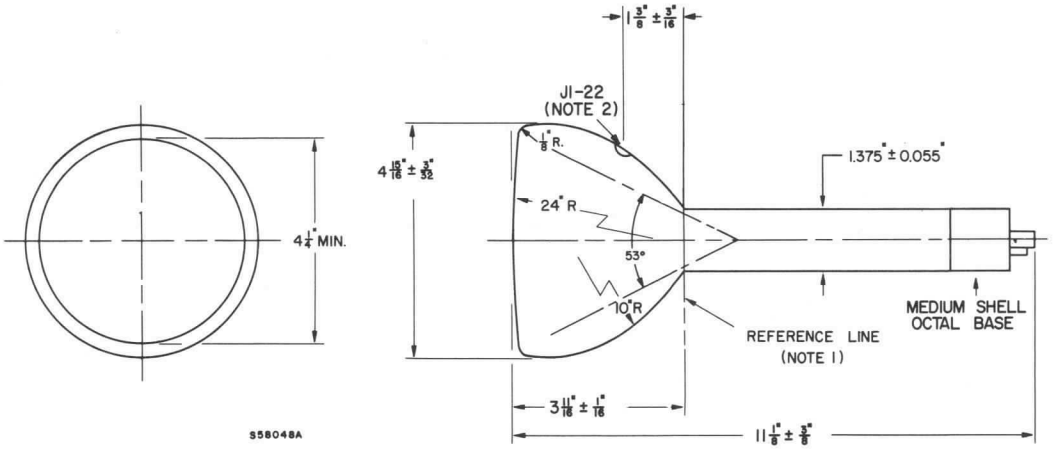

DIAGRAM NOTES:

1. *Reference line is determined by position where JEDEC Gauge No. 124 (a cylinder 1.430″ + .003″ − .000″ ID and 2″ long) will seat against cone of bulb.*
2. *The plane through the tube axis and Pin No. 5 may vary from the plane through the tube axis and anode terminal by an angular tolerance (measured about the tube axis) of 10°. Anode terminal is on same side of tube as Pin No. 5.*

SYLVANIA

engineering data service

SYLVANIA

5DLP4

CHARACTERISTICS

GENERAL DATA

Focusing Method	Electrostatic
Deflection Method	Magnetic
Deflection Angle (Approx.)	53 Degrees
Phosphor	Aluminized P4
Fluorescence	White
Persistence	Medium Short
Faceplate	Spherical, Clear

ELECTRICAL DATA

Heater Voltage	6.3 Volts	
Heater Current	0.60 ± 5 % Ampere	
Heater Warm-up Time[1]	11 Seconds	
Direct Interelectrode Capacitances (Approx.)		
Cathode to All Other Electrodes	5 μμf	
Grid No. 1 to All Other Electrodes	6 μμf	
External Conductive Coating to Anode[2]	400 μμf	Max.
	200 μμf	Min.

MECHANICAL DATA

Minimum Useful Screen Diameter (Maximum Assured)	4 ¼ Inches
Area	16 Sq. Inches
Neck Length	5⅝ Nom. Inches
Overall Length	8⅞ + ⅛ − 7/16 Inches
Bulb	J39 ½P
Bulb Contact (Recessed Small Cavity Cap)	J1-21
Base	B7-183 or B7-208
Basing	8LV
Weight (Approx.)	1 ¼ Pounds

RATINGS

MAXIMUM RATINGS (Design Maximum Values) Grid Drive Service

Maximum Anode Voltage	12,000 Volts	dc
Minimum Anode Voltage	8000 Volts	dc
Grid No. 4 Voltage (Focusing Electrode)	−550 to +1100 Volts	dc
Grid No. 2 Voltage	550 Volts	dc
Grid No. 1 Voltage		
Negative Bias Value	155 Volts	dc
Negative Peak Value	220 Volts	
Positive Bias Value	0 Volts	dc
Positive Peak Value	2 Volts	
Peak Heater-Cathode Voltage		
Heater Negative with Respect to Cathode During Warm-up Period not to Exceed 15 Seconds	450 Volts	
After Equipment Warm-up Period	200 Volts	
Heater Positive with Respect to Cathode	200 Volts	

TYPICAL OPERATING CONDITIONS, Grid Drive Service

Anode Voltage	10,000 Volts	dc
Grid No. 4 Voltage for Focus	0 to +400 Volts	dc
Grid No. 2 Voltage	300 Volts	dc
Grid No. 1 Voltage Required for Cutoff[3]	−35 to −72 Volts	dc

CIRCUIT VALUES

Grid No. 1 Circuit Resistance	1.5 Megohms	Max.

QUICK REFERENCE DATA

Monitor Tube
5″ Direct Viewed
Round Glass Type
Clear Glass Face
Aluminized Screen
Electrostatic Focus
53° Magnetic Deflection
No Ion Trap
External Conductive Coating

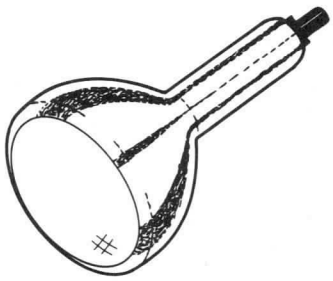

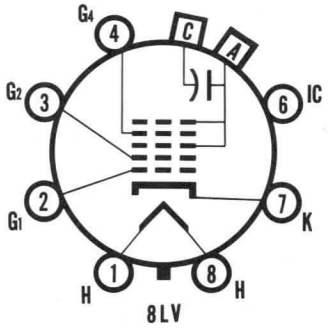

SYLVANIA
ELECTRONIC TUBES

A Division of
Sylvania Electric Products Inc.

PICTURE TUBE
OPERATIONS

SENECA FALLS, NEW YORK

Prepared and Released By The
TECHNICAL PUBLICATIONS SECTION
EMPORIUM, PENNSYLVANIA

JUNE, 1962

File Under
SPECIAL AND GENERAL
PURPOSE CATHODE RAY TUBES

NOTES:

1. *Heater warm-up time is defined as the time required for the voltage across the heater to reach 80 % of the rated heater voltage after applying four (4) times rated heater voltage to a circuit consisting of the tube heater in series with a resistance equal to three (3) times the rated heater voltage divided by the rated heater current.*
2. *External conductive coating must be grounded.*
3. *Visual extinction of focused raster. Extinction of stationary focused spot will require that these values be about 5 volts more negative.*

WARNING:

X-ray radiation shielding may be necessary to protect against possible danger of personal injury from prolonged exposure at close range if this tube is operated at higher than the manufacturer's Maximum Rated Anode Voltage or 16,000 volts, whichever is less.

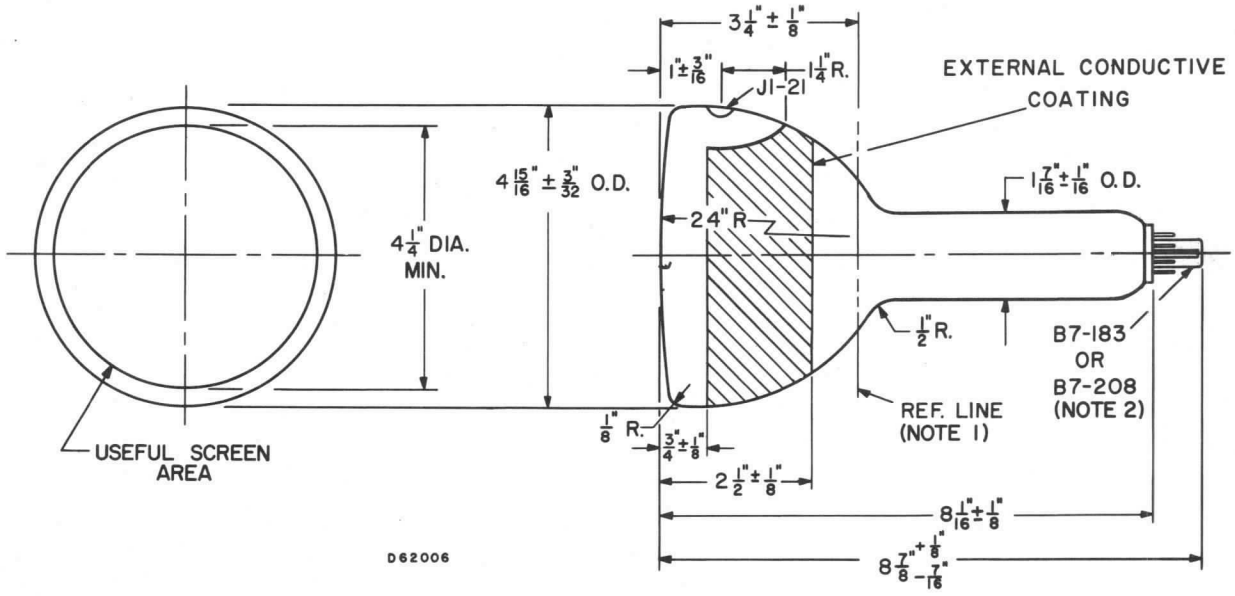

DIAGRAM NOTES:

1. *Reference line is determined by plane C-C¹ JEDEC Gauge No. 116 when gauge is seated against cone of bulb.*
2. *Pin No. 4 aligns with anode contact (J1-21) within 30°.*

CHARACTERISTICS

GENERAL DATA

Focusing Method	Magnetic
Deflecting Method	Magnetic
Deflection Angles (Approx.)	53 Degrees

Types*	5FP4A	5FP7A	5FP11A	5FP14A
Fluorescence	White	Blue-White	Blue	Blue
Phosphorescence	White	Yellow	—	Orange
Persistence	Medium	Long	Short	Medium-Long

Faceplate . . . . . Clear

*In addition to the types shown, the 5FP-A can be supplied with several other screen phosphors.

ELECTRICAL DATA

Heater Voltage	6.3 Volts
Heater Current (Approx.)	0.6 ± 10% Ampere
Direct Interelectrode Capacitances (Approx.)	
Cathode to All Other Electrodes	5 μμf
Grid No. 1 to All Other Electrodes	8 μμf

MECHANICAL DATA

Minimum Useful Screen Diameter	4¼ Inches
Nominal Overall Length	11⅛ Inches
Bulb Contact (Recessed Small Ball Cap)	J1-22
Base (Medium Shell Octal 5-Pin or 8-Pin)	B8-11,B8-65 or B5-80
Basing	5AN
Bulb	J39½ L

RATINGS

MAXIMUM RATINGS (Absolute Maximum Values)

	5FP4A	5FP7A 5FP11A 5FP14A	
Anode Voltage[1]	8800	8800 Volts	dc
Grid No 2 Voltage	450	770 Volts	dc
Grid No. 1 Voltage			
Negative Bias Value	140	200 Volts	dc
Positive Bias Value	0	0 Volts	dc
Positive Peak Value	2	2 Volts	
Peak Heater-Cathode Voltage			
Heater Negative with Respect to Cathode	165	200 Volts	
Heater Positive with Respect to Cathode	165	200 Volts	

TYPICAL OPERATING CONDITIONS

Anode Voltage[2]	6,000	4,000 Volts	dc
Grid No. 2 Voltage	250	250 Volts	dc
Grid No. 1 Voltage[3]	−25 to −70	−25 to −70 Volts	dc
Focusing Coil Current (Approx.)[4,5]	120 ± 15%	96 ± 15% Ma	dc
Spot Position (Undeflected)[6]		9 mm	
Line Width A[7]		.010 in.	Max

CIRCUIT VALUES

Grid No. 1 Circuit Resistance . . . . . 1.5 Megohms Max.

QUICK REFERENCE DATA

5FP4A: Monitor Tube
5FP7A, 5FP14A; Radar Indicator Tubes
5FP11A: Photo Recorder Tube
5" Direct Viewed
Round Glass Type
Magnetic Deflection
Magnetic Focus

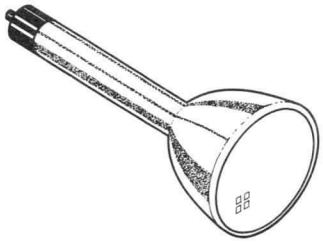

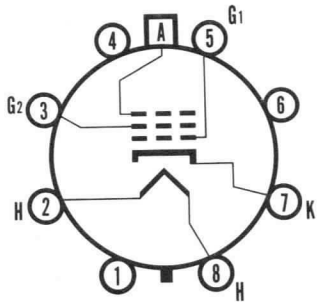

5-AN

SYLVANIA
ELECTRONIC TUBES
A Division of
Sylvania Electric Products Inc.
PICTURE TUBE OPERATIONS
SENECA FALLS, NEW YORK

Prepared and Released By The TECHNICAL PUBLICATIONS SECTION EMPORIUM, PENNSYLVANIA

OCTOBER, 1961

File Under
SPECIAL AND GENERAL PURPOSE CATHODE RAY TUBES

NOTES:

1. *The product of the anode voltage and the average anode current should be limited to 6 watts.*
2. *Brillance and definition decrease with decreasing anode voltage. In general, the anode voltage should not be less than 4,000 volts.*
3. *Visual extinction of undeflected focused spot.*
4. *This note applies to Type 5FP4A only. For specimen focusing coil similar to JEDEC focusing coil No. 106 positioned with air gap toward cathode ray tube screen and center line of air gap 3¼ inches from reference line. The indicated current is for condition with combined Grid No. 1 bias voltage and video—signal voltage adjusted to produce a highlight of 10 foot lamberts on a 3⅞ x 2⅞ inch picture area sharply focused at center of the screen.*
5. *This note applies to Types 5FP7A, 5FP11A, 5FP14A. For JEDEC focus coil No. 106 or equivalent, with the Grid No. 1 voltage adjusted to produce an accelerator current of 200 μamps and with distance from reference line to center of air gap equal to 2¾ inches.*
6. *The center of the undeflected unfocused spot will fall within a circle of 9 mm radius concentric with the center of the tube face.*
7. *Measured in accordance with MIL-E-1 specification, at anode current of 200 μa. This value applies to 5FP11A and 5FY14A. Value for 5FP7A is .020" Maximum.*

OUTLINE

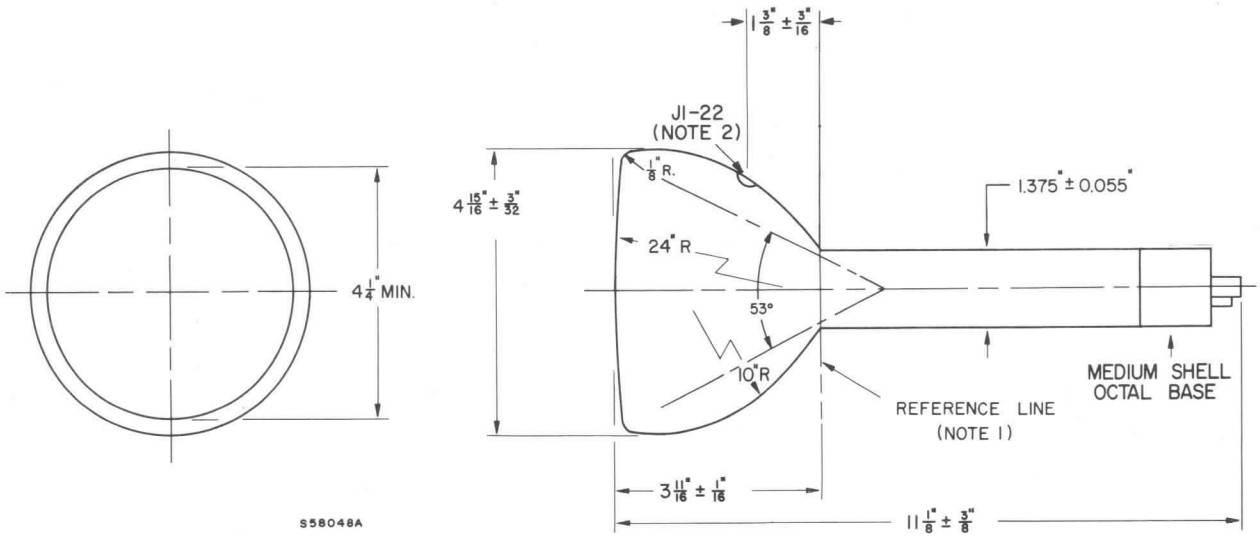

DIAGRAM NOTES:

1. *Reference line is determined by position where JEDEC Gauge #124 (a cylinder 1.430" + .003" – .000" ID and 2" long) will seat against cone of bulb.*
2. *The plane through the tube axis and Pin No. 5 may vary from the plane through the tube axis and anode terminal by an angular tolerance (measured about the tube axis) of 10°. Anode terminal is on same side of tube as Pin No. 5.*

SYLVANIA

engineering data service

SYLVANIA
5UP1
5UP7
5UP11

CHARACTERISTICS

GENERAL DATA

Focusing Method	Electrostatic
Deflection Method	Electrostatic
Phosphor	P1
Fluorescence	Green
Persistence	Medium
Faceplate	Clear

ELECTRICAL DATA

Heater Voltage	6.3 Volts
Heater Current	0.6 ±10% Ampere
Direct Interelectrode Capacitances (approx.)	
Grid to All Other Electrodes	8.0 μμf
Between Deflecting Plates 1-2	2.5 μμf
Between Deflecting Plates 3-4	2.5 μμf
Deflecting Plate 1[1] to All Other Electrodes	11.0 μμf
Deflecting Plate 2[1] to All Other Electrodes	8.0 μμf
Deflecting Plate 3[1] to All Other Electrodes	7.0 μμf
Deflecting Plate 4[1] to All Other Electrodes	8.0 μμf

MECHANICAL DATA

Minimum Useful Screen Diameter	4½ Inches
Base (Small-Shell Duodecal 10-Pin)	B10-75
or (Small Shell Duodecal 12-Pin)	B12-43
Basing	12E

MAXIMUM RATINGS (Absolute Maximum Values)

Anode No. 2 Voltage	2750 Volts dc
Anode No. 1 Voltage	1100 Volts dc
Grid Voltage	
Negative Bias Value	220 Volts dc
Positive Bias Value	0 Volts dc
Positive Peak Value	2 Volts
Peak Heater-Cathode Voltage	
Heater Negative with Respect to Cathode	140 Volts
Heater Positive with Respect to Cathode	140 Volts
Peak Voltage Between Anode No. 2 and Any Deflection Plate	550 Volts

TYPICAL OPERATING CONDITIONS

Anode No. 2 Voltage[2]	2000 Volts dc
Anode No. 1 Voltage for Focus	340 to 640 Volts dc
Maximum Grid Voltage Required for Cutoff[3]	-90 Volts dc
Deflection Factor[4, 5]	
Deflecting Plates 1-2[6]	56 to 77 Volts dc/Inch
Deflecting Plates 3-4[7]	46 to 62 Volts dc/Inch

CIRCUIT VALUES

Grid Circuit Resistance	1.5 Megohms Max.
Deflection Circuit Resistance	5.0 Megohms Max.

QUICK REFERENCE DATA

Special Purpose Tube
5" Direct Viewed
Round Glass Type
Electrostatic Deflection
Electrostatic Focus

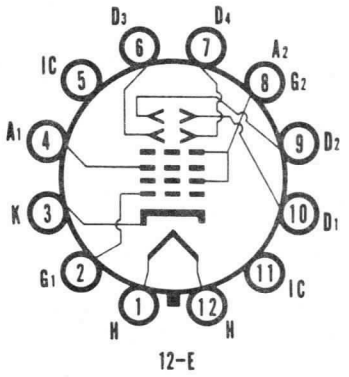

SYLVANIA ELECTRIC PRODUCTS INC.
TELEVISION PICTURE TUBE DIVISION
SENECA FALLS, NEW YORK

Prepared and Released By The TECHNICAL PUBLICATIONS SECTION EMPORIUM, PENNSYLVANIA
JULY, 1957

NOTES:

1. *Positive voltage on Pin No. 10 will move spot approximately in direction of Pin No. 4. Positive voltage on Pin No. 6 will move spot approximately in direction of Pin No. 1.*
2. *Brilliance and definition decrease with decreasing Anode No. 2 Voltage. In general, Anode No. 2 Voltage should not be less than 1000 volts for the Type 5UP1 and not less than 1500 volts for the Types 5UP7 and 5UP11.*
3. *Visual extinction of undeflected focused spot.*
4. *Angle between trace produced by plates D1-D2 and the plane through the tube axis and Pin No. 4 does not exceed 10°.*
5. *Angle between D1-D2 trace and D3-D4 trace is 90° ± 30.*
6. *Deflecting Plates 1-2 are nearer the screen.*
7. *Deflecting Plates 3-4 are nearer the base.*

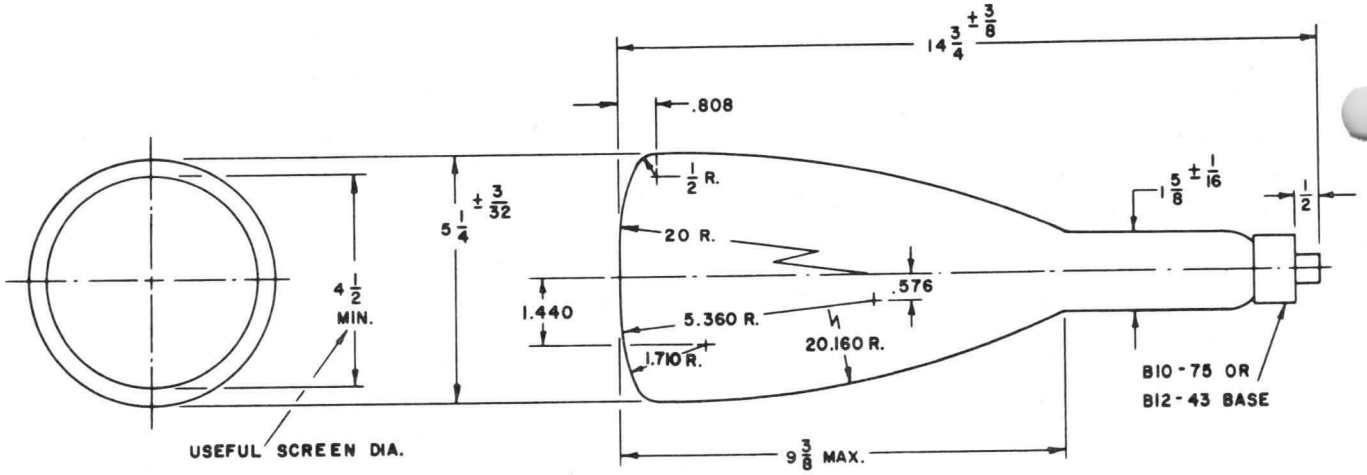

5UP7

The Sylvania Type 5UP7 is identical to the Type 5UP1 except it has a blue-white fluorescence, yellow phosphorescence, long persistence phosphor.

5UP11

The Sylvania Type 5UP11 is identical to the Type 5UP1 except it has blue phosphor and a short persistence.

SYLVANIA 5WP11 5WP-*

CHARACTERISTICS

GENERAL DATA

Focusing Method		Electrostatic
Deflection Method		Magnetic
Deflection Angle (approx.)		50°
Types*	**5WP11**	**5WP15**
Fluorescence	Blue	Blue-Green
Persistence	Short	Extremely Short
Screen		Aluminized
Faceplate		Flat, Clear

**In addition to the types shown, the 5WP- can be supplied with several other screen phosphors.*

ELECTRICAL DATA

Heater Voltage	6.3	Volts
Heater Current	0.6 ± 10%	Ampere
Direct Interelectrode Capacitances		
Cathode to All Other Electrodes	5	μμf
Grid No. 1 to All Other Electrodes	7.5	μμf Max.
External Conductive Neck Coating to Anode No. 2[1]	500	μμf Max.
	100	μμf Min.

MECHANICAL DATA

Minimum Useful Screen Diameter	4¼	Inches
Bulb Contact (Recessed Small Cavity Cap)	J1-21	
Base (Small Shell Duodecal 7-Pin)	B7-51	
Basing	12C	
Bulb	C40 Exp. 14 or Equivalent	

MAXIMUM RATINGS (Absolute Maximum Values)

Anode No. 2 Voltage	30,000	Volts dc
Anode No. 1 Voltage (Focusing Electrode)	6,600	Volts dc
Grid No. 2 Voltage	385	Volts dc
Grid No. 1 Voltage		
Negative Bias Value	165	Volts dc
Positive Bias Value	0	Volts dc
Positive Peak Value	2	Volts
Peak Heater-Cathode Voltage		
Heater Negative with Respect to Cathode		
During Warm-up Period		
Not to Exceed 15 Seconds	450	Volts
After Equipment Warm-up Period	140	Volts
Heater Positive with Respect to Cathode	140	Volts

QUICK REFERENCE DATA

5WP11—Video Recorder
5WP15—Flying Spot Scanner
5" Round Glass Type
Flat, Clear Faceplate
Magnetic Deflection
Acceleration Type Electrostatic Focus
No Ion Trap
External Conductive Coating on Neck
External Insulating Coating on Bulb
Aluminized Screen

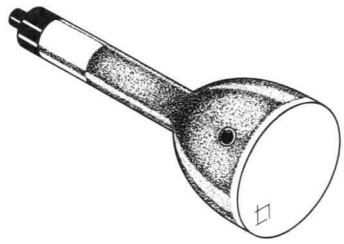

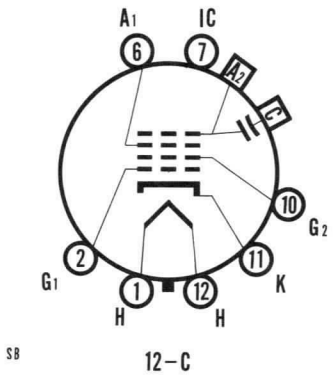

SYLVANIA ELECTRONIC TUBES
A Division of
Sylvania Electric Products, Inc.
PICTURE TUBE OPERATIONS
SENECA FALLS, NEW YORK

Prepared and Released By The
TECHNICAL PUBLICATIONS SECTION
EMPORIUM, PENNSYLVANIA
SEPTEMBER, 1959

TYPICAL OPERATING CONDITIONS

Anode No. 2 Voltage[2]	27,000	Volts	dc
Anode No. 1 Voltage for Focus	4200 to 5400	Volts	dc
Grid No. 2 Voltage[3]	200	Volts	dc
Grid No. 1 Voltage Required for Cutoff[4]	–42 to –98	Volts	dc
Anode No. 2 Current			
5WP11	20	μa	dc
5WP15	100	μa	dc
Max. Anode No 1. Current			
5WP11	25	μa	dc
5WP15	150	μa	dc
Grid No. 2 Current	–15 to +15	μa	dc

CIRCUIT VALUES

Grid No. 1 Circuit Resistance	1.5	Megohms Max.

NOTES:

1. *External conductive neck coating must be grounded.*
2. *Brilliance and definition decrease with decreasing anode voltage. In general, the anode voltage should not be less than 15,000 volts.*
3. *Subject to variation of ±40% when Grid No. 1 Voltage cutoff is desired at the average cutoff value of –70 volts.*
4. *Visual extinction of undeflected focused spot.*

WARNING:

X-ray radiation shielding may be necessary to protect against possible danger of personal injury from prolonged exposure at close range if this tube is operated at higher than the manufacturer's Maximum Rated Anode Voltage or 16,000 volts, whichever is less.

OUTLINE

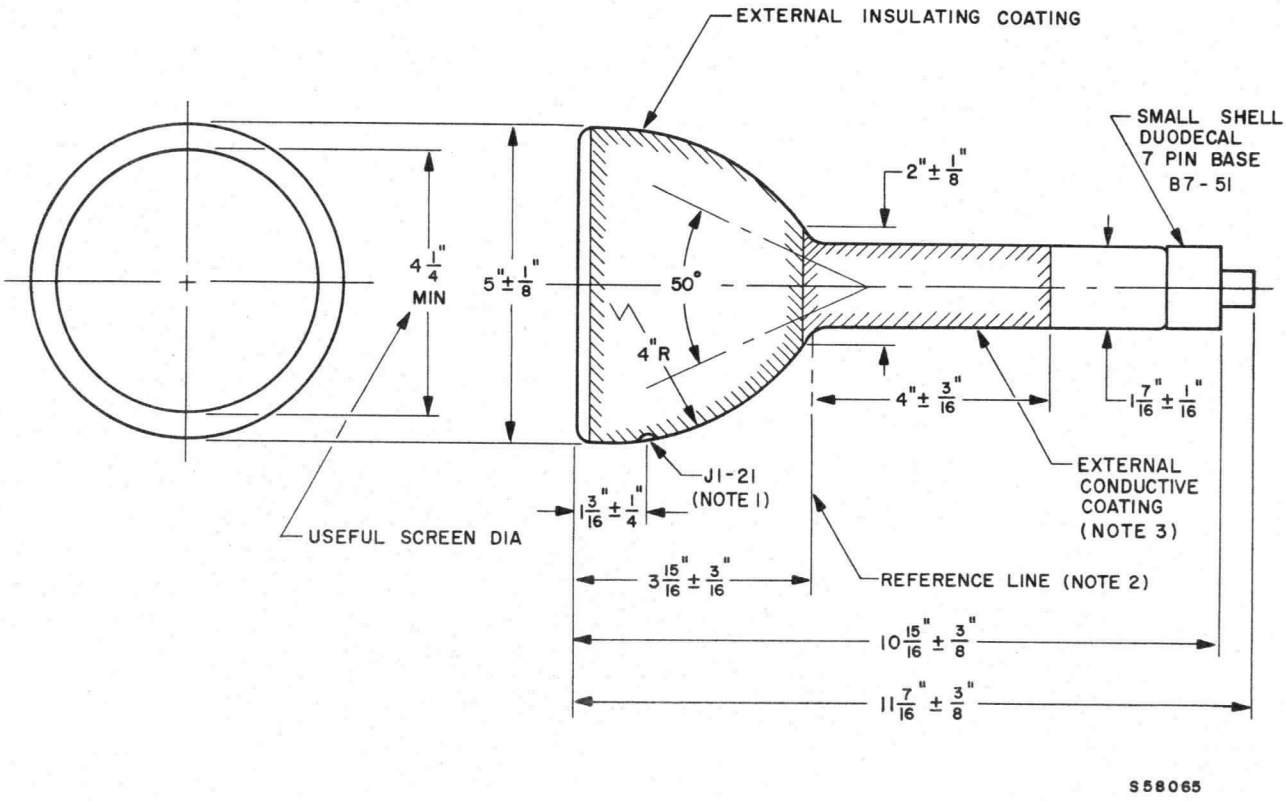

DIAGRAM NOTES:

1. *The plane through the tube axis and vacant pin position No. 3 may vary from the plane through the axis and Anode No. 2 terminal by an angular tolerance (measured about the tube axis) of ±10°.*

   Anode No. 2 terminal is on same side as vacant pin position No. 3.

2. *Reference line is determined by the plane C-C' of the reference line gauge (JEDEC No. G112) when the gauge is seated on the glass cone.*

3. *External conductive coating must be grounded.*

A Technical Publication of
SYLVANIA ELECTRIC
PRODUCTS INC.
EMPORIUM, PA.

CHARACTERISTICS

GENERAL DATA

Focusing Method	Electrostatic
Deflection Method	Magnetic
Deflection Angle (approx.)	40 Degrees

Types*

	5ZP15	5ZP16	5ZP24
Fluorescence	Blue-Green	Violet & Near Ultraviolet	Blue-Green
Persistence	Extremely Short	Extremely Short	Extremely Short

Screen	Aluminized
Faceplate	Clear, Non-Browning

**In addition to the types shown, the 5ZP- can be supplied with several other screen phosphors.*

ELECTRICAL DATA

Heater Voltage	6.3 Volts	
Heater Current	0.6 ± 10% Ampere	
Direct Interelectrode Capacitances (approx.)		
Cathode to All Other Electrodes	8 μμf	
Grid No. 1 to All Other Electrodes	5 μμf	
External Conductive Neck Coating to Anode[1]	500 μμf	Max.
	100 μμf	Min.

MECHANICAL DATA

Minimum Useful Screen Diameter	4¼ Inches	
Bulb Contact (Recessed Small Cavity Cap)	J1-21	
Base (Small Shell Duodecal 7-Pin)	B7-51	
Basing	12C	
Bulb Contact Aligns with Vacant Pin Position No. 3	±10 Degrees	

RATINGS

MAXIMUM RATINGS (Absolute Maximum Values)

Anode No. 2 Voltage	30,000 Volts	dc
Anode No. 1 Voltage (Focusing Electrode)	7,700 Volts	dc
Grid No. 2 Voltage	385 Volts	dc
Grid No. 1 Voltage		
Negative Bias Value	165 Volts	dc
Positive Bias Value	0 Volts	dc
Positive Peak Value	2 Volts	
Peak Heater-Cathode Voltage		
Heater Negative with Respect to Cathode During Warm-up Period Not to Exceed 15 Seconds	450 Volts	
After Equipment Warm-up Period	165 Volts	
Heater Positive with Respect to Cathode	165 Volts	

QUICK REFERENCE DATA

Flying Spot Scanner Tube
5" Round Glass Type
Flat Faceplate
Clear Non-Browning Faceplate
Magnetic Deflection
Acceleration Type Electrostatic Focus
No Ion Trap
External Conductive Coating on Neck
External Insulating Coating on Bulb
Aluminized Screen

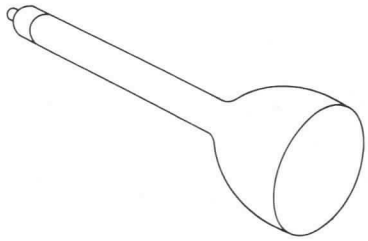

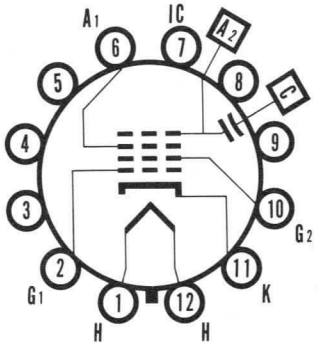

12-C

SYLVANIA ELECTRIC PRODUCTS INC.
TELEVISION PICTURE TUBE DIVISION
SENECA FALLS, NEW YORK

Prepared and Released By The TECHNICAL PUBLICATIONS SECTION EMPORIUM, PENNSYLVANIA
SEPTEMBER, 1958

TYPICAL OPERATING CONDITIONS

Anode Voltage[2]	27,000 Volts	dc
Anode No. 1 Voltage for Focus at Ib = 15 μa	5550 to 7050 Volts	dc
Grid No. 2 Voltage	200 Volts	dc
Grid No. 1 Voltage Required for Cutoff[3]	−42 to −98 Volts	dc
Anode Current	15 μa	dc
Maximum Anode No. 1 Current at Ib = 15 μa	25 μa	dc
Grid No. 2 Current	−15 to +15 μa	dc

CIRCUIT VALUES

Grid No. 1 Circuit Resistance	1.5 Megohms Max.

NOTES:

1. *External conductive neck coating must be grounded.*
2. *Brilliance and definition decrease with decreasing anode voltage. In general, the anode voltage should not be less than 20,000 volts.*
3. *Visual extinction of undeflected focused spot.*

DIAGRAM NOTES:

1. *Reference line is determined by the plane C-C' of the reference line gauge (JETEC No. 110) when the gauge is resting on the glass cone.*
2. *External conductive coating must be grounded.*

WARNING:

X-ray radiation shielding may be necessary to protect against possible danger of personal injury from prolonged exposure at close range if this tube is operated at higher than the manufacturer's Maximum Rated Anode Voltage or 16,000 volts, whichever is less.

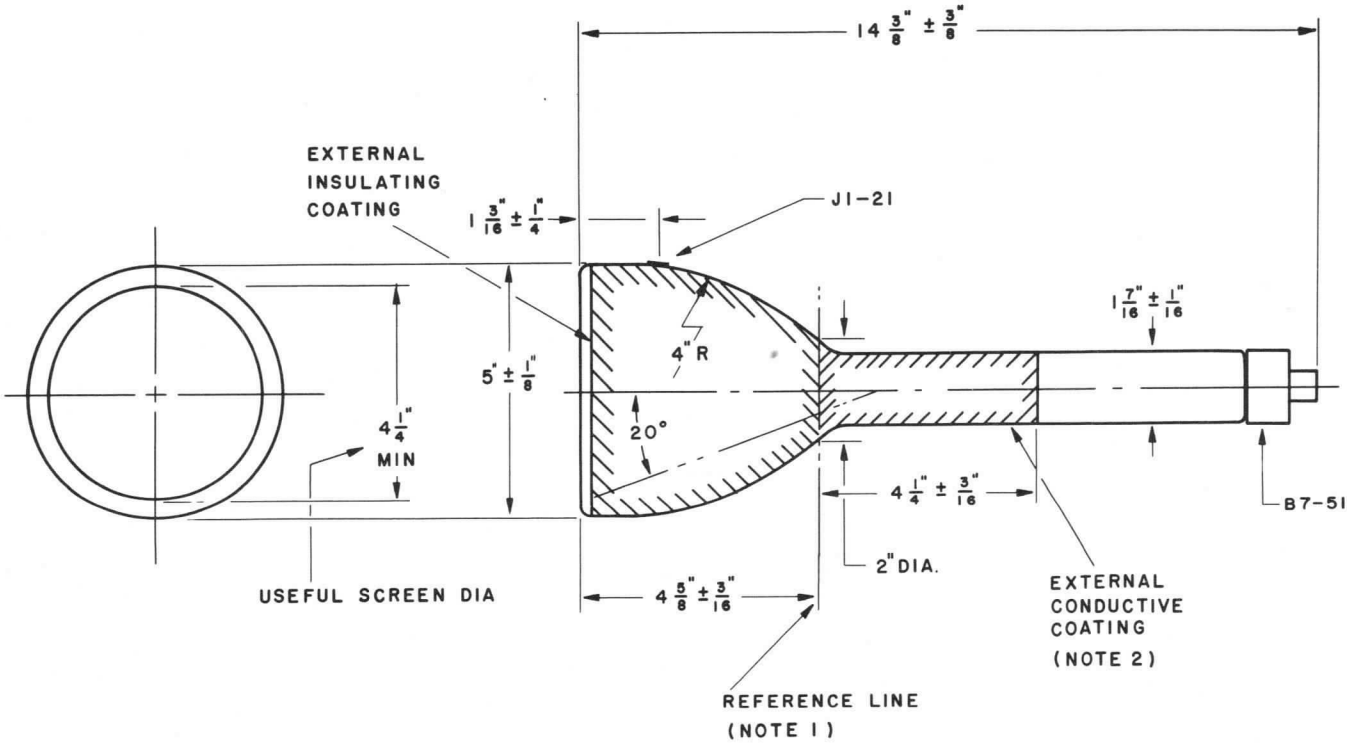

S58009

CHARACTERISTICS

GENERAL DATA[1]

Focusing Method			Electrostatic
Deflection Method			Electrostatic
Types*	Fluorescence	Phosphorescence	Persistence
6DP1	Green	.....	Medium
6DP2	Blue-Green	Green	Long
6DP7	Blue	Yellow	Long
6DP11	Blue	.....	Short
6DP14	Purple	Orange	Medium-Long
6DP19	Orange	Orange	Long
6DP25	Orange	Orange	Very Long
Faceplate			Clear

**In addition to the types shown, the 6DP- can be supplied with several other screen phosphors.*

ELECTRICAL DATA

Heater Voltage	6.3 Volts
Heater Current (all Sections)	1.50 to 1.98 Amperes
Direct Interelectrode Capacitances (approx.)	
Cathode to All Other Electrodes	6.0 $\mu\mu$f
Grid No. 1 to All Other Electrodes	6.5 $\mu\mu$f
D1 to D2	3.0 $\mu\mu$f
D3 to D4	2.0 $\mu\mu$f
D1 to All Other Electrodes	11.0 $\mu\mu$f
D2 to All Other Electrodes	11.0 $\mu\mu$f
D3 to All Other Electrodes	9.0 $\mu\mu$f
D4 to All Other Electrodes	9.0 $\mu\mu$f

MECHANICAL DATA

Overall Length	20-1/16 ± 3/8 Inches
Minimum Useful Screen Diameter	5-3/16 Inches
Bulb Contact (Recessed Small Ball)	J1-22
Base 25 Pin	B25-139
Basing	See Diagram
Base Alignment	
Base Key Aligns with Bulb Contact	± 10 Degrees
Positive Voltage on D1 Deflects the Beam Approx. Toward Base Key.	
Positive Voltage on D3 Deflects the Beam Approx. Toward Vacant Pin No. 23.	
Bulb Contact Alignment	
Post-accelerator Contact Aligns with D1-D2 trace of Gun "B"	± 3 Degrees
Bulb Contact on same side as Base Key	
Trace Alignment	
D1-D2 Trace Aligns with D3-D4 Trace	90 ± 2 Degrees
Corresponding Traces of each Gun align within ±2 Degrees	

QUICK REFERENCE DATA

Oscilloscope Tube
6" Direct Viewed
Flat Faceplate
Round Glass Type
Three Independent Guns
Electrostatic Deflection
Electrostatic Focus
Post Deflection Acceleration
High Deflection Sensitivity
High Deflection Accuracy
Aluminized Screen
25 Pin Base

SYLVANIA ELECTRIC PRODUCTS INC.
TELEVISION PICTURE TUBE DIVISION
SENECA FALLS, NEW YORK

Prepared and Released By The TECHNICAL PUBLICATIONS SECTION EMPORIUM, PENNSYLVANIA

SEPTEMBER, 1958

RATINGS

MAXIMUM RATINGS (Absolute Maximum Values)

Anode No. 3 Voltage	15,000 Volts	dc
Anode No. 2 Voltage	4,500 Volts	dc
Ratio Anode No. 3 Voltage to Anode No. 2 Voltage[2]	3.3:1 Maximum	
Anode No. 1 Voltage for Focus	1,540 Volts	dc
Grid No. 1 Voltage		
Negative Bias Value	220 Volts	dc
Positive Bias Value	0 Volts	dc
Positive Peak Value	2 Volts	
Peak Heater to Cathode Voltage		
Heater Negative with Respect to Cathode	200 Volts	
Heater Positive with Respect to Cathode	200 Volts	
Peak Voltage between Anode No. 2 and Any Deflection Plate	600 Volts	

TYPICAL OPERATING CONDITIONS

Anode No. 3 Voltage	12,000 Volts	dc
Anode No. 2 Voltage	4,000 Volts	dc
Anode No. 1 Voltage for Focus[3]	950 to 1225 Volts	dc
Grid No. 1 Voltage[4]	−75 to −124 Volts	dc
Modulation[5]	35 Volts	dc Max.
Line Width "A"[6]	.015 Max.	Inches
Deflection Factors		
D1-D2	112 to 138 Volts	dc/Inch
D3-D4	105 to 130 Volts	dc/Inch
Deflection Factor Uniformity[7]	5% Maximum	
Undeflected Spot Position[8]	Within 15 MM Square	
Useful Scan[9]		
D1-D2	4 Inches	
D3-D4	4 Inches	
Interaction Factor[10]	6×10^{-5} Max.	In./Volt
Pattern Distortion[11 & 12]		
Anode No. 1 Focus Current		
with Ib3 = 50 μadc	−10 to +5 μa	dc
with Ec1 = 0 Volts	−50 to +5 μa	dc

CIRCUIT VALUES

Grid No. 1 Circuit Resistance	1.5 Meg.	Max.
Deflection Circuit Resistance	1.0 Meg.	Max.

(It is recommended that the deflecting electrode circuit resistances be approximately equal. For low beam current conditions the resistance may be up to 5 megs.)

NOTES:

1. *Values are for each section unless otherwise specified.*
2. *This tube is designed for optimum performance when operating at an Eb3/Eb2 ratio of 3.0. Operation at other ratios may result in changes in deflection uniformity and pattern distortion.*
3. *At the specified operating condition, the focus voltage at Ib3 = 25 μadc shall be between 1000 and 1225 Volts dc and at Ib3 = 50 μadc shall be between 975 and 1225 volts dc. Scanning pattern and focus as per reference 4.12.6.1 of MIL-E-1C.*
4. *Visual extinction of undeflected focused spot.*
5. *For an Ib3 = 25 μadc. The modulation factor at Ib3 = 50 μadc shall be 50 V. Max.*

NOTES: (Cont.)

6. *For an Ib3 = 25 μadc measured in accordance with MIL-E-1C.*
7. *The deflection factor (for both D1-D2 and D3-D4 plate pairs separately) for a deflection of 75% of the minimum useful scan will not differ from the deflection factor at 25% of the minimum useful scan by more than the indicated value.*
8. *Centered with respect to the tube face and with the tube shielded.*
9. *Useful scan shall be ±2 Inches Min. from tube face center.*
10. *The deflection of one beam when balanced dc voltages are applied to the deflection electrodes of another beam will not be greater than the specified value.*
11. *The total horizontal movement on the left or right ends of a 3" horizontal trace (centered with respect to the tube face) deflected vertically 1.5" above and below the center of the tube face shall not exceed 0.075". The D1-D2 trace shall be considered horizontal.*
12. *The total vertical movement of the upper or lower ends of a 3" vertical trace centered on the tube face, deflected horizontally 1.5" to the left and right of the center of the tube face shall not exceed 0.075". The D3-D4 trace shall be considered vertical.*

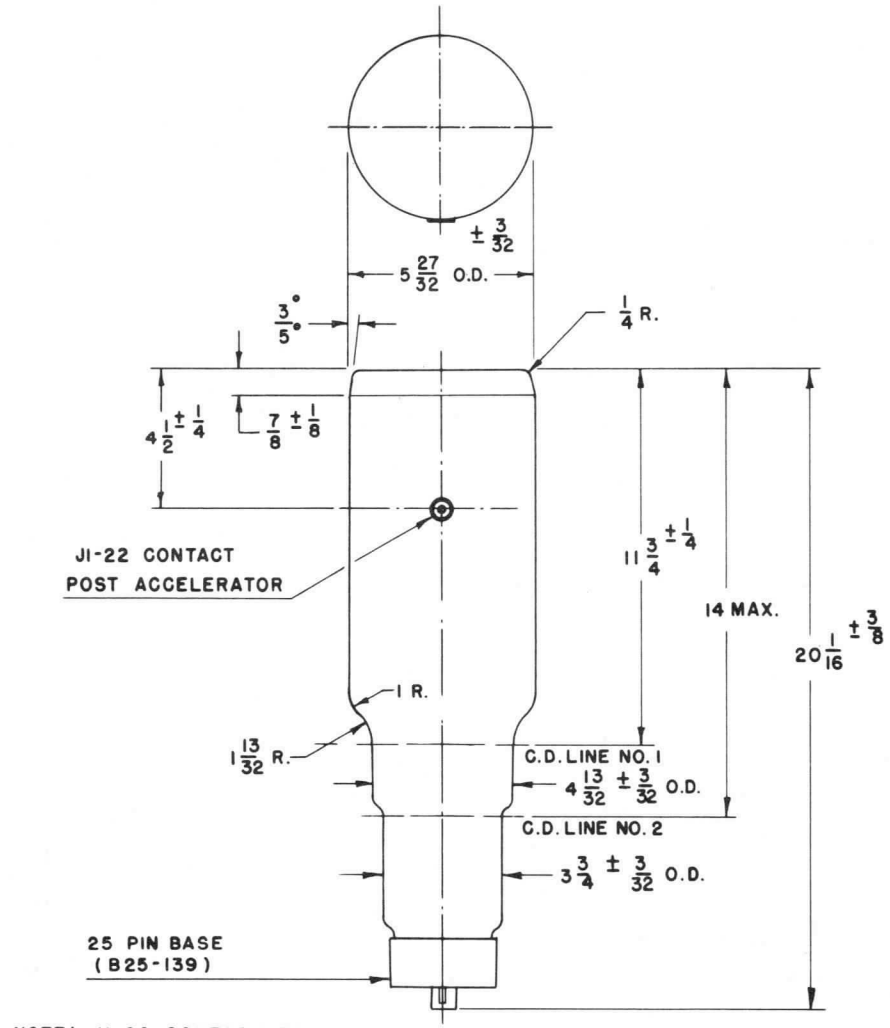

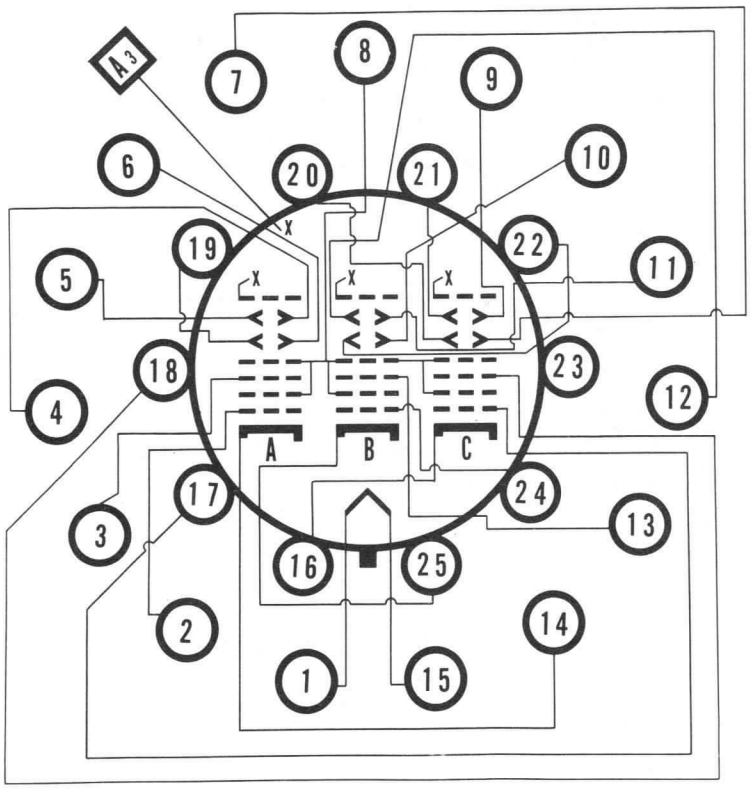

ELEMENTS COMMON TO ALL THREE GUNS

J1-22 (A3) Post Accelerator

Pin No. 8 Accelerator

Pins No. 1 & 15 Heater

GUN A

Pin No.	Element
2	Grid No. 1
3	Focusing Electrode
4	Deflector D2
5	Deflector D1
6	Deflector D3
14	Cathode
19	Deflector D4

GUN B

Pin No.	Element
10	Deflector D3
11	Deflector D2
12	Deflector D1
13	Focusing Electrode
22	Deflector D4
24	Grid No. 1
25	Cathode

GUN C

Pin No.	Element
7	Deflector D3
9	Deflector D2
16	Cathode
17	Grid No. 1
18	Focusing Electrode
20	Deflector D4
21	Deflector D1

SYLVANIA

engineering data service

SYLVANIA
7ABP7
7ABP7A
7ABP14
7ABP14A
7ABP19
7ABP19A

CHARACTERISTICS

GENERAL DATA

Focusing Method	Self Focusing (Electrostatic)
Deflection Method	Magnetic
Deflection Angle (approx.)	50 Degrees
Phosphor	P7
Fluorescence	Blue-White
Phosphorescence	Yellow
Persistence	Long
Faceplate	Clear

ELECTRICAL DATA

Heater Voltage	6.3 Volts
Heater Current	0.6 ±10% Ampere
Direct Interelectrode Capacitances (approx.)	
Cathode to All Other Electrodes	5 μμf
Grid No. 1 to All Other Electrodes	6 μμf

MECHANICAL DATA

Minimum Useful Screen Diameter	6 Inches
Bulb Contact (Recessed Small Cavity Cap)	J1-21
Base (Small Shell Duodecal 6-Pin)	B6-63
Basing	12M
Bulb Contact Aligns with Pin No. 3	±10 Degrees

MAXIMUM RATINGS (Absolute Maximum Values)

Anode Voltage	11,000 Volts	dc
Grid No. 4 (Focusing Electrode) Voltage	−550 to +1100 Volts	dc
Grid No. 2 Voltage	770 Volts	dc
Grid No. 1 Voltage		
Negative Bias Value	200 Volts	dc
Positive Bias Value[1]	0 Volts	dc
Positive Peak Value	0 Volts	
Peak Heater-Cathode Voltage		
Heater Negative with Respect to Cathode	200 Volts	
Heater Positive with Respect to Cathode	200 Volts	

TYPICAL OPERATING CONDITIONS

Anode Voltage[2]	7000 Volts	dc
Grid No. 4 Voltage for Focus[3]	0 to 250 Volts	dc
Grid No. 2 Voltage	300 Volts	dc
Grid No. 1 Voltage[4]	−28 to −72 Volts	dc

CIRCUIT VALUES

Grid No. 1 Circuit Resistance	1.5 Megohms Max.

QUICK REFERENCE DATA

Special Purpose Tube
7″ Direct Viewed
Round Glass Type
Electrostatic Focus
Magnetic Deflection
High Resolution

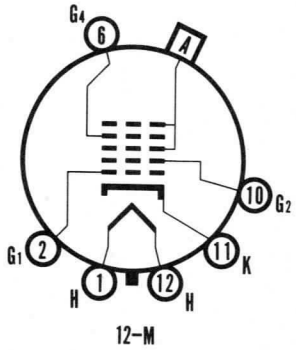

12-M

SYLVANIA ELECTRIC PRODUCTS INC.
TELEVISION PICTURE TUBE DIVISION
SENECA FALLS, NEW YORK

Prepared and Released By The TECHNICAL PUBLICATIONS SECTION EMPORIUM, PENNSYLVANIA
JULY, 1957

NOTES:

1. *At or near this rating, the effective resistance of the anode supply should be adequate to limit the anode input power to 6 watts. The screen of the 7ABP19 can be permanently damaged should the current density be permitted to rise too high. To prevent burning, minimum beam current densities should be employed.*
2. *Brilliance and definition decrease with decreasing anode voltage. In general, anode voltage should not be less than 5,000 volts, except for the 7ABP19. For this type the anode voltage should not be less than 7,000 volts.*
3. *With Eg1 adjusted for Ib = 100 μa and beam focused for minimum width of individual lines at center of screen.*
4. *Visual extinction of undeflected focused spot.*

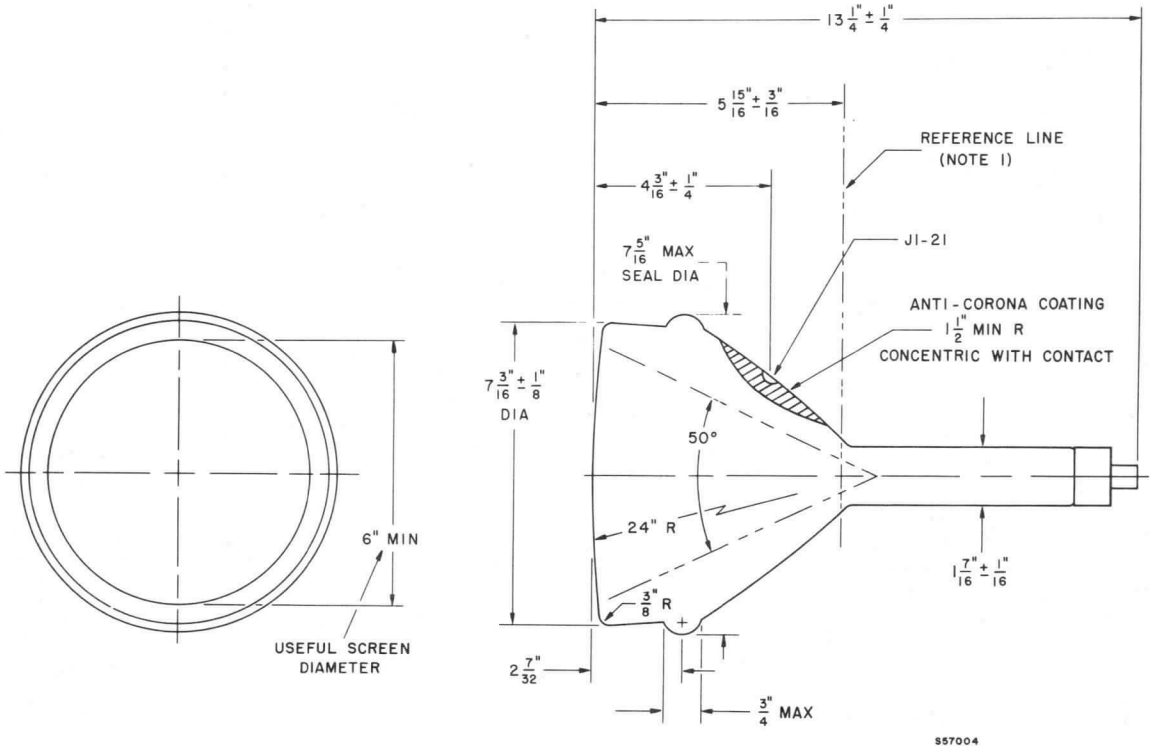

DIAGRAM NOTES:

1. *Reference line is determined by the point where 1.500* $^{+.003}_{-.000}$ *inch diameter ring gauge 2 inches long will stop.*

7ABP7A

The Sylvania Type 7ABP7A is identical to the Type 7ABP7 except that it has an aluminized screen.

7ABP14

The Sylvania Type 7ABP14 is identical to the Type 7ABP7 except that it has a purple fluorescence, orange phosphorescence and medium long persistence phosphor.

7ABP14A

The Sylvania Type 7ABP14A is identical to the Type 7ABP14 except that it has an aluminized screen.

7ABP19

The Sylvania Type 7ABP19 is identical to the Type 7ABP7 except that it has an orange fluorescence and long persistence.

7ABP19A

The Sylvania Type 7ABP19A is identical to the Type 7ABP19 except that it has an aluminized screen.

WARNING:

X-ray radiation shielding may be necessary to protect against possible danger of personal injury from prolonged exposure at close range if this tube is operated at higher than the manufacturer's Maximum Rated Anode Voltage or 16,000 volts, whichever is less.

A Technical Publication of

SYLVANIA ELECTRIC
PRODUCTS INC.

EMPORIUM, PA.

SYLVANIA

engineering data service

SYLVANIA
7AEP1
7AEP*

CHARACTERISTICS

GENERAL DATA

Focusing Method	Electrostatic
Deflection Method	Electrostatic

Types*	Fluorescence	Phosphorescence	Persistence
7AEP1	Green	———	Medium
7AEP2	Blue - Green	Green	Long
7AEP7	Blue - White	Yellow	Long
7AEP11	Blue	———	Short

Faceplate . . . . . Flat,Clear

* In addition to the types shown, the 7AEP- can be supplied with several other screen phosphors.

ELECTRICAL DATA

Heater Voltage	6.3	Volts
Heater Current	0.6 ± 10%	Amperes

Direct Interelectrode Capacitances

	MIN.	MAX.	
Cathode to All Other Electrodes	2.9	4.5	μμf
Grid No. 1 to All Other Electrodes	3.7	6.4	μμf
D1 to D2	1.7	2.7	μμf
D3 to D4	1.0	1.8	μμf
D1 to All Other Electrodes	5.4	7.6	μμf
D2 to All Other Electrodes	5.4	7.6	μμf
D3 to All Other Electrodes	3.4	5.5	μμf
D4 to All Other Electrodes	3.4	5.5	μμf

MECHANICAL DATA

Minimum Useful Screen Diameter	6⅛ Inches
Anode No. 3 Contact (Recessed Small Ball Cap)	J1-22
Bulb	J56Y1
Base (Medium Shell Diheptal 12-Pin)	B12-37
Basing	14J
Base Alignment	
D1-D2 trace aligns with Pin No. 5 and tube axis	0 ± 10 Degrees
Positive Voltage on D1 deflects beam approx. toward Pin No. 5.	
Positive Voltage on D3 deflects beam approx. toward Pin No. 2	
Trace Alignment	
Angle Between Traces D1-D2 and D3-D4	90 ± 1 Degrees
Bulb Contact Alignment	
J1-22 contact aligns with D1-D2 trace	0 ± 10 Degrees
J1-22 contact on same side as Pin No. 5	
Weight (Approx.)	3½ Pounds

MAXIMUM RATINGS (Absolute Maximum Values)

Anode No. 2 Input	6 Watts
Anode No. 3 Voltage	8800 Volts dc
Anode No. 2 Voltage	4400 Volts dc

QUICK REFERENCE DATA

7" Direct Viewed
Flat Faceplate
Round Glass Type
Electrostatic Deflection
Electrostatic Focus
Post Deflection Acceleration
High Deflection Sensitivity
High Deflection Accuracy
Close Tolerances

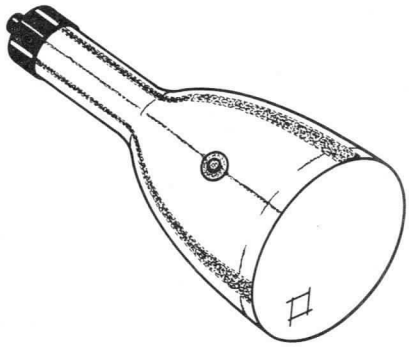

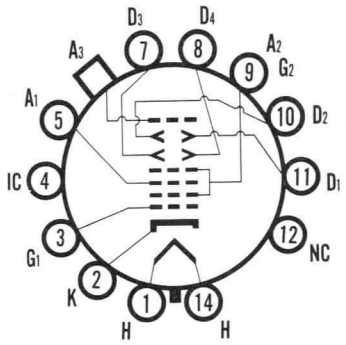

14-J

SYLVANIA
ELECTRONIC TUBES
A Division of
Sylvania Electric Products Inc.
PICTURE TUBE OPERATIONS
SENECA FALLS, NEW YORK

Prepared and Released By The
TECHNICAL PUBLICATIONS SECTION
EMPORIUM, PENNSYLVANIA

APRIL, 1960

File Under
SPECIAL AND GENERAL PURPOSE
CATHODE RAY TUBES

MAXIMUM RATINGS (Absolute Maximum Values) (cont'd)

Ratio of Anode No. 3 Voltage to Anode No. 2 Voltage[1]	2 : 1 Maximum
Anode No. 1 Voltage (Focusing Electrode)	1375 Volts dc
Grid No. 1 Voltage	
Negative Bias Value	220 Volts dc
Positive Bias Value	0 Volts dc
Positive Peak Value	0 Volts
Peak Heater-Cathode Voltage	
Heater Negative with Respect to Cathode	200 Volts
Heater Positive with Respect to Cathode	200 Volts
Peak Voltage Between Anode No. 2 and Any Deflection Plate	825 Volts

TYPICAL OPERATING CONDITIONS

Anode No. 3 Voltage	4000 Volts dc
Anode No. 2 Voltage	2000 Volts dc
Anode No. 1 Voltage for Focus	380 to 620 Volts dc
Grid No. 1 Voltage Required for Cutoff[2]	−45 to −75 Volts dc
Deflection Factors	
Deflection Plates 1-2[3]	81 to 101 Volts dc/Inch
Deflection Plates 3-4[3]	67 to 83 Volts dc/Inch
Pattern Distortion[4]	2½% Maximum
Spot Position[5]	Within a 15 MM. Square
Modulation (Ib3 = 25μa)[6]	37 Volts dc Max.
Line Width "A" (Ib3 = 25μa)[6]	.022 Inches Max.
Light Output (7AEP1, Ib3 = 25μa)[6]	20 Ft. Lamberts Min.
Deflection Factor Uniformity[6]	3% Maximum
Focusing Electrode Current for any Operating Condition	−15 to +10 μa

CIRCUIT VALUES

Grid No. 1 Circuit Resistance	1.5 Megohms Max.
Resistance in Any Deflecting Plate Circuit[7]	1.0 Megohms Max.

NOTES:

1. *This tube is designed for optimum performance when operating at an Eb3/Eb2 ratio of 2.0. Operation at other ratios of Eb3/Eb2 may result in changes in deflection uniformity and pattern distortion.*
2. *Visual extinction of undeflected focused spot.*
3. *Deflecting plates 1-2 are nearer the screen. Deflecting plates 3-4 are nearer the base.*

NOTES: (Cont'd)

4. *All portions of a raster pattern, adjusted so its widest points just touch the sides of a 4.100 inch square will fall within the area bounded by the 4.100 inch square and an inscribed 3.900 inch square.*
5. *Centered on tube face, sides parallel to deflection axes. Tube to be magnetically shielded and deflecting plates connected to Anode No. 2.*
6. *Measured with accordance Mil-E-1 specs.*
7. *It is recommended that the deflecting plate circuit resistance be approximately equal. Higher resistance values up to five megohms may be used for low beam current operations.*

WARNING:

X-ray radiation shielding may be necessary to protect against possible danger of personal injury from prolonged exposure at close range if this tube is operated at higher than the manufacturer's Maximum Rated Anode Voltage or 16,000 volts, whichever is less.

OUTLINE

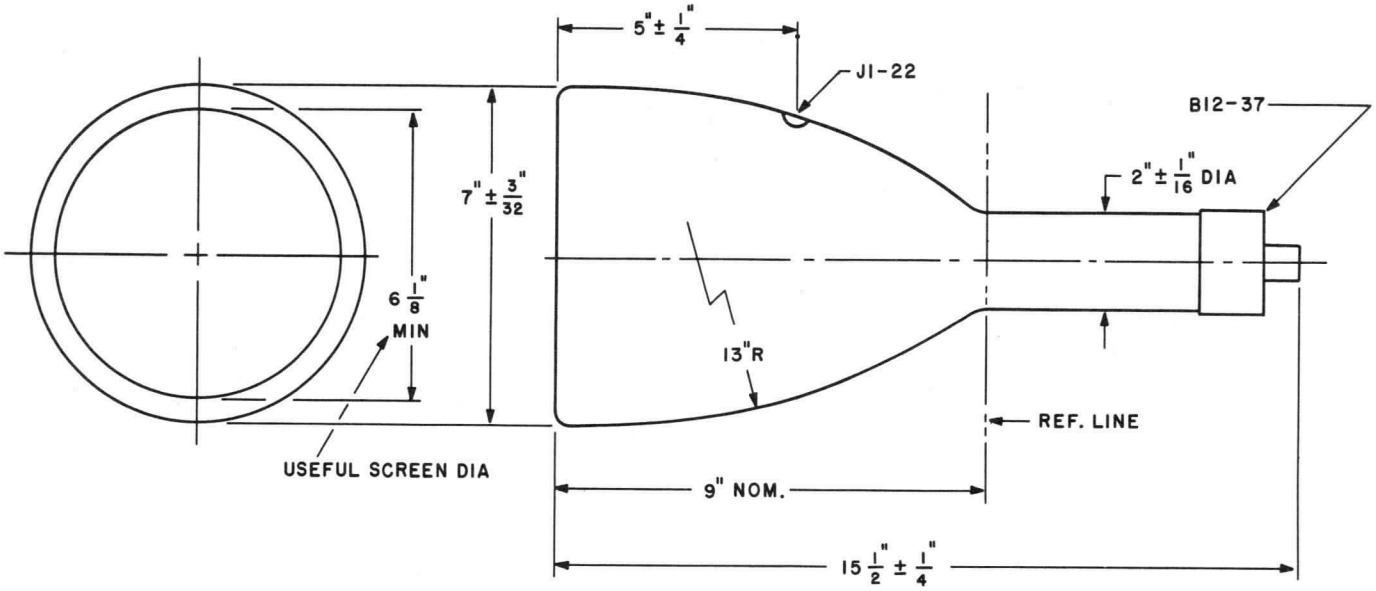

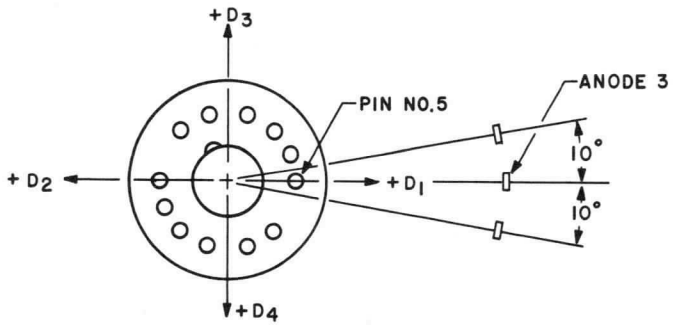

D59016

BOTTOM VIEW

SYLVANIA

engineering data service

SYLVANIA
7AUP4
7AUP7

CHARACTERISTICS

GENERAL DATA

Focusing Method	Electrostatic	
Deflecting Method	Magnetic	
Deflection Angle (Approx.)	70	Degrees

	7AUP4	7AUP7
Phosphor*	Aluminized P4	Aluminized P7
Fluorescence	White	White
Persistence	Short to Medium	Long
Phosphorescence	—	Yellow-Green

Faceplate . . . . . Spherical, Clear Glass

*In addition to the types shown, the 7AUP- can be supplied with several other screen phosphors.

ELECTRICAL DATA

Heater Voltage	6.3	Volts
Heater Current	0.3 ± 5%	Ampere
Direct Interelectrode Capacitances (Approx.)		
Cathode to All Other Electrodes	7.0	μμf
Grid No. 1 to All Other Electrodes	9.0	μμf
Grid No. 2 to All Other Electrodes	7.0	μμf

MECHANICAL DATA

Minimum Useful Screen Diameter	6	Inches
Bulb	LEA 480 or Equivalent	
Bulb Contact (Recessed Small Ball Cap)	J1-22	
Base[1]	E9-37	
Basing	9HT	
Weight (Approx.)	2¼	Pounds

RATINGS

MAXIMUM RATINGS (Absolute Maximum Values)

Anode Voltage	11,000 Volts	dc
Grid No. 4 Voltage (Focusing Electrode)	1100 Volts	dc
Grid No. 2 Voltage	770 Volts	dc
Grid No. 1 Voltage		
Negative Bias Value	155 Volts	dc
Positive Bias Value	0 Volts	dc
Positive Peak Value	0 Volts	
Peak Heater-Cathode Voltage		
Heater Negative with Respect to Cathode		
During Warm-up Period not to Exceed 15 Seconds	450 Volts	
After Warm-up Period	200 Volts	
Heater Positive with Respect to Cathode	200 Volts	

TYPICAL OPERATING CONDITIONS

Anode Voltage	8000 Volts	dc Max.
Grid No. 4 Voltage for Focus[2]	0 to 300 Volts	dc
Grid No. 2 Voltage	300 Volts	dc
Grid No. 1 Voltage		
Required for Spot Cutoff	−25 to −60 Volts	dc
Line Width[3]	0.012 Inch	

CIRCUIT VALUES

Grid No. 1 Circuit Resistance	1.5 Megohms	Max.
Grid No. 2 Circuit Resistance[4]	10,000 Ohms	Max.
Grid No. 4 Circuit Resistance[4]	10,000 Ohms	Max.

QUICK REFERENCE DATA

Monitor Tube (7AUP4)
Radar Indicator (7AUP7)
7″ Direct Viewed
Round Glass Type
Spherical Faceplate
Clear Glass
Aluminized Screen
Magnetic Deflection
Electrostatic Focus
⅞ Inch Neck Diameter
Short Length

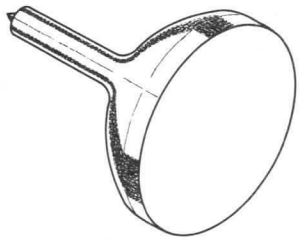

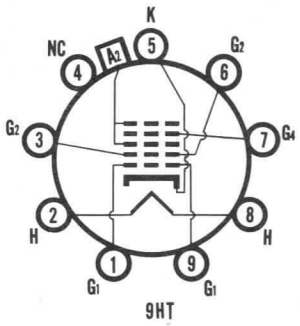

SYLVANIA
ELECTRONIC TUBES
A Division of
Sylvania Electric Products Inc.
PICTURE TUBE OPERATIONS
SENECA FALLS, NEW YORK

Prepared and Released By The
TECHNICAL PUBLICATIONS SECTION
EMPORIUM, PENNSYLVANIA

DECEMBER, 1960

File Under
SPECIAL AND GENERAL PURPOSE
CATHODE RAY TUBES

NOTES:

1. *A socket with a center opening to clear the tubulation should be used. Care should be exercised to avoid danger to the tubulation.*
2. *With combined Grid No. 1 Bias Voltage and Video-Signal Voltage adjusted to give an anode current of 50 μa on a 6" x 6" raster.*
3. *With an anode current of 50 μa, typical line width at center of faceplate, using half amplitude points of light energy distribution of a single line is 0.012 inch.*
4. *Protective resistance in the Grid No. 2 and Grid No. 4 circuits is advisable to prevent damage to the tube.*

WARNING:

X-ray radiation shielding may be necessary to protect against possible danger of personal injury from prolonged exposure at close range if this tube is operated at higher than the manufacturer's Maximum Rated Anode Voltage or 16,000 volts, whichever is less.

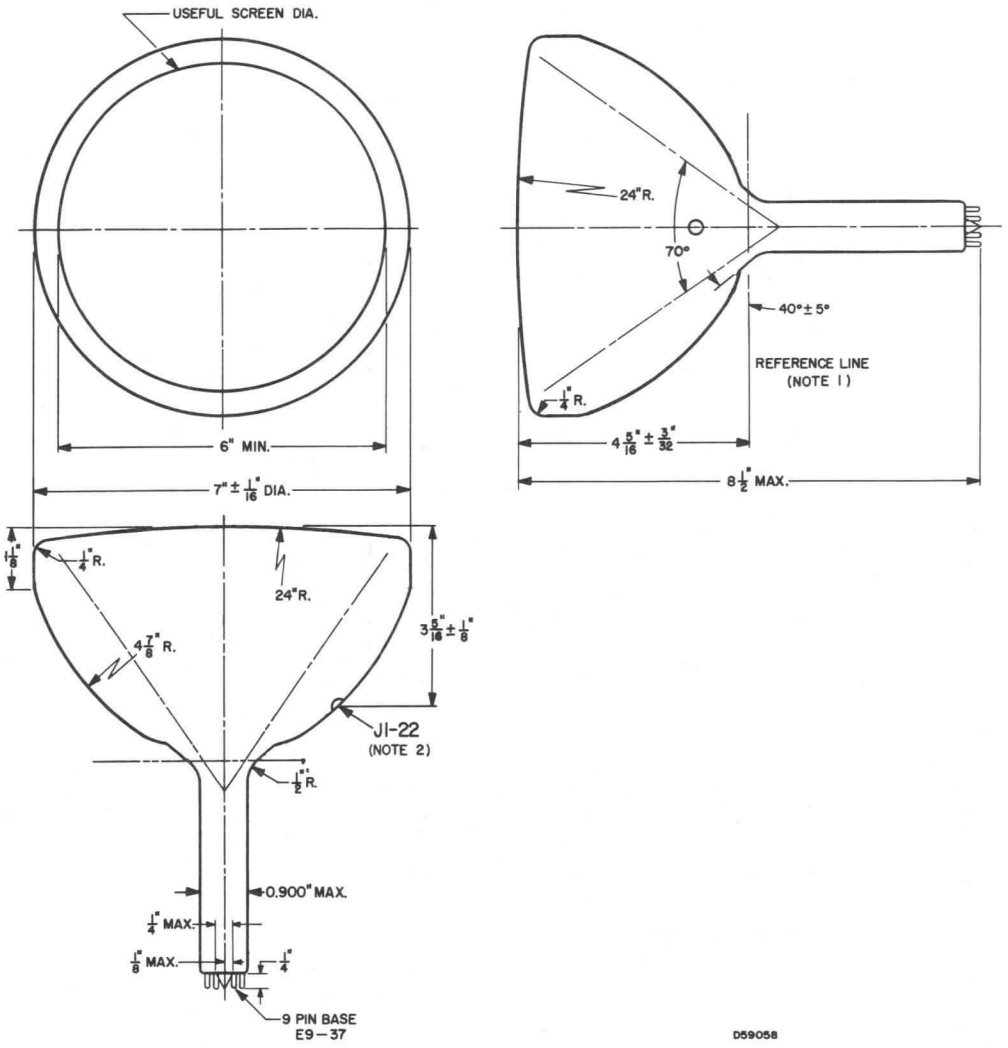

DIAGRAM NOTES:

1. *Reference Line is determined by the point where the leading edge of a 1.640 inch inside diameter ring gauge will stop.*
2. *Anode contact (J1-22) aligns with space between Pins #1 and #9.*

CHARACTERISTICS

GENERAL DATA

Focusing Method . . . . . Electrostatic
Deflecting Method . . . . . Electrostatic
Phosphors

Types	Fluorescence	Phosphorescence	Persistence
7AYP1	Green	—	Medium
7AYP2	Blue-Green	Green	Long
7AYP7	Blue-White	Yellow	Long
7AYP19	Orange	Orange	Long
7AYP25	Orange	Orange	Medium

Faceplate . . . . . Clear, Spherical

*In addition to the types shown, the 7AYP– can be supplied with several other screen phosphors.

ELECTRICAL DATA

Heater Voltage . . . . . 6.3 Volts
Heater Current . . . . . 0.6 ± 10 % Ampere
Direct Interelectrode Capacitances (Approx.)
Cathode to All Other Electrodes . . . . . 6 pf
Grid No. 1 to All Other Electrodes . . . . . 7 pf
Between Deflecting Plates 1-2 . . . . . 1.5 pf
Between Deflecting Plates 3-4 . . . . . 1.3 pf
Deflecting Plate 1 to All Other Electrodes . . . 6.5 pf
Deflecting Plate 2 to All Other Electrodes . . . 6.5 pf
Deflecting Plate 3 to All Other Electrodes . . . 5.5 pf
Deflecting Plate 4 to All Other Electrodes . . . 5.5 pf

MECHANICAL DATA

Minimum Useful Screen Dimensions
(Maximum Assured) . . . . . $3\frac{1}{4}$ x $5\frac{1}{4}$ Inches
Overall Length . . . . . $17\frac{1}{2} \pm \frac{3}{8}$ Inches
Greatest Bulb Dimensions
Diagonal . . . . . $6\frac{5}{8} \pm \frac{1}{16}$ Inches
Width . . . . . $6\frac{1}{32} \pm \frac{1}{16}$ Inches
Height . . . . . $4\frac{1}{32} \pm \frac{1}{16}$ Inches
Neck Contacts . . . . . Small Ball J1-25
Bulb Contact . . . . . Recessed Small Ball Cap J1-22
Base . . . . . 12 Pin B12-37
Bulb Contact Alignment
Bulb Contact Located on Tube Centerline ± ¼ Inch on Same Side as Pin No. 5
Base Alignment
D1-D2 Aligns with Pin No. 5 and Tube Axis ±10 Degrees
Positive Voltage on D1 Deflects Beam Approximately Toward Pin No. 5
Positive Voltage on D3 Deflects Beam Approximately Toward Pin No. 1
Trace Alignment
Angle Between D3-D4 and D1-D2 Trace . . . 90 ± 1 Degrees
D1-D2 Trace Aligns with Bulb Wall . . . . . 90 ± 1 Degrees
Mounting Position . . . . . Any

QUICK REFERENCE DATA

Oscilloscope Tube
7″ Direct Viewed
Rectangular Glass Type
Electrostatic Deflection
Electrostatic Focus
Clear, Spherical Faceplate

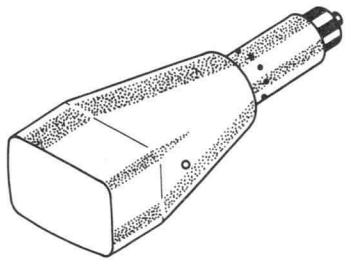

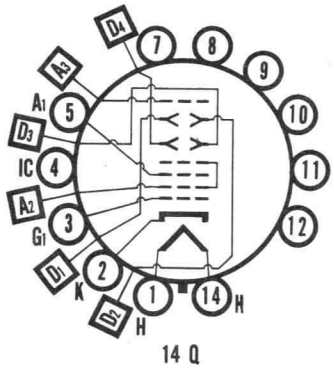

14 Q

SYLVANIA ELECTRIC PRODUCTS INC.

Electronic Components Group
ELECTRONIC TUBE DIVISION
SENECA FALLS, NEW YORK

A Technical Publication

JULY, 1965

File Under

SPECIAL AND GENERAL PURPOSE CATHODE RAY TUBES

MAXIMUM RATING (Design Center Values)[1]

Post Accelerator Voltage	16,000 Vdc	Max.
Anode Voltage[2]	8000 Vdc	Max.
Ratio Post Accelerator Voltage to Anode Voltage	2.0	Max.
Anode Current	Note 3	
Focusing Electrode Voltage	2500 Vdc	Max.
Grid No. 1 Voltage		
Negative Bias Value	200 Vdc	Max.
Positive Bias Value	0 Vdc	Max.
Positive Peak Value	2 Vdc	Max.
Peak Heater Cathode Voltage		
Heater Negative with Respect to Cathode	180 Vdc	Max.
Heater Positive with Respect to Cathode	180 Vdc	Max.
Peak Voltage Between Anode and Any Deflection Electrode	1500 Volts	Max.

TYPICAL OPERATING CONDITIONS

Post Accelerator	10,000	8000 Vdc	
Anode Voltage	5000	4000 Vdc	
Focusing Electrode Voltage	1375 to 1875	1100 to 1500 Vdc	
Grid No. 1 Voltage[4]	−50 to −90	−40 to −72 Vdc	
Deflection Factors			
D1 to D2	125 to 150	100 to 120 Vdc/In.	
D3 to D4	100 to 125	80 to 100 Vdc/In.	
Deflection Factor Uniformity[5]		3 Percent	Max.
Focusing Electrode Current		−15 to +10 Microamperes	
Line Width[6]		0.30 mm	Max.
Spot Position[7]		5/16 In. Radius Circle	

MAXIMUM CIRCUIT VALUES

Grid No. 1 Circuit Resistance	1.5 Megohms	Max.
Resistance in Any Deflecting Electrode Circuit[8]	3.0 Megohms	Max.

NOTES:

1. *The maximum ratings provide a ten per cent safety factor in accordance with the standard design center system of rating cathode ray tubes. The tube will withstand the combined effects of variations in line voltage and components provided the maximum design center values are not exceeded by more than ten per cent.*
2. *Anode, Grid No. 2 and Grid No. 4 which are connected together within the tube are referred to herein as anode.*
3. *The phosphor screen may be damaged if the exciting current density is greater than 1.4 microamperes per square centimeter for P25, and if greater than .06 microamperes per square centimeter for P19.*
4. *For visual extinction of undeflected focused spot.*
5. *Deflection factor for deflection of 75 % of useful screen dimensions, shall not differ from deflection factor for deflection of 25 % of the useful screen dimensions by more than the indicated value.*
6. *Measured in accordance with MIL-E-1C specifications using Ib3 = 2μAdc, and anode voltage of 4,000 volts and a post-accelerator voltage of 8,000 volts.*
7. *The center of the focused undeflected spot will be within a circle of 5/16 inch radius, centered on the tube face.*
8. *It is recommended that the deflection electrode resistance be approximately equal.*

OUTLINE

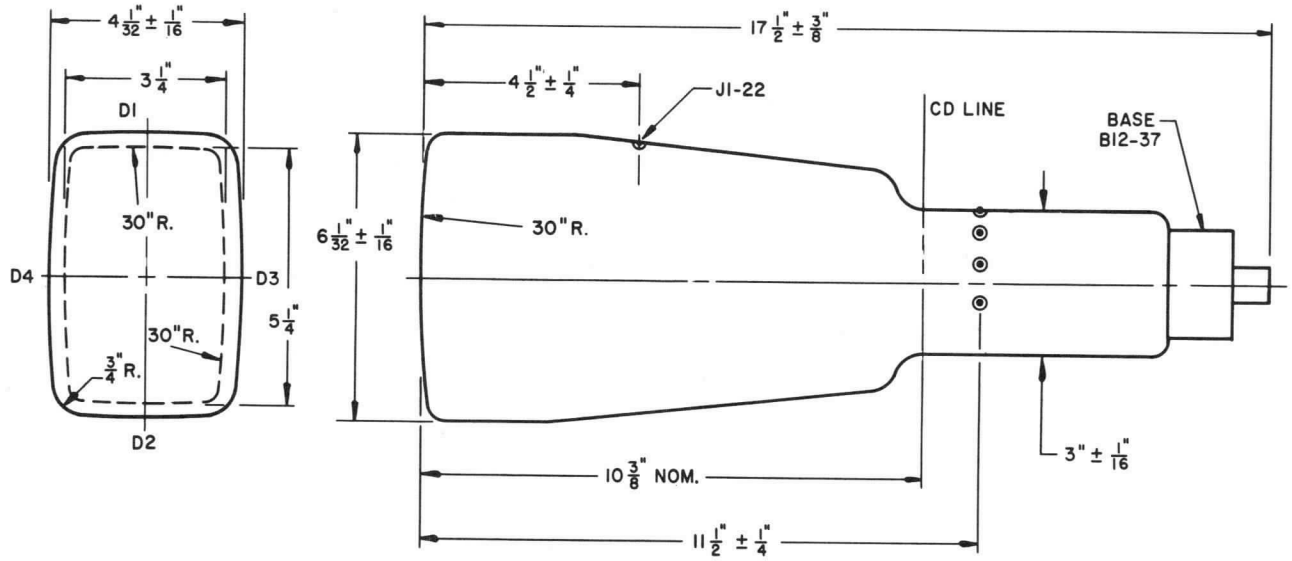

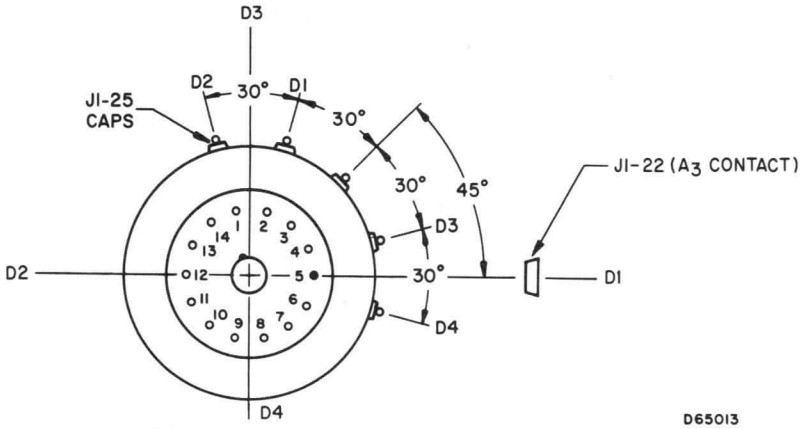

BOTTOM VIEW OF BASE

SYLVANIA

engineering data service

SYLVANIA
7BP2A
7BP-A*

CHARACTERISTICS

GENERAL DATA

Focusing Method	Magnetic
Deflection Method	Magnetic
Deflection Angle (Approx.)	53 Degrees

Types*	7BP2A	7BP7A
Fluorescence	Green	Blue
Phosphorescence	—	Yellow
Persistence	Long	Long
Faceplate	Clear	

**In addition to the types shown, the 7BP-A can be supplied with several other screen phosphors.*

ELECTRICAL DATA

Heater Voltage	6.3 Volts
Heater Current	0.6 ± 10% Ampere
Direct Interelectrode Capacitances (Approx.)	
Cathode to All Other Electrodes	5 μμf
Grid No. 1 to All Other Electrodes	8.5 μμf
Grid No. 2 to All Other Electrodes	7 μμf

MECHANICAL DATA

Minimum Useful Screen Diameter	6 Inches
Bulb	J56R or Equivalent
Bulb Contact (Recessed Small Cavity Cap)	J1-22
Base (Long Medium-Shell Octal 8-Pin)	B8-65
or (Long Medium-Shell Octal 5-Pin)	B5-80
Basing	5AN
Weight (Approx.)	3 Pounds

RATINGS

MAXIMUM RATINGS

Anode Voltage	8,800 Volts	dc
Grid No. 2 Voltage	770 Volts	dc
Grid No. 1 Voltage		
Negative Bias Value	200 Volts	dc
Positive Bias Value[1]	0 Volts	dc
Positive Peak Value	2 Volts	
Peak Heater-Cathode Voltage		
Heater Negative with Respect to Cathode	140 Volts	
Heater Positive with Respect to Cathode	140 Volts	

TYPICAL OPERATING CONDITIONS

Anode Voltage[2]	4000	7000 Volts	dc
Grid No. 2 Voltage	250	250 Volts	dc
Grid No. 1 Voltage for Cutoff[3]	−25 to −70	−25 to −70 Volts	dc
Focusing-Coil Current[4]	75 to 102	99 to 135 Ma	dc
Spot Position		See Note 5	

CIRCUIT VALUES

Grid No. 1 Circuit Resistance	1.5 Megohms Max.

QUICK REFERENCE DATA

Radar Indicator

7″ Direct Viewed

Round Glass Type

Magnetic Deflection

Magnetic Focus

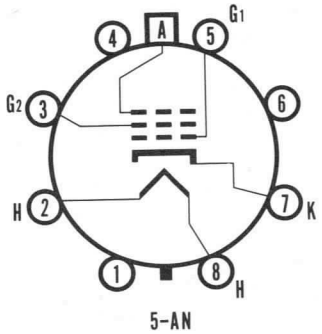

5-AN

SYLVANIA ELECTRONIC TUBES

A Division of
SYLVANIA ELECTRIC PRODUCTS, Inc.

PICTURE TUBE
OPERATIONS
SENECA FALLS, NEW YORK

Prepared and Released By The
TECHNICAL PUBLICATIONS SECTION
EMPORIUM, PENNSYLVANIA

DECEMBER 1958

NOTES:

1. *At or near this rating, the effective resistance of the anode supply should be adequate to limit the anode input power to 6 watts.*
2. *Brilliance and definition decrease with decreasing anode voltage. In general, anode voltage should not be less than 4,000 volts.*
3. *Visual extinction of undeflected focused spot.*
4. *For JETEC Focusing Coil No. 106, or equivalent, with center line of air gap approximately 2¾ inches from reference line (See Outline Drawing) and total anode current of 200 microamperes.*
5. *The center of the undeflected, unfocused spot will fall within a circle having 12 mm radius concentric with the center of the tube face.*

7BP7

Sylvania Type 7BP7A replaces Type 7BP7.

WARNING:

X-ray radiation shielding may be necessary to protect against danger of personal injury from prolonged exposure at close range if this tube is operated at higher than the manufacturer's Maximum Rated Anode Voltage or 16,000 volts, whichever is less.

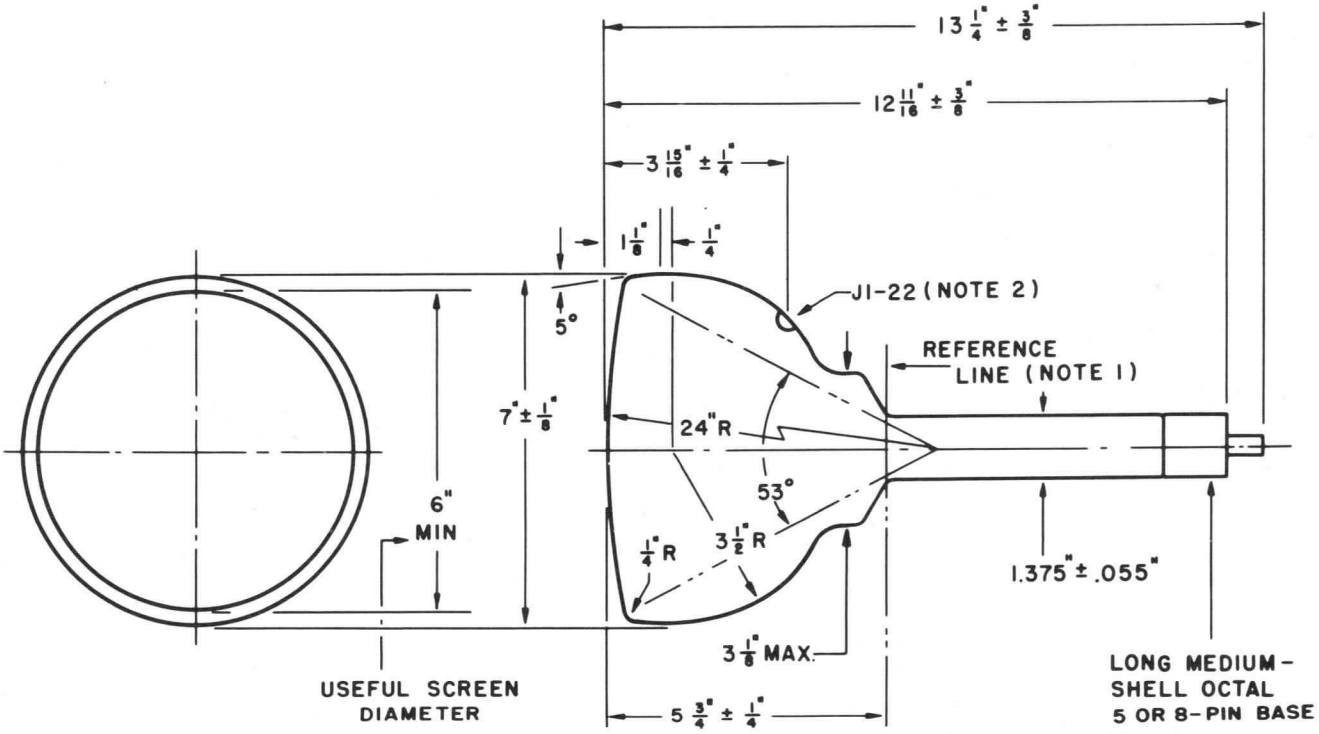

DIAGRAM NOTES:

858011

1. *Reference line is determined by position where gauge 1.430* $^{+\ .003}_{-\ .000}$ *inch I.D. and 2 inches long will seat against the bulb cone.*
2. *The plane through the tube axis and Pin No. 5 may vary from the plane through the tube axis and anode terminal by an angular tolerance (measured about the tube axis) of 10 degrees. Anode terminal is on same side of the tube as Pin No. 5*

SYLVANIA

engineering data service

SYLVANIA

7JP4

7JP1, 7JP7

CHARACTERISTICS

GENERAL DATA

Focusing Method	Electrostatic
Deflecting Method	Electrostatic
Phosphor	P4
Fluorescence	White
Persistence	Medium
Faceplate	Clear

ELECTRICAL DATA

Heater Voltage	6.3 Volts
Heater Current (approx.)	0.6 Ampere
Direct Interelectrode Capacitances (approx.)	
Cathode to All Other Electrodes	5.0 $\mu\mu$f
Grid No. 1 to All Other Electrodes	6.0 $\mu\mu$f
Between Vertical Deflecting Plates	3.0 $\mu\mu$f
Between Horizontal Deflecting Plates	2.0 $\mu\mu$f
Either Vertical Deflecting Plate to All Other Electrodes Except Other Vertical Plate	6.0 $\mu\mu$f
Either Horizontal Deflecting Plate to All Other Electrodes Except Other Horizontal Plate	5.0 $\mu\mu$f

MECHANICAL DATA

Minimum Useful Screen Dimension (Diameter)	6 Inches
Base (Medium Shell Diheptal 12-Pin)	B12-37
Basing	14R

RATINGS

MAXIMUM RATINGS (Design Center Values)

Anode Voltage	6,000 Volts dc
Focusing Anode Voltage	2,800 Volts dc
Grid No. 1 Voltage	
Negative Bias Value	200 Volts dc
Positive Bias Value	0 Volts dc
Positive Peak Value	2 Volts
Heater Negative with Respect to Cathode	
During Warm-up Period Not to Exceed 15 Seconds	410 Volts dc
After Equipment Warm-up Period	125 Volts dc
Heater Positive with Respect to Cathode	125 Volts dc
Peak Voltage Between High Voltage Anode and Any Deflecting Plates	750 Volts

RECOMMENDED OPERATING CONDITIONS

Anode Voltage	6,000 Volts dc
Focusing Anode Voltage	1,620-2,400 Volts dc
Grid No. 1 Voltage Required for Cutoff[1]	-72 to -168 Volts dc
Deflection Factor	
Vertical Plates[2]	216 Volts dc/Inch
Horizontal Plates[3]	177 Volts dc/Inch

CIRCUIT VALUES

Grid No. 1 Circuit Resistance	1.5 Megohms Max.
Deflection Circuit Resistance	5.0 Megohms Max.

QUICK REFERENCE DATA

Television Picture Tube
7" Direct Viewed
Round Glass Type
Electrostatic Deflection
Electrostatic Focus

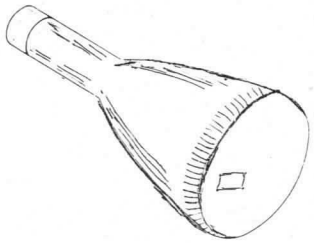

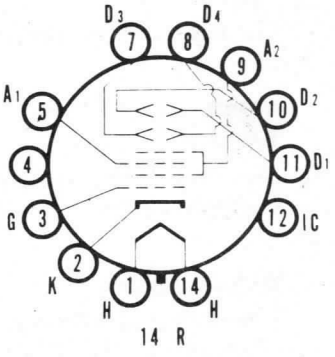

SYLVANIA ELECTRIC PRODUCTS INC.

Prepared and Released By The TECHNICAL PUBLICATIONS SECTION EMPORIUM, PENNSYLVANIA

JULY 1953

NOTES:

1. *Visual extinction of undeflected focused spot.*
2. *Pins 10 and 11.*
3. *Pins 7 and 8.*

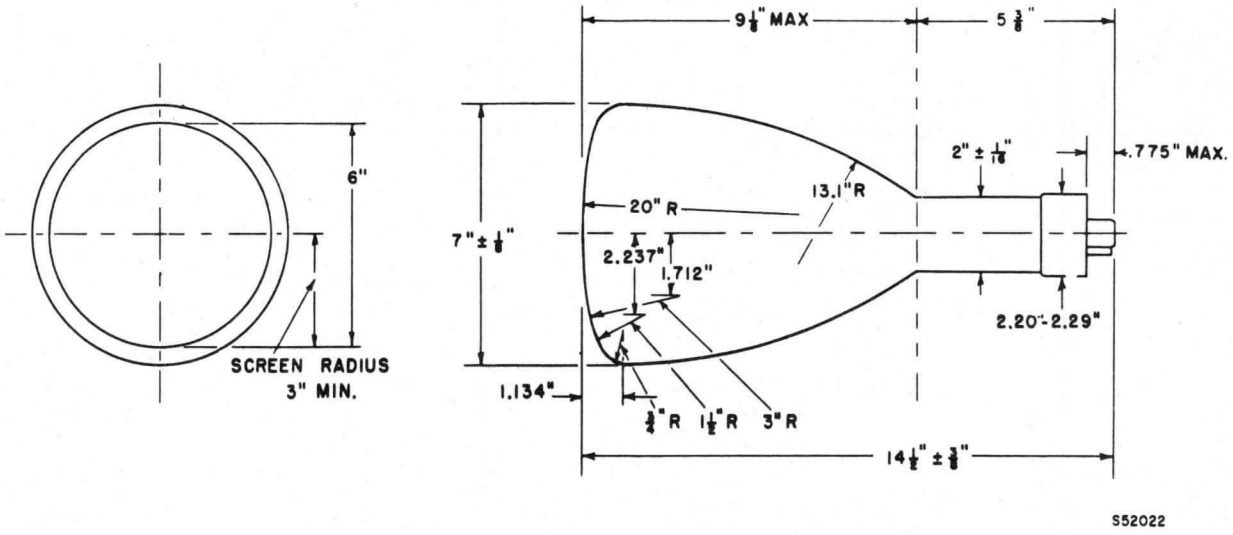

DIAGRAM NOTES:

1. *The screen diameter for Type 7JP7 is 5½ inches.*

7JP1

The Type 7JP1 is identical to the Type 7JP4 except it has a green phosphor.

7JP7

The Type 7JP7 is identical to the Type 7JP4 except it has a blue-white, long persistence phosphor and a screen diameter of 5½ inches.

WARNING:

X-ray radiation shielding may be necessary to protect against possible danger of personal injury from prolonged exposure at close range if this tube is operated at higher than the manufacturer's Maximum Rated Anode Voltage or 16,000 volts, whichever is less.

CHARACTERISTICS

GENERAL DATA

Focusing Method		Magnetic	
Deflection Method		Magnetic	
Deflection Angle (Approx.)		50	Degrees
Types*	**7MP7**	**7MP14**	
Fluorescence	Blue	Purple	
Phosphorescence	Yellow	Orange	
Persistence	Long	Medium-Long	
Faceplate			Clear

**In addition to the types shown, the 7MP- can be supplied with several other screen phosphors.*

ELECTRICAL DATA

Heater Voltage	6.3	Volts
Heater Current	0.6 ± 10%	Ampere
Direct Interelectrode Capacitances (Approx.)		
Cathode to All Other Electrodes	5	$\mu\mu$f
Grid No. 1 to All Other Electrodes	6	$\mu\mu$f

MECHANICAL DATA

Minimum Useful Screen Diameter	6	Inches
Bulb	J57½C or J57½D	
Bulb Contact (Recessed Small Cavity Cap)	J1-21	
Base (Small Shell Duodecal 5-Pin)	B5-57	
Basing	12D	
Weight (Approx.)	3½	Pounds

RATINGS

MAXIMUM RATINGS (Absolute Maximum Values)

Anode Voltage	8,800	Volts	dc
Grid No. 2 Voltage	770	Volts	dc
Grid No. 1 Voltage			
Negative Bias Value	200	Volts	dc
Positive Bias Value[1]	0	Volts	dc
Positive Peak Value	2	Volts	
Peak Heater-Cathode Voltage			
Heater Negative with Respect to Cathode	140	Volts	
Heater Positive with Respect to Cathode	140	Volts	

TYPICAL OPERATING CONDITIONS

Anode Voltage[2]	4000	7000	Volts	dc
Grid No. 2 Voltage	250	250	Volts	dc
Grid No. 1 Voltage for Cutoff[3]	−27 to −63	−27 to −63	Volts	dc
Focusing Coil Current[4]	64 + 15%	85 ± 15%	Ma	
Spot Position		See Note 5		

CIRCUIT VALUES

Grid No. 1 Circuit Resistance	1.5	Megohms Max.

QUICK REFERENCE DATA

Radar Indicator

7" Direct Viewed

Round Glass Type

Magnetic Focus

Magnetic Deflection

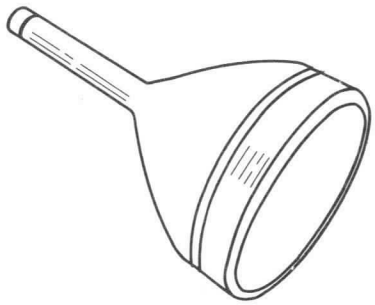

153003

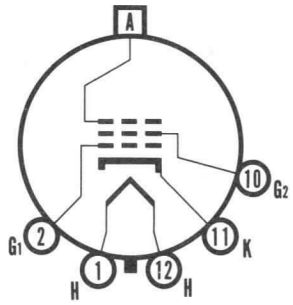

12-D

SYLVANIA ELECTRONIC TUBES

A Division of
SYLVANIA ELECTRIC PRODUCTS, Inc.

PICTURE TUBE
OPERATIONS
SENECA FALLS, NEW YORK

Prepared and Released By The
TECHNICAL PUBLICATIONS SECTION
EMPORIUM, PENNSYLVANIA

DECEMBER 1958

NOTES:

1. *At or near this rating, the effective resistance of the anode supply should be adequate to limit the anode input power to 6 watts.*
2. *Brilliance and definition decrease with decreasing anode voltage. In general, anode voltage should not be less than 4,000 volts.*
3. *Visual extinction of undeflected focused spot.*
4. *For JETEC Focusing Coil No. 109 positioned with air gap toward faceplate and center line of air gap 2¾ inches from reference line (See Outline Drawing) and anode current of 200 microamperes.*
5. *The center of the undeflected unfocused spot will fall within a circle having a 12 mm radius concentric with the center of the tube face.*

WARNING:

X-ray radiation shielding may be necessary to protect against danger of personal injury from prolonged exposure at close range if this tube is operated at higher than the manufacturer's Maximum Rated Anode Voltage or 16,000 volts, which ever is less.

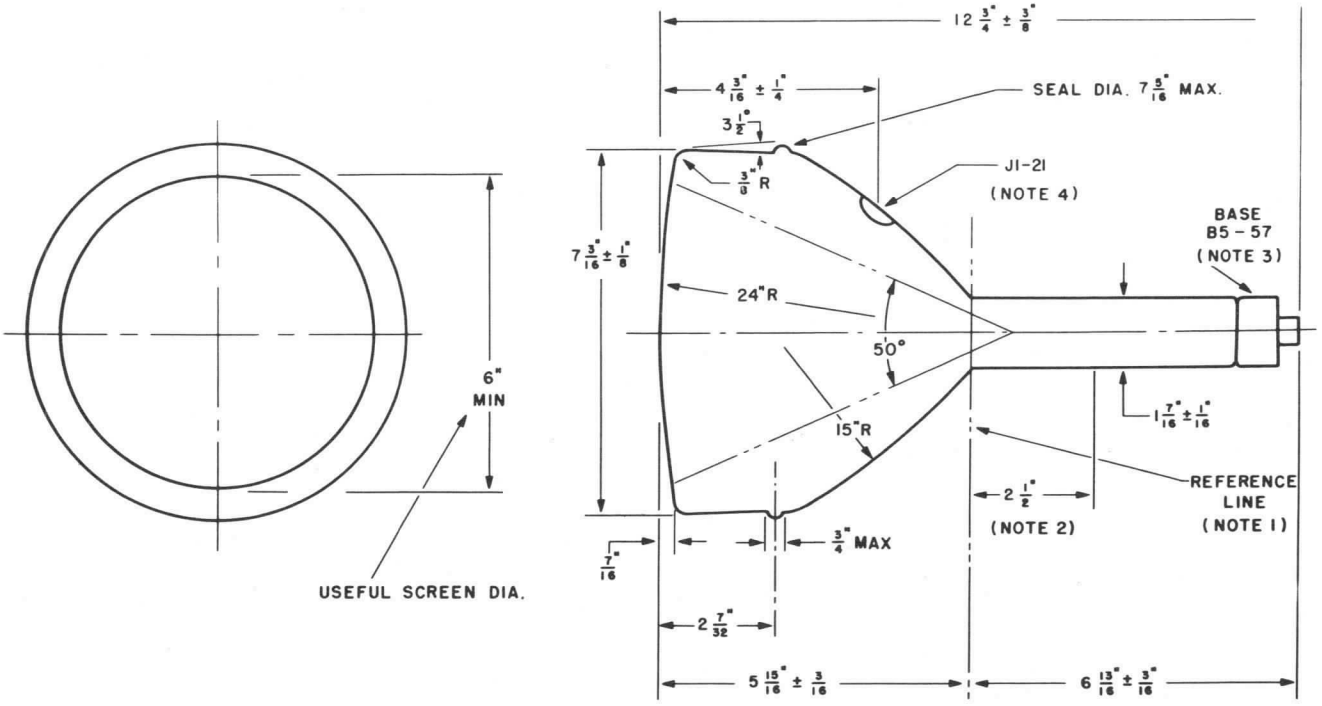

SS8016

DIAGRAM NOTES:

1. *Reference line is determined by position where reference line gauge (JETEC No. 112) 1.500 inches* $^{+\ .003}_{-\ .000}$ *inches I.D. and 2 inches long will seat on bulb cone.*
2. *Location of deflection yoke must be within this space.*
3. *Socket for this base should not be rigidly mounted: It should have flexible leads and be allowed to move freely. Bottom circumference of base shell will fall within circle concentric with bulb axis and having diameter of 1⅞ inches.*
4. *The plane through the tube axis and vacant pin position No. 3 may vary from the plane through the tube axis and bulb terminal by an angular tolerance (measured about the tube axis) of ±10 Degrees. Bulb terminal is on the same side as vacant pin position No. 3.*

CHARACTERISTICS

GENERAL DATA

Focusing Method	Magnetic	
Deflection Method	Magnetic	
Deflection Angle (Approx.)	53 Degrees	
Types*	7UP7 7UP7A	7UP25
Fluorescence	Blue-White	Orange
Phosphorescence	Yellow	Orange
Persistence	Long	Long
Faceplate	Clear, Spherical	
Screen	Aluminized	

**In addition to the types shown, the 7UP- and 7UP-A can be supplied with several other screen phosphors.*

ELECTRICAL DATA

Heater Voltage	6.3 Volts
Heater Current	0.6 ± 10 % Ampere
Direct Interelectrode Capacitances (Approx.)	
Cathode to All Other Electrodes	5 μμf
Grid No. 1 to All Other Electrodes	8.5 μμf

MECHANICAL DATA

Minimum Useful Screen Diameter	6 Inches
Bulb	J56R
Bulb Contact (Recessed Small Cavity Cap)	J1-21
Base (Long Medium-Shell Octal)	B8-65
Basing	5AN
Anode Contact Aligns with Pin No. 5	±10 Degrees
Weight	2¾ Pounds

MAXIMUM RATINGS (Absolute Maximum Values)

Anode Voltage[1]	13,200 Volts	dc
Grid No. 2 Voltage	770 Volts	dc
Grid No. 1 Voltage		
Negative Bias Value	200 Volts	dc
Positive Bias Value	0 Volts	dc
Positive Peak Value	2 Volts	
Peak Heater-Cathode Voltage		
Heater Negative with Respect to Cathode	200 Volts	
Heater Positive with Respect to Cathode	200 Volts	

TYPICAL OPERATING CONDITIONS

Anode Voltage[2]	7000 Volts	dc
Grid No. 2 Voltage	250 Volts	dc
Grid No. 1 Voltage Required for Cutoff[3]	−25 to −70 Volts	dc
Focusing Coil Current (Approx.)[4]	115 Ma	dc
Line Width[5]		
7UP7, at Ia = 200 μa	0.50 mm	
7UP7A, at Ia = 200 μa	0.28 mm	
7UP25, at Ia = 35 μa	0.20 mm	
Spot Position[6]	12 mm	

CIRCUIT VALUES

Grid No. 1 Circuit Resistance	1.5 Megohms Max.

QUICK REFERENCE DATA

7″ Direct Viewed
Round Glass Type
Spherical Faceplate
Aluminized Screen
Magnetic Deflection
Magnetic Focus
No Ion Trap
7UP-A and 7UP25 have high resolution gun.

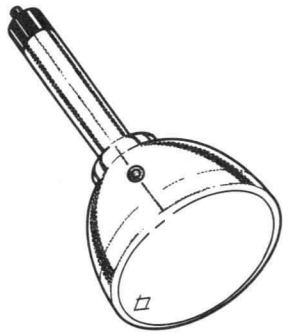

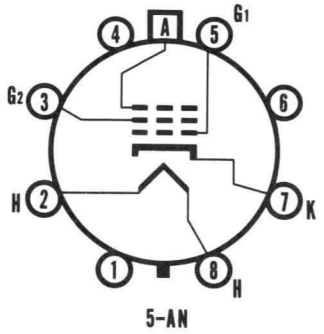

5-AN

SYLVANIA
ELECTRONIC TUBES

A Division of
Sylvania Electric Products Inc.

PICTURE TUBE
OPERATIONS

SENECA FALLS, NEW YORK

Prepared and Released By The
TECHNICAL PUBLICATIONS SECTION
EMPORIUM, PENNSYLVANIA

MARCH, 1963

File Under
SPECIAL AND GENERAL
PURPOSE CATHODE RAY TUBES

NOTES:

1. *The screen of the 7UP25 may be damaged if the exciting current density exceeds 1.4 μa per square cm.*
2. *Brilliance and definition decrease with decreasing anode voltage. In general, anode voltage should not be less than 5,000 volts.*
3. *Visual extinction of undeflected focused spot.*
4. *For JEDEC focusing coil No. 106 with distance from the yoke reference line to center of air gap equal to 2 ¾ inches.*
5. *Measured in accordance with MIL-E-1.*
6. *The center of the undeflected, unfocused spot will fall within a circle having 12 mm radium concentric with the tube face.*

WARNING:

X-ray radiation shielding may be necessary to protect against possible danger of personal injury from prolonged exposure at close range if this tube is operated at higher than the manufacturer's Maximum Rated Anode Voltage or 16,000 volts, whichever is less.

OUTLINE

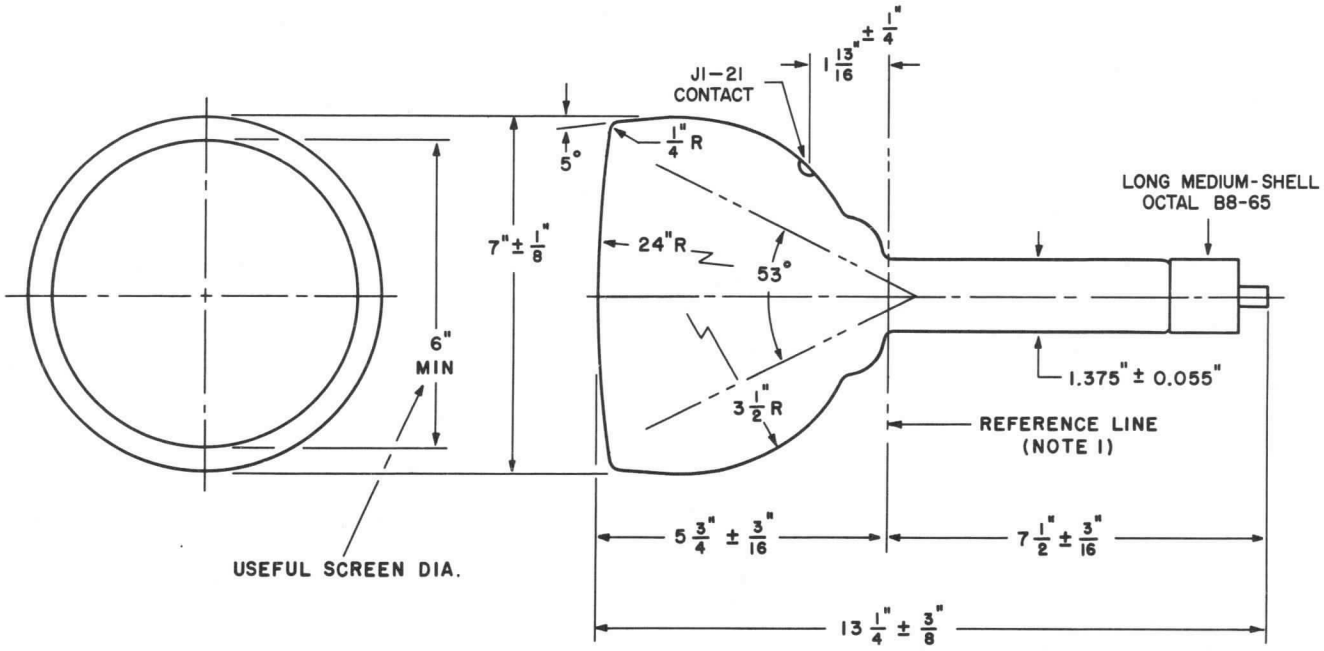

D59020A

DIAGRAM NOTE:

1. *Reference line is determined by the point where a gauge 1.430" +.003" −.000" I.D. and 2" long will stop against the bulb.*

SYLVANIA

engineering data service

SYLVANIA
8CP1
8CP*

CHARACTERISTICS

GENERAL DATA

Focusing Method	Electrostatic
Deflecting Method	Electrostatic

Types*	*Fluorescence*	*Phosphorescence*	*Persistence*
8CP1	Green	—	Medium
8CP2	Blue-Green	Green	Long
8CP4	White	—	Medium
8CP5	Blue	—	Veryshort
8CP7	Blue	Yellow	Long
8CP11	Blue	—	Short

**In addition to the types shown, the 8CP- can be supplied with several other screen phosphors.*

ELECTRICAL DATA

Heater Voltage	6.3 Volts
Heater Current	0.6 ± 10% Amperes
Direct Interelectrode Capacitances (Approx.)	
Cathode to All Other Electrodes	10 μμf
Grid No. 1 to All Other Electrodes	8 μμf
Between Deflecting Plates 1-2[1]	4 μμf
Between Deflecting Plates 3-4[1]	2 μμf
Deflecting Plate 1 to All Other Electrodes Except DP2	8 μμf
Deflecting Plate 2 to All Other Electrodes Except DP1	8 μμf
Deflecting Plate 3 to All Other Electrodes Except DP4	6 μμf
Deflecting Plate 4 to All Other Electrodes Except DP3	6 μμf

MECHANICAL DATA

Minimum Useful Screen Diameter	7½ Inches
Bulb Contact (Recessed Small Ball)	J1-22
Base (Medium Shell Diheptal 12-Pin)	B12-37
Basing	14J
Base alignment D1-D2 trace aligns with Pin No. 5 and No. 12	±10 Degrees

Positive voltage on D1 deflects beam toward Pin No. 5
Positive voltage on D3 deflects beam toward Pin No. 2

RATINGS

MAXIMUM RATINGS (Absolute Maximum Values)

Anode No. 3 Voltage	6,600 Volts	dc
Anode No. 2 Voltage	6,600 Volts	dc
Ratio of Anode No. 3 Voltage to Anode No. 2 Voltage	2.3:1 Volts	dc
Anode No. 1 Voltage	2,750 Volts	dc
Grid No. 1 Voltage		
Negative Bias Value	220 Volts	dc
Positive Bias Value	0	
Positive Peak Value	2 Volts	
Peak Heater Cathode Voltage		
Heater Negative with Respect to Cathode	140 Volts	
Heater Positive with Respect to Cathode	140 Volts	
Peak Voltage Between Anode No. 2 And Any Deflecting Plate	550 Volts	

QUICK REFERENCE DATA

Special Purpose Tube
8" Direct Viewed
Round Glass Type
Electrostatic Deflection
Electrostatic Focus
Post Deflection Accelerator

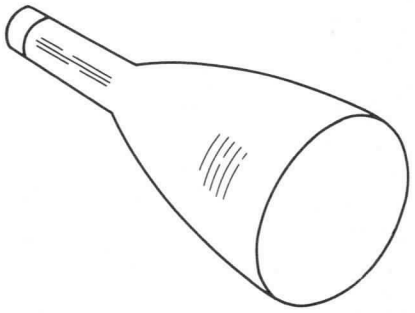

153006

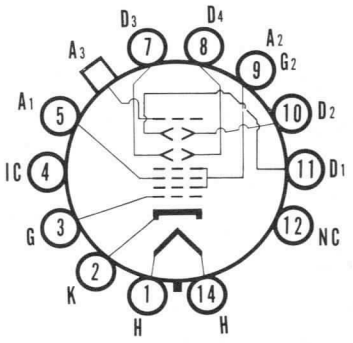

14-J

SYLVANIA
ELECTRONIC TUBES
A Division of
Sylvania Electric Products Inc.
PICTURE TUBE OPERATIONS
SENECA FALLS, NEW YORK

Prepared and Released By The
TECHNICAL PUBLICATIONS SECTION
EMPORIUM, PENNSYLVANIA

NOVEMBER, 1958

TYPICAL OPERATING CONDITIONS

Anode No. 3 Voltage	4,000 Volts dc
Anode No. 2 Voltage	2,000 Volts dc
Anode No. 1 Voltage	540 to 800 Volts dc
Grid No. 1 Voltage Required for Cutoff[2]	−24 to −56 Volts dc
Deflection Factor	
Deflecting Plates 1-2	58 to 81 Volts dc/Inch
Deflecting Plates 3-4	49 to 68 Volts dc/Inch

CIRCUIT VALUES

Grid No. 1 Circuit Resistance	1.5 Megohms Max.
Deflection Circuit Resistance	5.0 Megohms Max.

NOTES:

1. *Deflecting Plate 1 is Pin No. 11*
   Deflecting Plate 2 is Pin No. 10
   Deflecting Plate 3 is Pin No. 7
   Deflecting Plate 4 is Pin No. 8
2. *Visual extinction of undeflected spot.*

WARNING:

X-ray radiation shielding may be necessary to protect against possible danger of personal injury from prolonged exposure at close range if this tube is operated at higher than the manufacturer's Maximum Rated Anode Voltage or 16,000 volts, whichever is less.

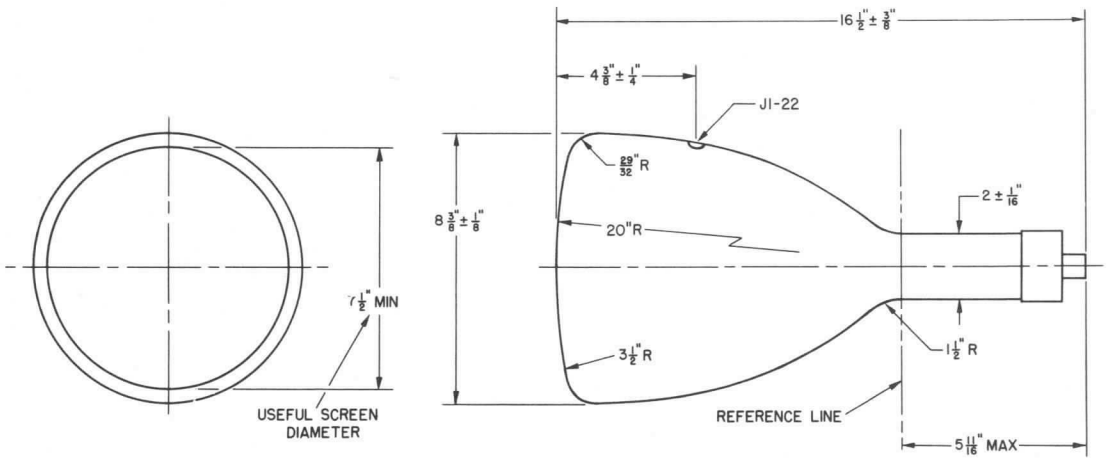

CHARACTERISTICS

GENERAL DATA

Focusing Method	Magnetic
Deflection Method	Magnetic
Deflection Angles (approx.)	
Vertical	68 Degrees
Horizontal	85 Degrees
Diagonal	90 Degrees
Phosphor	Aluminized P4
Fluorescence	White
Persistence	Short to Medium
Faceplate	Gray Filter Glass
Light Transmittance (approx.)	80 Percent

ELECTRICAL DATA

Heater Voltage	6.3 Volts
Heater Current	0.6 ± 5% Ampere
Heater Warm-up time[1]	11 Seconds
Direct Interelectrode Capacitances (approx.)	
Cathode to All Other Electrodes	5 $\mu\mu$f
Grid No. 1 to All Other Electrodes	6 $\mu\mu$f
Ion Trap Magnet	External, Single Field Type

MECHANICAL DATA

Minimum Useful Screen Dimensions	7-3/16 x 5-3/8 Inches
Bulb Contact (Recessed Small Cavity Cap)	J1-21
Base (Small Shell Duodecal 5-Pin)	B5-57
Basing	12D
Weight (approx.)	2¼ Pounds

RATINGS

MAXIMUM RATINGS (Absolute-Maximum Values)

Anode Voltage	19,800 Volts	dc
Grid No. 2 Voltage	550 Volts	dc
Grid No. 1 Voltage		
Negative Bias Value	155 Volts	dc
Negative Peak Value	220 Volts	
Positive Bias Value	0 Volts	dc
Positive Peak Value	2 Volts	
Peak Heater-Cathode Voltage		
Heater Negative with Respect to Cathode		
During Warm-up Period not to Exceed 15 Seconds	450 Volts	
After Equipment Warm-up period	200 Volts	
Heater Positive with Respect to Cathode	200 Volts	

TYPICAL OPERATING CONDITIONS

Anode Voltage	16,000 Volts	dc
Grid No. 2 (and Grid No. 4) Voltage	300 Volts	dc
Grid No. 1 Voltage Required for Cutoff[2]	−35 to −72 Volts	dc
Focusing Coil Current[3]	125 ± 15% Ma	dc
Ion Trap Magnet Current (Average)[4]	30 Ma	dc
Field Strength of PM Ion Trap Magnet[5]	33 Gausses	Min.

QUICK REFERENCE DATA

Monitor Tube
8″ Rectangular, All Glass
Magnetic Focusing
Ion Trap
90° Magnetic Deflection
Gray Filter Glass
Aluminized Screen

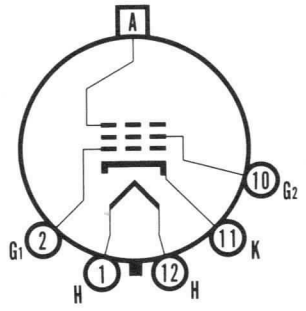

12-D

SYLVANIA ELECTRIC PRODUCTS INC.
TELEVISION PICTURE TUBE DIVISION
SENECA FALLS, NEW YORK

Prepared and Released By The TECHNICAL PUBLICATIONS SECTION EMPORIUM, PENNSYLVANIA

JULY, 1958

CIRCUIT VALUES

Grid No. 1 Circuit Resistance	1.5 Megohms Max.

NOTES:

1. *Heater warm-up time is defined as the time required for the voltage across the heater to reach 80% of the rated heater voltage after applying four (4) times rated heater voltage to a circuit consisting of the tube heater in series with a resistance equal to three (3) times the rated heater voltage divided by the rated heater current.*
2. *Visual extinction of focused raster. Extinction of stationary focused spot will require that these values be about 5 volts more negative.*
3. *For JETEC Focusing Coil No. 109 or equivalent, located with center of air gap 3" from reference line, bias adjusted for 20 ft. L on a 7-3/16" x 5-3/8" picture area, sharply focused at center of screen.*
4. *For JETEC Ion Trap Magnet No. 117, with pole pieces centered over Grid No. 2 on mount and rotated for maximum brightness.*
5. *For typical PM ion trap magnet with field strength tolerance of ±3 gausses.*

WARNING:

X-ray radiation shielding may be necessary to protect against possible danger of personal injury from prolonged exposure at close range if this tube is operated at higher than the manufacturer's Maximum Rated Anode Voltage or 16,000 volts, whichever is less.

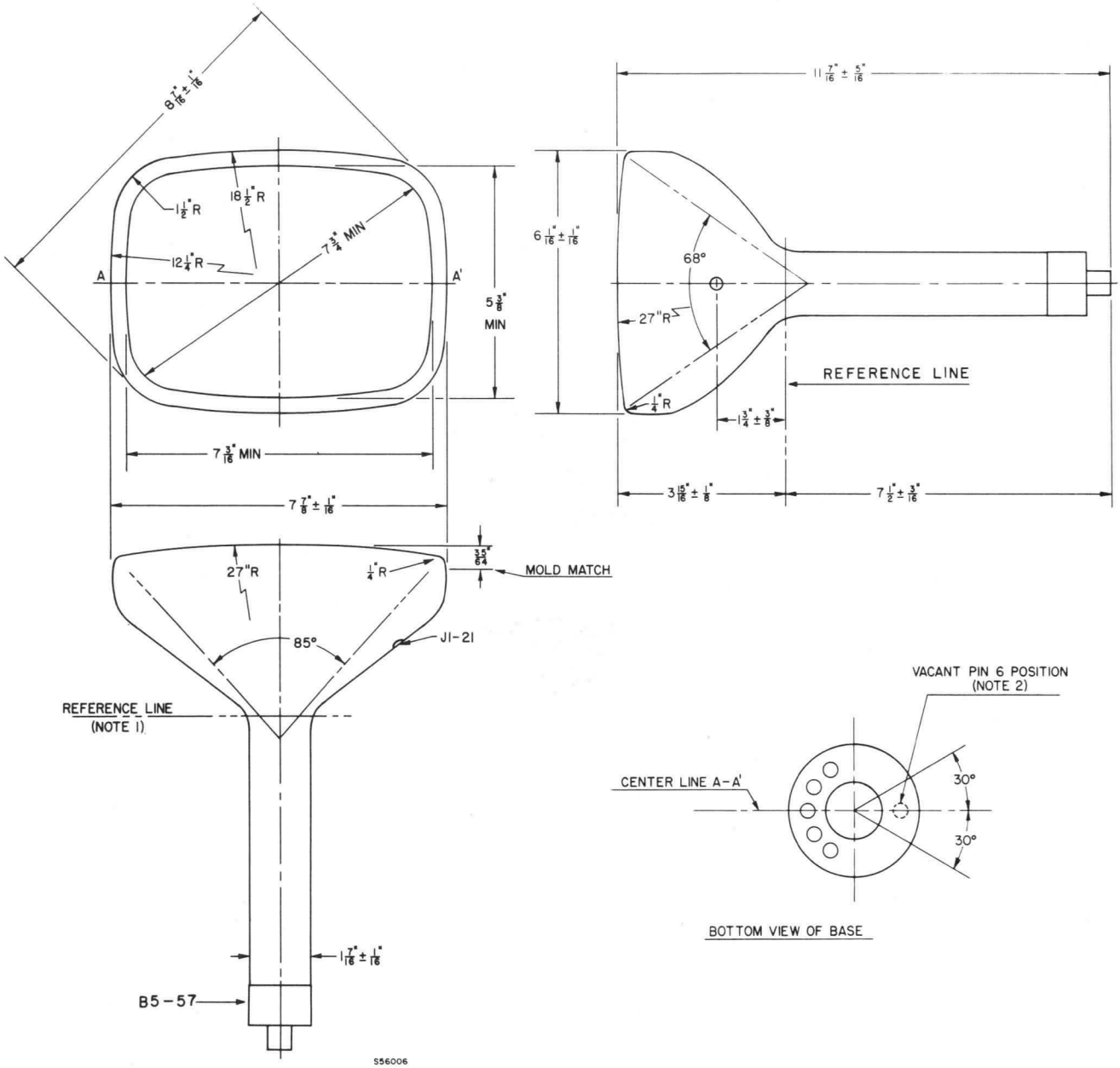

DIAGRAM NOTES:

1. *Reference line is determined by the plan C-C' of the reference line gauge (JETEC No. 116) when the gauge is seated against the glass cone.*
2. *Anode contact aligns with vacant pin position No. 6 ±30 degrees.*

A Technical Publication of
SYLVANIA ELECTRIC
PRODUCTS INC.
EMPORIUM, PA.

CHARACTERISTICS

GENERAL DATA

Focusing Method	Electrostatic
Deflecting Method	Magnetic
Deflection Angles (Approx.)	
Vertical	68 Degrees
Horizontal	85 Degrees
Diagonal	90 Degrees
Phosphor	Aluminized P4
Fluorescence	White
Persistence	Short to Medium
Faceplate	Gray Filter Glass
Light Transmittance (Approx.)	80 Percent

ELECTRICAL DATA

Heater Voltage	6.3 Volts
Heater Current	0.60 ± 10% Ampere
Direct Interelectrode Capacitances (Approx.)	
Cathode to All Other Electrodes	5 $\mu\mu$f
Grid No. 1 to All Other Electrodes	6.5 $\mu\mu$f

MECHANICAL DATA

Minimum Useful Screen Dimensions (Maximum Assured)	7 3/16 x 5 3/8 Inches
Nominal Overall Length	11 15/16 Inches
Nominal Neck Length	8 Inches
Area	35.5 Sq. Inches
Bulb Contact (Recessed Small Cavity Cap)	J1-21
Base (Small Shell Duodecal 6-Pin)	B6-63
Basing	12M

RATINGS

MAXIMUM RATINGS (Absolute Maximum Values)

Anode Voltage	18,000 Volts	dc
Grid No. 4 (Focusing Electrode) Voltage	800 Volts	dc
Grid No. 2 Voltage	700 Volts	dc
Grid No. 1 Voltage		
Negative Bias Value	180 Volts	dc
Positive Bias Value	0 Volts	dc
Positive Peak Value	2 Volts	
Peak Heater-Cathode Voltage		
Heater Negative with Respect to Cathode		
During Warm-up Period not to Exceed 15 Seconds	450 Volts	
After Equipment Warm-up Period	200 Volts	
Heater Positive with Respect to Cathode	200 Volts	

QUICK REFERENCE DATA

Television Monitor Tube
8" Rectangular, All Glass
Electrostatic Focus
No Ion Trap
90° Magnetic Deflection
Gray Filter Glass
Aluminized Screen
High Resolution

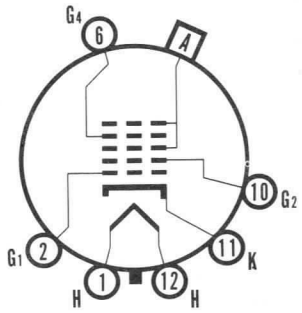

12-M

SYLVANIA
ELECTRONIC TUBES
A Division of
Sylvania Electric Products Inc.
PICTURE TUBE OPERATIONS
SENECA FALLS, NEW YORK

Prepared and Released By The TECHNICAL PUBLICATIONS SECTION EMPORIUM, PENNSYLVANIA

JULY, 1960

File Under
SPECIAL AND GENERAL PURPOSE CATHODE RAY TUBES

TYPICAL OPERATING CONDITIONS

Anode Voltage	16,000 Volts	dc
Grid No. 4 Voltage for Focus	0 to 400 Volts	dc
Grid No. 2 Voltage	300 Volts	dc
Grid No. 1 Voltage Required for Cutoff[1]	−35 to −72 Volts	dc

CIRCUIT VALUES

Grid No. 1 Circuit Resistance	1.5 Megohm Max.

NOTE:

1. *Visual extinction of focused raster. Extinction of stationary focused spot will require that these values be about 5 volts more negative.*

WARNING:

X-ray radiation shielding may be necessary to protect against possible danger of personal injury from prolonged exposure at close range if this tube is operated at higher than the manufacturer's Maximum Rated Anode Voltage or 16,000 volts, whichever is less.

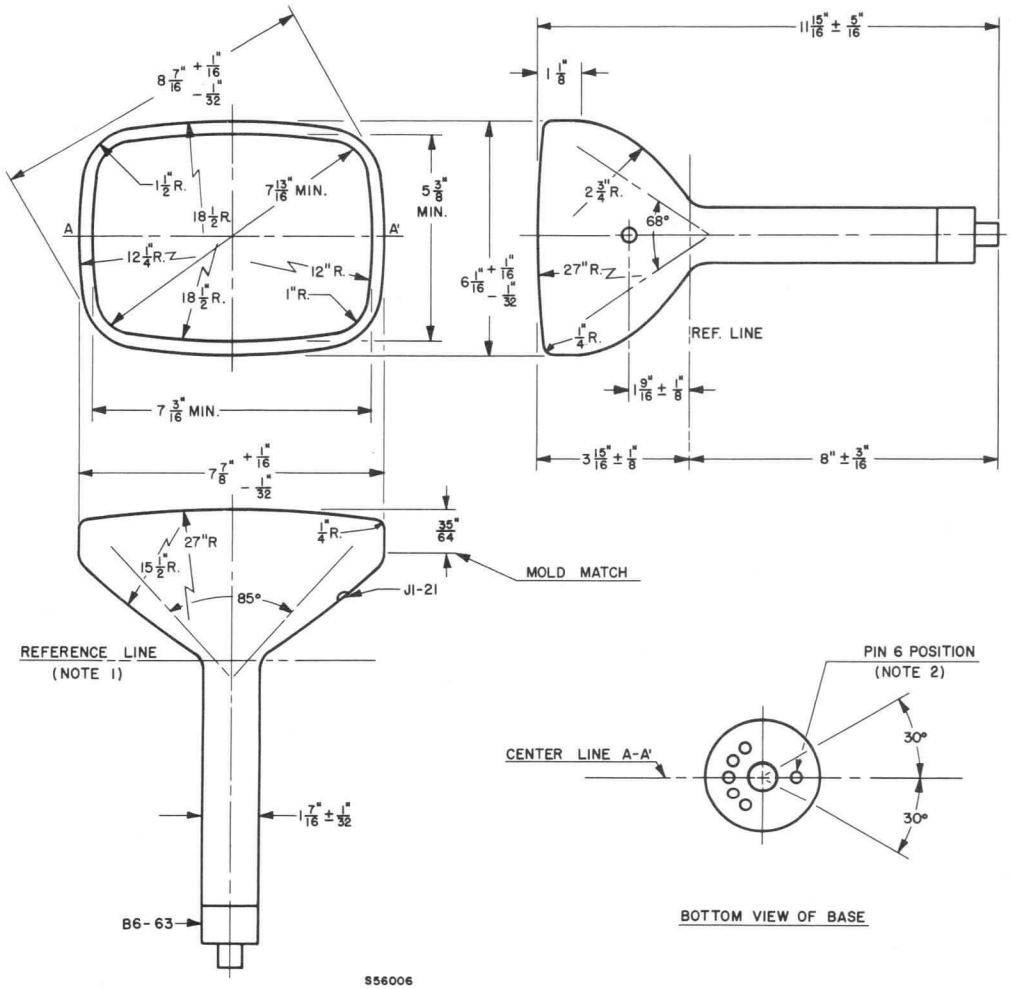

DIAGRAM NOTES:

1. *Reference line is determined by the plane C-C' of JEDEC No. 116 reference line gauge when the gauge is seated against the bulb.*
2. *Base Pine No. 6 aligns with horizontal centerline within 30° and is on same side as anode contact (J1-21).*

CHARACTERISTICS

GENERAL DATA

Focusing Method	Electrostatic
Deflecting Method	Magnetic
Deflection Angles (Approx.)	
Vertical	68 Degrees
Horizontal	85 Degrees
Diagonal	90 Degrees
Phosphor	Aluminized P4
Fluorescence	White
Persistence	Short to Medium
Faceplate	Gray Filter Glass
Light Transmittance of Faceplate and Cover Plate (Approx.)	60 Percent

ELECTRICAL DATA

Heater Voltage	6.3 Volts
Heater Current	0.60 ± 10 % Ampere
Direct Interelectrode Capacitances (Approx.)	
Cathode to All Other Electrodes	5 pf
Grid No. 1 to All Other Electrodes	6 pf

MECHANICAL DATA

Minimum Useful Screen Dimensions (Maximum Assured)	
Height	5 3/8 Inches
Width	7 3/16 Inches
Diagonal	7 3/4 Inches
Area	36 Sq. Inches
Nominal Overall Length	9 15/16 Inches
Nominal Neck Length	5 13/16 Inches
Bulb Contact (Recessed Small Cavity Cap)	J1-21
Base (Small Shell Duodecal 6-Pin)	B6-63
Basing	12M

RATINGS

MAXIMUM RATINGS (Design Maximum Values)

Anode Voltage	18,000 Volts	dc
Grid No. 4 (Focusing Electrode) Voltage		
Positive Value	1100 Volts	dc
Negative Value	550 Volts	dc
Grid No. 2 Voltage	200 to 550 Volts	dc
Grid No. 1 Voltage		
Negative Peak Value	220 Volts	
Negative Bias Value	155 Volts	dc
Positive Bias Value	0 Volt	dc
Positive Peak Value	2 Volts	
Peak Heater-Cathode Voltage		
Heater Negative with Respect to Cathode		
During Warm-up Period Not to Exceed 15 Seconds	450 Volts	
After Equipment Warm-up Period	200 Volts	
Heater Positive with Respect to Cathode		
AC and DC	200 Volts	
DC	100 Volts	

QUICK REFERENCE DATA

Television Monitor Tube
8″ Rectangular, All Glass
Electrostatic Focus
No Ion Trap
90° Magnetic Deflection
Gray Filter Glass
Aluminized Screen
High Resolution
Integral Implosion Cover Plate

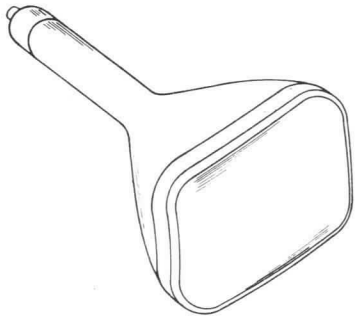

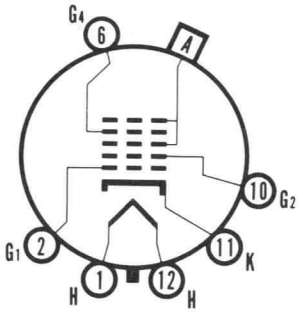

12-M

SYLVANIA ELECTRIC PRODUCTS INC.

Electronic Components Group
ELECTRONIC TUBE DIVISION
SENECA FALLS, NEW YORK

A Technical Publication

MAY, 1965

File Under

SPECIAL AND GENERAL PURPOSE CATHODE RAY TUBES

TYPICAL OPERATING CONDITIONS

Anode Voltage	16,000 Volts	dc
Grid No. 4 Voltage for Focus	0 to 400 Volts	dc
Grid No. 2 Voltage	300 Volts	dc
Grid No. 1 Voltage Required for Cutoff[1]	−28 to −72 Volts	dc

CIRCUIT VALUES

Grid No. 1 Circuit Resistance	1.5 Megohms Max.

NOTE:

1. *Visual extinction of focused raster. Extinction of stationary focused spot will require that these values be about 5 volts more negative.*

WARNING:

X-ray radiation shielding may be necessary to protect against possible danger of personal injury from prolonged exposure at close range if this tube is operated at higher than the manufacturer's Maximum Rated Anode Voltage or 16,000 volts, whichever is less.

OUTLINE

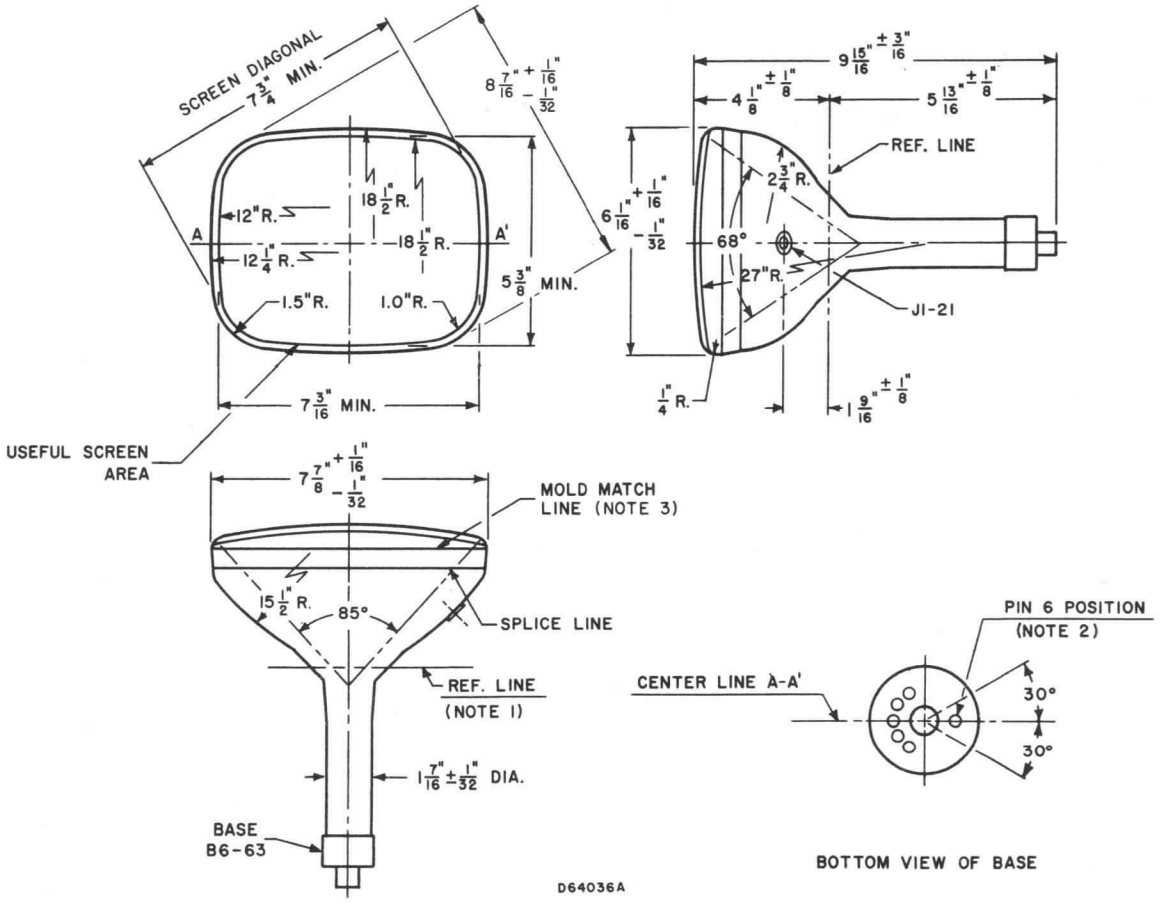

DIAGRAM NOTES:

1. *Reference line is determined by the plane of C-C' of JEDEC No. 116 reference line gauge when the gauge is seated against the bulb.*
2. *Base Pin No. 6 aligns with horizontal centerline within ±30° and is on same side as anode contact (J1-21).*
3. *The maximum radial displacement of the periphery of the coverplate from its exact centered position on the neck axis is .040 Inches.*

CHARACTERISTICS

GENERAL DATA

Focusing Method	Self Focusing (Electrostatic)
Deflecting Method	Magnetic
Deflection Angles (approx.)	
Vertical	68 Degrees
Horizontal	85 Degrees
Diagonal	90 Degrees
Phosphor	P4
Fluorescence	White
Persistence	Short to Medium
Faceplate	Gray Filter Glass
Light Transmittance (approx.)	80 Percent

ELECTRICAL DATA

Heater Voltage	6.3 Volts
Heater Current (approx.)	0.6 Ampere
Direct Interelectrode Capacitances (approx.)	
Cathode to All Other Electrodes	5 μμf
Grid No. 1 to All Other Electrodes	6 μμf

MECHANICAL DATA

Minimum Useful Screen Dimensions	7-3/16 x 5⅜ Inches
Bulb Contact (Recessed Small Cavity Cap)	J1-21
Base (Small Shell Duodecal 5-Pin)	B5-57
Basing	12S

RATINGS

MAXIMUM RATINGS (Absolute Maximum Values)

Anode Voltage	22,000 Volts dc
Grid No. 2 (and Grid No. 4) Voltage	550 Volts dc
Grid No. 1 Voltage	
Negative Bias Value	155 Volts dc
Negative Peak Value	220 Volts
Positive Bias Value	0 Volts dc
Positive Peak Value	2 Volts
Peak Heater-Cathode Voltage	
Heater Negative with Respect to Cathode	
During Warm-up Period not to Exceed 15 Seconds	450 Volts
After Equipment Warm-up Period	200 Volts
Heater Positive with Respect to Cathode	200 Volts

TYPICAL OPERATING CONDITIONS

Anode Voltage	16,000 Volts dc
Grid No. 2 (and Grid No. 4) Voltage	300 Volts dc
Grid No. 1 Voltage Required for Cutoff[1]	−28 to −72 Volts dc

CIRCUIT VALUES

Grid No. 1 Circuit Resistance	1.5 Megohms Max.

NOTE:

1. *Visual extinction of raster.*

QUICK REFERENCE DATA

Receiver Check Tube
8″ Rectangular, All Glass
Self Focusing (Electrostatic)
No Ion Trap
Magnetic Deflection
Gray Filter Glass

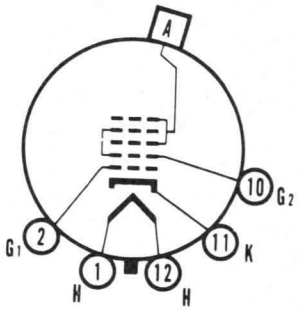

12-S

SYLVANIA ELECTRIC PRODUCTS INC.

TELEVISION PICTURE TUBE DIVISION

SENECA FALLS, NEW YORK

Prepared and Released By The TECHNICAL PUBLICATIONS SECTION EMPORIUM, PENNSYLVANIA

APRIL 1956

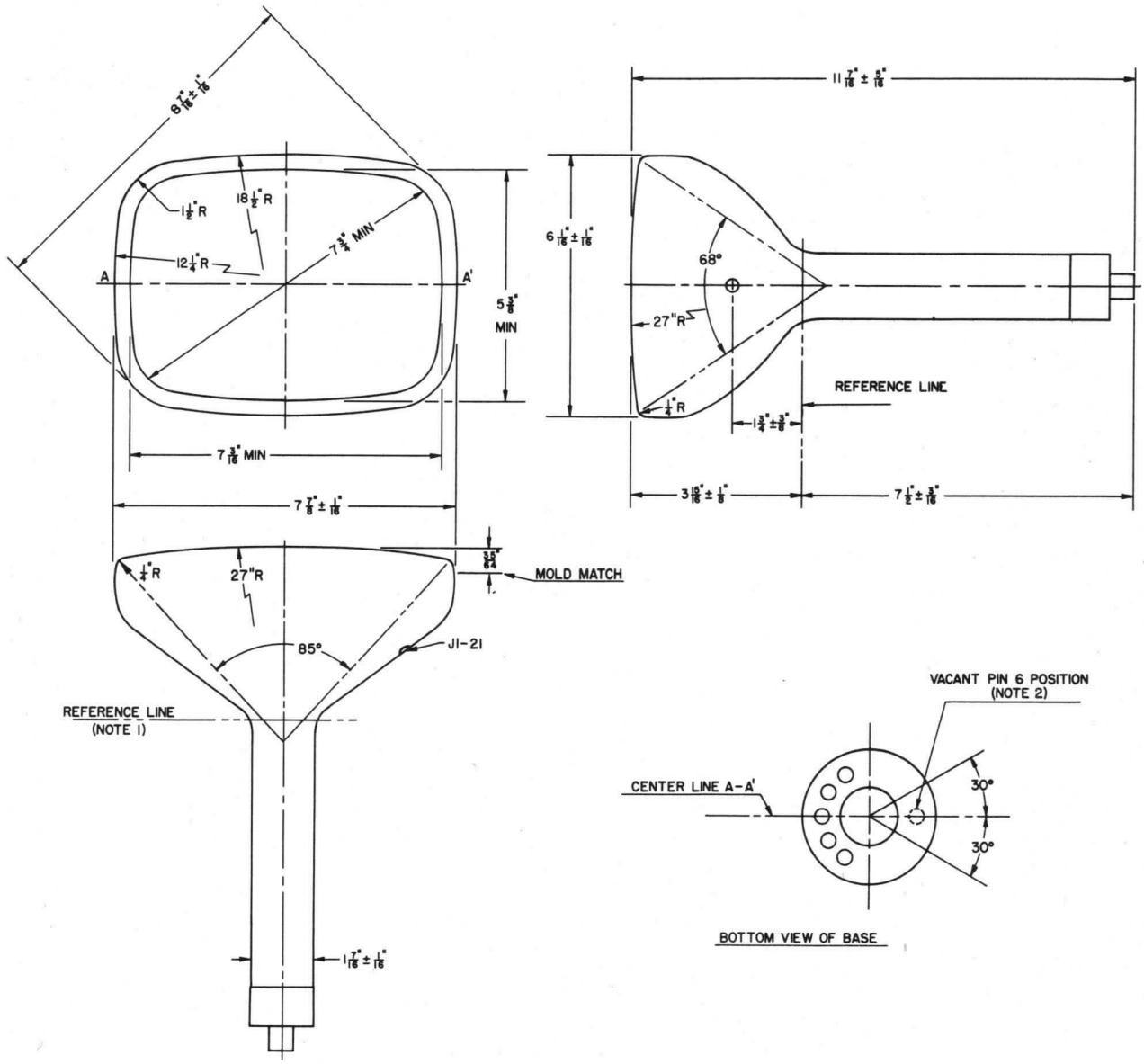

DIAGRAM NOTES:

1. *Reference line is determined by the plane C-C' of the reference line gauge (JETEC No. 116) when the gauge is resting on the glass cone.*

2. *Anode contact aligns with vacant pin position No. 6 ±30 degrees.*

WARNING:

X-ray radiation shielding may be necessary to protect against possible danger of personal injury from prolonged exposure at close range if this tube is operated at higher than the manufacturer's Maximum Rated Anode Voltage or 16,000 volts, whichever is less.

CHARACTERISTICS

GENERAL DATA

Focusing Method	Self Focusing (Electrostatic)	
Deflecting Method	Magnetic	
Deflection Angles (approx.)		
Vertical	87	Degrees
Horizontal	105	Degrees
Diagonal	110	Degrees
Phosphor	P4	
Fluorescence	White	
Persistence	Short to Medium	
Faceplate	Gray Filter Glass	
Light Transmittance (approx.)	80	Percent

ELECTRICAL DATA

Heater Voltage	6.3	Volts
Heater Current (approx.)	0.6	Ampere
Direct Interelectrode Capacitances (approx.)		
Cathode to All Other Electrodes	4	$\mu\mu$f
Grid No. 1 to All Other Electrodes	6	$\mu\mu$f

MECHANICAL DATA

Minimum Useful Screen Dimensions	$7\frac{1}{2}$ x $5\frac{7}{8}$	Inches
Bulb Contact (Recessed Small Cavity Cap)	J1-21	
Base	B6-185	
Basing	7FG	
Weight (approx.)	2	Pounds

RATINGS

MAXIMUM RATINGS (Absolute Maximum Values)

Anode Voltage	22,000	Volts	dc
Grid No. 2 (and Grid No. 4) Voltage	550	Volts	dc
Grid No. 1 Voltage			
Negative Bias Value	155	Volts	dc
Negative Peak Value	220	Volts	
Positive Bias Value	0	Volts	dc
Positive Peak Value	2	Volts	
Peak Heater-Cathode Voltage			
Heater Negative with Respect to Cathode			
During Warm-up Period not to Exceed 15 Seconds	450	Volts	
After Equipment Warm-up Period	200	Volts	
Heater Positive with Respect to Cathode	200	Volts	

TYPICAL OPERATING CONDITIONS

Anode Voltage	16,000	Volts	dc
Grid No. 2 (and Grid No. 4) Voltage	300	Volts	dc
Grid No. 1 Voltage Required for Cutoff[1]	−35 to −72	Volts	dc

CIRCUIT VALUES

Grid No. 1 Circuit Resistance	1.5	Megohms Max.

NOTE:

1. *Visual extinction of raster.*

QUICK REFERENCE DATA

Receiver Check Tube
8″ Rectangular, All Glass
Self Focusing
(Electrostatic)
No Ion Trap
110° Magnetic Deflection
Gray Filter Glass

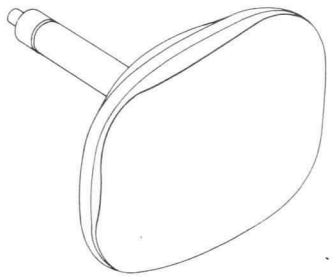

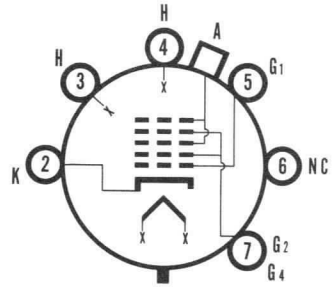

7-FG

SYLVANIA ELECTRIC PRODUCTS INC.
TELEVISION PICTURE TUBE DIVISION
SENECA FALLS, NEW YORK

Prepared and Released By The TECHNICAL PUBLICATIONS SECTION EMPORIUM, PENNSYLVANIA

APRIL, 1958

WARNING:

X-ray radiation shielding may be necessary to protect against possible danger of personal injury from prolonged exposure at close range if this tube is operated at higher than the manufacturer's Maximum Rated Anode Voltage or 16,000 volts, whichever is less.

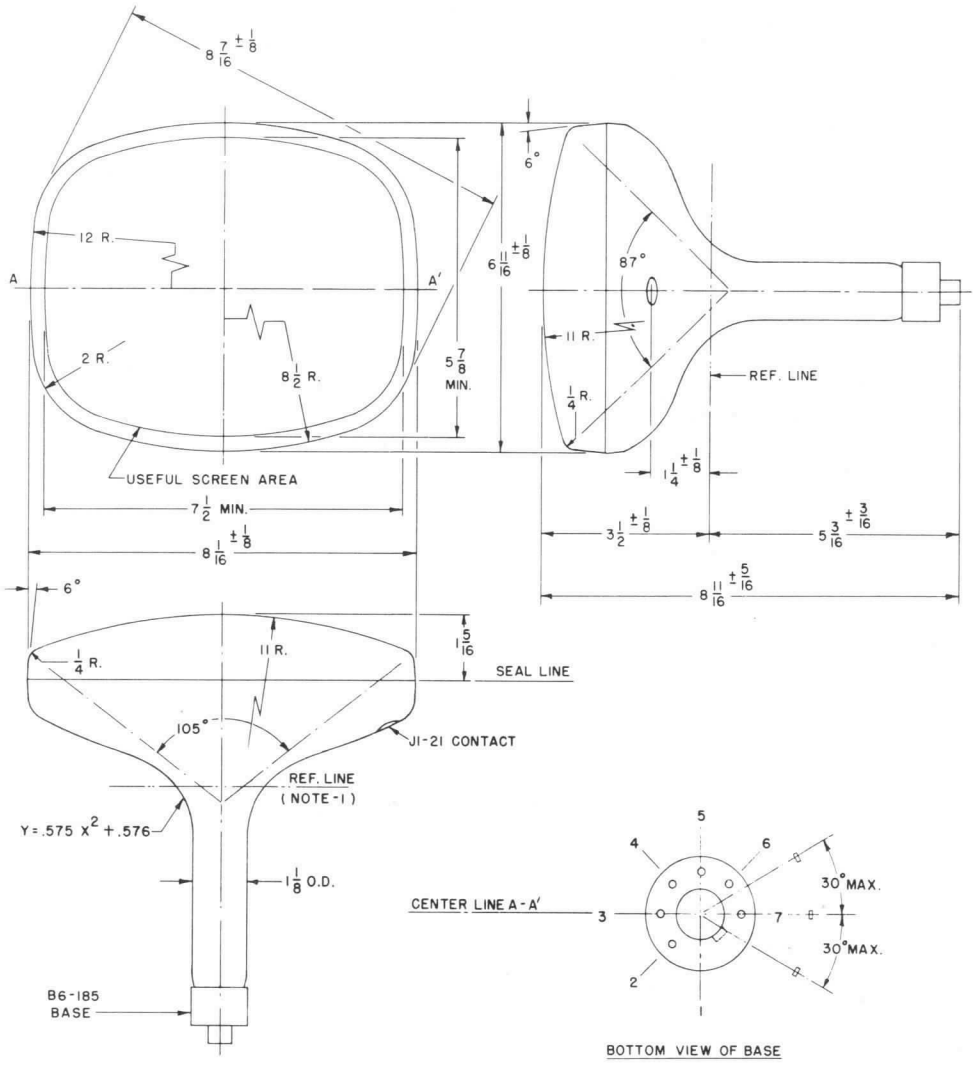

DIAGRAM NOTES:

1. *Reference line is determined by the plane C-C' of JETEC No. 126 reference line gauge when the gauge is seated against the bulb.*
2. *Base Pin No. 7 aligns with horizontal centerline within 30° and is on same side as anode contact (J1-21).*
3. *Dimensions are in inches.*

SYLVANIA

engineering data service

SYLVANIA
10AKP7
10AKP-*

CHARACTERISTICS

GENERAL DATA

Focusing Method	Magnetic
Deflecting Method	Magnetic
Deflection Angle (Approx.)	50 Degrees
Phosphor	Aluminized, P7
Fluorescence	Blue-White
Phosphorescence	Yellow
Persistence	Long
Faceplate	Gray Glass
Light Transmittance (Approx.)	76 Percent

* In addition to the type shown, the 10AKP- can be supplied with several other screen phosphors.

ELECTRICAL DATA

Heater Voltage	6.3 Volts
Heater Current	0.6 ± 10% Ampere
Direct Interelectrode Capacitances (Approx.)	
Cathode to All Other Electrodes	5 $\mu\mu$f
Grid No. 1 to All Other Electrodes	8 $\mu\mu$f

MECHANICAL DATA

Minimum Useful Screen Diameter	9 Inches
Bulb Contact (Recessed Small Cavity Cap)	J1-21
Base	B5-57
Basing	12D
Bulb	J84C

RATINGS

MAXIMUM RATINGS (Absolute Maximum Values)

Anode Voltage	11,000 Volts	dc
Grid No. 2 Voltage	1100 Volts	dc
Grid No. 1 Voltage		
Negative Bias Value	200 Volts	dc
Positive Bias Value	0 Volts	dc
Positive Peak Value	2 Volts	
Peak Grid No. 1 Drive from Cutoff	65 Volts	
Peak Heater-Cathode Voltage		
Heater Negative with Respect to Cathode	200 Volts	
Heater Positive with Respect to Cathode	200 Volts	

TYPICAL OPERATING CONDITIONS

Anode Voltage	8000 Volts	dc
Grid No. 2 Voltage	700 Volts	dc
Grid No. 1 Voltage Required for Cutoff[1]	-35 to -80 Volts	dc
Focusing Coil Current (Approx.)[2]	105 Ma	dc
Linewidth A[3]	.30 mm	Max.
Spot Position (Undeflected)[4]	18 mm	Max.

CIRCUIT VALUES

Grid No. 1 Circuit Resistance	1.5 Megohms Max.

QUICK REFERENCE DATA

Radar Indicator Tube
High Resolution
10" Round Glass Type
Spherical Faceplate
Gray Glass
Aluminized Screen
Magnetic Deflection
Magnetic Focus

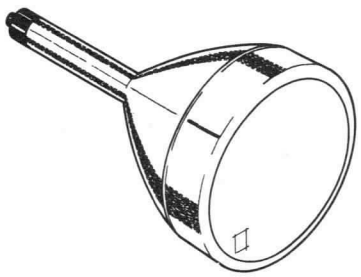

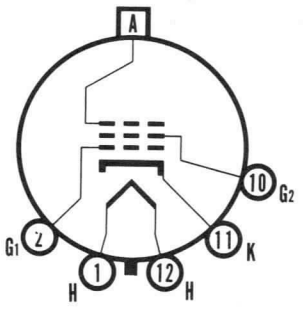

12-D

SYLVANIA
ELECTRONIC TUBES
A Division of
Sylvania Electric Products Inc.
PICTURE TUBE OPERATIONS
SENECA FALLS, NEW YORK

Prepared and Released By The
TECHNICAL PUBLICATIONS SECTION
EMPORIUM, PENNSYLVANIA

MAY, 1961

File Under
SPECIAL AND GENERAL PURPOSE
CATHODE RAY TUBES

NOTES:

1. *Visual extinction of undeflected focused spot.*
2. *For JEDEC focusing coil No. 106 with distance from the yoke reference line to center of air gap equal to 3¼ inches.*
3. *Measured in accordance with Mil-E-1, paragraph 4.12.6.2, at an anode current of 200 μa.*
4. *The center of the undeflected, unfocused spot will fall within a circle of 18 m.m. radius, concentric with the tube face.*

WARNING:

X-ray radiation shielding may be necessary to protect against possible danger of personal injury from prolonged exposure at close range if this tube is operated at higher than the manufacturer's Maximum Rated Anode Voltage or 16,000 volts, whichever is less.

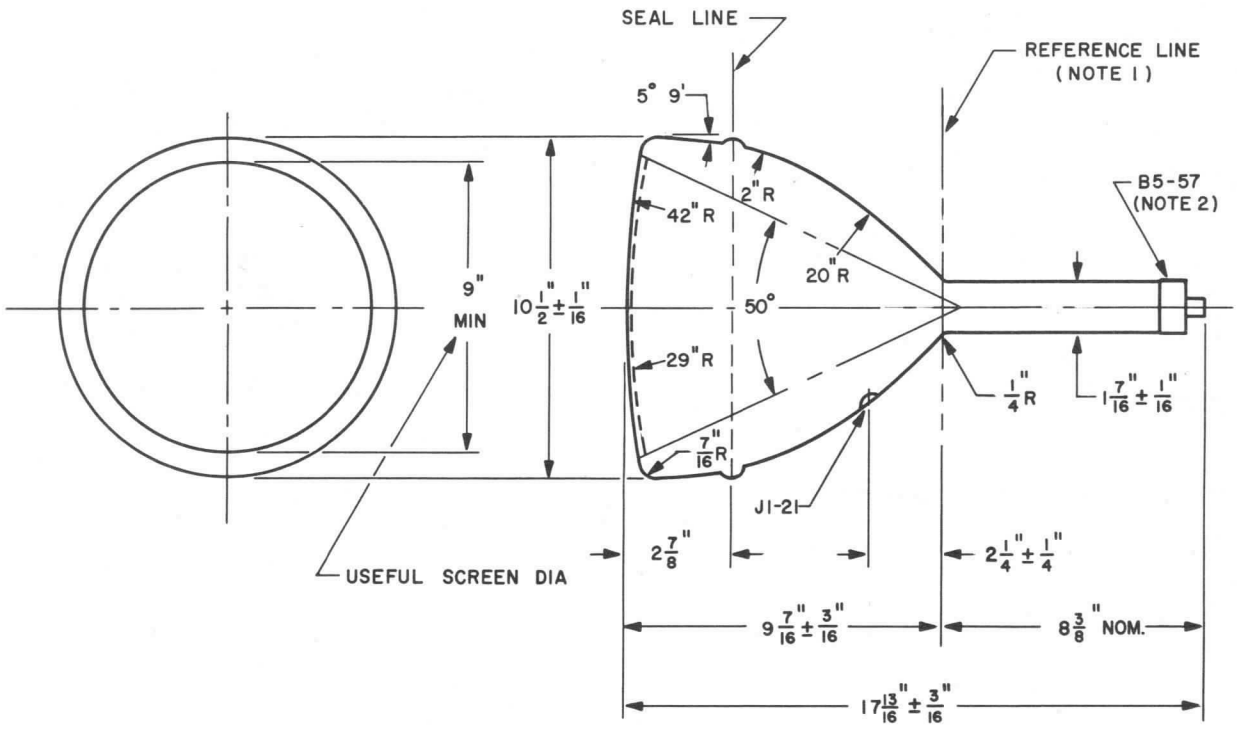

S58059A

DIAGRAM NOTES:

1. *Reference line is determined by position where JEDEC No. 112 reference line gauge will seat against bulb.*
2. *Anode contact (J1-21) aligns with Vacant Pin Position No. 3 within 10 degrees.*

CHARACTERISTICS

GENERAL DATA

Focusing Method	Magnetic
Deflecting Method	Magnetic
Deflection Angle (Approx.)	50 Degrees

Phosphors*	Fluorescence	Phosphorescence	Persistence
P4	White	—	Medium
P7	Blue	Yellow	Long
P16	Violet	—	Extremely Short
P19	Orange	Orange	Long
P25	Orange	Orange	Long

Faceplate . . . . . Gray, Spherical-Aluminized

*In addition to the types shown, the 10ANP– can be supplied with several other screen phosphors.

ELECTRICAL DATA

Heater Voltage	6.3 Volts
Heater Current	0.3 ± 10 % Ampere
Direct Interelectrode Capacitances (Approx.)	
Cathode to All Other Electrodes	5 pf
Grid No. 1 to All Other Electrodes	6 pf
Grid No. 2 to All Other Electrodes	5 pf

MECHANICAL DATA

Minimum Useful Screen Diameter	9 Inches	
Overall Length	16 Inches	Max.
Bulb Contact (Recessed Small Cavity Cap)	J1-21	
Base[1]	E9-37	
Basing	9NB	
Bulb Contact Alignment		
Plane of J1-21 cap passes halfway between Pins No. 1 and No. 9	±10 Degrees	
J1-21 Cap on Same Side as Pins No. 1 and No. 9		

RATINGS

MAXIMUM RATINGS (Design Maximum Values)

Anode Voltage	12,000 Volts	dc
Grid No. 2 Voltage	450 Volts	dc
Grid No. 1 Voltage		
Negative Bias Value	200 Volts	dc
Positive Bias Value	0 Volts	dc
Positive Peak Value	0 Volts	
Peak Heater-Cathode Voltage		
Heater Negative with Respect to Cathode	180 Volts	
Heater Positive with Respect to Cathode	180 Volts	

TYPICAL OPERATING CONDITIONS

Anode Voltage[2]	9000 Volts	dc
Grid No. 2 Voltage	250 Volts	dc
Grid No. 1 Voltage[3]	−15 to −45 Volts	dc
Focusing Coil Current (Approx.)[6]	40 to 60 Ma	dc
Linewidth A[4]	0.013 Inch	Max.
Spot Position (Undeflected)[5]	½ Inch	
Modulation[4]	40 Volts	Max.

CIRCUIT VALUES

Grid No. 1 Circuit Resistance	1.5 Megohms Max.

QUICK REFERENCE DATA

Special Purpose Tube
10″ Round Glass Type
Spherical Faceplate
Gray Glass
Aluminized Screen
Magnetic Deflection
Magnetic Focus
⅞″ Diameter Neck
Miniature Base
6.3 Volts—300 Ma Heater

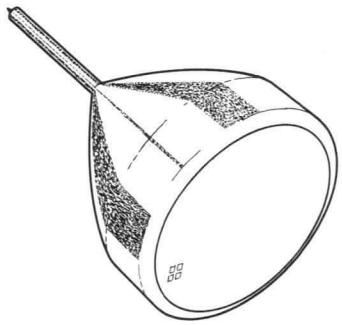

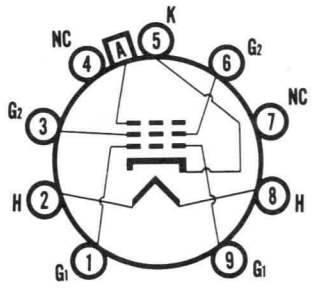

9NB

SYLVANIA ELECTRIC PRODUCTS INC.

Electronic Components Group
ELECTRONIC TUBE DIVISION
SENECA FALLS, NEW YORK

A Technical Publication
JUNE, 1965

File Under
SPECIAL AND GENERAL PURPOSE CATHODE RAY TUBES

NOTES:

1. *A socket with a center opening to clear the tubulation should be used. Care should be taken in handling the tube to avoid damaging the exposed tubulation and bending the base pins.*
2. *Brilliance and definition decrease with decreasing accelerator voltage. In general, accelerator voltage should not be less than 7000 volts.*
3. *Visual extinction of the undeflected focused spot.*
4. *Measured per MIL-E-1 specification at an anode current of 400 μa.*
5. *The center of the undeflected focused spot will fall within a circle of 1/2-inch radius concentric with the center of the tube face with the tube shielded.*
6. *Focusing coil current measured at an accelerator current of 100 μa, with the center of air gap of JEDEC Focus Coil No. 127, or equivalent, located 2-1/2 inches from reference line.*
7. *The P16, P19, and P25 screens can be permanently damaged if current density is permitted to rise too high. To prevent burning, minimum beam current densities should be employed.*

WARNING:

X-ray radiation shielding may be necessary to protect against possible danger of personal injury from prolonged exposure at close range if this tube is operated at higher than the manufacturer's Maximum Rated Anode Voltage or 16,000 volts, whichever is less.

OUTLINE

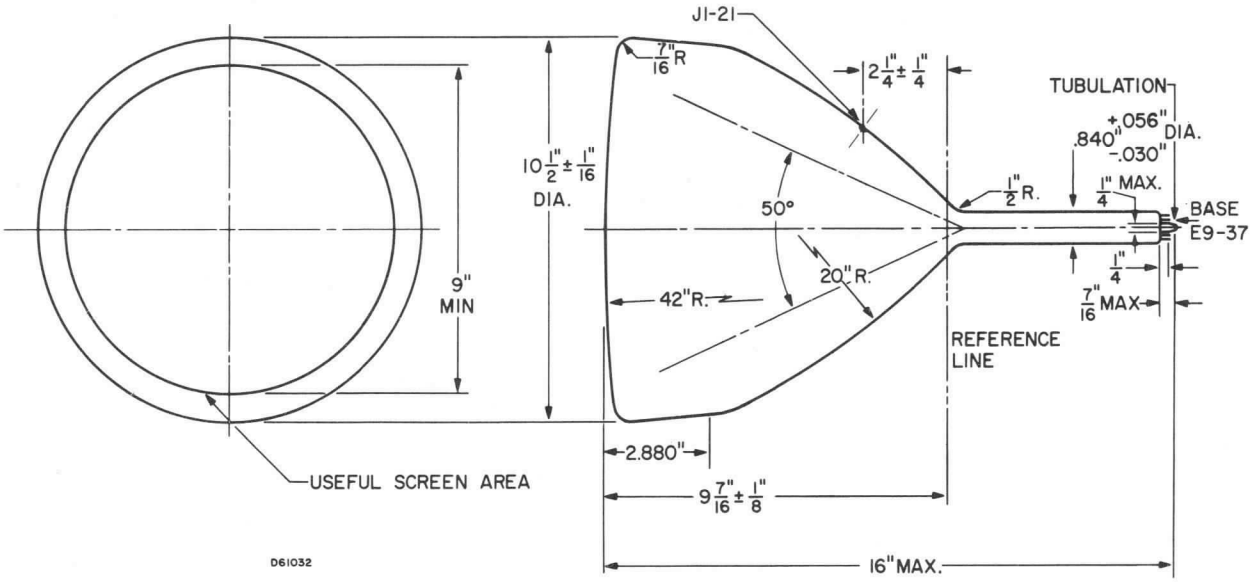

DIAGRAM NOTE:

1. *Reference line is determined by the point where leading edge of JEDEC G-112 reference line gauge (a cylinder 2" long and 1.500" + .003-.000" I.D.) will stop.*

CHARACTERISTICS

GENERAL DATA

Focusing Method	Magnetic
Deflecting Method	Magnetic
Deflection Angle (Approx.)	50 Degrees

Types*	10KP7 10KP7A	10KP7B
Fluorescence	Blue-White	Blue-White
Phosphorescence	Yellow	Yellow
Persistence	Long	Long
Screen	——	Aluminized
Faceplate	Gray Filter Glass	Gray Filter Glass
Light Transmittance (approx.)	77	77

*In addition to the types shown, the 10KP- can be supplied with several other screen phosphors.

ELECTRICAL DATA

Heater Voltage	6.3 Volts
Heater Current	0.6 ± 10% Ampere
Direct Interelectrode Capacitances (approx.)	
Cathode to All Other Electrodes	5 $\mu\mu$f
Grid No. 1 to All Other Electrodes	8 $\mu\mu$f

MECHANICAL DATA

Minimum Useful Screen Diameter	9 Inches
Bulb Contact (Recessed Small Cavity Cap)	J1-21
Bulb	J84C or J84D
Base (Small-Shell Duodecal 5-Pin)	B5-57
Basing	12D
Bulb Contact Aligns with Vacant Pin Position No. 3	±10 Degrees
Weight (approx.)	9 Pounds

RATINGS

MAXIMUM RATINGS (Absolute Maximum Values)

Anode Voltage	
10KP7, 10KP7A	11,000 Volts dc
10KP7B	13,200 Volts dc
Grid No. 2 Voltage	770 Volts dc

QUICK REFERENCE DATA

10" Direct Viewed
Round Glass Type
Spherical, Gray Faceplate
10KP7B, Aluminized Screen
Magnetic Deflection
Magnetic Focus
10KP7A and 10KP7B, High Resolution

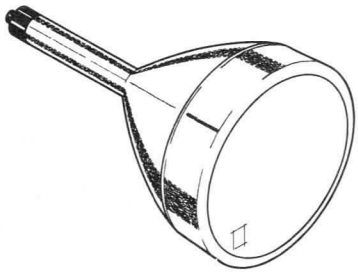

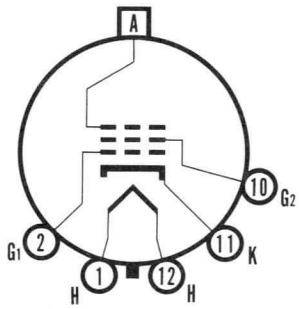

12-D

SYLVANIA
ELECTRONIC TUBES

A Division of
Sylvania Electric Products Inc.

PICTURE TUBE OPERATIONS
SENECA FALLS, NEW YORK

Prepared and Released By The
TECHNICAL PUBLICATIONS SECTION
EMPORIUM, PENNSYLVANIA

MARCH, 1960

File Under
SPECIAL AND GENERAL PURPOSE
CATHODE RAY TUBES

MAXIMUM RATINGS (Absolute Maximum Values) (Cont'd)

Grid No. 1 Voltage				
Negative Bias Value			200 Volts	dc
Positive Bias Value			0 Volts	dc
Positive Peak Value			2 Volts	
Peak Heater Cathode Voltage				
	10KP7	**10KP7A**	**10KP7B**	
Heater Negative with Respect to Cathode	140	200	Volts	
During Warm-up Period not to Exceed 15 Seconds			450 Volts	
After Equipment Warm-up Period			200 Volts	
Heater Positive with Respect to Cathode	140	200	200 Volts	

TYPICAL OPERATING CONDITIONS

Anode Voltage[1]	9000 Volts	dc
Grid No. 2 Voltage	250 Volts	dc
Grid No. 1 Voltage Required for Cutoff[2]	–27 to –63 Volts	dc
Focusing Coil Current (Approx.)[3]	112 ± 15% Ma	dc
Line Width A[4] (10KP7A and 10KP7B)	0.38 mm	Max.

MAXIMUM CIRCUIT VALUES

Grid No. 1 Circuit Resistance	1.5 Megohms Max.

NOTES:

1. *Brilliance and definition decrease with decreasing Anode Voltage. In general, the Anode Voltage should not be less than 7000 volts for Type 10KP7B and not less than 5000 volts for Types 10KP7 and 10KP7A.*
2. *Visual extinction of focused spot.*
3. *For JEDEC focusing coil 106 or equivalent, center of air gap 3¼ inches from Reference Line at an anode current of 200 μa.*
4. *Measured in accordance with MIL-E-1, at an anode current of 200 μa.*

WARNING:

X-ray radiation shielding may be necessary to protect against possible danger of personal injury from prolonged exposure at close range if this tube is operated at higher than the manufacturer's Maximum Rated Anode Voltage or 16,000 volts, whichever is less.

OUTLINE

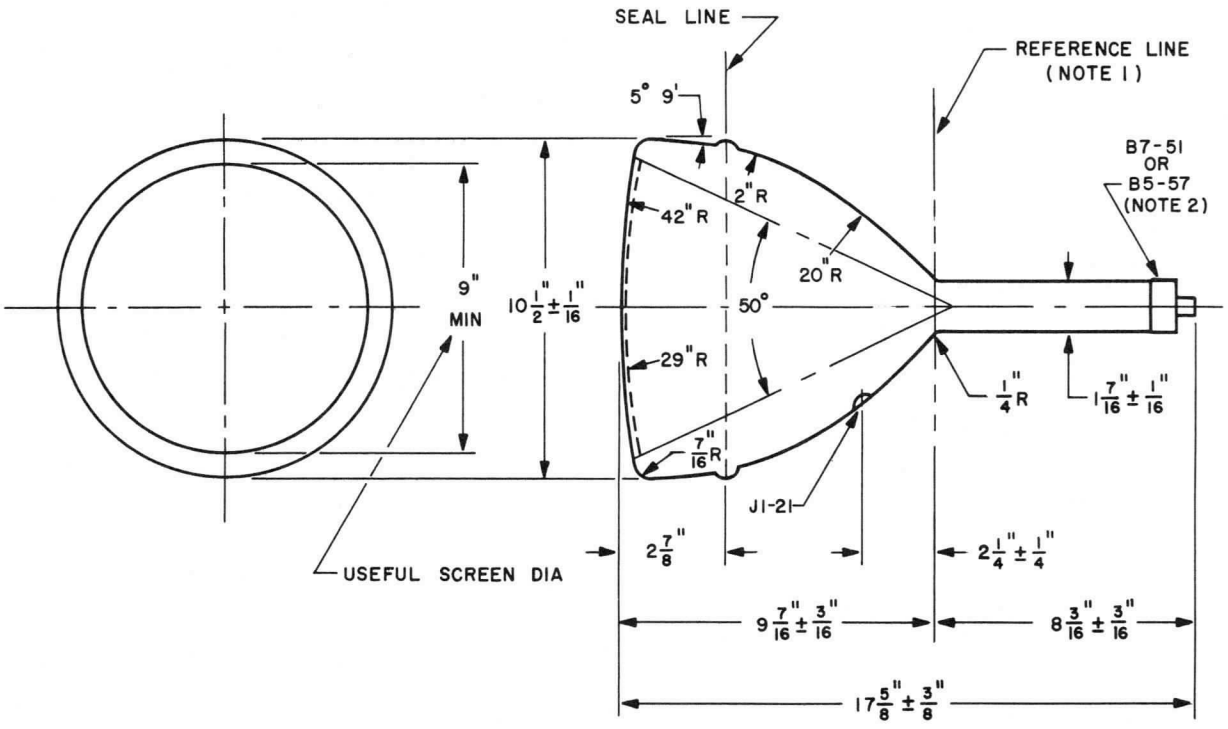

S58059

DIAGRAM NOTES:

1. *Reference line is determined by the plane of the upper edge of the reference line gauge (JEDEC No. 112) when the gauge is seated on the cone.*
2. *Anode terminal aligns with Pin Position No. 3 ± 10 degrees and is on same side of bulb as Pin Position No. 3.*

SYLVANIA

engineering data service

SYLVANIA

10NP11

CHARACTERISTICS

GENERAL DATA

Focusing Method	Magnetic
Deflecting Method	Magnetic
Deflecting Angle (approx.)	52 Degrees
Phosphor	P11
Fluorescence	Blue
Persistence	Short
Faceplate	Gray Filter Glass

ELECTRICAL DATA

Heater Voltage	6.3 Volts
Heater Current	0.6 Ampere
Direct Interelectrode Capacitances (approx.)	
Cathode to All Other Electrodes	5 $\mu\mu$f
Grid to All Other Electrodes	6 $\mu\mu$f
External Conductive Coating to Anode	1500 $\mu\mu$f Max.
	500 $\mu\mu$f Min.

MECHANICAL DATA

Minimum Useful Screen Diameter	9⅛ Inches
Bulb Contact (Recessed Small Cavity Cap)	J1-21
Base (Small Shell Duodecal 5-Pin)	B5-57
Basing	12G
Bulb Contact Aligns with Vacant Pin Position No. 3	±30 Degrees

RATINGS

MAXIMUM RATINGS (Design Center Values)

Anode Voltage	25,000 Volts dc
Grid Voltage	
Negative Bias Value	350 Volts dc
Positive Bias Value	0 Volts dc
Positive Peak Value	2 Volts
Peak Heater-Cathode Voltage	
Heater Negative with Respect to Cathode	
During Warm-Up Period Not to Exceed 15 Seconds	410 Volts
After Equipment Warm-Up Period	150 Volts
Heater Positive with Respect to Cathode	150 Volts

RECOMMENDED OPERATING CONDITIONS

Anode Voltage	18,000 Volts dc
Grid Voltage[1]	−65 to −125 Volts dc
Focusing Coil Current (approx.)[2]	110 Ma dc

CIRCUIT VALUES

Grid No. 1 Circuit Resistance	1.5 Megohms Max.

NOTES:

1. *Visual extinction of undeflected focused spot.*
2. *For JETEC focusing 109 or equivalent, three and one quarter inches from reference line.*

QUICK REFERENCE DATA

Special Purpose Tube
10″ Video Recording Tube
Round Glass Type
Magnetic Deflection
Magnetic Focus
Gray Filter Glass
Aluminized Screen

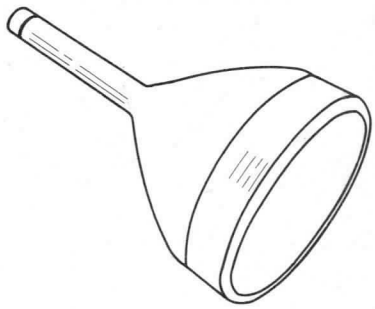

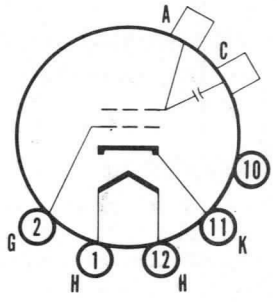

12-G

SYLVANIA ELECTRIC PRODUCTS INC.

TELEVISION PICTURE TUBE DIVISION
SENECA FALLS, NEW YORK

Prepared and Released By The TECHNICAL PUBLICATIONS SECTION EMPORIUM, PENNSYLVANIA

JULY, 1954

SYLVANIA

10NP11

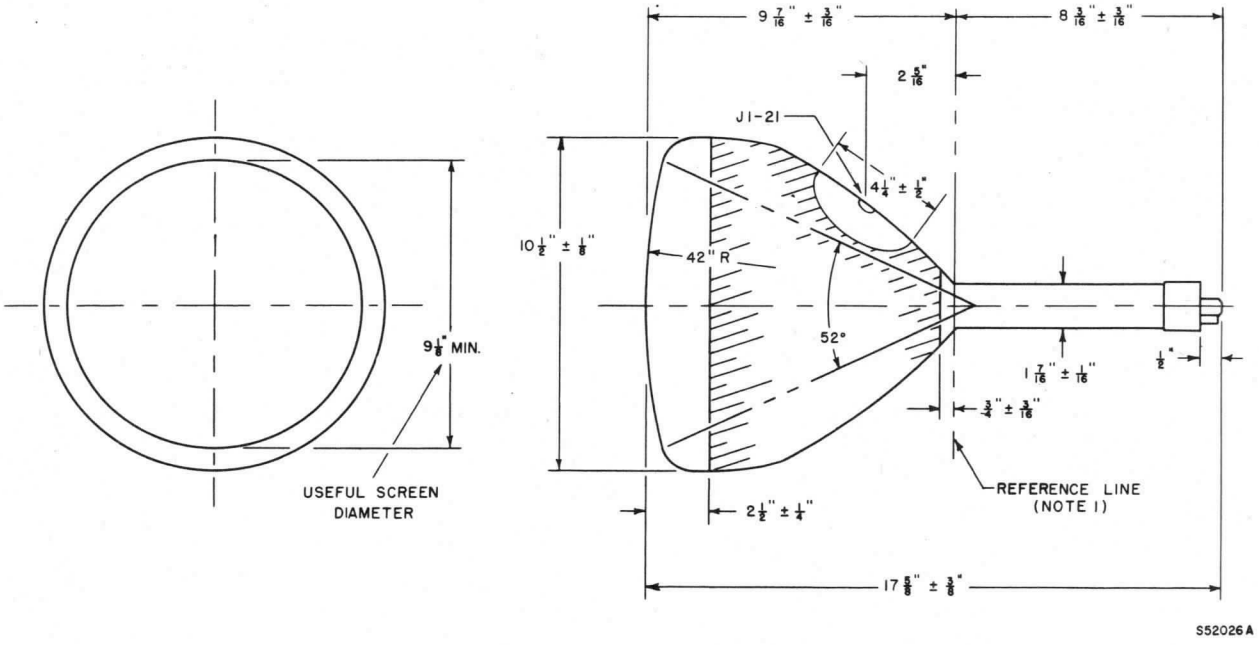

DIAGRAM NOTES:

1. Reference line is determined by position where JETEC reference line gauge No. 112 will rest on the bulb cone.

WARNING:

X-ray radiation shielding may be necessary to protect against possible danger of personal injury from prolonged exposure at close range if this tube is operated at higher than the manufacturer's Maximum Rated Anode Voltage or 16,000 volts, whichever is less.

CHARACTERISTICS

GENERAL DATA

Focusing Method	Electrostatic	
Deflecting Method	Magnetic	
Deflection Angle (approx.)	50	Degrees
Phosphor	Aluminized P4	
Fluorescence	White	
Persistence	Short to Medium	
Faceplate	Gray Filter Glass	
Light Transmittance	76	Percent

ELECTRICAL DATA

Heater Voltage	6.3	Volts
Heater Current (approx.)	0.6	Ampere
Direct Interelectrode Capacitances (approx.)		
Cathode to All Other Electrodes	5	$\mu\mu f$
Grid No. 1 to All Other Electrodes	6	$\mu\mu f$

MECHANICAL DATA

Minimum Useful Screen Diameter	9⅛	Inches
Bulb Contact (Recessed Small Cavity Cap)	J1-21	
Base (Small Shell Duodecal 6-Pin)	B6-63	
Basing	12Q	
Bulb Contact Aligns with Pin No. 6	±10	Degrees

RATINGS

MAXIMUM RATINGS (Absolute Maximum Values)

Anode Voltage	22,000	Volts	dc
Grid No. 3 Voltage	3300	Volts	
Grid No. 2 Voltage	450	Volts	dc
Grid No. 1 Voltage			
Negative Bias Value	140	Volts	dc
Positive Bias Value	0	Volts	dc
Positive Peak Value	2	Volts	
Peak Heater-Cathode Voltage			
Heater Negative with Respect to Cathode			
During Warm-up Period not to Exceed 15 Seconds	450	Volts	
After Warm-up Period	200	Volts	
Heater Positive with Respect to Cathode	200	Volts	

TYPICAL OPERATING CONDITIONS

Anode Voltage[1]	14,000	Volts	dc
Grid No. 3 Voltage for Focus with I_b=100 μAmps	1640 to 2225	Volts	
Alignment magnet field strength	0 to 8	Gausses	
Grid No. 2 Voltage	200	Volts	dc
Grid No. 1 Voltage Required for Cutoff[2]	−18 to −48	Volts	dc
Grid No. 3 Current at I_b=100 μAmps	25	μa	Max.

CIRCUIT VALUES

Grid No. 1 Circuit Resistance	1.5	Megohms Max.

NOTES:

1. *Brilliance and definition decrease with decreasing anode voltage. In general, anode voltage should not be less than 10,000 volts.*
2. *Visual extinction of focused raster. Extinction of stationary focused spot will require that these values be about 5 volts more negative.*

QUICK REFERENCE DATA

Monitor Tube
10" Direct Viewed
Round Glass Type
Spherical Faceplate
Gray Filter Glass
Aluminized Screen
Magnetic Deflection
No Ion Trap
Acceleration Type
Electrostatic Focus

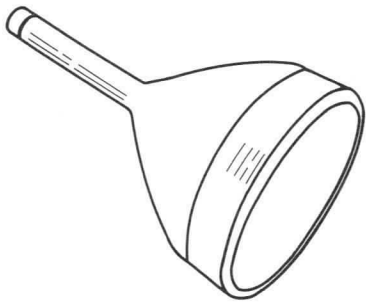

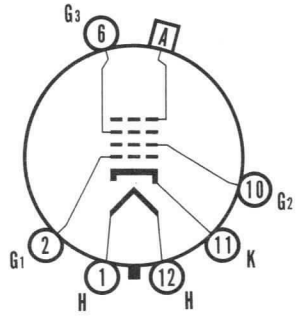

12-Q

SYLVANIA ELECTRIC PRODUCTS INC.
TELEVISION PICTURE TUBE DIVISION
SENECA FALLS, NEW YORK

Prepared and Released By The TECHNICAL PUBLICATIONS SECTION EMPORIUM, PENNSYLVANIA
APRIL, 1958

WARNING:

X-ray radiation shielding may be necessary to protect against possible danger of personal injury from prolonged exposure at close range if this tube is operated at higher than the manufacturer's Maximum Rated Anode Voltage or 16,000 volts, whichever is less.

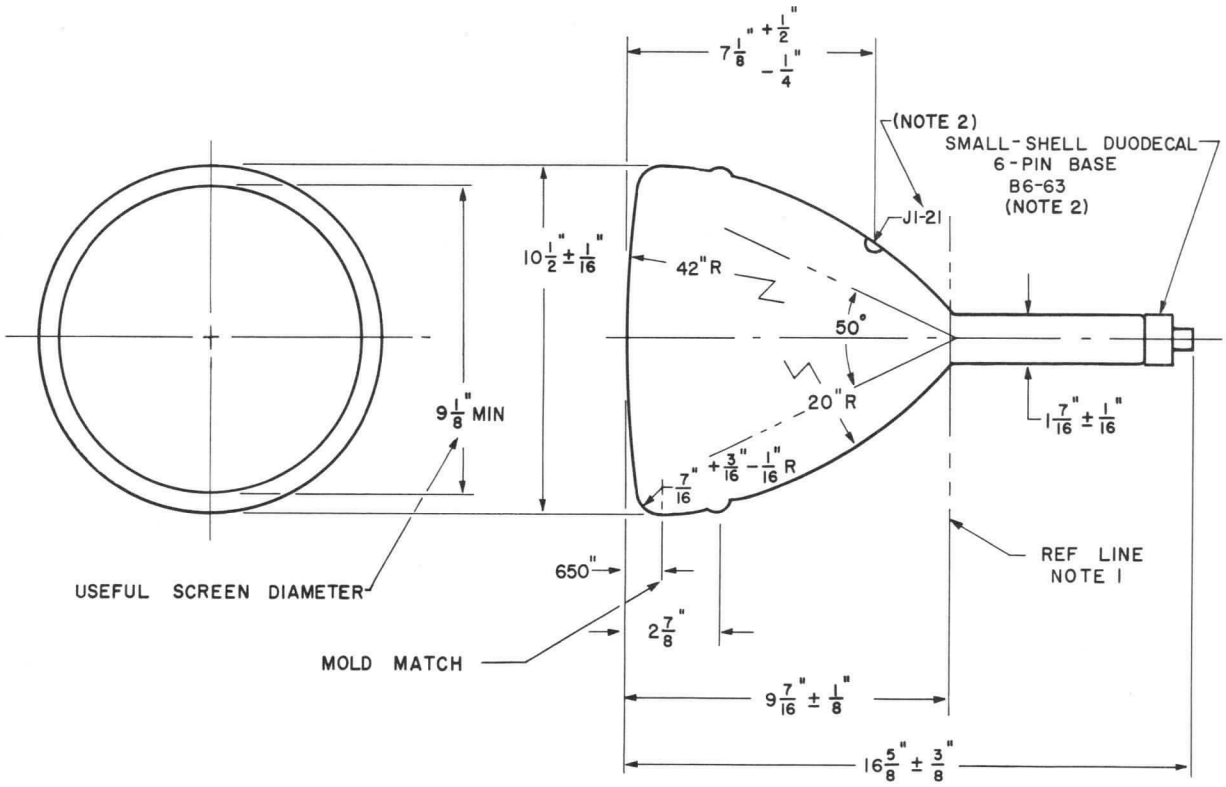

S58007

DIAGRAM NOTES:

1. *Reference line is determined by JETEC No. 112 reference line gauge.*
2. *The plane through the tube axis and Pin No. 6 may vary from the plane through the tube axis and bulb terminal by an angular tolerance (measured about the tube axis) of ± 10°. Bulb terminal is on same side as Pin No. 6.*

SYLVANIA

engineering data service

SYLVANIA
10VP15
10VP*

CHARACTERISTICS

GENERAL DATA

Focusing Method	Magnetic
Deflecting Method	Magnetic
Deflection Angle (Approx.)	50 Degrees
Phosphor	Aluminized, P15
Fluorescence	Blue-Green
Persistence	Extremely Short
Faceplate	Clear Glass

**In addition to the type shown, the 10VP- can be supplied with several other screen phosphors.*

ELECTRICAL DATA

Heater Voltage	6.3 Volts
Heater Current	0.6 ± 10% Ampere
Direct Interelectrode Capacitances (approx.)	
Cathode to All Other Electrodes	5 μμf
Grid No. 1 to All Other Electrodes	6 μμf
External Conductive Coating to Anode[1]	2,500 μμf Max.
	500 μμf Min.

MECHANICAL DATA

Minimum Useful Screen Diameter	9⅛ Inches
Bulb Contact (Recessed Small Cavity Cap)	J1-21
Base (Small Shell Duodecal 5-Pin)	B5-57
Basing	12N
Bulb	J84C or J84D
Weight	9 Pounds

RATINGS

MAXIMUM RATINGS (Absolute Maximum Values)

Anode Voltage	13,200 Volts	dc
Grid No. 2 Voltage	450 Volts	dc
Grid No. 1 Voltage		
Negative Bias Value	140 Volts	dc
Positive Bias Value	0 Volts	dc
Positive Peak Value	2 Volts	
Peak Heater-Cathode Voltage		
Heater Negative with Respect to Cathode		
During Warm-up Period Not to Exceed 15 Seconds	450 Volts	
After Warm-up Period	154 Volts	
Heater Positive with Respect to Cathode	154 Volts	

TYPICAL OPERATING CONDITIONS

Anode Voltage	11,000 Volts	dc
Grid No. 2 Voltage	250 Volts	dc
Grid No. 1 Voltage Required for Cutoff[2]	−28 to −72 Volts	dc
Focusing Coil Current (Approx.)[3]	110 Ma	dc
Spot Position (Undeflected)	16 mm	Max.

CIRCUIT VALUES

Grid No. 1 Circuit Resistance	1.5 Megohms Max.

QUICK REFERENCE DATA

Flying Spot Scanner
10" Round Glass Type
Spherical Faceplate
Clear Glass
Aluminized Screen
Magnetic Deflection
Magnetic Focus
External Conductive Coating

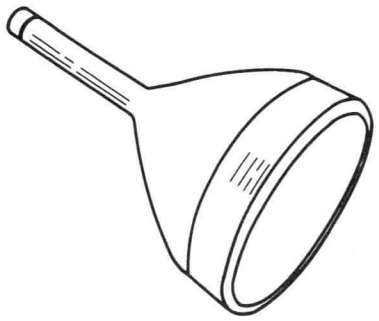

153003

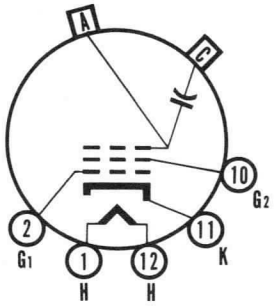

12-N

SYLVANIA
ELECTRONIC TUBES
A Division of
Sylvania Electric Products Inc.
PICTURE TUBE OPERATIONS
SENECA FALLS, NEW YORK

Prepared and Released By The
TECHNICAL PUBLICATIONS SECTION
EMPORIUM, PENNSYLVANIA

NOVEMBER, 1958

NOTES:

1. *External Conductive Coating must be grounded.*
2. *Visual extinction of focused raster. Extinction of stationary focused spot will require that these values be about 5 volts more negative.*
3. *For standard focus coil EIA No. 106 or equivalent, with the combined Grid No. 1 bias voltage and video-signal voltage adjusted to produce a highlight brightness of 40 foot-lamberts on a 6 inch by 8 inch picture area. Center of the air gap of the coil to reference line shall be 3¼ inches.*

WARNING:

X-ray radiation shielding may be necessary to protect against possible danger of personal injury from prolonged exposure at close range if this tube is operated at higher than the manufacturer's Maximum Rated Anode Voltage or 16,000 volts, whichever is less.

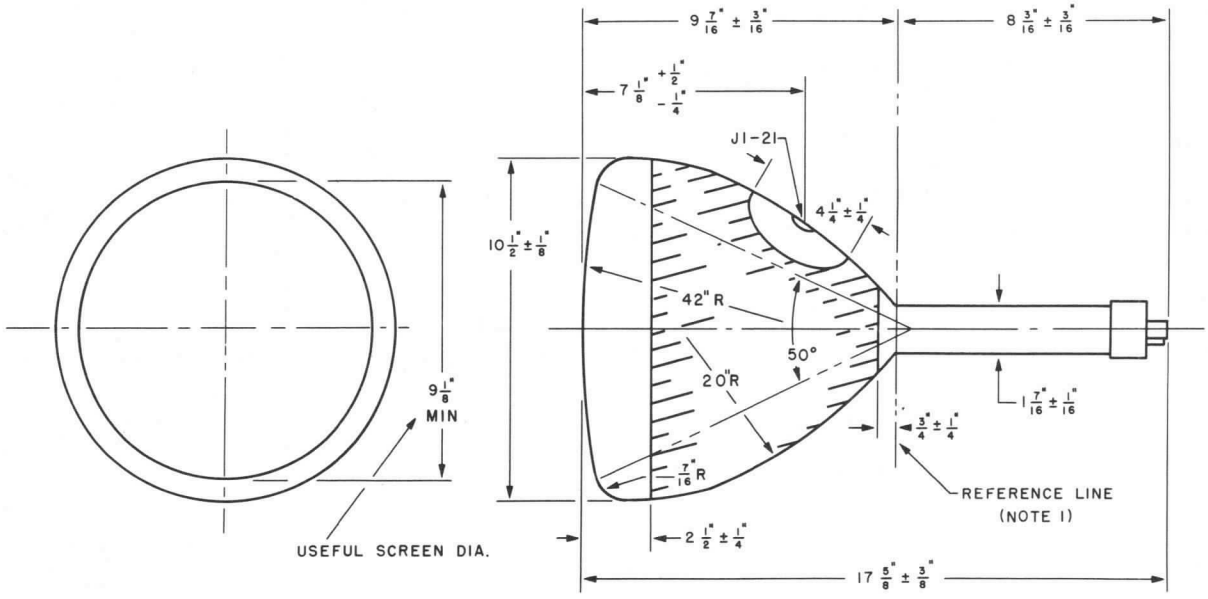

S58014

DIAGRAM NOTES:

1. *Reference line is determined by position where JETEC No. 112 reference line gauge will seat against bulb.*
2. *Vacant position Pin No. 3 aligned with anode, contact cap (J1-21) within 30 degrees.*

CHARACTERISTICS

GENERAL DATA

Focusing Method	Electrostatic
Deflection Method	Magnetic
Deflection Angle (approx.)	50 Degrees

Phosphor	P7	P14	P19
Fluorescence	Blue	Purple	Orange
Phosphorescence	Yellow	Yellow	Orange
Persistence	Long	Medium-Long	Long

Faceplate	Gray Filter Glass
Light Transmittance	76 Percent

ELECTRICAL DATA

Heater Voltage	6.3 Volts
Heater Current	0.6 ±10% Ampere
Direct Interelectrode Capacitances (approx.)	
Cathode to All Other Electrodes	5 μμf
Grid No. 1 to All Other Electrodes	6 μμf

MECHANICAL DATA

Minimum Useful Screen Diameter	9 Inches
Bulb Contact (Recessed Small Cavity Cap)	J1-21
Base (Small Shell Duodecal 6-Pin)	B6-63
Basing	12M
Bulb Contact Aligns with Vacant Pin Position No. 3	±10 Degrees

RATINGS

MAXIMUM RATINGS (Absolute Maximum Values)

Anode Voltage	13,200 Volts	dc
Grid No. 4 Voltage (Focusing Electrode)	-550 to 1100 Volts	dc
Grid No. 2 Voltage	770 Volts	dc
Grid No. 1 Voltage		
Negative Bias Value	200 Volts	dc
Positive Bias Value[1]	0 Volts	dc
Positive Peak Value	0 Volts	
Peak Heater-Cathode Voltage		
Heater Negative with Respect to Cathode	200 Volts	dc
Heater Positive with Respect to Cathode	200 Volts	dc

TYPICAL OPERATING CONDITIONS

Anode Voltage[2]	10,000 Volts	dc
Grid No. 4 Voltage for Focus[3]	0 to 300 Volts	dc
Grid No. 2 Voltage	300 Volts	dc
Grid No. 1 Voltage for Cutoff[4]	-28 to -72 Volts	dc

MAXIMUM CIRCUIT VALUE

Grid No. 1 Circuit Resistance	1.5 Megohms Max.

QUICK REFERENCE DATA

Special Purpose Tube
10" Direct Viewed
Round Glass Type
Spherical Faceplate
Gray Filter Glass
Magnetic Deflection
Electrostatic Focus

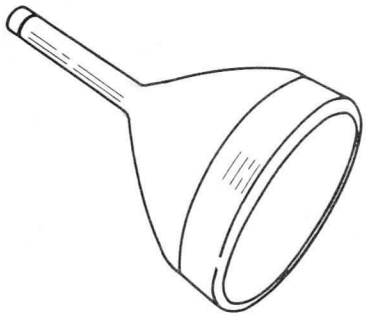

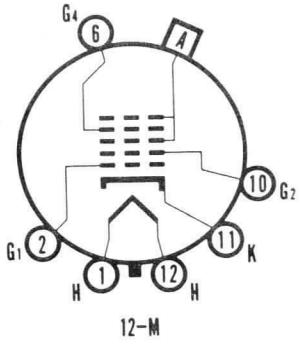

12-M

SYLVANIA ELECTRIC PRODUCTS INC.
TELEVISION PICTURE TUBE DIVISION
SENECA FALLS, NEW YORK

Prepared and Released By The TECHNICAL PUBLICATIONS SECTION EMPORIUM, PENNSYLVANIA

NOVEMBER, 1957

NOTES:

1. *At or near this rating, the effective resistance of the anode supply should be adequate to limit the anode input power to 6 watts. The screen of the 10WP19 can be permanently damaged should the current density be permitted to rise too high. To prevent burning, minimum beam current densities should be employed.*
2. *Brilliance and definition decrease with decreasing anode voltage. In general, anode voltage should not be less than 7,000 volts.*
3. *With E_{g1} adjusted for Ib = 100 microamperes, E_{g4} is adjusted for best overall focus of a 6" x 8" raster pattern.*
4. *Visual extinction of focused raster. Extinction of stationary focused spot will require that those values be about 5 volts more negative.*

10WP7A, 10WP14A, 10WP19A

These types are identical to the 10WP7, 10WP14, and 10WP19, respectively, except that they employ aluminized screens.

WARNING:

X-ray radiation shielding may be necessary to protect against possible danger of personal injury from prolonged exposure at close range if this tube is operated at higher than the manufacturer's Maximum Rated Anode Voltage or 16,000 volts, whichever is less.

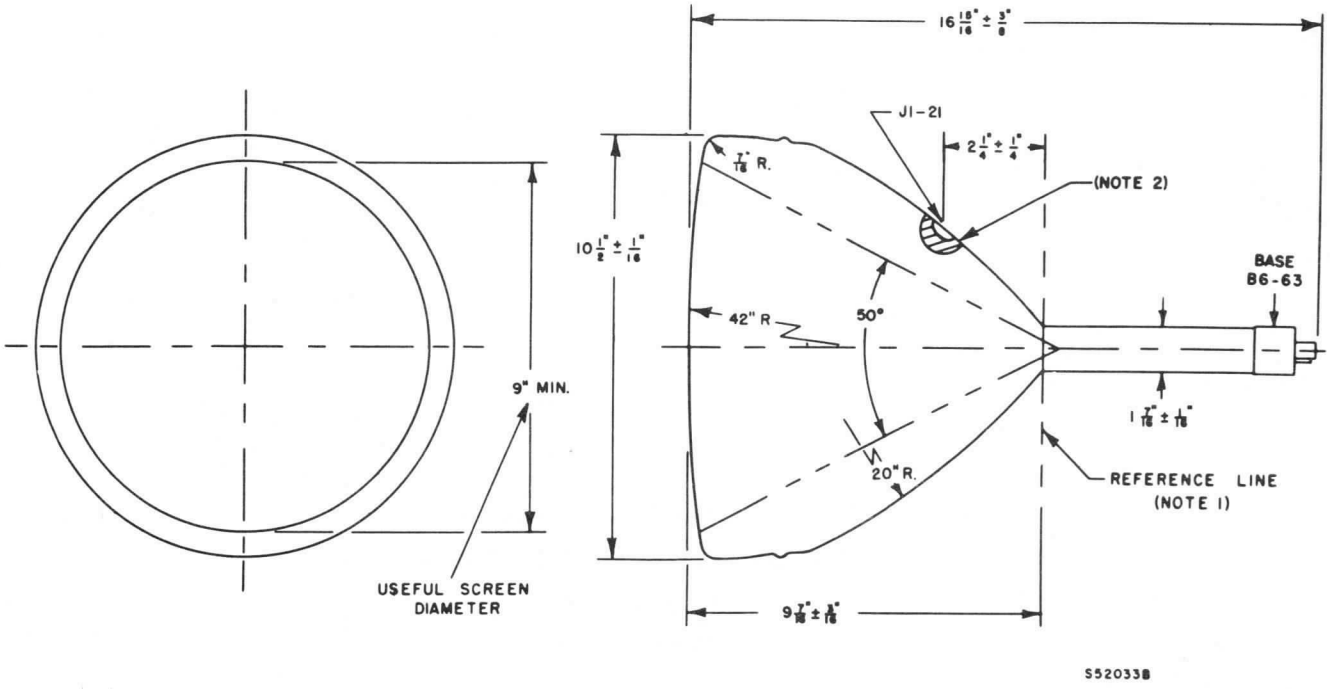

DIAGRAM NOTES:

1. *Reference line is the point where a 1.500* $^{+.003}_{-.000}$ *diameter ring gauge 2 inches long, will stop against bulb.*
2. *Anti-Corona coating 1-1/2 inch min. radius concentric with contact. Do not handle tube by the part of the bulb having the anti-corona coating.*

A Technical Publication of

SYLVANIA ELECTRIC
PRODUCTS INC.

EMPORIUM, PA.

SYLVANIA

engineering data service

SYLVANIA
12ABP7 12ABP7A
12ABP14
12ABP14A
12ABP19
12ABP19A

CHARACTERISTICS

GENERAL DATA

Focusing Method	Electrostatic		
Deflection Method	Magnetic		
Deflection Angle (approx.)	55 Degrees		
Phosphor	P7	P14	P19
Fluorescence	Blue	Purple	Orange
Phosphorescence	Yellow	Yellow	Orange
Persistence	Long	Medium-Long	Long
Faceplate	Gray Filter Glass		
Light Transmittance	74 Percent		

ELECTRICAL DATA

Heater Voltage	6.3 Volts
Heater Current	0.6 ±10% Ampere
Direct Interelectrode Capacitances (approx.)	
Cathode to All Other Electrodes	5 μμf
Grid No. 1 to All Other Electrodes	6 μμf

MECHANICAL DATA

Minimum Useful Screen Diameter	11 Inches
Bulb Contact (Recessed Small Cavity Cap)	J1-21
Base (Small Shell Duodecal 6-Pin)	B6-63
Basing	12M
Bulb Contact Aligns with Vacant Pin Position No. 3	±10 Degrees

RATINGS

MAXIMUM RATINGS (Absolute Maximum Values)

Anode Voltage	13,200 Volts dc
Grid No. 4 Voltage (Focusing Electrode)	-550 to 1100 Volts dc
Grid No. 2 Voltage	770 Volts dc
Grid No. 1 Voltage	
Negative Bias Value	200 Volts dc
Positive Bias Value[1]	0 Volts dc
Positive Peak Value	0 Volts
Peak Heater-Cathode Voltage	
Heater Negative with Respect to Cathode	200 Volts dc
Heater Positive with Respect to Cathode	200 Volts dc

TYPICAL OPERATING CONDITIONS

Anode Voltage[2]	10,000 Volts dc
Grid No. 4 Voltage for Focus[3]	0 to 300 Volts dc
Grid No. 2 Voltage	300 Volts dc
Grid No. 1 Voltage for Cutoff[4]	-28 to -72 Volts dc
Alignment Magnet Field Strength[5]	0 to 4 Gausses

MAXIMUM CIRCUIT VALUES

Grid No. 1 Circuit Resistance	1.5 Megohms Max.

QUICK REFERENCE DATA

Special Purpose Tube
12" Direct Viewed
Round Glass Type
Spherical Faceplate
Gray Filter Glass
Magnetic Deflection
Electrostatic Focus

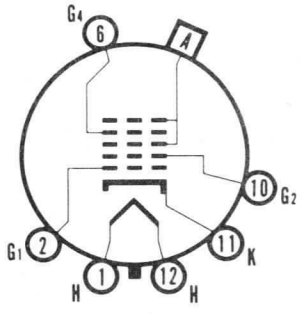

12-M

SYLVANIA ELECTRIC PRODUCTS INC.
TELEVISION PICTURE TUBE DIVISION
SENECA FALLS, NEW YORK

Prepared and Released By The TECHNICAL PUBLICATIONS SECTION EMPORIUM, PENNSYLVANIA
NOVEMBER, 1957

NOTES:

1. *At or near this rating, the effective resistance of the anode supply should be adequate to limit the anode input power to 6 watts. The screen of the 12ABP19 can be permanently damaged should the current density be permitted to rise too high. To prevent burning, minimum beam current densities should be employed.*
2. *Brilliance and definition decrease with decreasing anode voltage. In general, anode voltage should not be less than 8,000 volts.*
3. *With E_{g1} adjusted for Ib = 100 microamperes, E_{g4} is adjusted for best overall focus of a 7-1/2" x 10" raster pattern.*
4. *Visual extinction of focused raster. Extinction of stationary focused spot will require that these values be about 5 volts more negative.*
5. *For optimum quality of the focused spot, use of a beam alignment magnet is recommended. It should be an adjustable magnet of the specified strength, located approximately 5 1/16" from the reference line.*

12ABP7A, 12ABP14A, 12ABP19A

These types are identical to the 12ABP7, 12ABP14, 12ABP19 respectively, except that they employ aluminized screens.

WARNING:

X-ray radiation shielding may be necessary to protect against possible danger of personal injury from prolonged exposure at close range if this tube is operated at higher than the Manufacturer's Maximum Rated Anode Voltage or 16,000 volts, whichever is less.

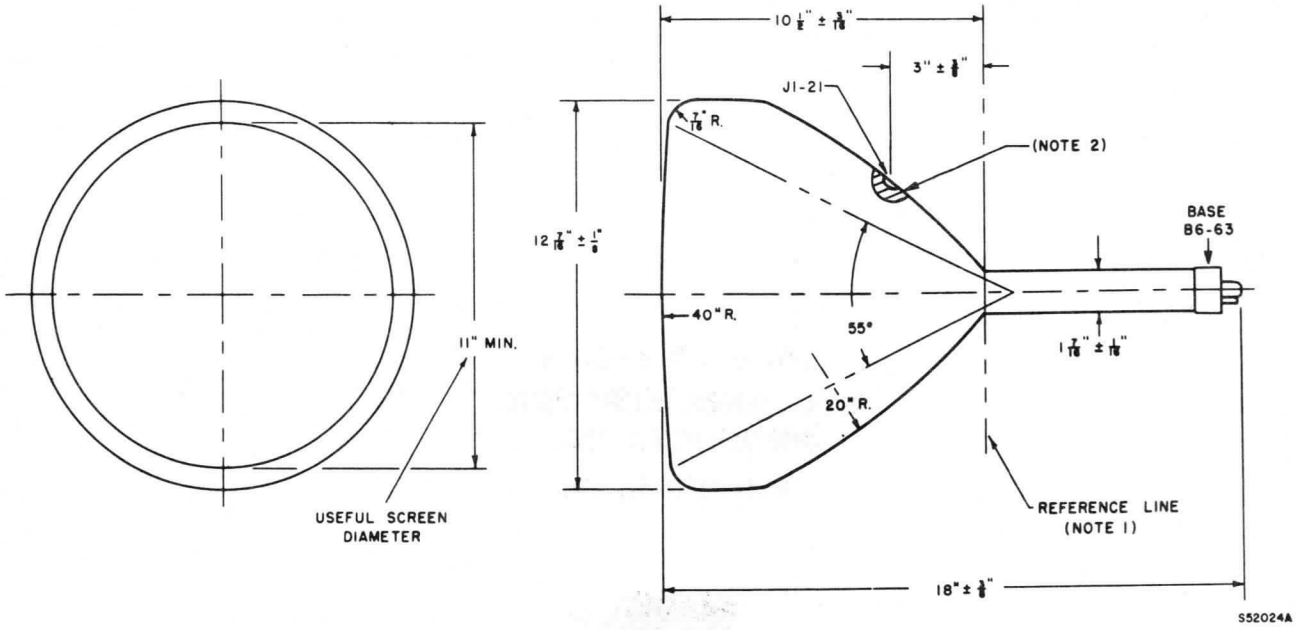

DIAGRAM NOTES:

1. *Reference line is the point where a 1.500* $^{+.003}_{-.000}$ *diameter ring gauge 2 inches long, will stop.*
2. *Anti-corona Coating 1-1/2" minimum radius concentric with contact. Do not handle tube by the part of the bulb having the anti-corona coating.*

A Technical Publication of

SYLVANIA ELECTRIC
PRODUCTS INC.

EMPORIUM, PA.

CHARACTERISTICS

GENERAL DATA

Focusing Method			Electrostatic	
Deflecting Method			Electrostatic	
Phosphor*	P7	P14	P19	P25
Fluorescence	Blue-White	Purple	Orange	Orange
Phosphorescence	Yellow	Orange	Orange	Orange
Persistence	Long	Med. Long	Long	Long
Faceplate			Gray Filter Glass	

* In addition to the screens shown, the 12ANP- can be supplied with several other screen phosphors.

ELECTRICAL DATA

Heater Voltage	6.3 Volts
Heater Current	0.6 ± 10% Ampere
Direct Interelectrode Capacitances (Approx.)	
Cathode to All Other Electrodes	6.0 pf
Grid No. 1 to All Other Electrodes	8.0 pf
Between Deflecting Plates 1-2	5.0 pf
Between Deflecting Plates 3-4	3.0 pf
Deflecting Plate 1 to All Other Electrodes	14.5 pf
Deflecting Plate 2 to All Other Electrodes	13.0 pf
Deflecting Plate 3 to All Other Electrodes	6.2 pf
Deflecting Plate 4 to All Other Electrodes	6.5 pf

MECHANICAL DATA

Minimum Useful Screen Diameter	11 Inches
Bulb Contact (Recessed Small Cavity Cap)	J1-22
Neck Contacts (Small Ball Caps)	J1-25
Base (Medium Shell Diheptal 12-Pin)	B12-37
Basing	14AW
J1-22 Contact Aligns with Trace D3-D4	±10 Degrees
J1-22 Contact Aligns with Pin No. 11	±10 Degrees
Neck Contact (A2) Aligns with Trace D1-D2	±10 Degrees
Positive Voltage on D1 Deflects Beam Approx. Away From A2	
Positive Voltage on D3 Deflects Beam Approx. Away From Post Accelerator Button	

RATINGS

MAXIMUM RATINGS (Absolute Maximum Values)

Anode Input[1]	6 Watts
Anode No. 3 Voltage	16,000 Volts dc
Anode No. 2 Voltage	8,000 Volts dc
Anode No. 1 Voltage	3,000 Volts dc
Grid No. 1 Voltage	
Negative Bias Value	300 Volts dc
Positive Bias Value	0 Volts dc

QUICK REFERENCE DATA

Oscilloscope Tube
12" Direct Viewed
Round Glass Type
Electrostatic Deflection
Electrostatic Focus
Post Deflection Acceleration
Aluminized Screen

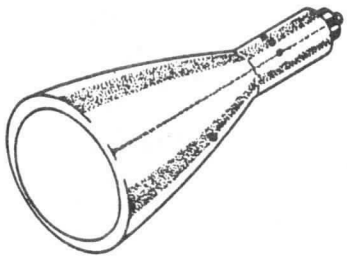

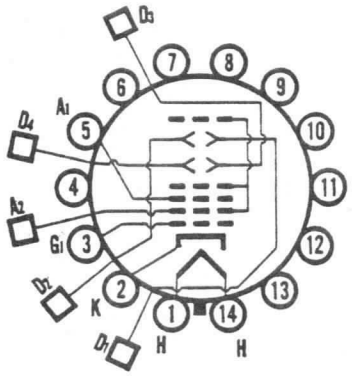

14AW

SYLVANIA ELECTRIC PRODUCTS INC.

Electronic Components Group
ELECTRONIC TUBE DIVISION
SENECA FALLS, NEW YORK

A Technical Publication

May 5, 1965

MAXIMUM RATINGS (Absolute Maximum Values) (Cont'd)

Positive Peak Value	2	Volts
Peak-Heater-Cathode Voltage		
Heater Negative with Respect to Cathode	180	Volts
Heater Positive with Respect to Cathode	180	Volts
Peak Voltage Between Anode No. 2 and Any Deflecting Plate	1500	Volts
Ratio (Post Accelerator Voltage to Anode Voltage)	2:5	

TYPICAL OPERATING CONDITIONS

Anode No. 3 Voltage	9700	Volts dc
Anode No. 2 Voltage	6100	Volts dc
Anode No. 1 Voltage for Focus	1510 to 2225	Volts dc
Grid No. 1 Voltage Required for Cutoff[2]	-135 to -202	Volts dc
Deflection Factors[3]		
Deflecting Plates 1-2	100 to 150	Volts dc/Inch
Deflecting Plates 3-4	100 to 150	Volts dc/Inch
Modulation[4]	45	Volts Max.
Line Width "A"[4]	.5	mm
Line Width "B"[4]	.75	mm
Focus Electrode Current[4]	-25 to +25	µa
Spot Position, Undeflected	Within 20 mm Square	
Angle Between D1-D2 Trace and D3-D4 Trace	90 ± 1	Degree

CIRCUIT VALUES

Grid No. 1 Circuit Resistance	2.0	Megohms Max.
Resistance in Any Deflection Plate Circuit	5.0	Megohms Max.

NOTES:

1. Anode input equals the product of Anode No. 2 voltage and average Anode No. 2 current.

2. For visual extinction of undeflected focused spot.

3. Deflection plates 1 and 2 are nearer the screen.

4. Measured in accordance with MIL-E-1 specification at a post accelerator current (IA3) equal to 25 µa.

OUTLINE

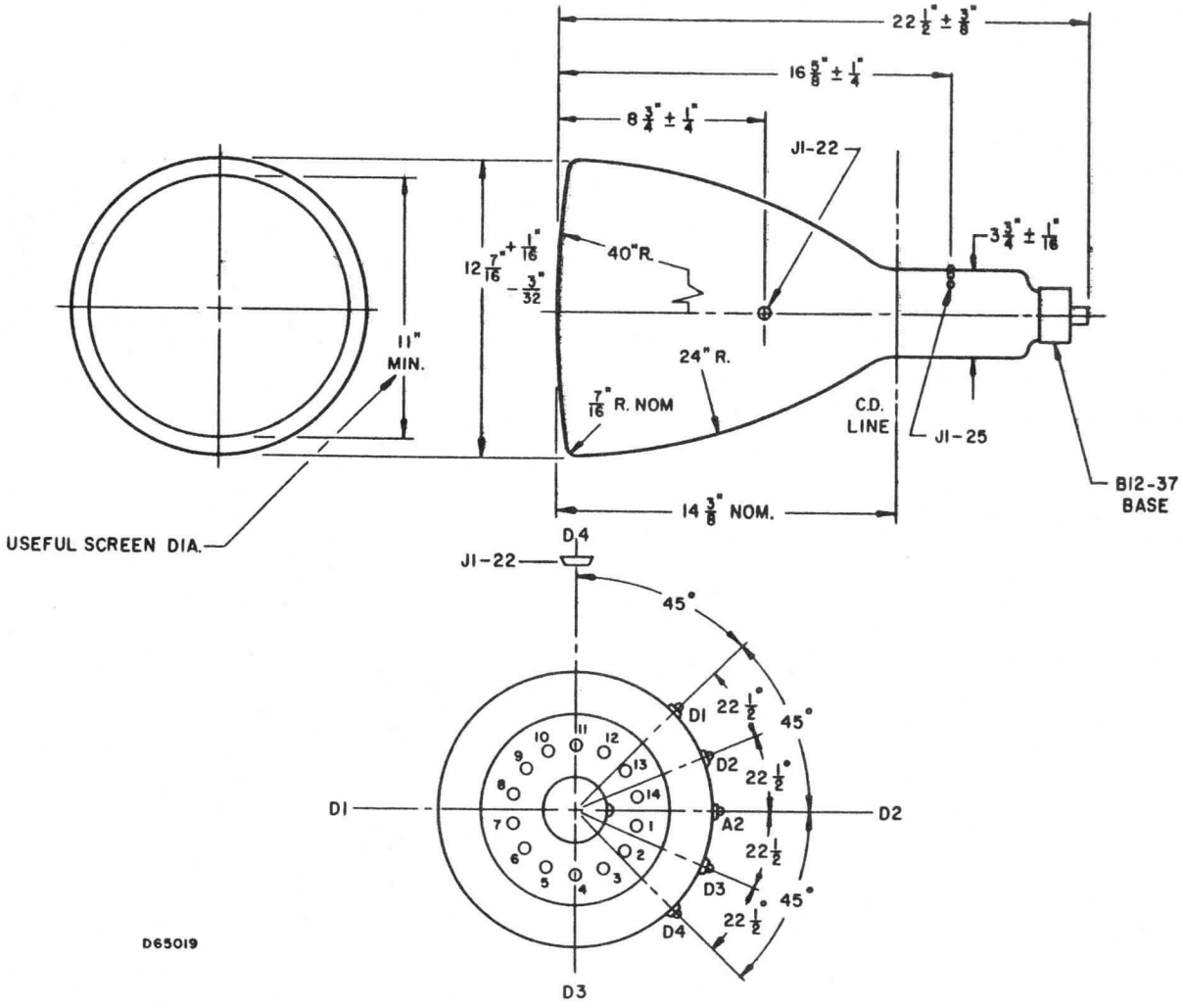

BOTTOM VIEW OF BASE

CHARACTERISTICS

GENERAL DATA

Focusing Method			Electrostatic	
Deflecting Method			Electrostatic	
Phosphor*	P1	P2	P7	P11
Fluorescence	Green	Green	White	Blue
Phosphorescence	Green	Green	Yellow	—
Persistence	Medium	Medium	Long	Short
Faceplate			Gray Filter Glass	

*In addition to the screens shown, the 12AXP- can be supplied with several other screen phosphors.

ELECTRICAL DATA

Heater Voltage	6.3 Volts
Heater Current	0.6 ± 10 % Amperes
Direct Interelectrode Capacitances (Approx.)	
Cathode to All Other Electrodes	10 pf
Grid No. 1 to All Other Electrodes	8 pf
Between Deflecting Plates 1-2	4 pf
Between Deflecting Plates 3-4	2 pf
Deflecting Plate 1 to All Other Electrodes Except D2	8 pf
Deflecting Plate 2 to All Other Electrodes Except D1	8 pf
Deflecting Plate 3 to All Other Electrodes Except D4	6 pf
Deflecting Plate 4 to All Other Electrodes Except D3	6 pf

MECHANICAL DATA

Minimum Useful Screen Diameter	11 Inches
Bulb Contact (Recessed Small Cavity Cap)	J1-21
Base (Medium Shell Diheptal 12-Pin)	B12-37
Basing	14J
Weight (Approx.)	12 Pounds
J1-21 Contact Aligns with Trace D1-D2	±10 Degrees
J1-21 Contact Aligns with Pin No. 5	±10 Degrees
Positive Voltage on D1 Deflects Beam Approx. Toward Pin No. 5	
Positive Voltage on D3 Deflects Beam Approx. Toward Pin No. 1	
Bulb	C99½ Exp. 28, or Equivalent

RATINGS

MAXIMUM RATINGS (Absolute Maximum Values)

Anode Input[1]	6 Watts	
Anode No. 3 Voltage	12,000 Volts	dc
Anode No. 2 Voltage	6000 Volts	dc
Anode No. 1 Voltage	2500 Volts	dc
Grid No. 1 Voltage		
Negative Bias Value	200 Volts	dc
Positive Bias Value	0 Volt	dc
Positive Peak Value	2 Volts	
Peak Heater-Cathode Voltage		
Heater Negative with Respect to Cathode	200 Volts	
Heater Positive with Respect to Cathode	200 Volts	
Peak Voltage Between Anode No. 2 and Any Deflecting Plate	750 Volts	
Ratio (Post Accelerator Voltage to Anode Voltage)	2.3:1	

QUICK REFERENCE DATA

Oscilloscope Tube
12″ Direct Viewed
Round Glass Type
Electrostatic Deflection
Electrostatic Focus
Post Deflection Acceleration

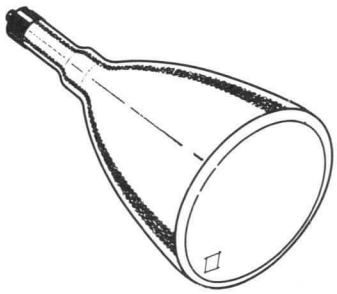

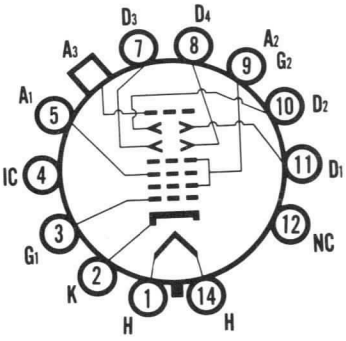

14-J

SYLVANIA ELECTRIC PRODUCTS INC.

Electronic Components Group
ELECTRONIC TUBE DIVISION
SENECA FALLS, NEW YORK

A Technical Publication

MARCH, 1965

PAGE 1 OF 2

File Under

SPECIAL AND GENERAL PURPOSE CATHODE RAY TUBES

TYPICAL OPERATING CONDITIONS

Anode No. 3 Voltage	10,000 Volts	dc
Anode No. 2 Voltage	5000 Volts	dc
Anode No. 1 Voltage for Focus	1300 to 2200 Volts	dc
Grid No. 1 Voltage Required for Cutoff[2]	−60 to −100 Volts	dc
Deflection Factors[3]		
Deflecting Plates 1-2	105 to 145 Volts	dc/Inch
Deflecting Plates 3-4	80 to 115 Volts	dc/Inch
Modulation[4]	30 Volts	Max.
Line Width "A"[4]	.5 mm	
Focus Electrode Current[4]	−15 to +10 μa	dc
Spot Position, Undeflected	Within 30 mm Square	
Angle Between D1-D2 Trace and D3-D4 Trace	90 ± 2 Degrees	
Useful Scan (Centered on Tube Face)[5]	9¾ x 9¾ Inches	Min.

CIRCUIT VALUES

Grid No. 1 Circuit Resistance	1.5 Megohms Max.
Resistance in Any Deflection Plate Circuit	5.0 Megohms Max.

NOTES:

1. *Anode input equals the product of Anode No. 2 voltage and average anode No. 2 current.*
2. *For visual extinction of undeflected focused spot.*
3. *Deflection plates 1 and 2 are nearer the screen.*
4. *Measured in accordance with MIL-E-1 specification at a post accelerator current (IA3) equal to 25 μa.*
5. *At EA3 = EA2, the entire useful screen area can be scanned.*

OUTLINE

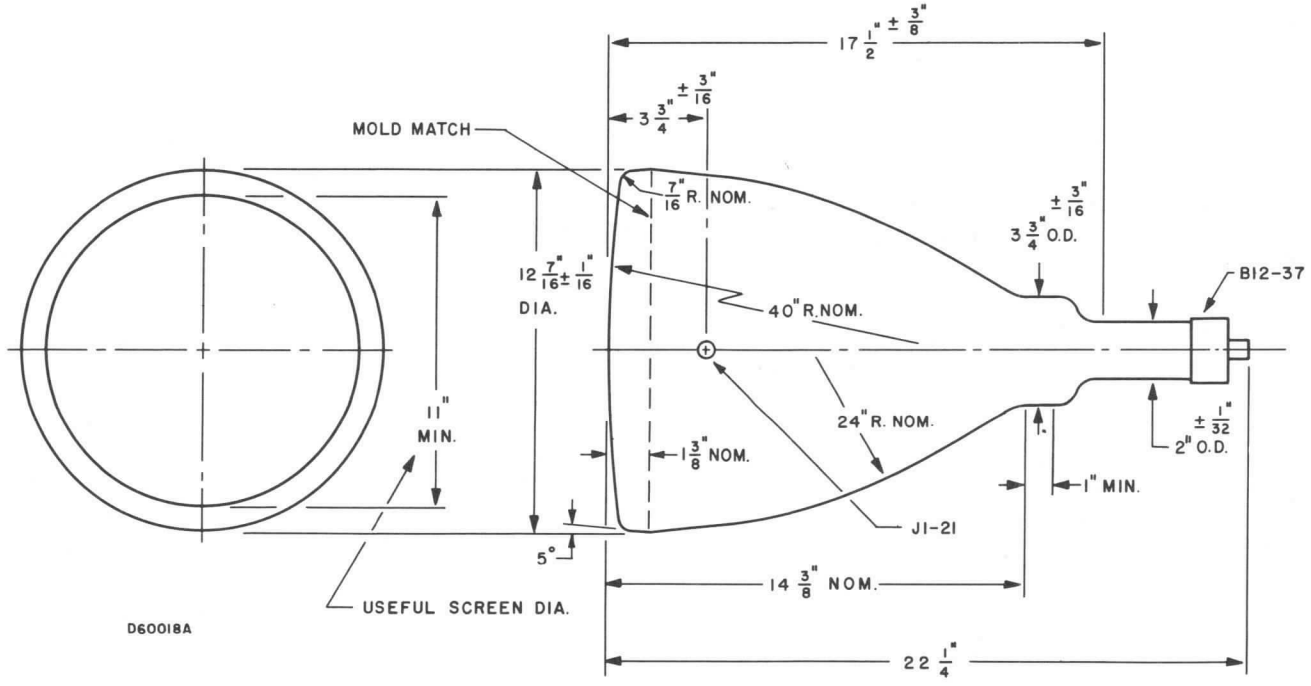

SYLVANIA

engineering data service

SYLVANIA
12DP7A*
12DP7C

CHARACTERISTICS

GENERAL DATA

Focusing Method		Magnetic	
Deflection Method		Magnetic	
Deflection Angle (Approx.)		50	Degrees
Types*	12DP7A	12DP7C	
Fluorescence	Blue-White	Blue-White	
Phosphorescence	Yellow	Yellow	
Persistence	Long	Long	
Faceplate	Clear or Gray	Gray	
Light Transmittance (approx.)			
Gray Faceplate	75	75	Percent
Screen	—	Aluminized	

*In addition to the types shown, the 12DP- can be supplied with several other screen phosphors.

ELECTRICAL DATA

Heater Voltage	6.3	Volts
Heater Current	0.6 ± 10%	Ampere
Direct Interelectrode Capacitances (approx.)		
Cathode to All Other Electrodes	5	μμf
Grid No. 1 to All Other Electrodes	8	μμf

MECHANICAL DATA

Minimum Useful Screen Diameter	10	Inches
Bulb	J96S or Equivalent	
Bulb Contact (Medium Cap)	C1-5	
Base		
12DP7A (Long Medium Shell Octal 5 or 8-Pin	B5-80 or B8-65	
12DP7C (Long Medium Shell 8-Pin)	B8-65	
Basing	5AN	
Bulb Contact Alignment		
Anode Contact Aligns with Pin No. 5	±10	Degrees
Weight (Approx.)	8½	Pounds

RATINGS

MAXIMUM RATINGS (Absolute Maximum Values)

	12DP7A	12DP7C		
Anode Voltage	11,000	13,200	Volts	dc
Grid No. 2 Voltage	770	770	Volts	dc
Grid No. 1 Voltage				
Negative Bias Value	200	200	Volts	dc
Positive Bias Value	0	0	Volts	dc
Positive Peak Value	2	2	Volts	
Peak Heater-Cathode Voltage				
Heater Negative with Respect to Cathode	140	200	Volts	
Heater Positive with Respect to Cathode	140	200	Volts	

QUICK REFERENCE DATA

12" Direct Viewed
Round Glass Type
Magnetic Deflection
Magnetic Focus
Gray Filter Glass Faceplate
Spherical Faceplate
12DP7C — Aluminized

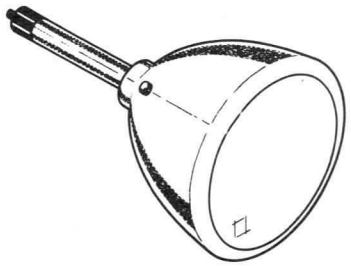

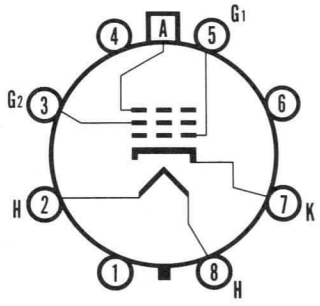

5-AN

SYLVANIA
ELECTRONIC TUBES
A Division of
Sylvania Electric Products Inc.
PICTURE TUBE OPERATIONS
SENECA FALLS, NEW YORK

Prepared and Released By The
TECHNICAL PUBLICATIONS SECTION
EMPORIUM, PENNSYLVANIA

MARCH, 1960

File Under
SPECIAL AND GENERAL PURPOSE
CATHODE RAY TUBES

TYPICAL OPERATING CONDITIONS

Anode Voltage[1]	4,000 Volts	dc
Grid No. 2 Voltage	250 Volts	dc
Grid No. 1 Voltage Required for Cutoff[2]	−25 to −70 Volts	dc
Focusing Coil Current (approx.)[3]	75 to 102 Ma	dc
Line Width A, (12DP7C)[4]	0.50 mm	Max.

CIRCUIT VALUES

Grid No. 1 Resistance	1.5 Megohms	Max.

NOTES:

1. *Brilliance and definition decrease with decreasing anode voltage. In general, the anode voltage should not be less than 4,000 volts.*
2. *Visual extinction of undeflected focused spot.*
3. *For JEDEC focusing coil No. 106 or equivalent with distance from the yoke reference line to center of air gap equal to 4⅛ inches.*
4. *Measured in accordance with MIL-E-1, at an anode current of 200 μa.*

WARNING:

X-ray radiation shielding may be necessary to protect against possible danger of personal injury from prolonged exposure at close range if this tube is operated at higher than the manufacturer's Maximum Rated Anode Voltage or 16,000 volts, whichever is less.

OUTLINE

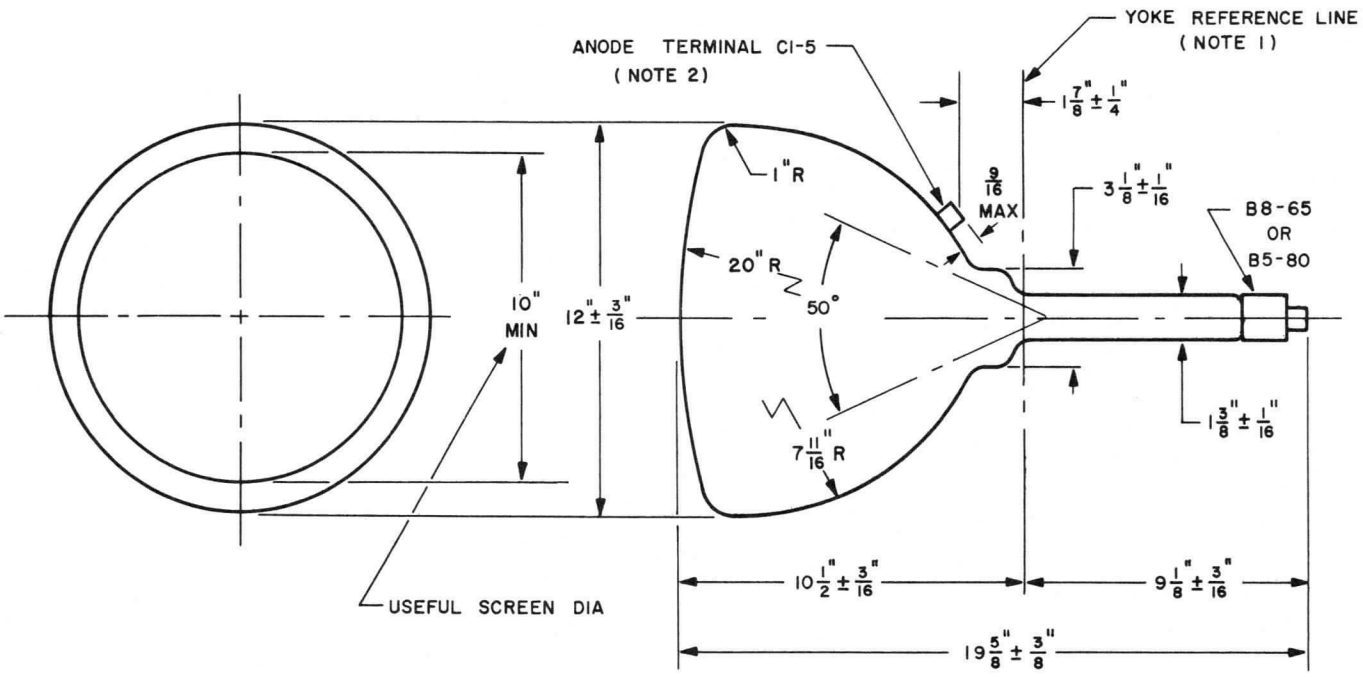

S58063

DIAGRAM NOTES:

1. *Reference line is determined by the plane of the upper edge of the reference line gauge (JEDEC No. 112) when the gauge is resting on the cone.*
2. *Anode Terminal aligns with Pin No. 5 ± 10 degrees and is on same side as Pin No. 5.*

SYLVANIA

engineering data service

SYLVANIA
12KP4A
12KP-A*

CHARACTERISTICS

GENERAL DATA

Focusing Method	Magnetic	
Deflection Method	Magnetic	
Deflection Angle (Approx.)	54	Degrees
Phosphor	Aluminized P4	
Fluorescence	White	
Persistence	Short to Medium	
Faceplate	Gray Filter Glass	
Transmittance (Approx.)	74	Percent

**In addition to the types shown, the 12KP-A can be supplied with several other screen phosphors.*

ELECTRICAL DATA

Heater Voltage	6.3	Volts
Heater Current	0.6 ± 10%	Ampere
Direct Interelectrode Capacitances (Approx.)		
Cathode to All Other Electrodes	5	μμf
Grid No. 1 to All Other Electrodes	6	μμf
External Conductive Coating to Anode[1]	2500	μμf Max.
	500	μμf Min.

MECHANICAL DATA

Minimum Useful Screen Diameter	11¼	Inches
Bulb	J99½A or J99½B	
Bulb Contact (Recessed Small Cavity Cap)	J1-21	
Base (Small Shell Duodecal 5-Pin)	B5-57	
Basing	12N	
Weight (Approx.)	12½	Pounds

RATINGS

MAXIMUM RATINGS (Absolute Maximum Values)

Anode Voltage	13,200	Volts	dc
Grid No. 2 Voltage	450	Volts	dc
Grid No. 1 Voltage			
Negative Bias Value	140	Volts	dc
Positive Bias Value	0	Volts	dc
Positive Peak Value	2	Volts	
Peak Heater-Cathode Voltage			
Heater Negative with Respect to Cathode			
During Warm-up Period Not to Exceed 15 Seconds	450	Volts	
After Equipment Warm-up Period	154	Volts	
Heater Positive with Respect to Cathode	154	Volts	

TYPICAL OPERATING CONDITIONS

Anode Voltage[2]	12,000	Volts	dc
Grid No. 2 Voltage	300	Volts	dc
Grid No. 1 Voltage Required for Cutoff[3]	−33 to −77	Volts	dc
Focusing Coil Current (Approx.)[4]	135	Ma	dc
Spot Position	See Note 5		

CIRCUIT VALUES

Grid No. 1 Circuit Resistance	1.5	Megohms Max.

QUICK REFERENCE DATA

Video Monitor Tube
12" Direct Viewed
Round Glass Type
Magnetic Deflection
Magnetic Focus
External Conductive Coating
Gray Filter Glass Faceplate
Aluminized Screen

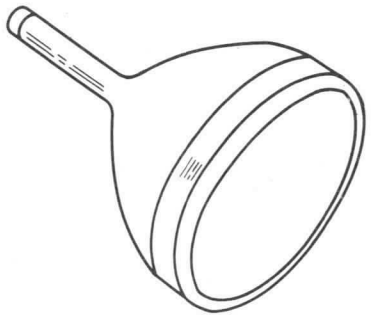

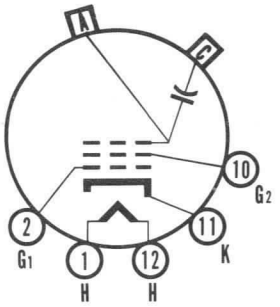

12-N

SYLVANIA ELECTRONIC TUBES
A Division of
SYLVANIA ELECTRIC PRODUCTS, Inc.
PICTURE TUBE
OPERATIONS
SENECA FALLS, NEW YORK

Prepared and Released By The
TECHNICAL PUBLICATIONS SECTION
EMPORIUM, PENNSYLVANIA

DECEMBER 1958

NOTES:

1. *External conductive coating must be grounded.*
2. *Brilliance and definition decrease with decreasing anode voltage. In general, the anode voltage should not be less than 9,000 volts.*
3. *Visual extinction of undeflected focused spot.*
4. *For JETEC Focusing Coil No. 106 positioned with center line of air gap 3¼ inches from reference line (See Outline Drawing). The indicated current is for condition with combined Grid No. 1 bias voltage and video signal voltage adjusted to produce a highlight brightness of 35 foot-lamberts on a 10½" x 7¾" picture area, and sharply focused at the center of the screen.*
5. *The center of the undeflected, unfocused spot will fall within a circle having 20 mm radius concentric with the center of the tube face.*

WARNING:

X-ray radiation shielding may be necessary to protect against danger of personal injury from prolonged exposure at close range if this tube is operated at higher than the manufacturer's Maximum Rated Anode Voltage or 16,000 volts, whichever is less.

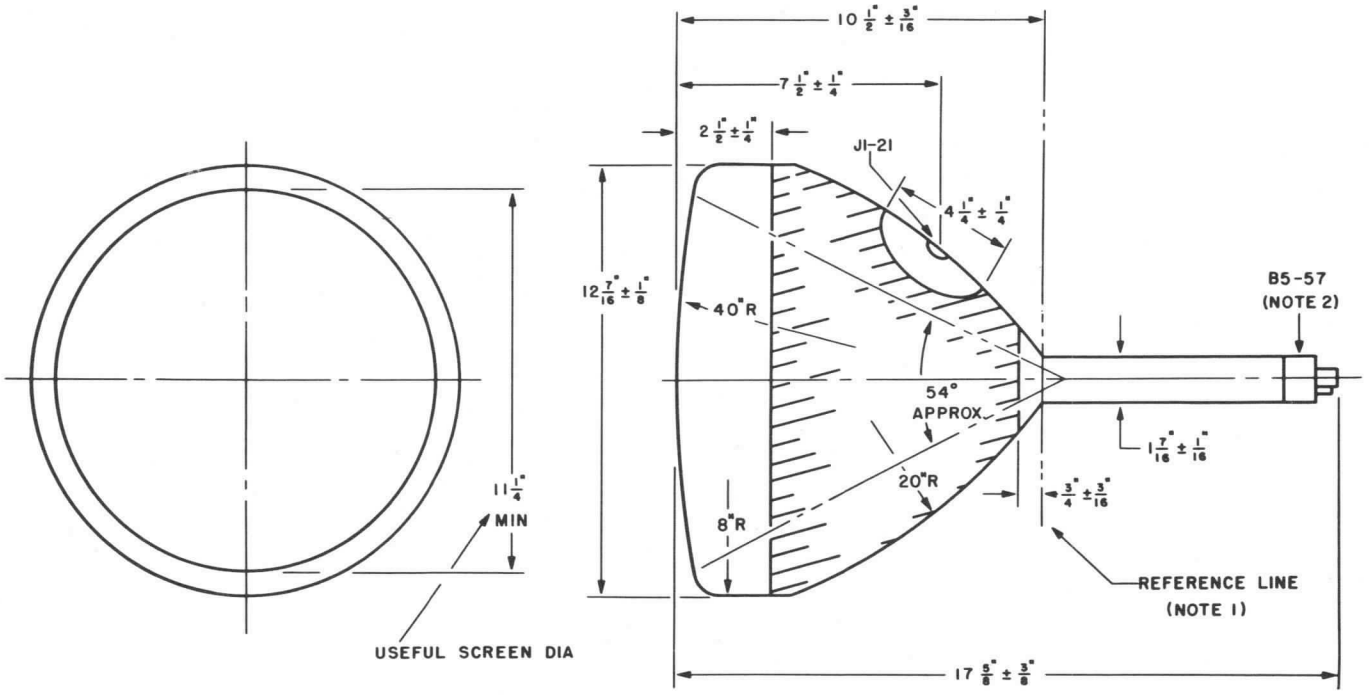

DIAGRAM NOTES:

1. *Reference line is determined by plane of upper edge of JETEC No. 112 reference line gauge, when the gauge is seated against the bulb.*
2. *Vacant pin position No. 3 aligns with anode contact cap (J1-21) within 30 degrees.*

SYLVANIA

engineering data service

SYLVANIA
12SP7
12SP7B
12SP7D

CHARACTERISTICS

GENERAL DATA

Focusing Method	Magnetic	
Deflection Method	Magnetic	
Deflection Angle (Approx.)	54	Degrees
Phosphor	P7	
Fluorescence	Blue-White	
Phosphorescence	Yellow	
Persistence	Long	
Faceplate	Gray Filter Glass	
Light Transmittance (Approx.)	74	Percent

In addition to the type shown the 12SP- can be supplied with several other screen phosphors.

ELECTRICAL DATA

Heater Voltage	6.3	Volts
Heater Current	0.6 ± 10%	Ampere
Direct Interelectrode Capacitances (Approx.)		
Cathode to All Other Electrodes	5	μμf
Grid No. 1 to All Other Electrodes — 12SP7D	8	μμf
Grid No. 1 to All Other Electrodes — 12SP7, 12SP7B	6	μμf

MECHANICAL DATA

Minimum Useful Screen Diameter	11	Inches
Bulb	J99½A or Equivalent	
Bulb Contact (Recessed Small Cavity Cap)	J1-21	
Base (Small Shell Dudecal 5-Pin)	B5-57	
Basing	12D	

RATINGS

MAXIMUM RATINGS (Absolute Maximum Values)

	12SP7	12SP7B	12SP7D		
Anode Voltage	11,000	11,000	15,000	Volts	dc
Grid No. 2 Voltage	450	550	770	Volts	dc
Grid No. 1 Voltage					
Negative Bias Value	140	140	200	Volts	dc
Positive Bias Value	0	0	0	Volts	dc
Positive Peak Value	2	2	2	Volts	
Peak Heater-Cathode Voltage					
Heater Negative with Respect to Cathode	150	200	200	Volts	
Heater Positive with Respect to Cathode	150	200	200	Volts	

TYPICAL OPERATING CONDITIONS

Anode Voltage[1]	9000	Volts	dc
Grid No. 2 Voltage	250	Volts	dc
Grid No. 1 Voltage Required for Cutoff[2]	-27 to -63	Volts	dc
Focusing Coil Current (Approx.)[3]	110	Ma	dc
Line Width A[4] — 12SP7D Only	0.38	MM	Max.
Spot Position[4]	20	MM	Max.

CIRCUIT VALUES

Grid No. 1 Circuit Resistance	1.5	Megohms Max.

QUICK REFERENCE DATA

Radar Indicator Tube
12" Direct Viewed
Round Glass Type
Spherical Faceplate
Gray Filter Glass
Magnetic Deflection
Magnetic Focus
Aluminized Screen
(12SP7B - 12SP7D)
Non-Aluminized (12SP7)

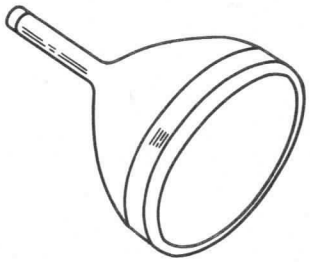

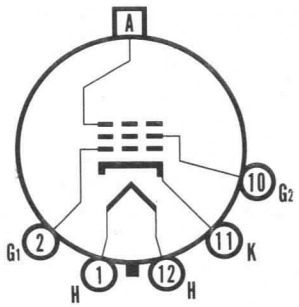

12-D

SYLVANIA
ELECTRONIC TUBES
A Division of
Sylvania Electric Products Inc.
PICTURE TUBE OPERATIONS
SENECA FALLS, NEW YORK

Prepared and Released By The
TECHNICAL PUBLICATIONS SECTION
EMPORIUM, PENNSYLVANIA

JUNE, 1961

File Under
SPECIAL AND GENERAL PURPOSE
CATHODE RAY TUBES

NOTES:

1. *Brightness and focus quality decrease with decreasing anode voltage. In general, the anode voltage should not be less than 4000 volts.*
2. *For visual extinction of undeflected focused spot.*
3. *For RETMA focusing coil No. 106 with distance from the yoke reference line to center of air gap equal to 3¼ inches.*
4. *Measured by compressed raster method of an anode current at 200 micro-amperes.*
5. *The center of the undeflected, unfocused spot will fall within a circle of 20 mm radius concentric with the tube face.*

WARNING:

X-Ray radiation shielding may be necessary to protect against possible dange of personal injury from prolonged exposure at close range if this tube is operated at higher than the manufacturer's Maximum Rated Anode Voltage or 16,000 volts, whichever is less.

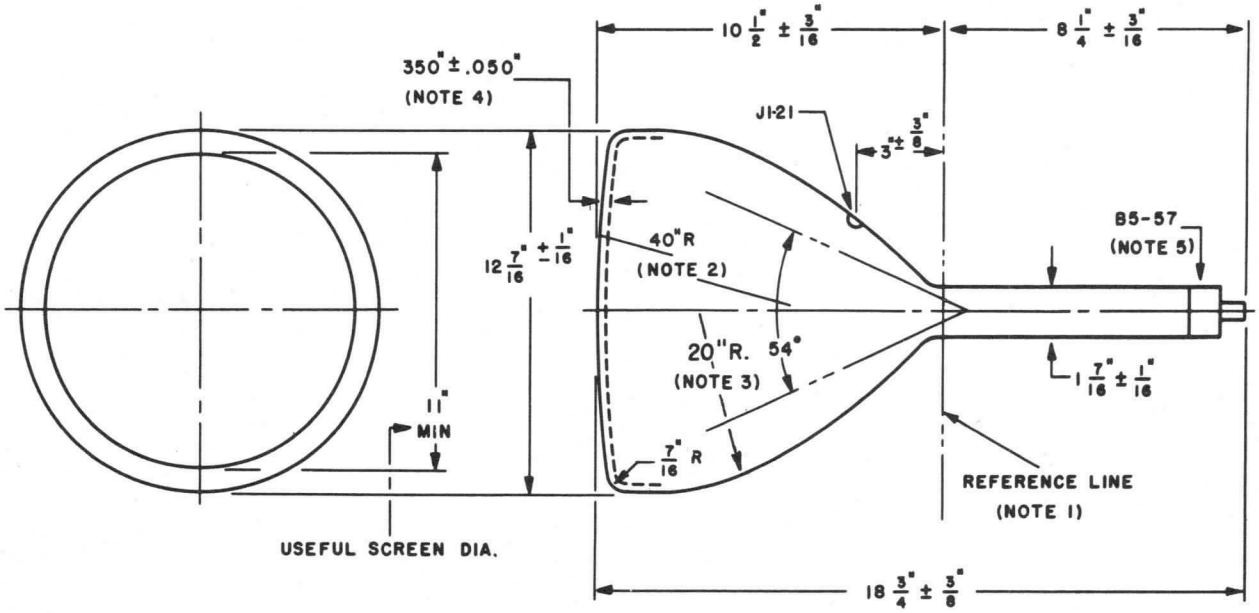

DIAGRAM NOTES:

1. *Reference line is determined by the plane of the upper edge of the reference line gauge (JEDEC No. 112) when the gauge is seated against the glass cone.*
2. *To meet requirements of faceplate contour gauge shown. (12SP7D only)*
3. *To meet requirements of bulb contour gauge shown. (12SP7D only)*
4. *Faceplate thickness over entire useful screen area. (12SP7D only)*
5. *Base Pin Position No. 3 aligns with anode Contact (J1-21), within 10 degrees.*

FACEPLATE CONTOUR GAUGE
(12SP7D — Only)

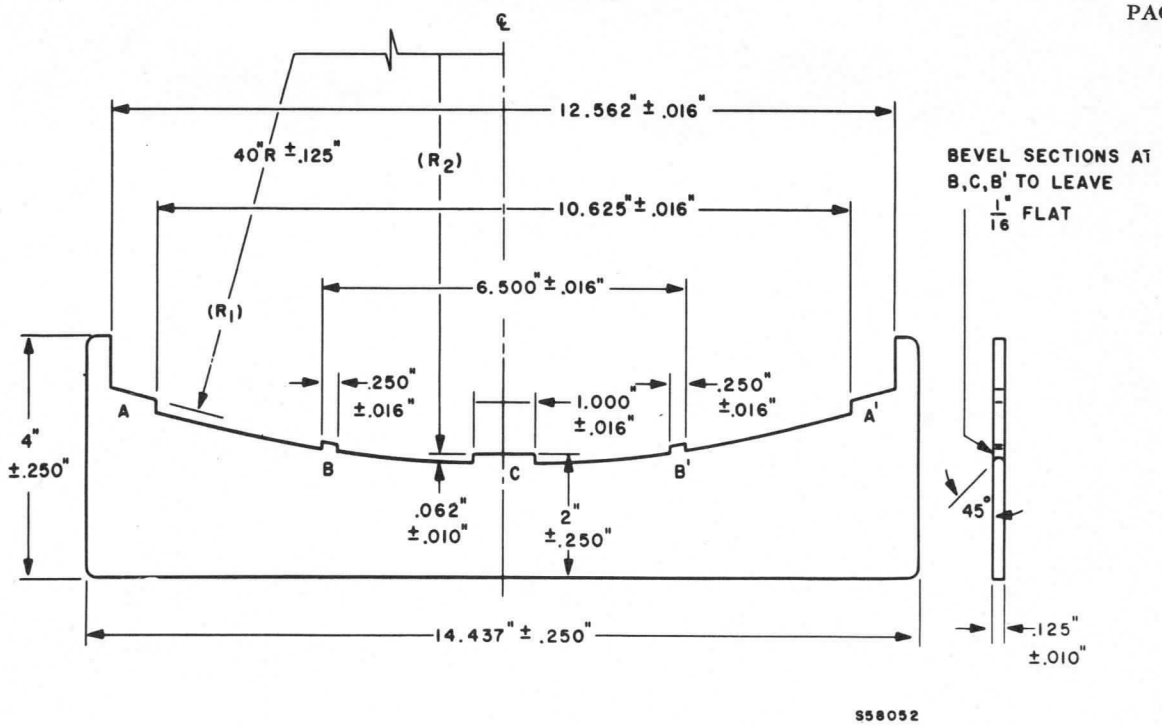

S58052

R2 shall be equal to the Absolute Value of R1 + .050" ± .002" / .000"

The contour of the Bulb Face shall be checked with this Gauge at two orientations approximately 90 degrees apart. The gap between the bulb face and gauge points B, B1, or C shall not exceed 0.100", and the bulb shall seat on steps A and A1.

BULB CONTOUR GAUGE
(12SP7D — Only)

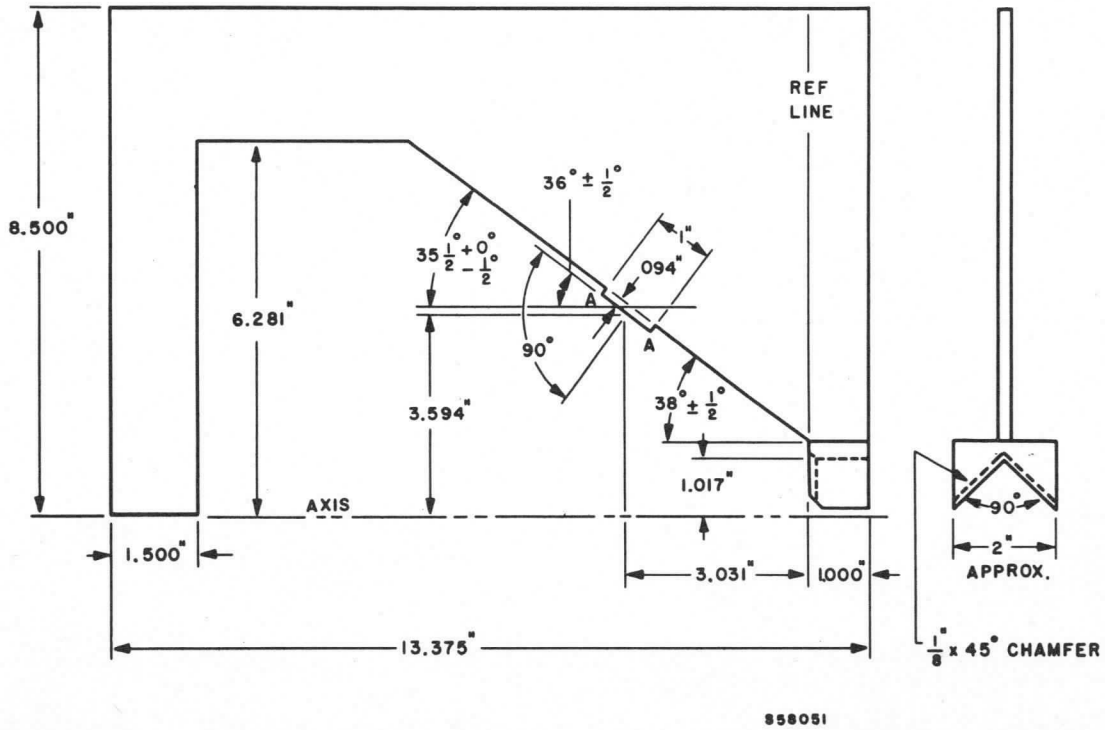

S58051

With the Bulb Neck seated in V-Blocks, the bulb shall rest on flat A-A.

CHARACTERISTICS

GENERAL DATA

Focusing Method	Electrostatic
Deflection Method	Magnetic
Deflection Angles (Approx.)	
Horizontal	65 Degrees
Vertical	50 Degrees
Diagonal	70 Degrees
Phosphor	Aluminized P4
Fluorescence	White
Persistence	Short to Medium
Faceplate	Gray Filter Glass
Light Transmittance (Approx.)	76 Percent

ELECTRICAL DATA

Heater Voltage	6.3 Volts	
Heater Current	0.6 ± 10% Ampere	
Direct Interelectrode Capacitances (Approx.)		
Cathode to All Other Electrodes	5 $\mu\mu$f	
Grid No. 1 to All Other Electrodes	6.5 $\mu\mu$f	
External Conductive Coating to Anode[1]	2000 $\mu\mu$f	Max.
	750 $\mu\mu$f	Min.

MECHANICAL DATA

Minimum Useful Screen Dimensions	11½ x 8⅜ Inches
Minimum Useful Screen Area	96 Sq. Inches
Overall Length	16¾ Inches
Neck Length	7½ Inches
Bulb Contact (Recessed Small Cavity Cap)	J1-21
Bulb	J109½ A1 or J109½ C1
Base (Small Shell Duodecal 6-Pin)	B6-63
Basing	12L
Weight (Approx.)	11 Pounds

RATINGS

MAXIMUM RATINGS (Design Maximum Values)

Anode Voltage	22,000 Volts	dc
Grid No. 4 Voltage (Focusing Electrode)	800 Volts	dc
Grid No. 2 Voltage	700 Volts	dc
Grid No. 1 Voltage		
Negative Bias Value	180 Volts	dc
Positive Bias Value	0 Volts	dc
Positive Peak Value	2 Volts	
Peak Heater-Cathode Voltage		
Heater Negative with Respect to Cathode		
During Warm-up Period not to Exceed 15 Seconds	450 Volts	
After Equipment Warm-up Period	200 Volts	
Heater Positive with Respect to Cathode	200 Volts	

TYPICAL OPERATING CONDITIONS

Anode Voltage	18,000 Volts	dc
Grid No 4 Voltage for Focus	0 to +400 Volts	dc
Grid No. 2 Voltage	300 Volts	dc
Grid No. 1 Voltage Required for Cutoff[2]	−35 to −72 Volts	dc

CIRCUIT VALUES

Grid No. 1 Circuit Resistance	1.5 Megohms Max.

QUICK REFERENCE DATA

Television Monitor Tube
14" Direct Viewed
Rectangular Glass Type
Spherical Faceplate
Magnetic Deflection
Electrostatic Focus
No Ion Trap
External Conductive Coating
Aluminized Screen
High Resolution

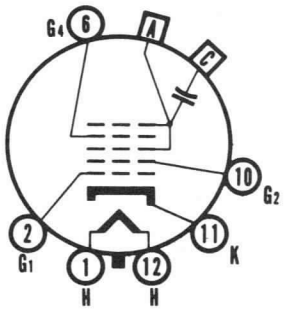

12-L

SYLVANIA
ELECTRONIC TUBES

A Division of
Sylvania Electric Products Inc.

PICTURE TUBE OPERATIONS
SENECA FALLS, NEW YORK

Prepared and Released By The
TECHNICAL PUBLICATIONS SECTION
EMPORIUM, PENNSYLVANIA

DECEMBER, 1961

File Under
SPECIAL AND GENERAL PURPOSE
CATHODE RAY TUBES

NOTES:

1. *External conductive coating must be grounded.*
2. *Visual extinction of focused raster. Extinction of stationary focused spot will require that these values be about 5 volts more negative.*

OUTLINE

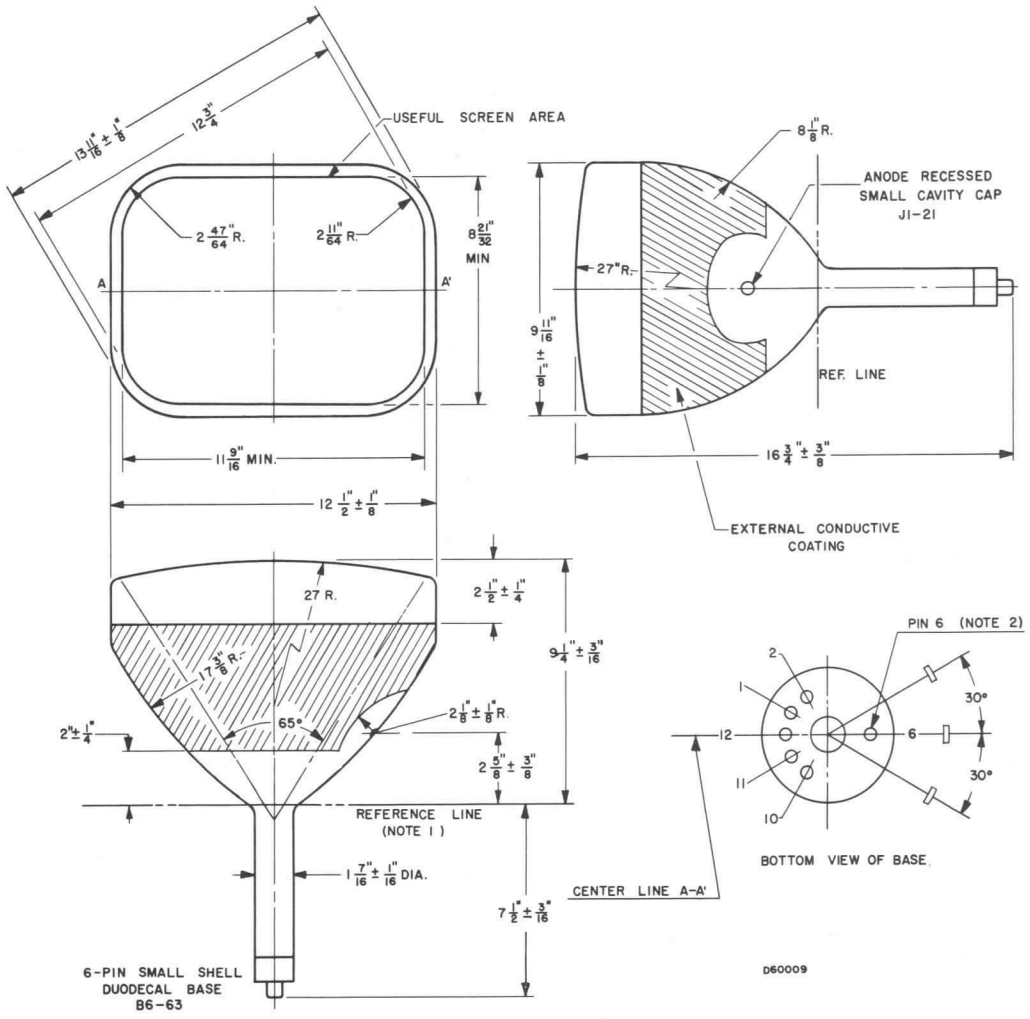

DIAGRAM NOTES:

1. *With the tube neck inserted through the flared end of Reference-Line Gauge (JEDEC No. 110) and with the tube seated in the gauge, the reference line is determined by the intersection of the plane C-C' (face of the flared end) of the gauge with the glass funnel.*
2. *The plane through the tube axis and the base pin No. 6 may vary from the plane through the tube axis and the bulb terminal by an angular tolerance of ±30° measured about the tube axis. The bulb terminal is on the same side of the tube as pin No. 6.*

CHARACTERISTICS

GENERAL DATA

Focusing Method	Electrostatic
Deflecting Method	Electrostatic
Phosphor*	P7
Fluorescence	Blue-White
Phosphorescence	Yellow
Persistence	Long
Faceplate	Gray Filter Glass
Transmittance (Approx.)	76 Percent

*In addition to the P7 screen shown, the 16AMP7 can be supplied with several other screen phosphors.

ELECTRICAL DATA

Heater Voltage	6.3 Volts
Heater Current	0.6 ± 10 % Amperes
Direct Interelectrode Capacitances (Approx.)	
Cathode to All Other Electrodes	7 μμf
Grid No. 1 to All Other Electrodes	8 μμf
Between Deflecting Plates 1-2	4 μμf
Between Deflecting Plates 3-4	3 μμf
Deflecting Plate 1 to All Other Electrodes	12.5 μμf
Deflecting Plate 2 to All Other Electrodes	12.5 μμf
Deflecting Plate 3 to All Other Electrodes	8.5 μμf
Deflecting Plate 4 to All Other Electrodes	8.5 μμf

MECHANICAL DATA

Minimum Useful Screen Diameter	15 Inches
Bulb Contact (Recessed Small Cavity Cap)	J1-21
Neck Contacts (Small Ball)	J1-25
Bulb	C129 Exp. 14 or Equiv.
Base (Medium Shell Diheptal 12-Pin)	B12-37
Basing	14Q
Weight (Approx.)	20 Pounds
J1-21 Contact Aligns with Trace D3-D4	±10 Degrees
J1-21 Contact Aligns with Pin No. 11	
J1-25 Contact (A2) Aligns with D1-D2 Trace	±2 ½ Degrees
D3-D4 Trace Aligns with Pin No. 11	±10 Degrees
Positive Voltage on D1 Deflects Beam Approx. Toward Pin No. 8	
Positive Voltage on D3 Deflects Beam Approx. Toward Pin No. 4	
Angle Between D1-D2 and D3-D4 Traces	90 ± 1 Degrees

RATINGS

MAXIMUM RATINGS (Absolute Maximum Ratings)

Anode Input[1]	6 Watts	
Anode No. 3 (Post Accelerator) Voltage	17,600 Volts	dc
Anode No. 2 Voltage	8800 Volts	dc
Anode No. 1 (Focusing Electrode) Voltage	3300 Volts	dc
Grid No. 1 Voltage		
Negative Bias Value	330 Volts	dc
Positive Bias Value	0 Volts	dc
Positive Peak Value	2 Volts	
Peak Heater-Cathode Voltage		
Heater Negative with Respect to Cathode	200 Volts	
Heater Positive with Respect to Cathode	200 Volts	
Peak Voltage Between Anode No. 2 and Any Deflecting Plate	1650 Volts	
Ratio Post Accelerator Voltage to Anode Voltage	2:1	

QUICK REFERENCE DATA

Oscilloscope Tube
16″ Direct Viewed
Round Glass Type
Electrostatic Deflection
Electrostatic Focus
Post Deflection Acceleration
Aluminized Screen

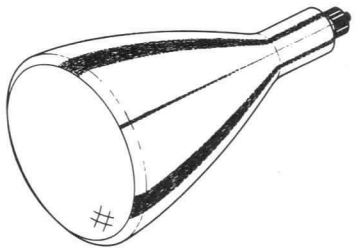

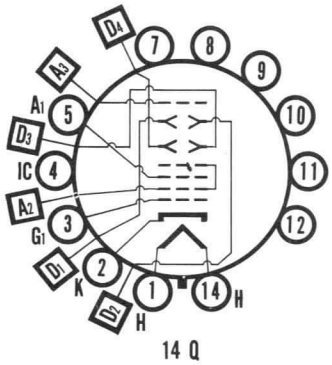

14 Q

SYLVANIA ELECTRIC PRODUCTS INC.

Electronic Components Group
ELECTRONIC TUBE DIVISION
SENECA FALLS, NEW YORK

A Technical Publication

JULY, 1965

File Under

SPECIAL AND GENERAL PURPOSE CATHODE RAY TUBES

TYPICAL OPERATING CONDITIONS

Anode No. 3 (Post Accelerator) Voltage	12,000 Volts	dc
Anode No. 2 Voltage	7500 Volts	dc
Anode No. 1 Voltage for Focus	1760 – 2670 Volts	dc
Grid No. 1 Voltage Required for Cutoff[2]	−160 to −240 Volts	dc
Deflection Factors[3]		
Deflecting Plates 1-2	96 to 150 Volts	dc/Inch
Deflecting Plates 3-4	96 to 150 Volts	dc/Inch
Modulation[4]	37 Volts	Max.
Line Width "A"[4]	.5 mm	
Focus Electrode Current[4]	−25 to +25 μa	dc
Spot Position, Undeflected	Within 20 mm	Square

CIRCUIT VALUES

Grid No. 1 Circuit Resistance	1.5 Megohms Max.
Resistance in Any Deflection Plate Circuit	5.0 Megohms Max.

NOTES:

1. *Anode input equals the product of Anode No. 2 voltage and average Anode No. 2 current.*
2. *For visual extinction of undeflected focused spot.*
3. *Deflection Plates 1 and 2 are nearer the screen.*
4. *Measured in accordance with MIL-E-1 specification at a post accelerator current (Ia3) equal to 25 μa.*

X-RAY WARNING:

X-ray radiation shielding may be necessary to protect against possible danger of personal injury from prolonged exposure at close range if this tube is operated at higher than the manufacturer's maximum anode voltage or 16,000 volts, whichever is less.

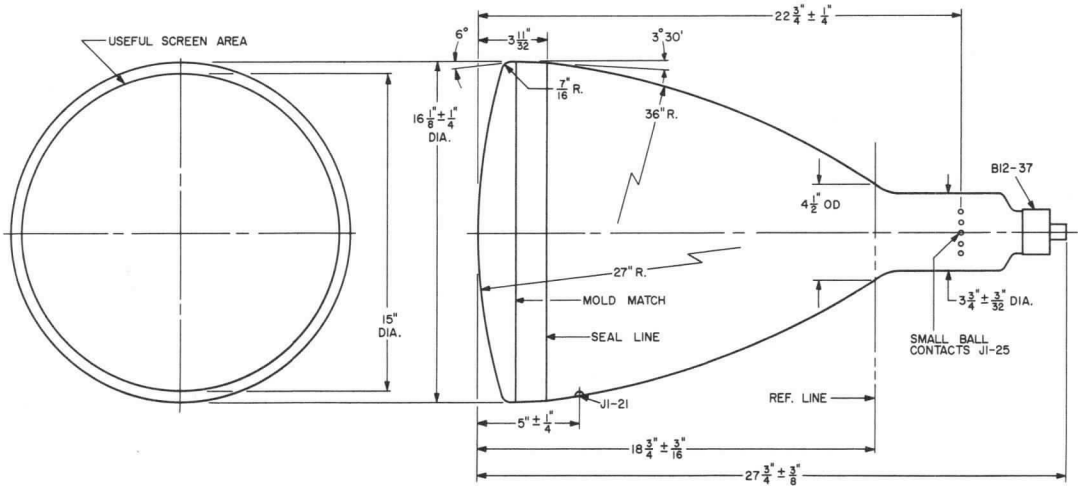

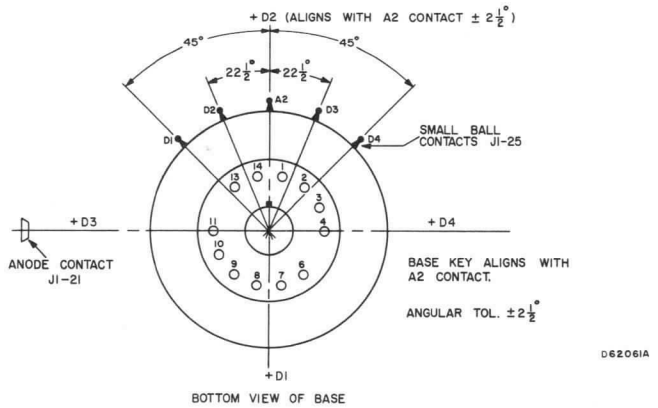

CHARACTERISTICS

GENERAL DATA

Focusing Method	Electrostatic
Deflecting Method	Magnetic
Deflecting Angles (Approx.)	
Vertical	50 Degrees
Horizontal	65 Degrees
Diagonal	70 Degrees
Phosphor	Aluminized, P4
Fluorescence	White
Persistence	Short to Medium
Faceplate	Gray Filter Glass
Light Transmittance (Approx.)	74 Percent

ELECTRICAL DATA

Heater Voltage	6.3 Volts	
Heater Current	0.6 ± 5% Ampere	
Direct Interelectrode Capacitances (Approx.)		
Cathode to All Other Electrodes	5 $\mu\mu$f	
Grid No. 1 to All Other Electrodes	6.5 $\mu\mu$f	
External Conductive Coating to Anode[1]	1500 $\mu\mu$f	Max.
	750 $\mu\mu$f	Min.

MECHANICAL DATA

Maximum Useful Screen Dimensions	11⅛ x 14 5/16 Inches
Minimum Useful Screen Area	149 Sq. Inches
Bulb Contact (Recessed Small Cavity Cap)	J1-21
Bulb	J133B or J133D
Base (Small Shell Duodecal 6-Pin)	B6-63
Basing	12L

RATINGS

MAXIMUM RATINGS (Absolute Maximum Values)

Anode Voltage	22,000 Volts	dc
Grid No. 4 (Focusing Electrode)		
Voltage	−550 to +1100 Volts	dc
Grid No. 2 Voltage	700 Volts	dc
Grid No. 1 Voltage		
Negative Bias Value	180 Volts	dc
Negative Peak Value	220 Volts	dc
Positive Bias Value	0 Volts	
Positive Peak Value	2	
Peak Heater-Cathode Voltage	Volts	
Heater Negative with Respect to Cathode		
During Warm-up Period not to Exceed 15 Seconds	450 Volts	
After Equipment Warm-up Period	200 Volts	
Heater Positive with Respect to Cathode	200 Volts	

TYPICAL OPERATING CONDITIONS (Grid Drive Service)

Anode Voltage	18,000 Volts	dc
Grid No. 4 Voltage for Focus	0 to 400 Volts	dc
Grid No. 2 Voltage	300 Volts	dc
Grid No. 1 Voltage Required for Cutoff[2]	−35 to −72 Volts	dc

QUICK REFERENCE DATA

Television Monitor Tube
17″ Direct Viewed
Rectangular Glass Type
Gray Filter Glass
Magnetic Deflection
Low Voltage Electrostatic Focus
No Ion Trap Required
External Conductive Coating
Spherical Faceplate
Aluminized Screen
High Resolution

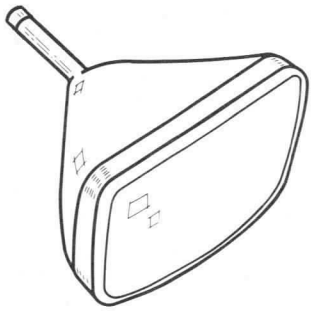

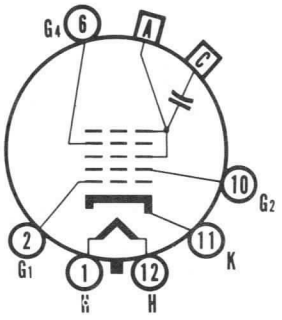

12-L

SYLVANIA
ELECTRONIC TUBES
A Division of
Sylvania Electric Products Inc.
PICTURE TUBE OPERATIONS
SENECA FALLS, NEW YORK

Prepared and Released By The
TECHNICAL PUBLICATIONS SECTION
EMPORIUM, PENNSYLVANIA

JULY, 1960

File Under
SPECIAL AND GENERAL PURPOSE
CATHODE RAY TUBES

CIRCUIT VALUES

Grid No. 1 Circuit Resistance . . . . . 1.5 Megohms Max.

NOTES:

1. *External conductive coating must be grounded.*
2. *Visual extinction of focused raster. Extinction of stationary focused spot will require that these values be about 5 volts more negative.*

WARNING:

X-ray radiation shielding may be necessary to protect against possible danger of personal injury from prolonged exposure at close range if this tube is operated at higher than the manufacturer's Maximum Rated Anode Voltage or 16,000 volts, whichever is less.

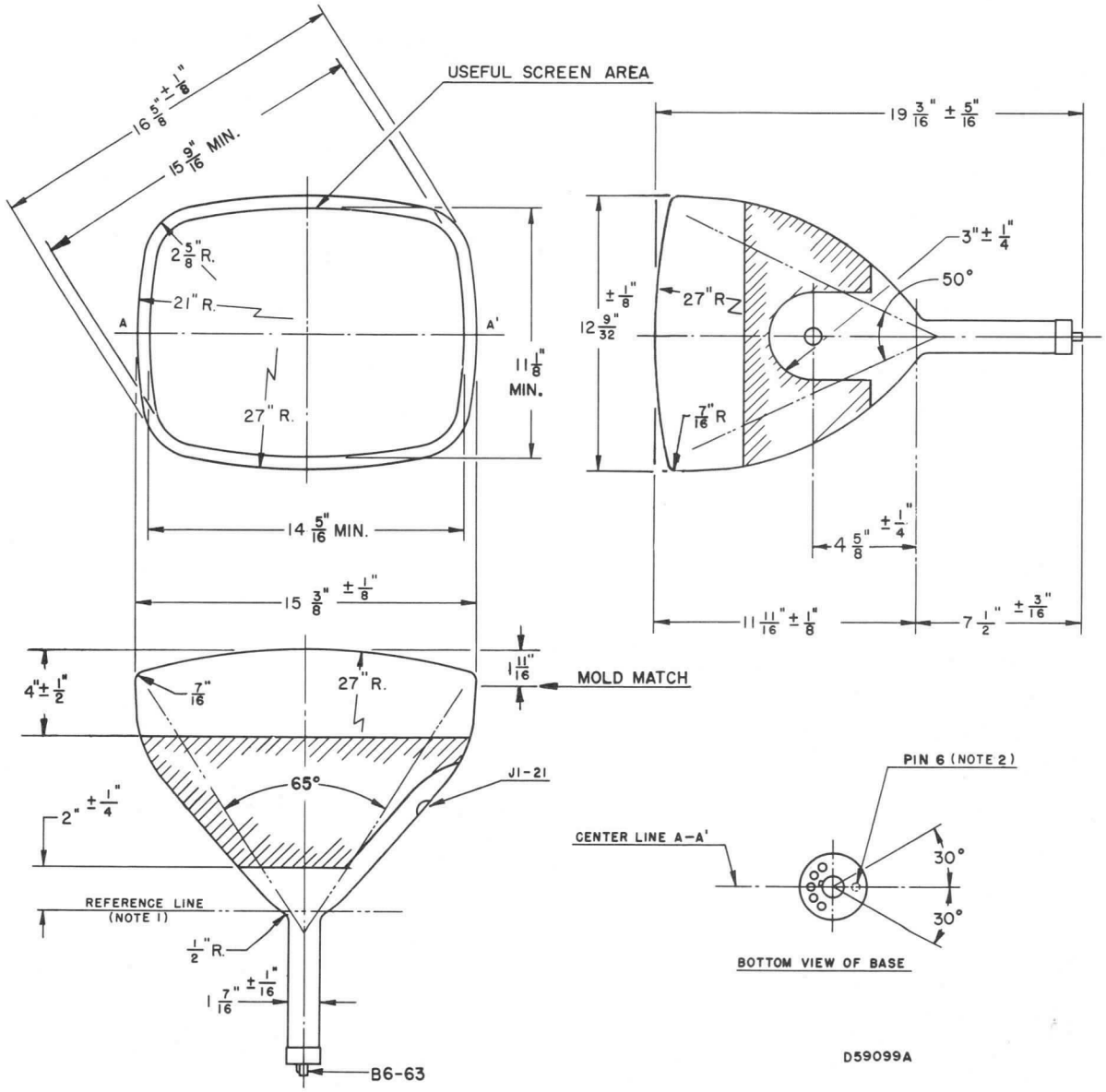

DIAGRAM NOTES:

1. *Reference line is determined by the plane of the upper edge of the reference line gauge (JEDEC No. 110) when the gauge is seated on the glass cone.*
2. *Pin #6 aligns with horizontal centerline within 30° and is on same side as anode contact (J1-21).*

CHARACTERISTICS

GENERAL DATA

Focusing Method	Electrostatic	
Deflection Method	Magnetic	
Deflection Angles (Approx.)		
Vertical	53	Degrees
Horizontal	67	Degrees
Diagonal	72	Degrees
Phosphor	P4	
Fluorescence	White	
Persistence	Short to Medium	
Faceplate	Gray Filter Glass	
Light Transmittance (Approx.)	75	Percent

ELECTRICAL DATA

Heater Voltage	6.3	Volts	
Heater Current	0.6 ± 5%	Ampere	
Direct Interelectrode Capacitances (Approx.)			
Cathode to All Other Electrodes	5	μμf	
Grid No. 1 to All Other Electrodes	6.5	μμf	
External Conductive Coating to Anode[1]	1500	μμf	Max.
	1200	μμf	Min.

MECHANICAL DATA

Minimum Useful Screen Dimensions	19 1/16 x 15 1/16	Inches
Minimum Useful Screen Area	262	Sq. Inches
Bulb	J171B or J171F	
Bulb Contact (Recessed Small Cavity Cap)	J1-21	
Base (Small Shell Duodecal 6-Pin)	B6-63	
Basing	12L	

RATINGS

MAXIMUM RATINGS (Absolute Maximum Values)

Anode Voltage	22,000	Volts	dc
Grid No. 4 (Focusing Electrode) Voltage	−550 to +1100	Volts	dc
Grid No. 2 Voltage	700	Volts	dc
Grid No. 1 Voltage			
Negative Bias Value	180	Volts	dc
Negative Peak Value	220	Volts	
Positive Bias Value	0	Volts	dc
Positive Peak Value	2	Volts	
Peak Heater-Cathode Voltage			
Heater Negative with Respect to Cathode			
During Warm-up Period Not to Exceed 15 Seconds	450	Volts	
After Equipment Warm-up Period	200	Volts	
Heater Positive with Respect to Cathode	200	Volts	

TYPICAL OPERATING CONDITIONS (Grid Drive Service)

Anode Voltage	18,000	Volts	dc
Grid No. 4 Voltage for Focus	0 to +400	Volts	dc
Grid No. 2 Voltage	300	Volts	dc
Grid No. 1 Voltage Required for Cutoff[2]	−35 to −72	Volts	dc

CIRCUIT VALUES

Grid No. 1 Circuit Resistance	1.5	Megohms Max.

NOTES:

1. *External conductive coating must be grounded.*
2. *Visual extinction of focused raster. Extinction of the stationary focused spot will require that these values be about 5 volts more negative.*

QUICK REFERENCE DATA

Television Monitor Tube
21" Direct Viewed
Rectangular Glass Type
Spherical Faceplate
Gray Filter Glass
Magnetic Deflection
Low Voltage Electrostatic Focus
No Ion Trap
High Resolution
Aluminized Screen
External Conductive Coating

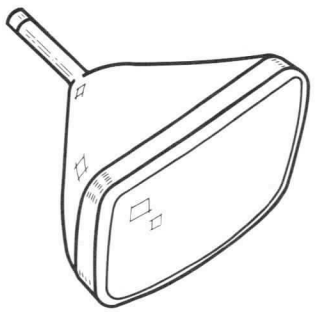

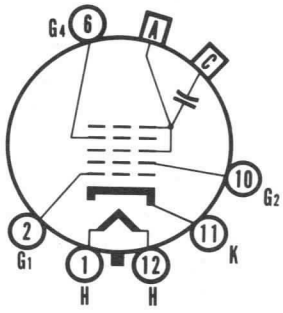

12-L

SYLVANIA
ELECTRONIC TUBES
A Division of
Sylvania Electric Products Inc.
PICTURE TUBE OPERATIONS
SENECA FALLS, NEW YORK

Prepared and Released By The
TECHNICAL PUBLICATIONS SECTION
EMPORIUM, PENNSYLVANIA

FEBRUARY, 1961

File Under
SPECIAL AND GENERAL PURPOSE
CATHODE RAY TUBES

WARNING:

X-ray radiation shielding may be necessary to protect against possible danger of personal injury from prolonged exposure at close range if this tube is operated at higher than the manufacturer's Maximum Rated Anode Voltage or 16,000 volts, whichever is less.

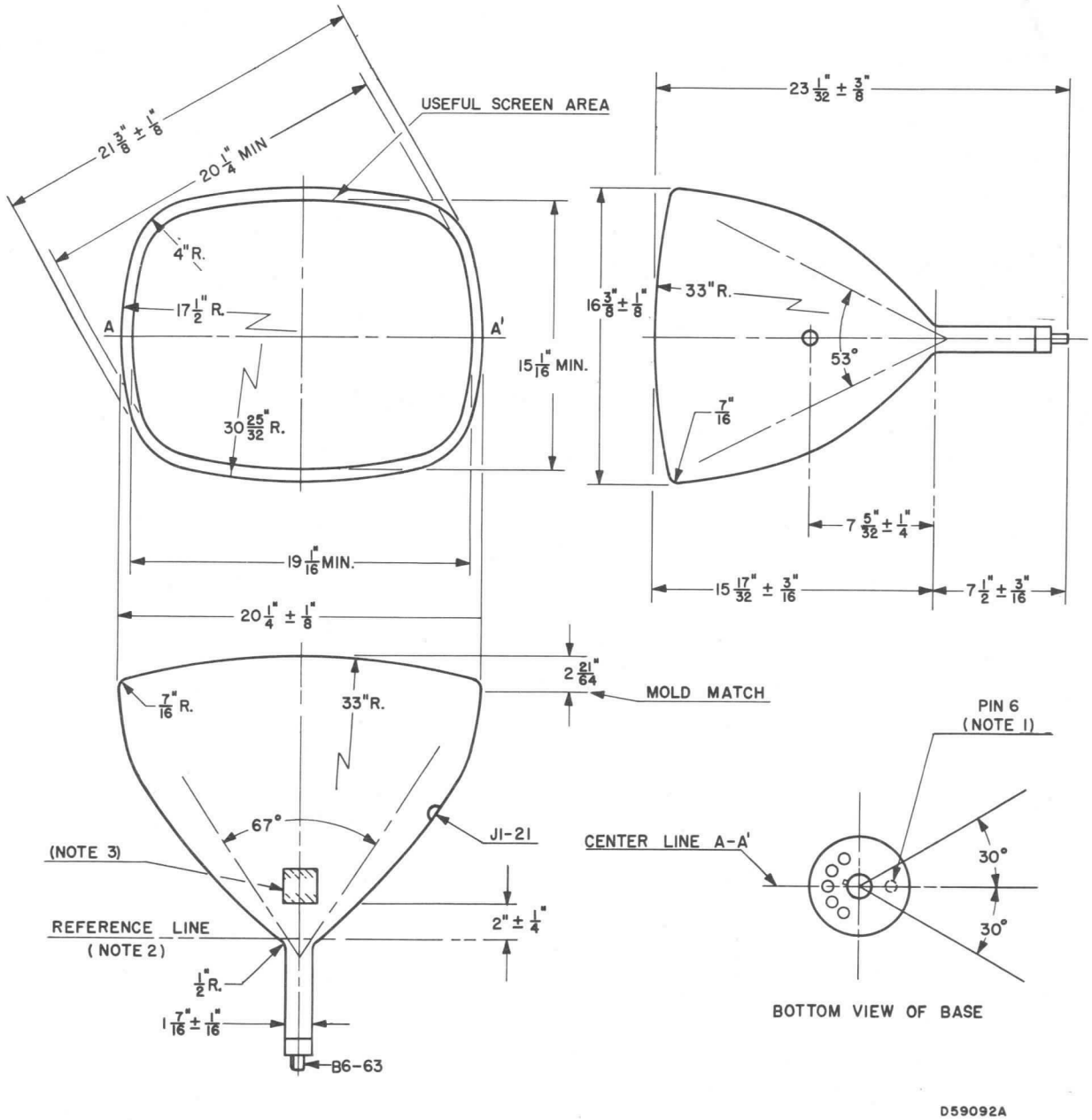

DIAGRAM NOTES:

1. *Pin No. 6 aligns with horizontal centerline within 30° and is on same side as anode contact (J1-21).*
2. *With the tube neck inserted through the flared end of Reference-Line Gauge (JEDEC No. 110) and with the tube seated in the gauge, the reference line is determined by the intersection of the plane cc' (face of the flared end) of the gauge with the glass funnel.*
3. *Contact area of external conductive coating 2" min. x 2" min. located 2" ± ¼" from reference line 90° counterclockwise from anode button as viewed from base end of tube.*

CHARACTERISTICS

GENERAL DATA

Focusing Method	Electrostatic
Deflecting Method	Electrostatic
Phosphor*	P7
Fluorescence	Blue-White
Phosphorescence	Yellow
Persistence	Long
Faceplate	Gray Filter Glass

*In addition to the P7 screen shown, the SC-2558 can be supplied with several other screen phosphors.

ELECTRICAL DATA

Heater Voltage	6.3 Volts
Heater Current	0.6 ± 10% Amperes
Direct Interelectrode Capacitances (Approx.)	
Cathode to All Other Electrodes	10 μμf
Grid No. 1 to All Other Electrodes	8 μμf
Between Deflecting Plates 1-2	4 μμf
Between Deflecting Plates 3-4	2 μμf
Deflecting Plate 1 to All Other Electrodes Except D2	8 μμf
Deflecting Plate 2 to All Other Electrodes Except D1	8 μμf
Deflecting Plate 3 to All Other Electrodes Except D4	6 μμf
Deflecting Plate 4 to All Other Electrodes Except D3	6 μμf

MECHANICAL DATA

Minimum Useful Screen Diameter	11 Inches
Bulb Contact (Recessed Small Cavity Cap)	J1-21
Base (Medium Shell Diheptal 12-Pin)	B12-37
Basing	14J
Weight (Approx.)	12 Pounds
J1-21 Contact Aligns with Trace D1-D2	± 10 Degrees
J1-21 Contact Aligns with Pin No. 5	± 10 Degrees
Positive Voltage on D1 Deflects Beam Approx. Toward Pin No. 5	
Positive Voltage on D3 Deflects Beam Approx. Toward Pin No. 1	

RATINGS

MAXIMUM RATINGS (Absolute Maximum Values)

Anode Input[1]	6 Watts
Anode No. 3 Voltage	12,000 Volts dc
Anode No. 2 Voltage	6,000 Volts dc
Anode No. 1 Voltage	2,500 Volts dc
Grid No. 1 Voltage	
Negative Bias Value	200 Volts dc
Positive Bias Value	0 Volts dc
Positive Peak Value	2 Volts
Peak Heater-Cathode Voltage	
Heater Negative with Respect to Cathode	200 Volts
Heater Positive with Respect to Cathode	200 Volts
Peak Voltage Between Anode No. 2 And Any Deflecting Plate	750 Volts
Ratio Post Accelerator Voltage to Anode Voltage	2.3:1

QUICK REFERENCE DATA

Oscilloscope Tube
12" Direct Viewed
Round Glass Type
Electrostatic Deflection
Electrostatic Focus
Post Deflection Acceleration

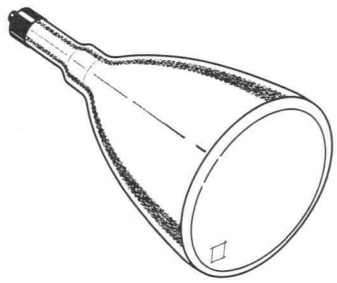

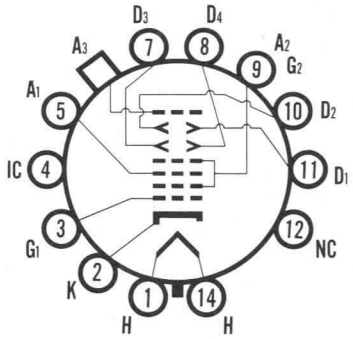

14-J

SYLVANIA
ELECTRONIC TUBES
A Division of
Sylvania Electric Products Inc.
PICTURE TUBE OPERATIONS
SENECA FALLS, NEW YORK

Prepared and Released By The
TECHNICAL PUBLICATIONS SECTION
EMPORIUM, PENNSYLVANIA

JUNE, 1960

File Under
SPECIAL AND GENERAL PURPOSE
CATHODE RAY TUBES

TYPICAL OPERATING CONDITIONS

Anode No. 3 Voltage	10,000 Volts dc
Anode No. 2 Voltage	5,000 Volts dc
Anode No. 1 Voltage for Focus	1300 to 2200 Volts dc
Grid No. 1 Voltage Required for Cutoff[2]	−60 to −100 Volts dc
Deflection Factor[3]	
Deflecting Plates 1-2	105 to 145 Volts dc/Inch
Deflecting Plates 3-4	80 to 115 Volts dc/Inch
Modulation[4]	30 Volts Max.
Line Width "A"[4]	.5 mm
Focus Electrode Current[4]	−15 to +10 μa dc
Spot Position, Undeflected	Within 30 mm Square
Angle Between D1-D2 Trace and D3-D4 Trace	90 ± 2 Degrees

CIRCUIT VALUES

Grid No. 1 Circuit Resistance	1.5 Megohms Max.
Resistance in Any Deflection Plate Circuit	5.0 Megohms Max.

NOTES:

1. *Anode input equals the product of anode No. 2 voltage and average anode No. 2 current.*
2. *For visual extinction of undeflected focused spot.*
3. *Deflection plates 1 and 2 are nearer the screen. Plates 3 and 4 are more sensitive and with post acceleration may produce less than full screen coverage.*
4. *Measured in accordance with MIL-E-1C specification at a post accelerator current (1A3) equal to 25 μa.*

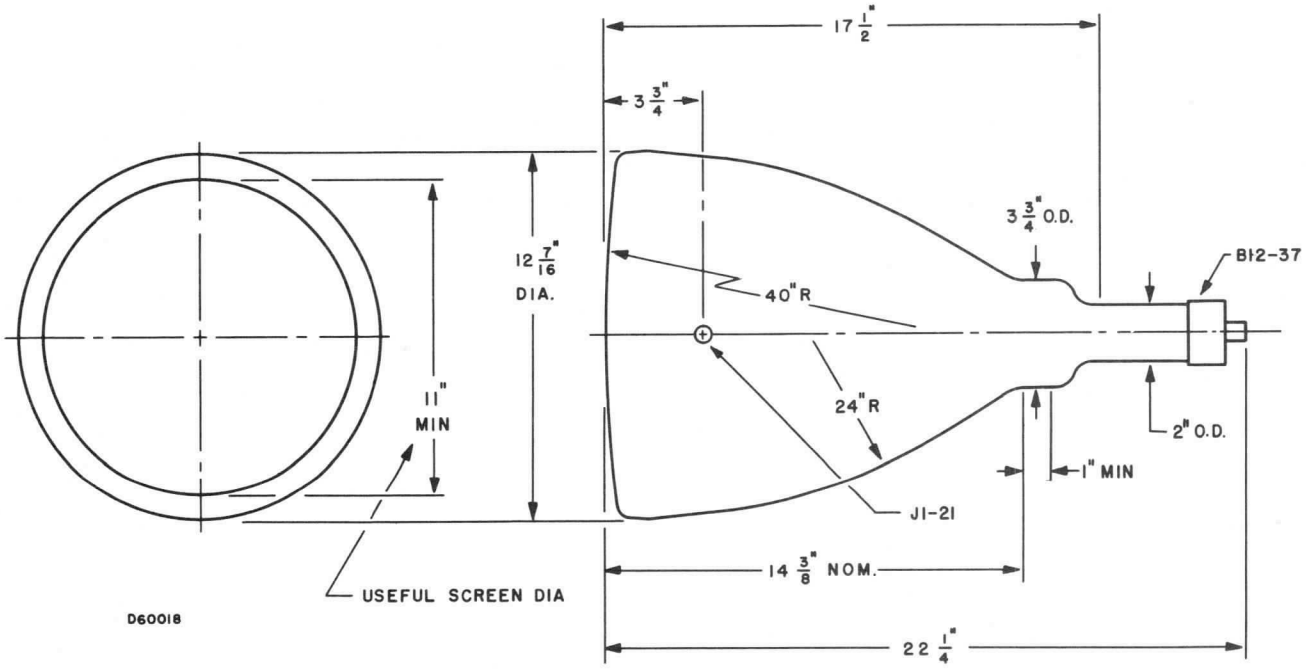

X-RAY WARNING:

X-ray radiation shielding may be necessary to protect against possible danger of personal injury from prolonged exposure at close range if this tube is operated at higher than the manufacturer's maximum anode voltage or 16,000 volts, whichever is less.

DESCRIPTION

The Sylvania Type SC-2751P1B is a compact, rectangular direct view oscilloscope tube designed for portable oscilloscope and radar applications. It features a high efficiency 1.5 v, 140 ma heater for battery economy and lightweight design. The tube is pre-aligned, then potted in its integral magnetic shield with flexible, color coded leads for all tube connections.

CHARACTERISTICS

GENERAL DATA

Focusing Method	Electrostatic
Deflection Method	Electrostatic
Phosphor*	P-1
Fluorescence	Green
Phosphorescence	Green
Persistence	Medium
Faceplate	Flat, Clear

*In addition to the type shown, the SC-2751B can be supplied with several other screen phosphors.

MECHANICAL DATA

Minimum Useful Screen Dimensions	
Horizontal	2¾ Inches
Vertical	1⅛ Inches
Bulb	LEA 448 or Equiv.
Base	B8-181
Basing	Color Coded Leads
Anode No. 2 Contact	J1-22
Angle Between D1-D2 and D3-D4 Trace	90 ± 1 Degree
Angle Between D1-D2 Trace and Major Axis of Tube Face	0 ± 1½ Degrees

Deflection Plates
D1 and D2 are nearer to the tube face
D3 and D4 are nearer the base

Positive Voltage on D1 (Blue Lead) with Respect to D2 will Deflect the Beam Approx. Toward the White Lead

Positive Voltage on D3 (Gray Lead) with Respect to D4 will Deflect the Beam Approx. Toward the Red Lead

ELECTRICAL DATA

Heater Voltage	1.5 Volts
Heater Current	0.140 ± 10 % Ampere
Direct Interelectrode Capacitances (Approx.)[1]	
Grid No. 1 to All Other Electrodes	4.5 pf
Between Deflection Plates 1-2	2.0 pf
Between Deflection Plates 3-4	2.5 pf
Deflection Plate 1 to All Other Electrodes	6.5 pf
Deflection Plate 2 to All Other Electrodes	6.0 pf
Deflection Plate 3 to All Other Electrodes	5.5 pf
Deflection Plate 4 to All Other Electrodes	5.5 pf

RATINGS

MAXIMUM RATINGS (Absolute Maximum Values)

Anode No. 2 Voltage	2750 Volts dc
Anode No. 2 Input	6.0 Watts
Anode No. 1 Voltage (Focusing Electrode)	1100 Volts dc
Grid No. 1 Voltage	
Negative Bias Value	200 Volts dc
Positive Bias Value	0 Volt
Positive Peak Value	2 Volts
Peak Voltage Between Anode No. 2 and Any Deflection Plate	550 Volts
Altitude	35,000 Feet

QUICK REFERENCE DATA

1½" x 3" Direct Viewed
Rectangular Glass Type
Clear, Pressed Faceplate
Electrostatic Deflection
Electrostatic Focus
High Deflection Sensitivity
Very Low Heater Power
Integral, Potted, Magnetic Shield
Flexible Color Coded Leads

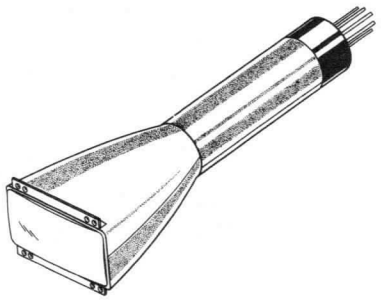

BASE LEADS COLOR CODE

H — Brown
HK — White
G1 — Green
A1 — Red
A2 — Orange
D1 — Blue
D2 — Violet
D3 — Gray
D4 — Black

SYLVANIA ELECTRIC PRODUCTS INC.

Electronic Components Group
ELECTRONIC TUBE DIVISION
SENECA FALLS, NEW YORK

A Technical Publication

JUNE, 1964

File Under
SPECIAL AND GENERAL PURPOSE CATHODE RAY TUBES

TYPICAL OPERATING CONDITIONS

Anode No. 2 Voltage	2000 Volts dc	
Anode No. 1 Voltage for Focus	400 to 700 Volts dc	
Grid No. 1 Voltage Required for Cutoff[2]	−38 to −68 Volts dc	
Deflection Factors		
Deflection Plates 1-2	68 to 92 Volts dc/Inch	
Deflection Plates 3-4	28 to 38 Volts dc/Inch	
Spot Position (Undeflected, Focused)[3]	Within a 15 mm Square	
P1 Light Output[5]	20 Ft. L.	Min.
Modulation[6]	38 Volts dc	Max.
Line Width "A"[7]	0.65 mm	Max.

CIRCUIT VALUES

Grid No. 1 Circuit Resistance	1.5 Megohms	Max.
Deflection Circuit Resistance[4]	1.0 Megohms	Max.

NOTES:

1. *Exclusive of the potted color coded leads.*
2. *Visual extinction of undeflected focused spot.*
3. *With the deflection plates connected to Anode No. 2. The square shall be centered on the tube face with its sides parallel to the deflection axes.*
4. *It is recommended that the deflecting electrode circuit resistances be approximately equal.*
5. *Raster size* $1\frac{1}{8}''$ *x* $1\frac{9}{16}''$.
6. *Measured at 20 Ft. L. on a raster* $1\frac{1}{8}''$ *x* $1\frac{9}{16}''$.
7. *Measured by compressed raster method starting with conditions of Note 6.*

OUTLINE

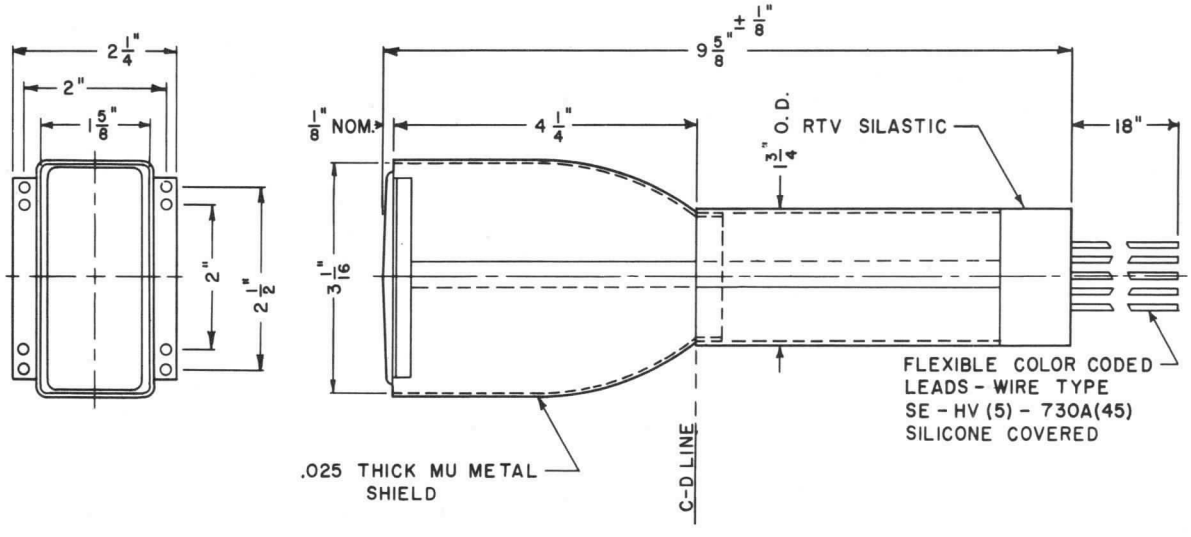

D64013

SYLVANIA

engineering data service

SYLVANIA

SC-2782*

DESCRIPTION

Sylvania Type SC-2782 is a 5-inch diameter Cathode-Ray Tube designed for high resolution photographic recording. Its electron-optical system and fine grain screen achieve very fine trace width with conventional focusing and deflection units and a simple beam-centering magnet. The tube has a flat, clear, non-browning optical glass faceplate for optimum photographic quality. An integral encapsulated high voltage connector is utilized to minimize corona at high altitude.

CHARACTERISTICS

GENERAL DATA

Focusing Method	Magnetic	
Deflection Method	Magnetic	
Deflection Angle (approx.)	50	Degrees
Type*	**SC-2782**	
Phosphor	Fine Grain P11, Aluminized	
Fluorescence	Blue	
Persistence	Short	
Faceplate	Clear, Non-Browning Optical Glass	

**In addition to the type shown, the SC-2782 can be supplied with several other screen phosphors.*

ELECTRICAL DATA

Heater Voltage	6.3	Volts
Heater Current	$0.6 \pm 10\%$	Ampere
Direct Interelectrode Capacitances (approx.)		
Grid No. 1 to all Other Electrodes	9	$\mu\mu$f
Cathode to all Other Electrodes	4.3	$\mu\mu$f
External Conductive Coating to Anode	500	$\mu\mu$f Max.
	100	$\mu\mu$f Min.

MECHANICAL DATA

Minimum Useful Screen Diameter	4¼	Inches
Overall Length	$16 \pm \frac{3}{8}$	Inches
Bulb	C40 Exp. 14 or Equivalent	
Anode Terminal	16", HV Cable, Corona Protected	
Base (Small Shell Duodecal 5-Pin)	B5-57	
Basing	12N	

QUICK REFERENCE DATA

- High Resolution Tube
- .001" Line Width
- 5-Inch, Flat, Optical Glass Faceplate
- Clear Non-Browning Faceplate
- Extremely Fine Grain Screen
- Aluminized Screen
- Magnetic Deflection
- Magnetic Focus
- No Ion Trap
- External Conductive Coating on Neck
- External Insulating Coating on Bulb

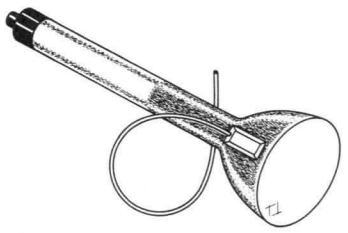

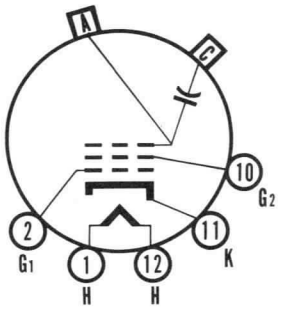

12-N

SYLVANIA
ELECTRONIC TUBES

A Division of
Sylvania Electric Products, Inc.

PICTURE TUBE OPERATIONS
SENECA FALLS, NEW YORK

Prepared and Released By The
TECHNICAL PUBLICATIONS SECTION
EMPORIUM, PENNSYLVANIA

SEPTEMBER, 1959

MAXIMUM RATINGS (Absolute Maximum Values)

Anode Voltage	25,000	Volts	dc
Grid No. 2 Voltage	2,500	Volts	dc
Grid No. 1 Voltage			
Negative Bias Value	150	Volts	dc
Positive Bias Value	0	Volts	dc
Positive Peak Value	0	Volts	
Peak Heater Cathode Voltage			
Heater Negative with Respect to Cathode			
During Warm-up Period Not to Exceed 15 Seconds	450	Volts	
After Equipment Warm-up	165	Volts	
Heater Positive with Respect to Cathode	165	Volts	

TYPICAL OPERATING CONDITIONS

Anode Voltage	20,000	Volts	dc
Grid No. 2 Voltage	2,000	Volts	dc
Grid No. 1 Voltage Required for Cutoff[1]	−33 to −77	Volts	dc
Focusing Coil Current (approx.)[2]	100	Ma	
Line Width[3]	0.001	Inch	

CIRCUIT VALUES

Grid No. 1 Circuit Resistance	1.5	Megohms Max.

NOTES:

1. *Visual extinction of undeflected focused spot.*
2. *For JEDEC focusing coil 106 or equivalent 2½" from reference line.*
3. *Line width measured at 5 μa by the shrinking raster method. Variable strength (0-10 gauss) beam centering magnet must be used for optimum line width.*

OUTLINE

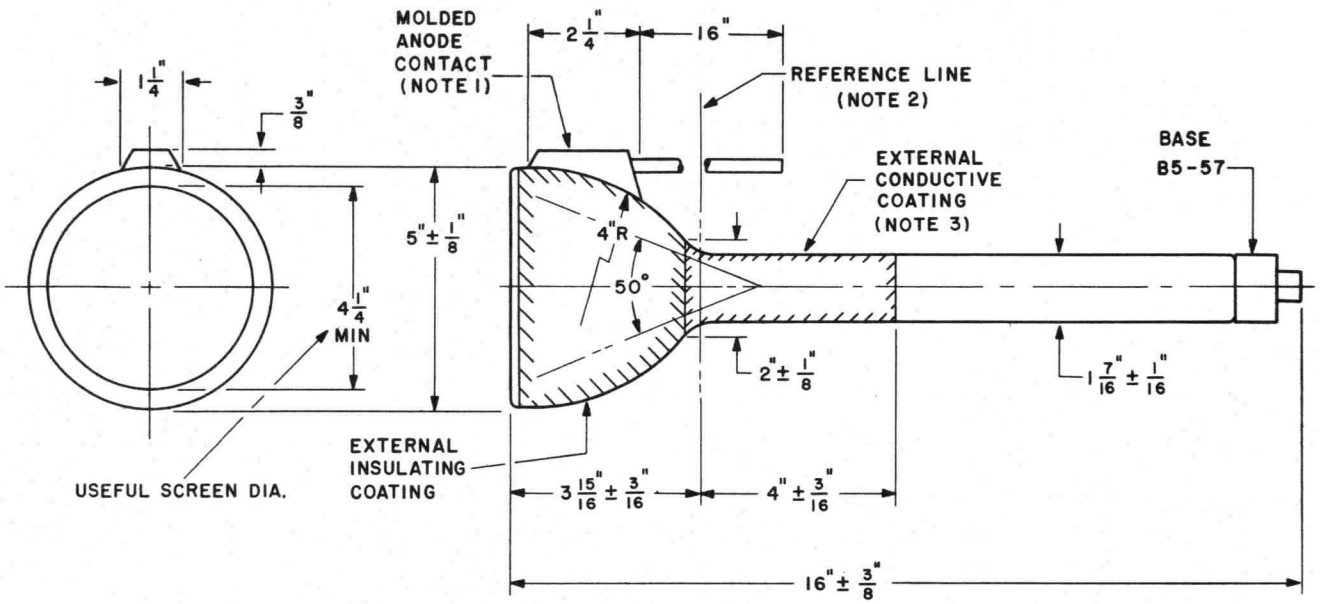

D59023

DIAGRAM NOTES:

1. *The plane through the tube axis and vacant pin position No. 3 may vary from the plane through the axis and centerline of molded anode contact by an angular tolerance (measured about the tube axis) of ±30°. Molded anode contact is on same side as vacant pin No. 3.*
2. *Reference line is determined by the plane C-C' of reference line gauge (JEDEC No. G112), when gauge is seated on the glass cone.*
3. *External conductive coating must be grounded.*

A Technical Publication of
SYLVANIA ELECTRIC
PRODUCTS INC.
EMPORIUM, PA.

DESCRIPTION

Sylvania Type SC-2795 is an electrostatic charge printing tube designed for use in high speed printing equipment. It is a cathode-ray tube which has as a target for the beam, an array of fine, closely spaced, wires extending through the bulb wall. Deflection and modulation of the beam striking the wires will produce charge patterns on a dielectric in contact with the outer surface of the tube.

In the printing application, a moving strip of paper, used as the dielectric, has charge patterns deposited on it which can be developed and fixed to produce permanent visual records. Both black-and-white and half-tone copy can be produced.

The fine focus beam of the SC-2795, the small wire size and close spacing in the array, and the low capacitance between wire elements, permit high resolution along with extremely rapid printing. The SC-2795 can be used for single line scanning, and the .160" height of the array permits two-dimensional scanning for other types of operation. The useful printing width of the array is 2¾ inches.

The SC-2795 was developed for the A. B. Dick Company, 5700 West Touhy Avenue, Chicago 48, Illinois for use in their Videograph Data Presentation Systems.

ELECTRICAL DATA

Focusing Method	Magnetic	
Deflection Method	Magnetic	
Horizontal Deflection Angle (Approx.)	24	Degrees
Heater Current at 6.3 Volts	600 ± 30	Ma
Direct Interelectrode Capacitances (Approx.)		
Cathode to All Other Electrodes	5	μμf
Grid No. 1 to All Other Electrodes	8	μμf

MECHANICAL DATA

Printing Head

0.001" Diameter Conductive Elements Spaced Approximately 0.004" on Centers in Both Directions.

Minimum Useful Printing Array Width	2.750	Inches
Minimum Useful Printing Array Height	0.160	Inches
Array Thickness (Approx.)	.050	Inches
Overall Length	19 ± ⅜	Inches
Width	3¼ ± 1/32	Inches
Height	1¾ ± 1/32	Inches
Neck Length	14⅝ ± ¼	Inches
Neck Diameter	1 7/16 ± 1/16	Inches
Bulb Contact	C1-3	
Base	B5-57	
Basing	12D	
Weight (Approx.)	1	Pound

MAXIMUM RATINGS (Absolute Maximum System)

Unless Otherwise Specified, All Voltages are Positive with Respect to Cathode.

Maximum Anode Voltage	25,000	Volts	
Maximum Grid No. 2 Voltage	700	Volts	
Grid No. 1 Voltage			
Maximum Negative Value	155	Volts	dc
Maximum Negative Peak Value	200	Volts	
Maximum Positive Value	0	Volts	dc
Maximum Heater Voltage	6.9	Volts	
Minimum Heater Voltage	5.7	Volts	
Maximum Heater-Cathode Voltage			
Heater Negative with Respect to Cathode	200	Volts	
Heater Positive with Respect to Cathode	200	Volts	

QUICK REFERENCE DATA

Electrostatic Charge Printing Tube
Magnetic Deflection
Magnetic Focus
High Speed Printing
High Resolution
Printing Dimensions:
.16" x 2.75" Minimum

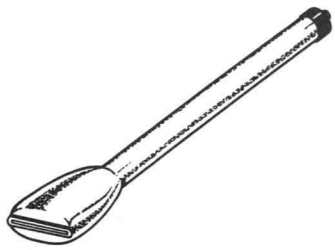

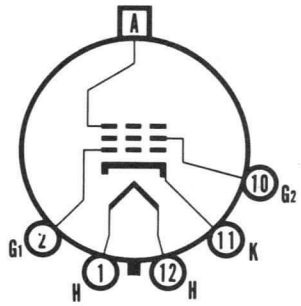

12-D

SYLVANIA
ELECTRONIC TUBES
A Division of
Sylvania Electric Products Inc.
PICTURE TUBE OPERATIONS
SENECA FALLS, NEW YORK

Prepared and Released By The TECHNICAL PUBLICATIONS SECTION EMPORIUM, PENNSYLVANIA

DECEMBER, 1961

File Under
SPECIAL AND GENERAL PURPOSE CATHODE RAY TUBES

TYPICAL OPERATING CONDITIONS — Grid Drive Service

Unless Otherwise Specified, All Voltages are Positive with Respect to Cathode.

Anode Voltage	20,000 Volts	dc
Grid No. 2 Voltage	300 Volts	dc
Grid No. 1 Voltage for Cutoff	−40 to −77 Volts	dc
Focusing Coil Current[1]	70 ± 10 Ma	dc

NOTE:

1. *For JEDEC Focus Coil No. 122 or equivalent, with the combined Grid No. 1 bias voltage and video-signal voltage adjusted to produce 100 μa anode current. Distance from tube face to center of air gap on focus coil is 7⅜ inches.*

OUTLINE

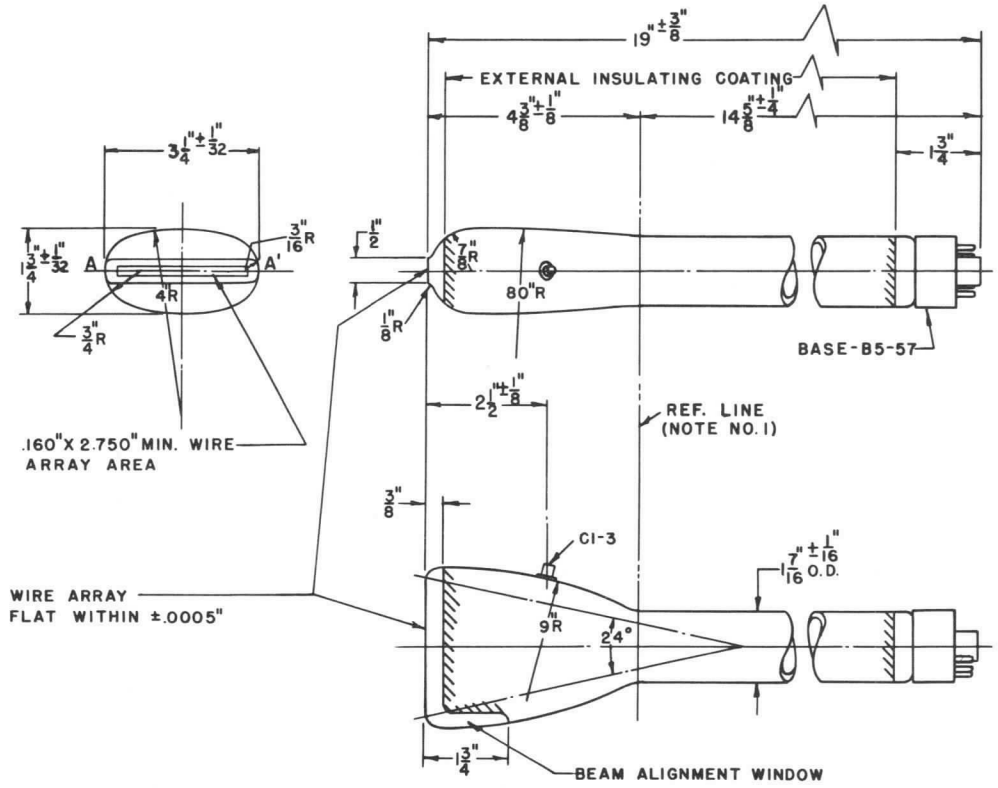

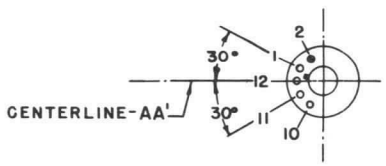

D61030

BOTTOM VIEW OF BASE
(NOTE NO. 2)

DIAGRAM NOTES:

1. *Reference line determined by plane where JEDEC Gauge No. 112 (a cylinder 1.500" + .003" — .000" I.D. and 2" long) will stop against body of bulb.*
2. *Base Pin No. 12 aligns with horizontal centerline (A-A') within 30° and is on the side opposite the anode contact, (C1-3).*

DESCRIPTION

Sylvania Type SC-2809 is a 5-inch diameter Cathode-Ray Tube designed for high resolution photographic recording. Its electron-optical system and fine grain screen achieve very fine trace width with conventional focusing and deflection units and a simple beam-centering magnet. The tube has a flat, clear, non-browning optical glass faceplate for optimum photographic quality. An integral encapsulated high voltage connector is utilized to minimize corona at high altitude.

CHARACTERISTICS

GENERAL DATA

Focusing Method	Magnetic
Deflection Method	Magnetic
Deflection Angle (Approx.)	50 Degrees
Type*	SC-2809
Phosphor	Aluminized, Fine Grain P11
Fluorescence	Blue
Persistence	Short
Faceplate	Clear, Non-Browning Optical Glass

*In addition to the type shown the SC-2809 can be supplied with several other screen phosphors.

ELECTRICAL DATA

Heater Voltage	6.3 Volts	
Heater Current	0.6 ± 10% Ampere	
Direct Interelectrode Capacitances (Approx.)		
Grid No. 1 to All Other Electrodes	10 μμf	
Cathode to All Other Electrodes	5.5 μμf	
External Conductive Coating to Anode	500 μμf	Max.
	100 μμf	Min.

MECHANICAL DATA

Minimum Useful Screen Diameter	4¼ Inches
Overall Length	16⅜ ± ⅜ Inches
Bulb	C40 Exp. 14 or Equivalent
Anode Terminal	16", HV Cable, Corona Protected
Base (Small Shell Duodecal 5-Pin)	B5-57
Basing	12N

MAXIMUM RATINGS (Absolute Maximum Values)

Anode Voltage	25,000 Volts	dc
Anode Current (Egl = 0 Volts)	3.0 μa	dc
Grid No. 2 Voltage	2500 Volts	dc
Grid No. 2 Current (Egl = 0 Volts)	2000 μa	dc
Grid No. 1 Voltage		
Negative Bias Value	150 Volts	dc
Positive Bias Value	0 Volts	dc
Positive Peak Value	0 Volts	
Peak Heater-Cathode Voltage		
Heater Negative with Respect to Cathode		
During Warm-up Period not to Exceed 15 Seconds	450 Volts	
After Equipment Warm-up	165 Volts	
Heater Positive with Respect to Cathode	165 Volts	

TYPICAL OPERATING CONDITIONS

Anode Voltage	20,000 Volts	dc
Grid No. 2 Voltage	2000 Volts	dc
Grid No. 1 Voltage Required for Cutoff[1]	−33 to −77 Volts	dc
Focusing Coil Current (Approx.)[2]	100 Ma	
Line Width[3]	0.0008 Inch	

CIRCUIT VALUES

Grid No. 1 Circuit Resistance	1.5 Megohms Max.

QUICK REFERENCE DATA

- High Resolution Tube
- 0.0008" Line Width
- 5-Inch, Flat, Optical Glass Faceplate
- Clear Non-Browning Faceplate
- Extremely Fine Grain Screen
- Aluminized Screen
- Magnetic Deflection
- Magnetic Focus
- No Ion Trap
- External Conductive Coating on Neck

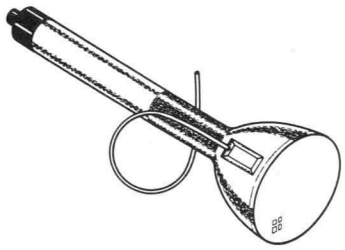

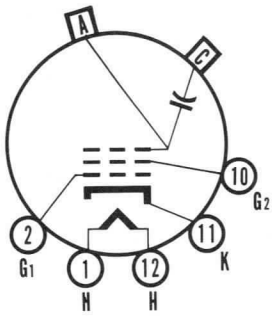

12-N

SYLVANIA
ELECTRONIC TUBES
A Division of
Sylvania Electric Products Inc.
PICTURE TUBE OPERATIONS
SENECA FALLS, NEW YORK

Prepared and Released By The
TECHNICAL PUBLICATIONS SECTION
EMPORIUM, PENNSYLVANIA

JULY, 1960

File Under
SPECIAL AND GENERAL PURPOSE
CATHODE RAY TUBES

NOTES:

1. *Visual extinction of undeflected focused spot.*
2. *For JEDEC focusing coil 106 or equivalent 2½" from reference line.*
3. *Line width measured at 2 μa anode current by the shrinking raster method. Variable strength (0-10 gauss) beam centering magnet must be used for optimum line width.*

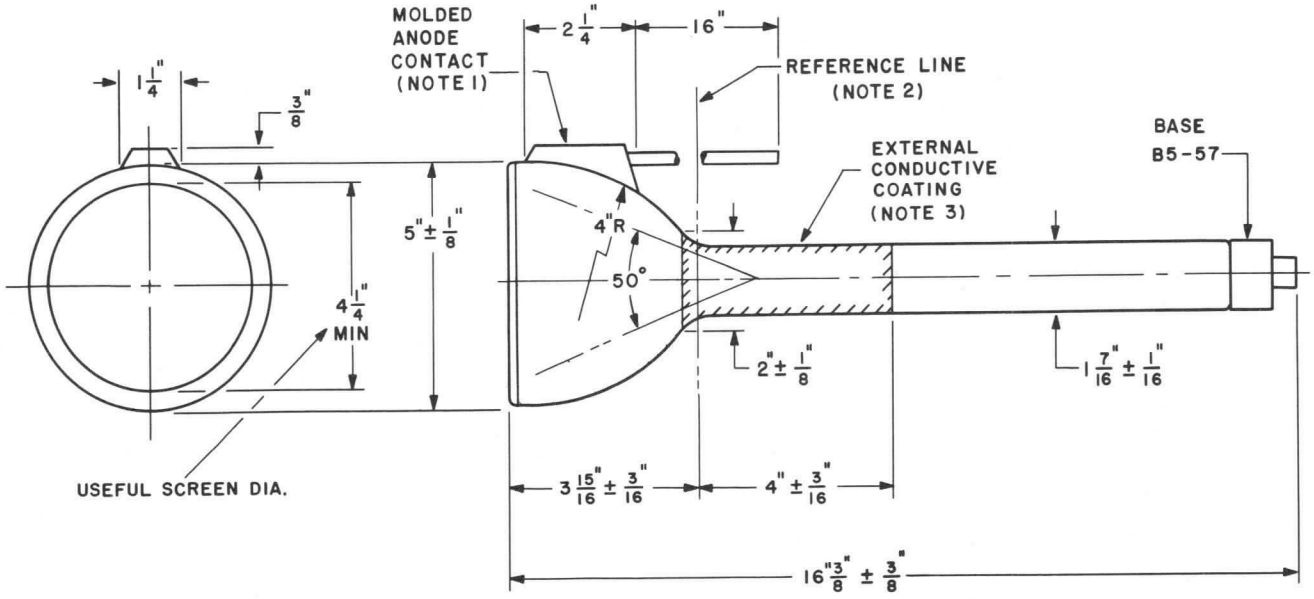

D59023

DIAGRAM NOTES:

1. *The plane through the tube axis and vacant pin position No. 3 may vary from the plane through the axis and centerline of molded anode contact by an angular tolerance (measured about the tube axis) of ±30°. Molded anode contact is on same side as vacant pin No. 3.*
2. *Reference line is determined by the plane C-C' of reference line gauge (JEDEC No. G112), when gauge is seated on the glass cone.*
3. *External conductive coating must be grounded.*

DESCRIPTION

The Sylvania Type SC-2840 is a 3-inch diameter, electrostatic focus and deflection cathode ray tube designed for compact analyzer equipment. It features short length and high brightness at low operating voltages.

QUICK REFERENCE DATA

Special Purpose Tube
3" Direct Viewed
Short Length
Round Glass Type
Electrostatic Deflection
Electrostatic Focus
High Brightness

CHARACTERISTICS

GENERAL DATA

Focusing Method	Electrostatic
Deflection Method	Electrostatic
Phosphor*	P1
Fluorescence	Green
Persistence	Medium
Faceplate	Clear

*In addition to the P1 phosphor the SC-2840 can be supplied with several other screen phosphors.

ELECTRICAL DATA

Heater Voltage	6.3 Volts
Heater Current	0.6 ± 10 % Ampere
Direct Interelectrode Capacitances (Approx.)	
Grid to All Other Electrodes	5.0 pf
Between Deflecting Plates 1-2	1.5 pf
Between Deflecting Plates 3-4	1.5 pf
Deflecting Plate 1 to All Other Electrodes[1]	6.5 pf
Deflecting Plate 2 to All Other Electrodes[1]	8.5 pf
Deflecting Plate 3 to All Other Electrodes[1]	5.5 pf
Deflecting Plate 4 to All Other Electrodes[1]	6.5 pf

MECHANICAL DATA

Minimum Useful Screen Diameter	2¾ Inches
Base (Small-Shell Duodecal 10-Pin)	B10-75
or (Small-Shell Duodecal 12-Pin)	B12-43
Basing	12F

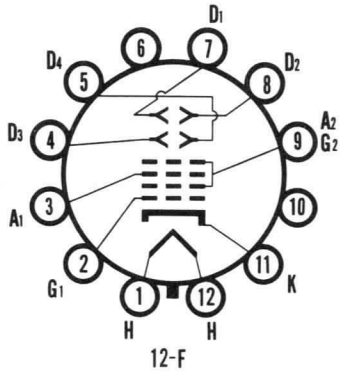

12-F

RATINGS

MAXIMUM RATINGS (Absolute Maximum Values)

Anode No. 2 Voltage	2250 Volts dc
Anode No. 1 Voltage	1100 Volts dc
Grid Voltage	
Negative Bias Value	220 Volts dc
Positive Bias Value	0 Volt
Positive Peak Value	2 Volts
Peak Heater-Cathode Voltage	
Heater Negative with Respect to Cathode	140 Volts
Heater Positive with Respect to Cathode	140 Volts
Peak Voltage Between Anode No. 2 and Any Deflection Plate	550 Volts

TYPICAL OPERATING CONDITIONS

Anode No. 2 Voltage[2]	1200 Volts dc
Anode No. 1 Voltage for Focus[3]	120 to 400 Volts dc
Grid Voltage Required for Cutoff[4]	−42 to −90 Volts dc
Deflection Factor[5,6]	
Deflecting Plates 1-2[7]	210 to 290 Volts dc/Inch
Deflecting Plates 3-4[8]	180 to 260 Volts dc/Inch

SYLVANIA ELECTRIC PRODUCTS INC.

Electronic Components Group
ELECTRONIC TUBE DIVISION
SENECA FALLS, NEW YORK

A Technical Publication

JUNE, 1964

File Under
SPECIAL AND GENERAL PURPOSE CATHODE RAY TUBES

CIRCUIT VALUES

Grid Circuit Resistance	1.5 Megohms Max.
Deflection Circuit Resistance	5.0 Megohms Max.

NOTES:

1. *Positive voltage on D1 with respect to D2 will move the spot approximately in the direction of Pin No. 4, ±10°. Positive voltage on D3 with respect to D4 will move the spot approximately in the direction of Pin No. 1.*
2. *Brilliance and definition decrease with decreasing Anode No. 2 Voltage. In general, Anode No. 2 Voltage should not be less than 1200 volts.*
3. *Eg set at 22.5 volts above spot cutoff.*
4. *Visual extinction of undeflected focused spot.*
5. *Angle between trace produced by plates D1-D2 and the plane through the tube axis and Pin No. 4 does not exceed 15°.*
6. *Angle between D1-D2 trace and D3-D4 trace is 90° ± 3°.*
7. *Deflecting Plates 1-2 are nearer the screen.*
8. *Deflecting Plates 3-4 are nearer the base.*

OUTLINE

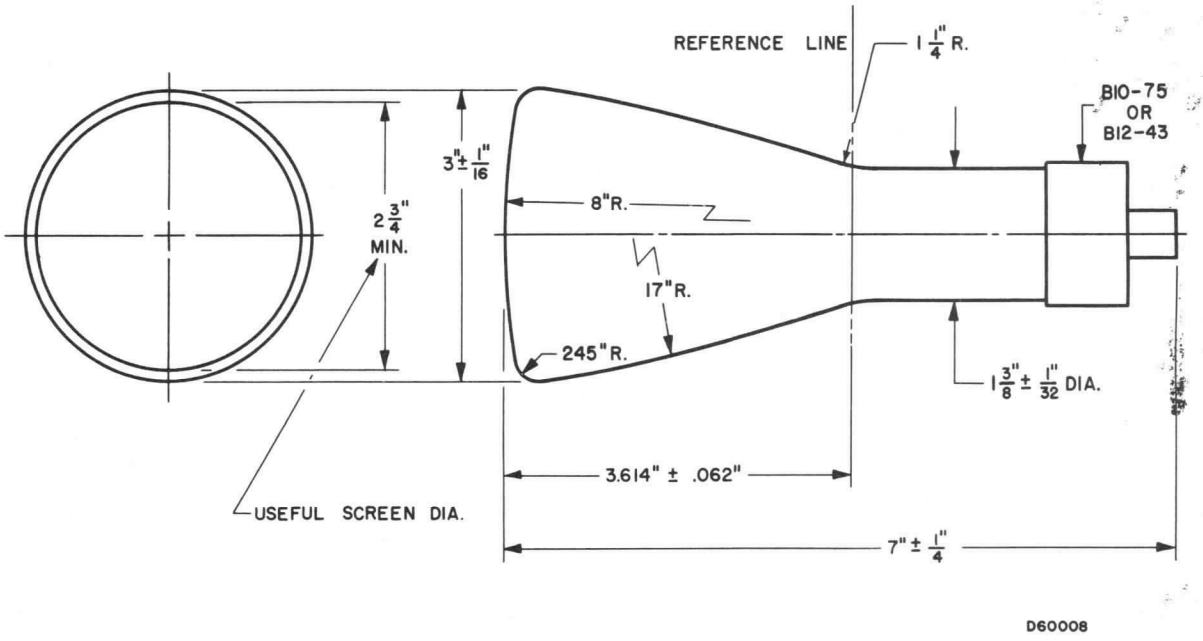

DESCRIPTION

The Sylvania Type SC-2854 is a 5-inch diameter, electrostatic focus and 53° magnetic deflection cathode ray tube designed to meet the high visibility requirements for airborne radar. Its special phosphor attains high brightness levels with a spectral distribution closely matched to the eye's peak sensitivity while providing persistence characteristics similar to those of the more common radar screens.

QUICK REFERENCE DATA

Special Purpose Tube
5" Direct Viewed
Round Glass Type
Magnetic Deflection
Electrostatic Focus
High Resolution
High Visibility Screen

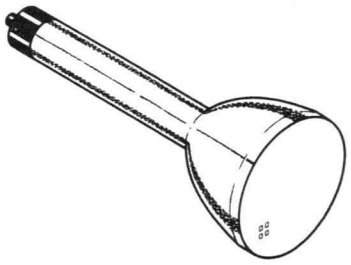

CHARACTERISTICS

GENERAL DATA

Focusing Method	Electrostatic
Deflecting Method	Magnetic
Deflection Angle (Approx.)	53 Degrees
Phosphor	Aluminized Special Phosphor
Fluorescence	Blue
Persistence	Long
Faceplate	Clear

ELECTRICAL DATA

Heater Voltage	6.3 Volts
Heater Current (Approx.)	0.6 Ampere
Direct Interelectrode Capacitances (Approx.)	
Cathode to All Other Electrodes	5 pf
Grid No. 1 to All Other Electrodes	6 pf

MECHANICAL DATA

Minimum Useful Screen Diameter	4¼ Inches
Bulb Contact (Recessed Small Ball Cap)	J1-22
Base (Medium Shell Octal 8-Pin)	B8-11 or B8-65
Basing	8EF
Bulb Contact Aligns with Pin No. 5	±10 Degrees

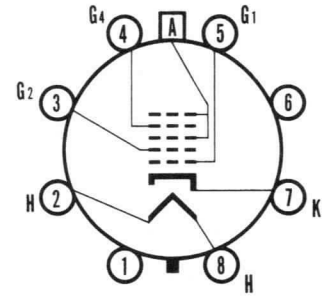

8-EF

RATINGS

MAXIMUM RATINGS (Absolute Maximum Values)

Anode Voltage	11,000 Volts	dc
Grid No. 4 (Focusing Electrode) Voltage	−550 to +1100 Volts	dc
Grid No 2 Voltage	770 Volts	dc
Grid No. 1 Voltage		
Negative Bias Value	200 Volts	dc
Positive Bias Value	0 Volt	
Positive Peak Value	0 Volt	
Peak Heater-Cathode Voltage		
Heater Negative with Respect to Cathode	200 Volts	
Heater Positive with Respect to Cathode	200 Volts	

TYPICAL OPERATING CONDITIONS

Anode Voltage[1]	7000 Volts	dc
Grid No. 4 Voltage for Focus[3]	0 to +250 Volts	dc
Grid No. 2 Voltage	300 Volts	dc
Grid No. 1 Voltage[2]	−33 to −77 Volts	dc
Line Width[3,4]	0.40 mm	Max.

CIRCUIT VALUES

Grid No. 1 Circuit Resistance	1.5 Megohms Max.

SYLVANIA ELECTRIC PRODUCTS INC.

Electronic Components Group
ELECTRONIC TUBE DIVISION
SENECA FALLS, NEW YORK

A Technical Publication

JUNE, 1964

File Under
SPECIAL AND GENERAL
PURPOSE CATHODE RAY TUBES

NOTES:

1. *Brilliance and definition decrease with decreasing anode voltage. In general, the anode voltage should not be less than 4000 volts.*
2. *Visual extinction of undeflected focused spot.*
3. *With Eg1 adjusted for Ib = 100 μa and beam focused for minimum width of individual lines at center of screen.*
4. *Measured by compressed raster method, using 35 to 105 line pattern.*

WARNING:

X-ray radiation shielding may be necessary to protect against possible danger of personal injury from prolonged exposure at close range if this tube is operated at higher than the manufacturer's Maximum Rated Anode Voltage or 16,000 volts, whichever is less.

OUTLINE

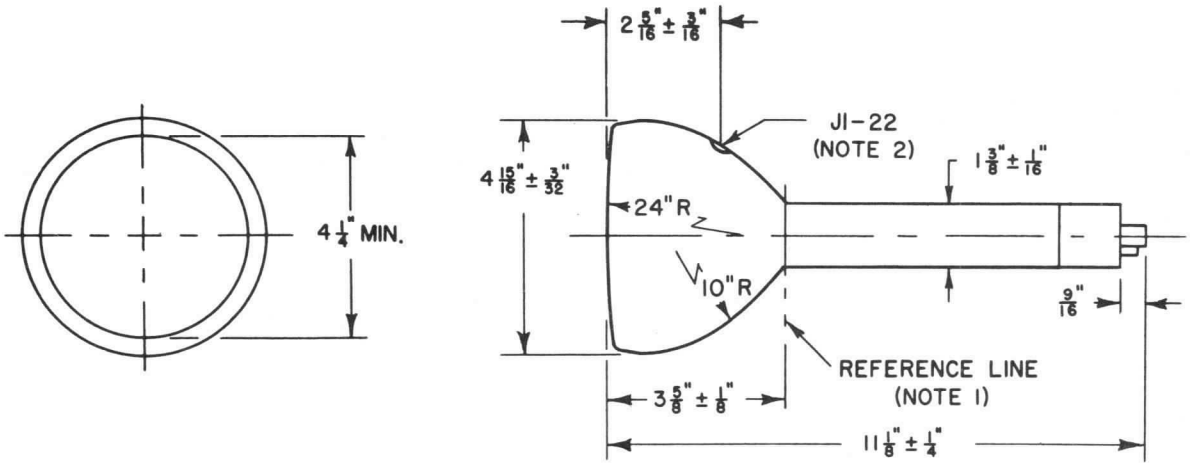

DIAGRAM NOTES:

1. *Reference line is determined by the point where 1.430 ± .003 inch diameter ring gauge 2 inches long will stop.*
2. *Anode contact (J1-22) aligns with base pin No. 5, ±10°.*

DESCRIPTION

The Sylvania SC-3016 is an electrostatic focus and deflection cathode ray tube, with a flat face 1⅛ inches in diameter, designed for compact equipments. The electron gun features high deflection sensitivity as well as the newly developed 1.5 volts - 140 ma. heater-cathode assembly. Any standard phosphor can be supplied.

The SC-3016 is cylindrical in shape, 1⅛ inches in diameter. An anode connection is brought out through the bulb and terminated in a standard J1-25 button. The cathode is internally connected to one leg of the heater. All deflection plate leads are brought out independently through the base.

ELECTRICAL CHARACTERISTICS

Ratings	Ef V	Ec1 Vdc	Eb1 Vdc	Eb2 Vdc	Ed V	Altitude Feet
Absolute Maximum	1.5±10 %	0	1100	2750	550	10,000
Absolute Minimum	—	−200	—	—	—	(Note 1)
Test Conditions	1.5	adj.	focus	1200	—	—

Characteristics	Condition	Approximate Values	
Heater Current	1.5V	140 ± 10 % Ma	
Angle Between Traces	—	90° ± 1°	
Line Width A	Note 2	0.4 mm	Max.
Grid Cutoff Voltage	—	−45 Vdc	Max.
Focus Voltage	Note 2	200-400 Vdc	
Deflection Factor, 1D2	—	124 ± 15 % Vdc/in.	
Deflection Factor, 3D4	—	49 ± 15 % Vdc/in.	

NOTES:

1. *A nominal rating of 10,000 feet has been specified. If higher values are required, additional insulation can be incorporated such that 50,000 feet can be attained.*
2. *Measured at a grid drive of 15 volts above spot cutoff voltage.*

QUICK REFERENCE DATA

1⅛" Direct Viewed
Round Glass Type
Flat Face
Electrostatic Deflection
Electrostatic Focus
Very Low Heater Power
High Deflection Sensitivity

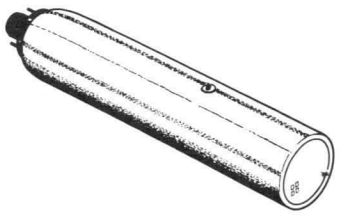

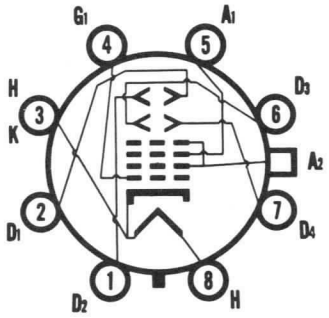

8 K F

SYLVANIA ELECTRIC PRODUCTS INC.

Electronic Components Group
ELECTRONIC TUBE DIVISION
SENECA FALLS, NEW YORK

A Technical Publication
JULY, 1965

File Under
SPECIAL AND GENERAL PURPOSE CATHODE RAY TUBES

OUTLINE

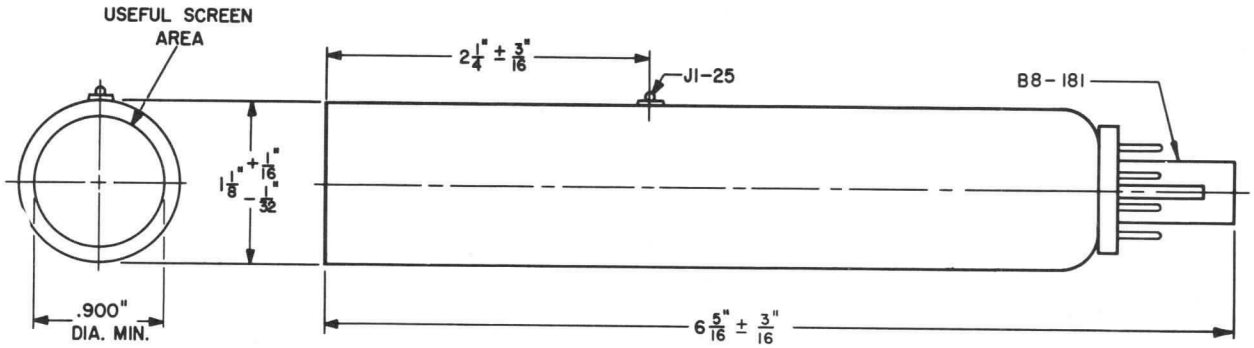

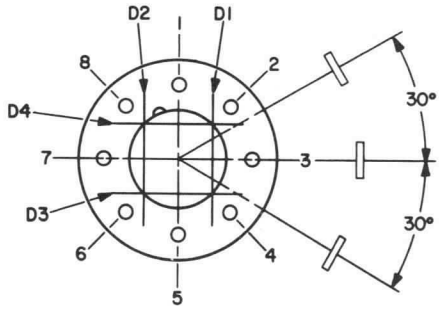

BOTTOM VIEW OF BASE

D60036B

SYLVANIA

engineering data service

SYLVANIA

SC-3042

DESCRIPTION

The SC-3042 is a 5" flat face, high resolution cathode ray tube with electrostatic deflection and focus. It is designed as a mono-accelerator to provide minimum pattern distortion and maximum sensitivity; and is intended for applications where line widths less than 0.010 inches are required. The SC-3042 can be supplied with any of the following phosphors for varied applications: P1, P2, P4, P7, P11, P12, P15, P16, P19, P20, P25.

CHARACTERISTICS

GENERAL DATA

Focusing Method	Electrostatic
Deflection Method	Electrostatic
Faceplate	Clear

ELECTRICAL DATA

Heater Voltage	6.3 Volts
Heater Current	0.6 ± 10% Ampere

MECHANICAL DATA

Overall Tube Length	16¾ ± 3/16 Inches
Minimum Useful Screen Diameter	4½ Inches
Base (Medium Shell Diheptal 12 Pin)	B12-37
Basing	14G
Bulb	J42P
D1-D2 Trace Aligns with Pin No 5 and Tube Axis	±10 Degrees
Positive Voltage on D1 (Pin #11) deflects beam approximately toward Pin #5	
Positive Voltage on D3 (Pin #7) deflects beam approximately toward Pin #2	
Angle Between D1-D2 and D3-D4 Traces	90 ± 1 Degrees

MAXIMUM RATINGS (Absolute Maximum Values)

Anode No. 2 Voltage	5000 Volts	dc
Anode No. 1 (Focus Electrode) Voltage	3000 Volts	dc
Grid No. 1 Voltage		
Negative Bias Value	220 Volts	dc
Positive Bias Value	0 Volts	dc
Positive Peak Value	2 Volts	
Peak Voltage Anode No. 2 to any Deflecting Plate	±550 Volts	
Peak Heater-Cathode Voltage		
Heater Negative with Respect to Cathode	200 Volts	
Heater Positive with Respect to Cathode	200 Volts	

TYPICAL OPERATING CONDITIONS

Anode No. 2 Voltage	3000 Volts	dc
Grid No. 1 Voltage (for Spot Cutoff)	-64 to -96 Volts	dc
Anode No. 1 Voltage (for Focus)	1000-1600 Volts	dc
Deflection Factors		
D1-D2	80-100 Volts/in.	
D3-D4	40-50 Volts/in.	
Line Width at 30 Volts Above Spot Cutoff[1]	.010 Inches	Max.
Useful Scan		
D1-D2	4½ Inches	Min.
D3-D4	4 Inches	Min.

NOTE:

1. *For maximum resolution over entire screen, it is recommended that dynamic focusing be used.*

QUICK REFERENCE DATA

High Resolution Tube
5" Direct Viewed
Electrostatic Deflection
Electrostatic Focus
Flat Face
Clear Faceplate

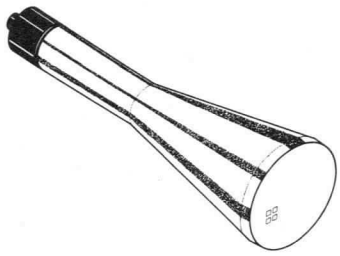

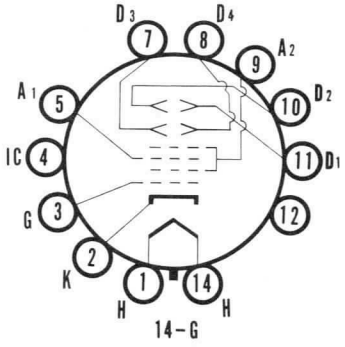

SYLVANIA
ELECTRONIC TUBES

A Division of
Sylvania Electric Products Inc.

PICTURE TUBE OPERATIONS
SENECA FALLS, NEW YORK

Prepared and Released By The
TECHNICAL PUBLICATIONS SECTION
EMPORIUM, PENNSYLVANIA

OCTOBER, 1961

File Under
SPECIAL AND GENERAL PURPOSE
CATHODE RAY TUBES

OUTLINE

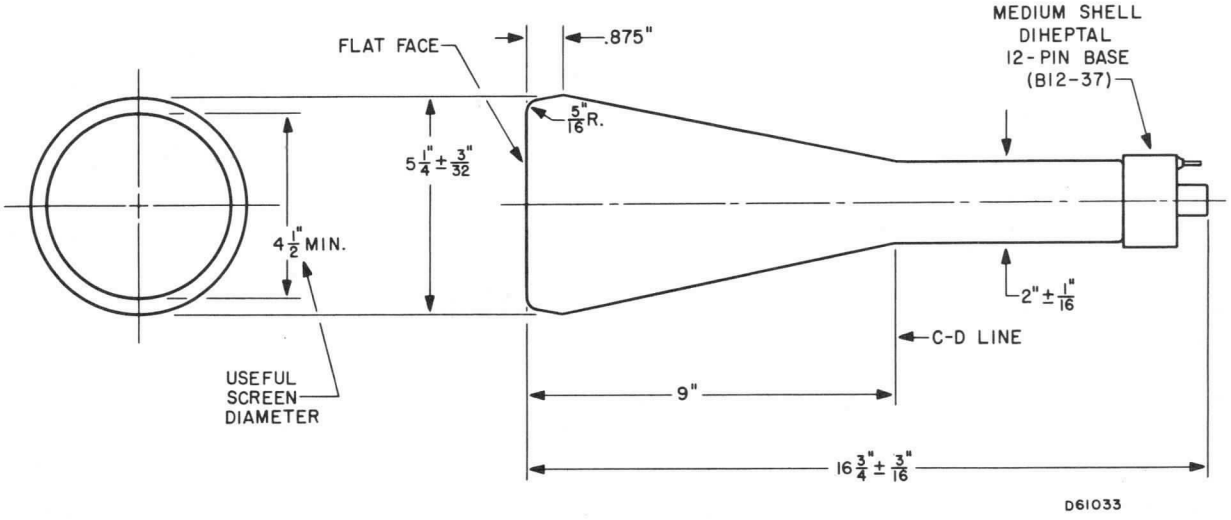
FLAT FACE
.875"
MEDIUM SHELL
DIHEPTAL
12-PIN BASE
(B12-37)
5/16" R.
5 1/4" ± 3/32"
4 1/2" MIN.
2" ± 1/16"
C-D LINE
USEFUL
SCREEN
DIAMETER
9"
16 3/4" ± 3/16"
D61033

DESCRIPTION

The Sylvania SC-3061 is a 3 gun, electrostatically focused and deflected cathode-ray tube, 10 inches in diameter, for displaying simultaneously, 3 independently controlled traces. It features monoaccelerator design for maximum pattern linearity and deflection factor uniformity. All deflection plate leads are brought through the neck. In addition to high vertical deflection sensitivity, an independent astigmatism electrode connection is provided, also brought through the neck, so that maximum resolution can be attained by the use of dynamic control of both focus and astigmatism voltages.

CHARACTERISTICS

GENERAL DATA[1]

Focusing Method	Electrostatic
Deflection Method	Electrostatic

Types*	SC-3061 P1	SC-3061 P2	SC-3061 P7	SC-3061 P11
Fluorescence	Green	Blue-Green	Blue	Blue
Phosphorescence	—	Green	Yellow	—
Persistence	Medium	Long	Long	Short

*In addition to the types shown, the SC-3061P- can be supplied with several other screen phosphors.

ELECTRICAL DATA

Heater Voltage	6.3 Volts
Heater Current (3 Guns in Parallel)	1.50 to 1.98 Amperes
Direct Interelectrode Capacitances (Approx.)	Each Gun
Cathode to All	5.5 μμf
Grid No. 1 to All*	6.5 μμf
D1 to D2	2.5 μμf
D3 to D4	1.5 μμf
D1 to All Other Electrodes	7.5 μμf
D2 to All Other Electrodes	7.5 μμf
D3 to All Other Electrodes	4.5 μμf
D4 to All Other Electrodes	4.5 μμf
*Value for B Gun Only:	10 μμf

MECHANICAL DATA

Overall Length	20½ ± ½ Inches
Minimum Useful Screen Diameter	9 Inches
Bulb Contact (Recessed Small Ball Cap)	J1-22
Basing	See Diagram, Page 4
Base and Contact Alignment	See Diagram, Page 4
Positive Voltage on D1 (Gun B) Deflects the Beam Toward Base Key	±10 Degrees
Positive Voltage on D3 Deflects the Beam Approximately Toward Pin No. 11	
Bulb Contact (J1-22), is Oriented 45° ± 10° from D1-D2 Trace (Gun B) and is Aligned Approximately with Base Pin Position No. 6	
For Deflection Plate Lead Alignment with the Base and Bulb Contact—See Diagram	
Trace Alignment	
D1-D2 Trace Aligns with D3-D4 Trace (Each Gun)	90 ± 1 Degree
D1-D2 Traces of the 3 Guns are Parallel	±1 Degree

QUICK REFERENCE DATA

Three Independent Guns
10" Direct Viewed
Oscilloscope Tube
Round Glass Type
Electrostatic Focus
Electrostatic Deflection
Monoaccelerator Design
All Deflection Plate Leads
Brought Through the Neck Wall

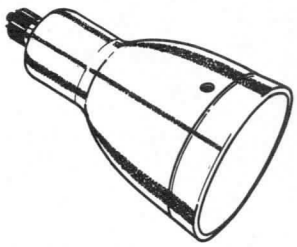

For Basing
See Page 4

SYLVANIA
ELECTRONIC TUBES
A Division of
Sylvania Electric Products Inc.
PICTURE TUBE OPERATIONS
SENECA FALLS, NEW YORK
Prepared and Released By The
TECHNICAL PUBLICATIONS SECTION
EMPORIUM, PENNSYLVANIA
OCTOBER, 1961

File Under
SPECIAL AND GENERAL PURPOSE
CATHODE RAY TUBES

MAXIMUM RATINGS (Absolute Maximum Values)

Anode Voltage	5500 Volts	dc
Focus Electrode Voltage	3000 Volts	dc
Grid No. 1 Voltage		
Negative Bias Value	220 Volts	dc
Positive Bias Value	0 Volts	dc
Positive Peak Value	2 Volts	dc
Peak Heater to Cathode Voltage		
Heater Negative with Respect to Cathode	200 Volts	
Heater Positive with Respect to Cathode	200 Volts	
Peak Voltage Between Anode and Astigmatism Electrode, or Any Deflecting Plate	750 Volts	

TYPICAL OPERATING CONDITIONS

Anode Voltage	5000 Volts	dc
Astigmatism Electrode Voltage	5000 Volts	dc
Focus Electrode Voltage	1500—2500 Volts	dc
Grid No. 1 Voltage[2]	−100 to −175 Volts	dc
Line Width "A"[3]	.016 Inches	Max.
Deflection Factors		
D1-D2	120 to 140 Volts Per Inch	
D3-D4	62 to 76 Volts Per Inch	
Deflection Factor Uniformity [4]	1½ Percent	Max.
Undeflected Spot Positions[5]	Within 1 Inch Square	
Useful Scan[6]		
D1-D2	±4⅛ Inches	
D3-D4	±1½ Inches	
Interaction Factor[7]	6×10^{-5} In./Volts	Max.
Pattern Distortion[8]		

CIRCUIT VALUES

Grid No. 1 Circuit Resistance	1.5 Megohm	Max.
Deflection Circuit Resistance	1.0 Megohm	Max.

NOTES:

1. *Values are for each gun unless otherwise specified.*
2. *Visual extinction of undeflected focused spot.*
3. *Per MIL-E-1 and at a control grid voltage of 25 volts above spot cutoff.*
4. *The deflection factor (for both D1-D2 and D3-D4 plate pairs separately) for a deflection of 75% of the minimum useful scan will not differ from the deflection factor at 25% of the minimum useful scan by more than the indicated value.*
5. *(See Diagram) With the tube shielded, D3-D4 traces vertical, and base Pin No. 11 at top, the three spot positions shall be within three 1 inch squares, each square centered along the vertical centerline of the tube face. The middle square (Gun B) centered on the tube face center, the top square (Gun A) centered 1⅜ inches above the tube face center, and the bottom square (Gun C) centered 1⅜ inches below the tube face center. The slides of the 3 square shall be parallel to the deflection axes.*
6. *Useful scan shall be measured from the center of the square as specified in Note 5 for spot centering.*
7. *The deflection of one beam when balanced dc voltages are applied to the deflection electrodes of either of the other two guns shall be less than the specified value.*
8. *The total horizontal movement of the left or right end of an 8" horizontal trace, produced by any of the three guns, when deflected vertically ¾ inches above or below its normal position, shall not exceed .060 inches.*

   The total vertical movement of the upper or lower end of a 1½ inch vertical trace produced by any of the three guns, when any one or all beams are deflected horizontally for the full 8 inches of sweep, shall be less than .075 inches.

OUTLINE

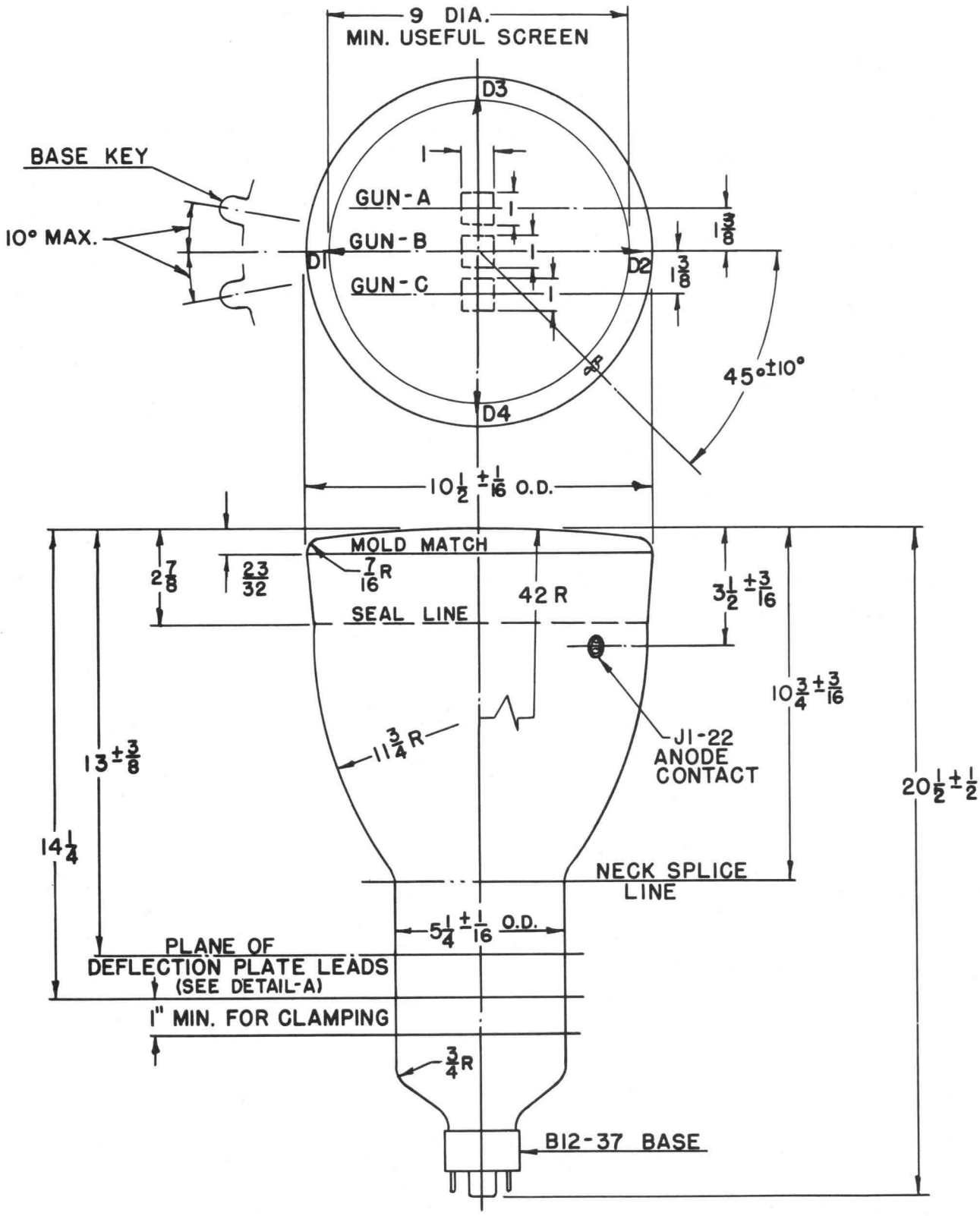
9 DIA.
MIN. USEFUL SCREEN
D3
D1
D2
D4
BASE KEY
10° MAX.
GUN-A
GUN-B
GUN-C
1 3/8
1 3/8
45°±10°
10 1/2 ± 1/16 O.D.
MOLD MATCH
7/16 R
2 7/8
23/32
42 R
SEAL LINE
3 1/2 ± 3/16
10 3/4 ± 3/16
J1-22
ANODE
CONTACT
11 3/4 R
13 ± 3/8
14 1/4
20 1/2 ± 1/2
NECK SPLICE
LINE
5 1/4 ± 1/16 O.D.
PLANE OF
DEFLECTION PLATE LEADS
(SEE DETAIL-A)
1" MIN. FOR CLAMPING
3/4 R
B12-37 BASE

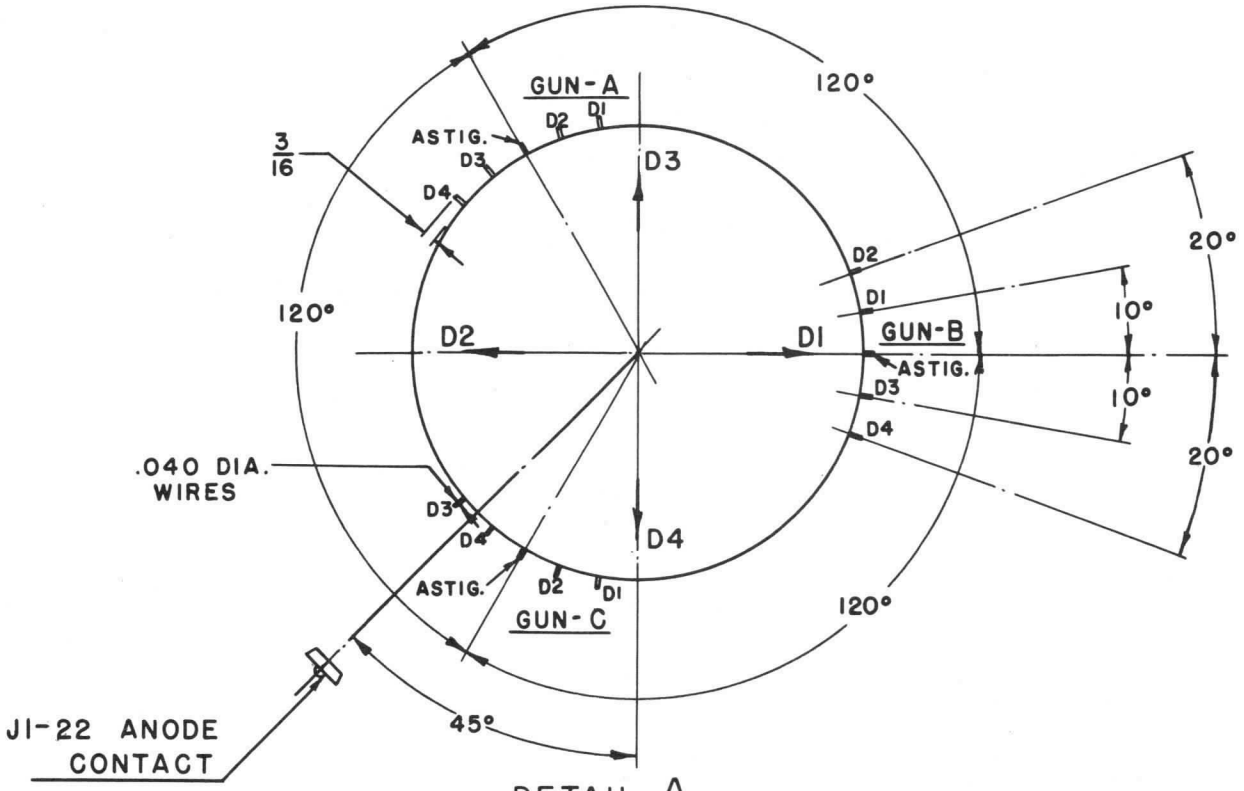

DETAIL-A
VIEW FROM BASE END OF TUBE

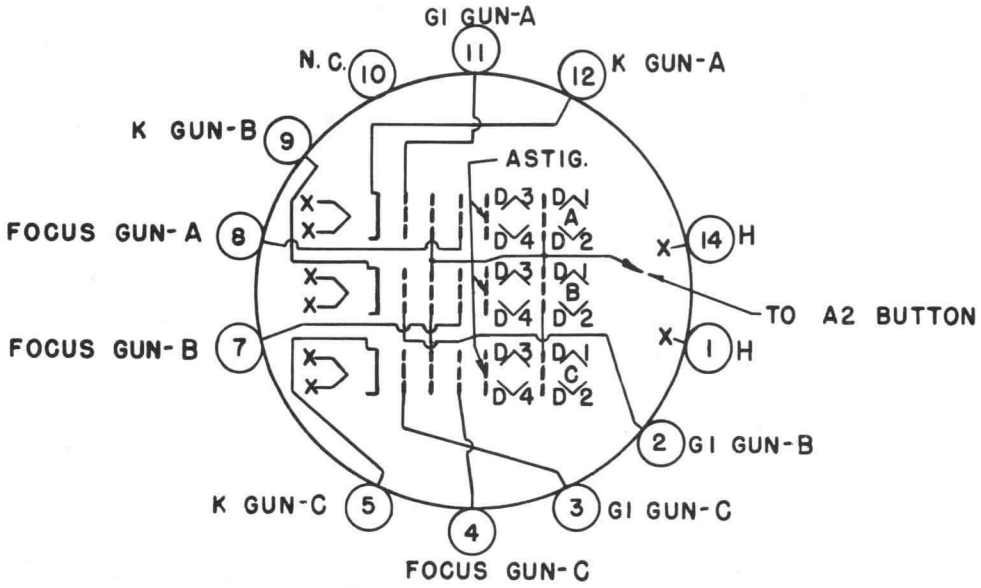

BASING DIAGRAM
VIEW FROM BASE END

ADVANCE DATA

DESCRIPTION

The Sylvania SC-3090 is a three gun, electrostatically focused and deflected cathode ray tube with a 5 ½ x 5 ½ inch square face for displaying, simultaneously, three independently controlled traces. It features a spiral post deflection accelerator for high deflection sensitivity with minimum pattern distortion, an aluminized screen for increased brightness, and a gun structure designed for minimum beam tracking error.

CHARACTERISTICS

GENERAL DATA

Focusing Method	Electrostatic
Deflection Method	Electrostatic
Phosphor*	P19
Fluorescence	Orange
Phosphorescence	Orange
Persistence	Long

*In addition to the Type shown, the SC-3090 can be supplied with several other screen phosphors.

ELECTRICAL DATA[1]

Heater Voltage	6.3 Volts
Heater Current (3 Guns in Parallel)	1.50 to 1.98 Amperes
Direct Interelectrode Capacitances (Approx.)	
Cathode to All	6 pf
Grid No. 1 to All	6 pf
D1 to D2	3.5 pf
D3 to D4	3 pf
D1 to All	10 pf
D2 to All	10 pf
D3 to All	10 pf
D4 to All	10 pf

MECHANICAL DATA

Overall Length	21 ½ ± ⅜ Inches
Minimum Useful Screen Dimensions	4 ½ Inch Square
Bulb Contact (Recessed Small Ball Cap)	J1-22
Neck Contacts (Small Ball Caps)	J1-25
Base	B25-139
Basing	See Diagram
Bulb	J55A

Base Alignment

Base Pin No. 12 Aligns with the Axis of the Tube Face within 10° and is on the Same Side as the Bulb Contact

Trace Alignment

Trace and Tube Face Alignment[2]	2 Degrees Max.

Positive Voltage on D1 (A gun, pin 5; B gun, pin 12; C gun, pin 21) Deflects the Beam Toward the Base Key.

Positive Voltage on D3 (A gun, pin 6; B gun, pin 10; C gun, pin 7) Deflects Beam Toward Bulb Contact

For Each Gun, Angle Between D1-D2 and D3-D4 Traces	90 ± 1 Degrees
Angle Between Corresponding Traces, All 3 Guns	1 Degree Max.

QUICK REFERENCE DATA

Three Independent Guns
5½" x 5½" Direct Viewed
Oscilloscope Tube
Electrostatic Focus
Electrostatic Deflection
Spiral Post Deflection Accelerator
Aluminized Screen

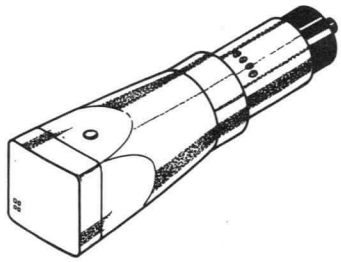

For Basing Diagram See Page 4

SYLVANIA ELECTRONIC TUBES

A Division of Sylvania Electric Products Inc.

PICTURE TUBE OPERATIONS

SENECA FALLS, NEW YORK

Prepared and Released By The TECHNICAL PUBLICATIONS SECTION EMPORIUM, PENNSYLVANIA

JULY, 1963

File Under

SPECIAL AND GENERAL PURPOSE CATHODE RAY TUBES

MAXIMUM RATINGS (Absolute Maximum Values)[1]

Anode No. 3 Voltage	10,500 Volts	dc
Anode No. 2 Voltage	3500 Volts	dc
Ratio Anode No. 3 Voltage to Anode No. 2 Voltage	4.0	
Intergun Shield Voltage	3500 Volts	dc
Anode No. 1 Voltage for Focus	1750 Volts	dc
Grid No. 1 Voltage		
Negative Bias Value	200 Volts	dc
Positive Bias Value	0 Volts	dc
Positive Peak Value	2 Volts	
Peak Heater to Cathode Voltage		
Heater Negative with Respect to Cathode	180 Volts	
Heater Positive with Respect to Cathode	180 Volts	
Peak Voltage Between Anode No. 2 or Intergun Shield, and any Deflection Plate	750 Volts	

TYPICAL OPERATING CONDITIONS[1]

Anode No. 3 Voltage	7500 Volts	dc
Anode No. 2 Voltage	2300 Volts	dc
Intergun Shield Voltage	2300 Volts	dc
Anode No. 1 Voltage for Focus	460 to 775 Volts	dc
Grid No. 1 Voltage[3]	−45 to −80 Volts	dc
Anode No. 3 Helix Current[4]	30 μadc	Max.
Line Width "A"[5]	.50 mm	Max.
Line Width "B"[5]	.65 mm	Max.
Modulation[5]	16 Volts dc	Max.
Deflect on Factors		
D1-D2	55 to 88 Vdc/in.	
D3-D4	53 to 75 Vdc/in.	
Deflection Factor Uniformity (per MIL-E-1)	2 Percent	
Interaction Factor[6]	6×10^{-5} in/Vdc	
Pattern Distortion[7]	2.5 Percent	
Tracking Error[8]		
Spot Position[9]		

CIRCUIT VALUES

Grid No. 1 Circuit Resistance	1.5 Megohms Max.
Deflection Circuit Resistance	1.0 Megohms Max.

NOTES:

1. *Values are for each gun unless otherwise specified.*
2. *The angle between the D1-D2 trace of any gun, when positioned at the center of the tube, and the edge of the tube face, on the side having the bulb contact, will not exceed 2°.*
3. *Visual extinction of undeflected focused spot.*
4. *When the tube is cutoff (no beam current), the Anode No. 3 will draw 30 μadc maximum.*
5. *Per MIL-E-1 at Ib3 = 2 μadc. Ib3 is beam current to the screen. To determine Ib3, measure current at the Anode No. 3 terminal and subtract the Anode No. 3 helix current with no beam current flowing (tube cutoff).*
6. *The deflection of one beam when balanced dc voltages are applied to the deflection electrodes of either of the other two guns will not be greater than the specified amount.*
7. *The edges of a raster pattern whose mean dimensions are 75 % of the useful screen width, will not deviate from the mean dimension by more than the amount specified.*
8. *Tracking area A is a circle, 4 inches in diameter, centered on the geometric center of the tube face. Tracking area B is that area outside of Area A but within a 4 x 4 inch square centered on the geometric center of the tube face, and with the sides parallel to the deflection axes. After compensation for spot centering and deflection factor differences, the greatest distance between the spots within tracking area A will be 0.055 inches, and within tracking area B, 0.075 inches.*
9. *With the tube shielded, the undeflected focused spots of all three guns will fall within a square, 15 mm on a side, centered on the tube face, with its sides parallel with the deflection axes.*

WARNING:

X-ray radiation shielding may be necessary to protect against possible danger of personal injury from prolonged exposure at close range if this tube is operated at higher than the manufacturer's Maximum Rated Anode Voltage or 16,000 volts, whichever is less.

OUTLINE

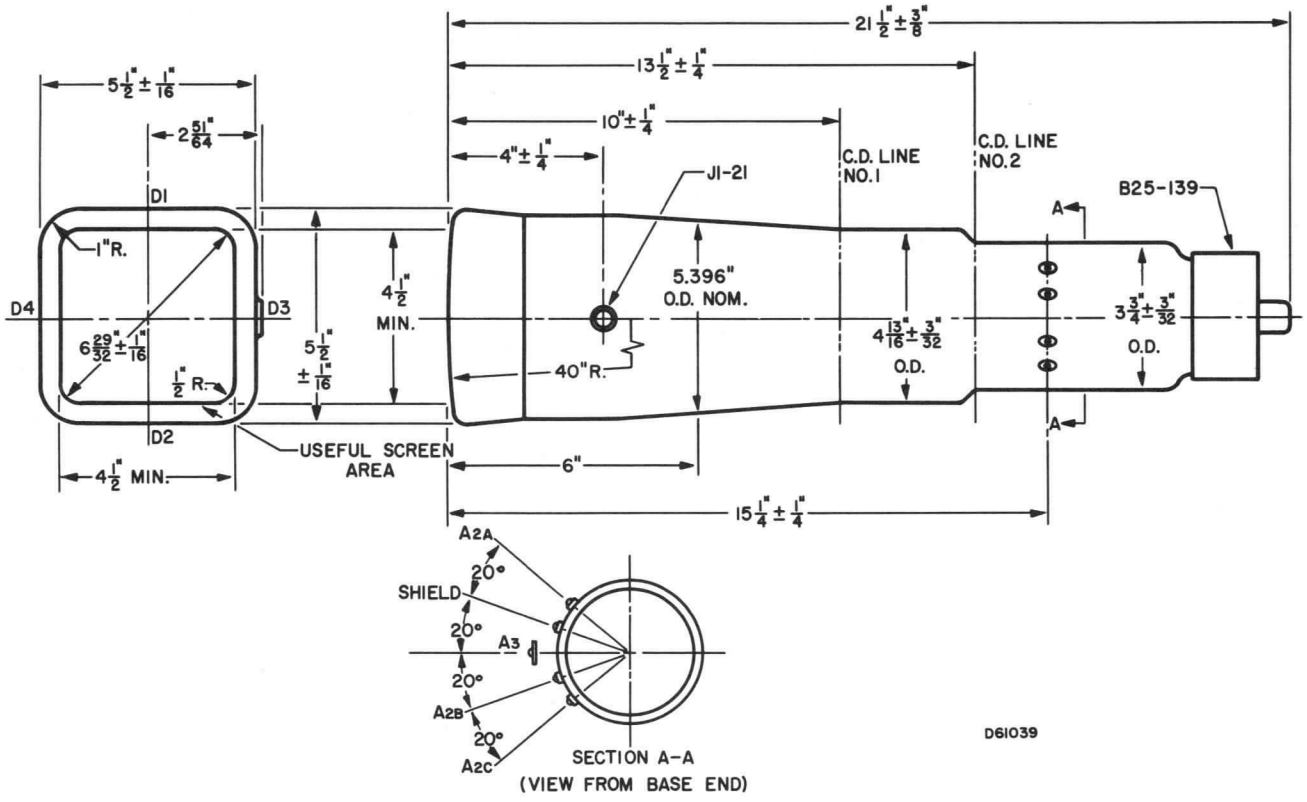

BASING DIAGRAM

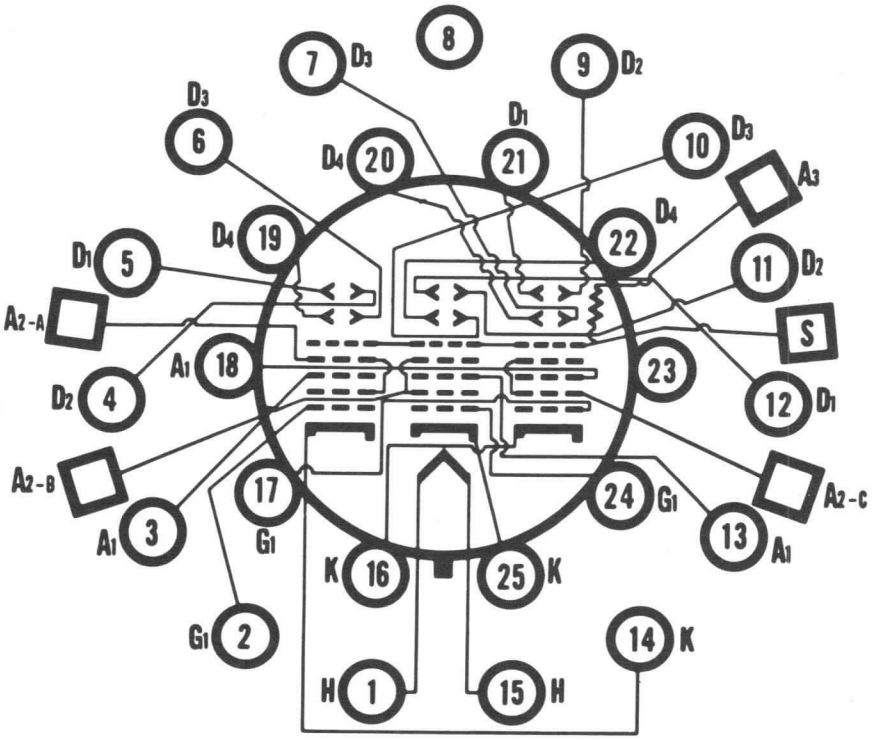

GUN-A

Pin No.	Element
14	Cathode
2	Grid No. 1
3	Anode No. 1
5	Deflector D1
4	Deflector D2
6	Deflector D3
19	Deflector D4

GUN-B

Pin No.	Element
25	Cathode
24	Grid No. 1
13	Anode No. 1
12	Deflector D1
11	Deflector D2
10	Deflector D3
22	Deflector D4

GUN-C

Pin No.	Element
16	Cathode
17	Grid No. 1
18	Anode No. 1
21	Deflector D1
9	Deflector D2
7	Deflector D3
20	Deflector D4

1 and 15 Heater (Common) S-Shield

DESCRIPTION

The Sylvania Type SC-3093 is a compact, 3″ monoscope tube designed for use in conjunction with high speed electrostatic printing equipment.
It features a useful target area approximately 2 x 2″, on which any pattern or up to 64 alpha numeric characters can be furnished. Artwork supplied on the target can be made according to individual customer's specifications.

CHARACTERISTICS

GENERAL DATA

Focusing Method	Electrostatic
Deflecting Method	Electrostatic

ELECTRICAL DATA

Heater Voltage	6.3 Volts
Heater Current	0.6 ± 10 % Amperes

RATINGS

MAXIMUM RATINGS (Absolute Maximum Values)

All Voltages Measured with Respect to Cathode

Collector	2500 Volts dc
Target	2500 Volts dc
Anode No. 1 (Focusing Electrode)	1000 Volts dc
Anode No. 2 (Accelerator)	2500 Volts dc
Negative Grid No. 1 (Control Grid)	200 Volts dc
Peak Heater Cathode Voltage	
Heater Negative with Respect to Cathode	200 Volts
Heater Positive with Respect to Cathode	200 Volts

TYPICAL OPERATING CONDITIONS

Cathode-to-Target Voltage	1100-1600 Volts
Collector-to-Target Voltage	+50 Volts
Anode No. 2-to-Target	+110 to +225 Volts
Anode No. 1-to-Cathode	21 to 38 % of E_{A2}
Deflection Factors:	
D3-D4	62-81 Volts dc/Inch/kv.
D1-D2	75-98 Volts dc/Inch/kv.

QUICK REFERENCE DATA

3″ Diameter Monoscope
Round Glass Type
2 x 2″ Target Plate
Electrostatic Focus
Electrostatic Deflection

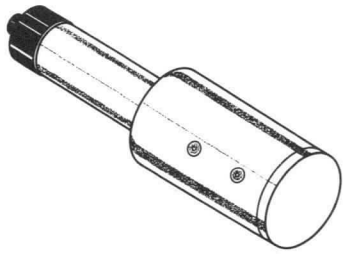

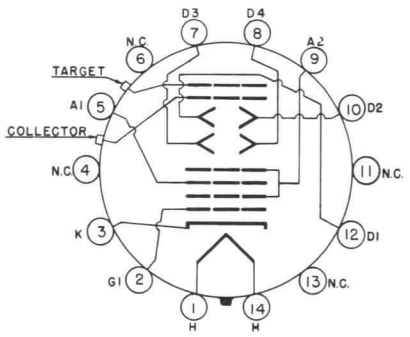

SYLVANIA ELECTRIC PRODUCTS INC.

Electronic Components Group
ELECTRONIC TUBE DIVISION
SENECA FALLS, NEW YORK

A Technical Publication

JUNE, 1964

File Under
SPECIAL AND GENERAL PURPOSE CATHODE RAY TUBES

OUTLINE

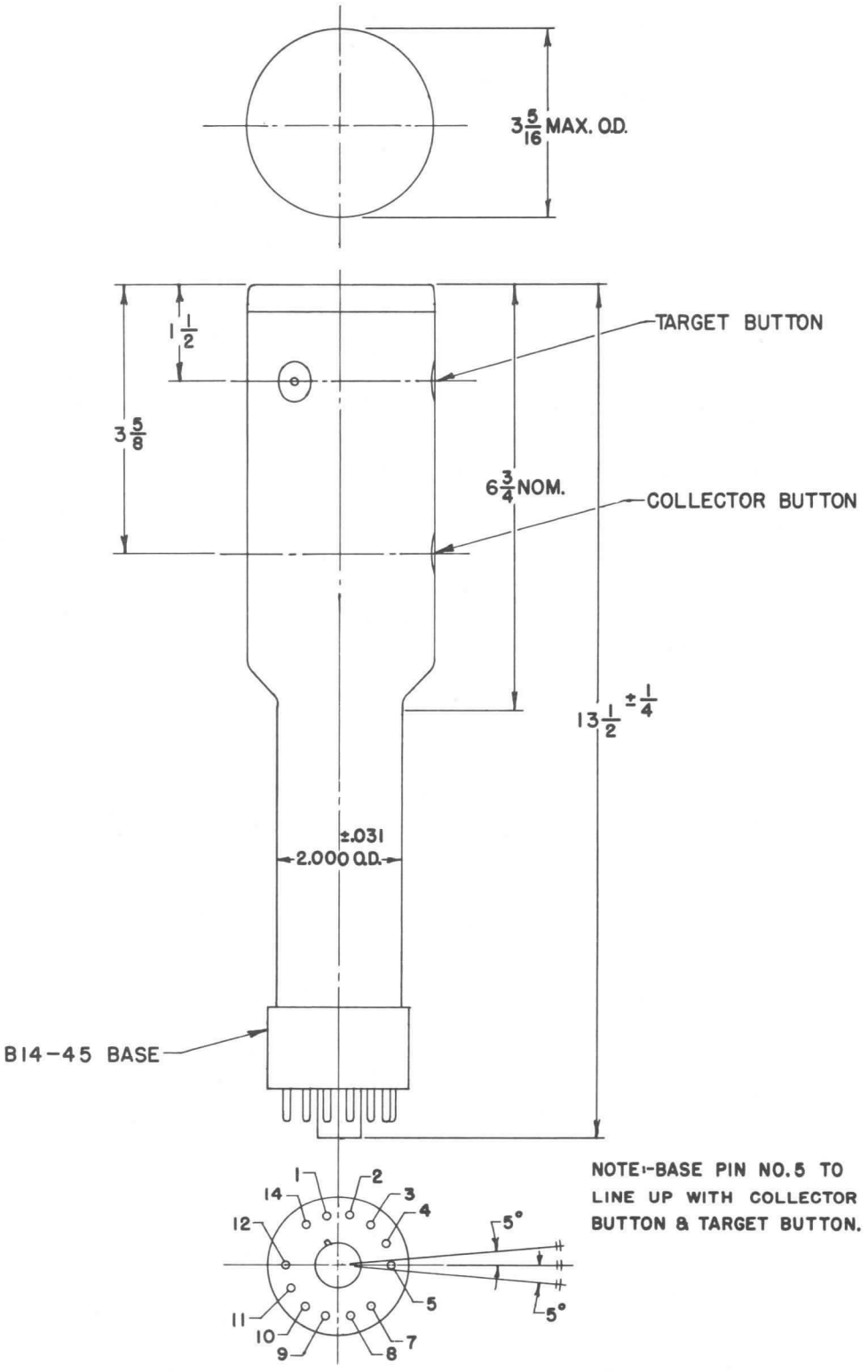
3 5/16 MAX. O.D.
1 1/2
TARGET BUTTON
3 5/8
6 3/4 NOM.
COLLECTOR BUTTON
13 1/2 ±1/4
±.031
2.000 O.D.
B14-45 BASE
1
2
3
4
5
7
8
9
10
11
12
14
5°
5°
NOTE:-BASE PIN NO. 5 TO LINE UP WITH COLLECTOR BUTTON & TARGET BUTTON.

CHARACTERISTICS

GENERAL DATA

Focusing Method		Electrostatic
Deflection Method		Magnetic
Deflection Angle (Approx.)		50 Degrees
Phosphor*	**P4**	**P11**
Fluorescence	White	Blue
Phosphorescence	White	Blue
Persistence	Med. Short	Short

*In addition to the phosphors shown the SC-3122 can be supplied with several other phosphors.

ELECTRICAL DATA

Heater Voltage	6.3 Volts
Heater Current	0.6 ± 10 % Ampere
Direct Interelectrode Capacitances (Approx.)	
Cathode to All Other Electrodes	5 pf
Grid No. 1 to All Other Electrodes	6 pf

MECHANICAL DATA

Minimum Useful Screen Diameter	9 Inches
Bulb Contact (Recessed Small Cavity Cap)	J1-21
Base (Small Shell Duodecal 6-Pin)	B6-63
Basing	12M
Bulb Contact Aligns with Vacant Pin Position No. 3	±10 Degrees

MAXIMUM RATINGS (Absolute Maximum Values)

Anode Voltage	22,000 Volts	dc
Grid No. 4 Voltage (Focusing Electrode)	−550 to 1100 Volts	dc
Grid No. 2 Voltage	770 Volts	dc
Grid No. 1 Voltage		
Negative Bias Value	200 Volts	dc
Positive Bias Value[1]	0 Volt	dc
Positive Peak Value	0 Volt	
Peak Heater-Cathode Voltage		
Heater Negative with Respect to Cathode	200 Volts	dc
Heater Positive with Respect to Cathode	200 Volts	dc

TYPICAL OPERATING CONDITIONS

Anode Voltage[2]	20,000 Volts	dc
Grid No. 4 Voltage for Focus[3]	0 to 300 Volts	dc
Grid No. 2 Voltage	300 Volts	dc
Grid No. 1 Voltage for Cutoff[4]	−28 to −72 Volts	dc
Resolution at Ib = 50 μa	700 Lines	Min.

QUICK REFERENCE DATA

Monitor Tube
Electrostatic Focus
Magnetic-Deflection
10″ Diameter
Flat Face

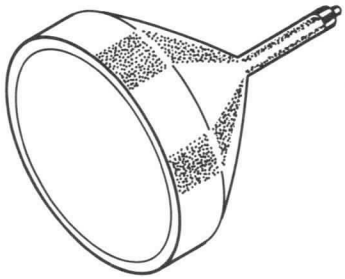

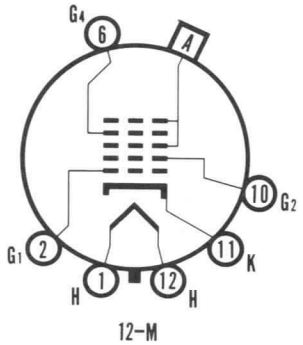

12-M

SYLVANIA ELECTRIC PRODUCTS INC.

Electronic Components Group
ELECTRONIC TUBE DIVISION
SENECA FALLS, NEW YORK

A Technical Publication

MAY, 1965

File Under

SPECIAL AND GENERAL PURPOSE CATHODE RAY TUBES

MAXIMUM CIRCUIT VALUE

Grid No. 1 Circuit Resistance . . . . . 1.5 Megohms Max.

NOTES:

1. *At or near this rating, the effective resistance of the anode supply should be adequate to limit the anode input power to 6 watts. To prevent burning, minimum beam current densities should be employed.*
2. *Brilliance and definition decrease with decreasing anode voltage. In general, anode voltage should not be less than 7,000 volts.*
3. *With Eg1 adjusted for Ib = 50 microamperes.*
4. *Visual extinction of focused raster. Extinction of stationary focused spot will require values of about 5 volts more negative.*

WARNING:

X-ray radiation shielding may be necessary to protect against possible danger of personal injury from prolonged exposure at close range if this tube is operated at higher than the manufacturer's Maximum Rated Anode Voltage or 16,000 volts, whichever is less.

OUTLINE

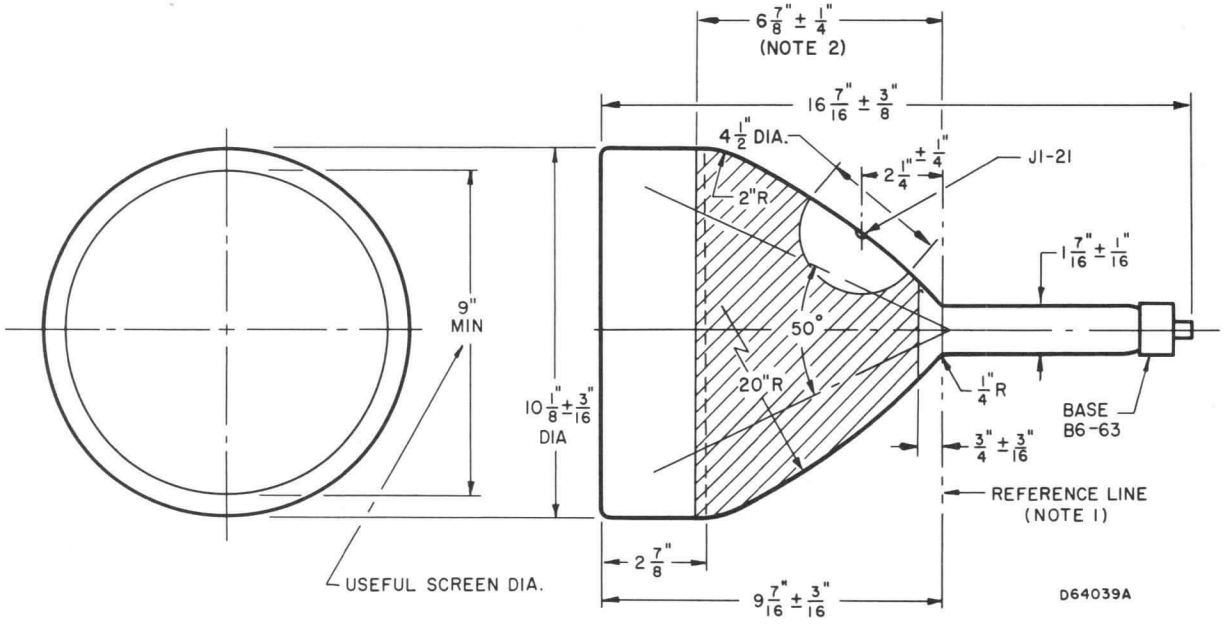

DIAGRAM NOTES:

1. *Reference line is the point where a 1.500" $^{+.003"}_{-.000"}$ diameter ring gauge 2" long will stop against the bulb.*
2. *With external conductive coating, tube is designated as the SC3122P-A. Capacitance value will be between 500 pf and 2500 pf*

SYLVANIA

engineering data service

SYLVANIA
SC-3144
SC-3154

DESCRIPTION

Sylvania Types SC-3144 and SC-3154 are electrostatic charge printing tubes designed for use in high speed printing equipment. Each is a cathode-ray tube which has as a target for the beam, an array of fine, closely spaced wires extending through the bulb wall. Deflection and modulation of the beam striking the wires will produce charge patterns on a dielectric in contact with the outer surface of the tube.

In the printing application, a moving strip of paper, used as the dielectric, has charge patterns deposited on it which can be developed and fixed to produce permanent visual records. Both black-and-white and half-tone copy can be produced.

The fine focus beam, the small wire size and close spacing in the array, and the low capacitance between wire elements, permit high resolution along with extremely rapid printing. Both types can be used for single line scanning, and the .160" height of the array of the SC-3154 permits two-dimensional scanning for other methods of operation. The useful printing width of the array is 8.6 inches.

The SC-3144 and SC-3154 were developed for the A. B. Dick Company, 5700 West Touhy Avenue, Chicago 48, Illinois for use in their Videograph Data Presentation Systems.

ELECTRICAL DATA

Focusing Method	Magnetic
Deflection Method	Magnetic
Horizontal Deflection Angle (Approx.)	52 Degrees
Heater Current at 6.3 Volts	600 ± 30 Ma
Direct Interelectrode Capacitances (Approx.)	
Cathode to All Other Electrodes	5 $\mu\mu$f
Grid No. 1 to All Other Electrodes	8 $\mu\mu$f

MECHANICAL DATA

Printing Head	
0.001" Diameter Conductive Elements Spaced Approximately 0.004" on Centers in Both Directions.	
Minimum Useful Printing Array Width	8.6 Inches
Minimum Useful Printing Array Height	
SC-3144	0.050 Inches
SC-3154	0.160 Inches
Array Thickness (Approx.)	0.50 Inches
Overall Length	26 ± 3/8 Inches
Width	.10 5/8 ± 1/8 Inches
Height	3 7/16 + 1/16 − 1/8 Inches
Neck Length	17 ± 3/16 Inches
Neck Diameter	1 7/16 ± 1/16 Inches
Bulb Contact	C1-3
Base	B5-57
Basing	12D
Weight (Approx.)	6 Pounds

MAXIMUM RATINGS (Absolute Maximum System)

Unless Otherwise Specified, All Voltages are Positive with Respect to Cathode.

Maximum Anode Voltage	25,000 Volts	
Maximum Grid No. 2 Voltage	700 Volts	
Grid No. 1 Voltage		
Maximum Negative Value	155 Volts	dc
Maximum Negative Peak Value	200 Volts	
Maximum Positive Value	0 Volts	dc
Maximum Heater Voltage	6.9 Volts	
Minimum Heater Voltage	5.7 Volts	
Maximum Heater-Cathode Voltage		
Heater Negative with Respect to Cathode	200 Volts	
Heater Positive with Respect to Cathode	200 Volts	

QUICK REFERENCE DATA

Electrostatic Charge
Printing Tube
Magnetic Deflection
Magnetic Focus
High Speed Printing
High Resolution
Min. Printing Dimensions:
.05" x 8.6" (SC-3144)
.16" x 8.6" (SC-3154)

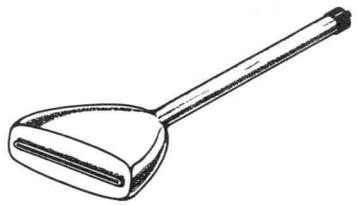

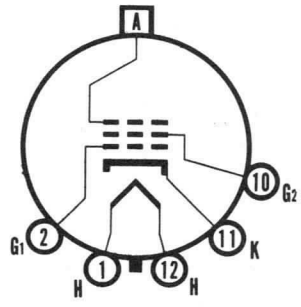

12-D

SYLVANIA
ELECTRONIC TUBES

A Division of
Sylvania Electric Products Inc.

PICTURE TUBE OPERATIONS
SENECA FALLS, NEW YORK

Prepared and Released By The
TECHNICAL PUBLICATIONS SECTION
EMPORIUM, PENNSYLVANIA

DECEMBER, 1961

File Under
SPECIAL AND GENERAL PURPOSE
CATHODE RAY TUBES

TYPICAL OPERATING CONDITIONS — Grid Drive Service

Unless Otherwise Specified, All Voltages are Positive with Respect to Cathode.

Anode Voltage[1]	10,000 Volts	dc
Grid No. 2 Voltage	300 Volts	dc
Grid No. 1 Voltage (For Cutoff)	−40 to −77 Volts	dc
Focusing Coil Current[2]	50 ± 10 Ma	dc

NOTES:

1. *Anode voltage of 20,000 volts dc recommended for high resolution, two-dimensional scan on SC-3154.*
2. *For JEDEC Focus Coil No. 122 or equivalent, with the combined Grid No. 1 bias voltage and video-signal voltage adjusted to produce 100 μa anode current. Distance from the tube face to center of air gap on focus coil is 12 inches.*

OUTLINE

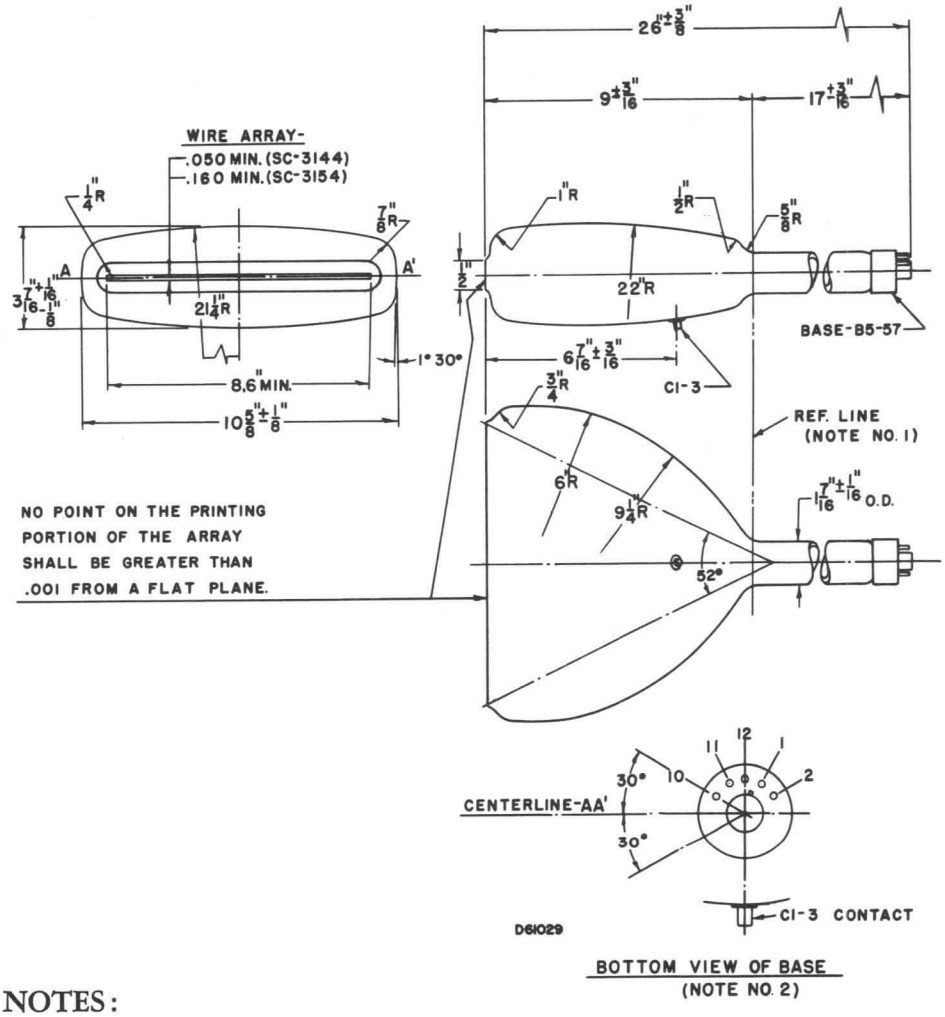

DIAGRAM NOTES:

1. *Reference line determined by plane where JEDEC Gauge No. 112 (a cylinder 1.500" + .003" − .000" I.D. and 2" long) will stop against body of bulb.*
2. *Vacant base pin positions No. 3 and No. 9 align with horizontal centerline (A-A') within 30°. Base Key is on side opposite the anode contact (C1-3).*

ADVANCE DATA

DESCRIPTION

Sylvania Type SC-3168 is a 5-inch diameter cathode-ray tube designed for high resolution photographic recording. Its electron-optical system, very low deflection angle, and fine grain screen achieve very fine trace width with conventional focusing and deflection units and a simple beam-centering magnet. The tube has a flat, clear, non-browning optical glass faceplate for optimum photographic quality. An integral encapsulated high voltage connector is utilized to minimize corona at high altitude.

CHARACTERISTICS

GENERAL DATA

Focusing Method	Magnetic
Deflection Method	Magnetic
Deflection Angle (Approx.)	16 Degrees
Phosphor*	Fine Grain P11, Aluminized
Fluorescence	Blue
Persistence	Short
Faceplate	Clear, Non-Browning Optical Glass

*In addition to the type shown, the SC-3168 can be supplied with several other screen phosphors.

ELECTRICAL DATA

Heater Voltage	6.3 Volts	
Heater Current	0.6 ± 10 % Ampere	
Direct Interelectrode Capacitances (Approx.)		
Grid No. 1 to All Other Electrodes	9 pf	
Cathode to All Other Electrodes	4.3 pf	
External Conductive Coating to Anode	500 pf	Max.
	100 pf	Min.

MECHANICAL DATA

Minimum Useful Screen Diameter	4 ¼ Inches
Overall Length	26 ± ⅜ Inches
Bulb	See Outline Drawing
Anode Terminal	16", HV Cable, Corona Protected
Base (Small Shell Duodecal 5-Pin)	B5-57
Basing	12N

MAXIMUM RATINGS (Absolute Maximum Values)

Anode Voltage	25,000 Volts	dc
Grid No. 2 Voltage	2500 Volts	dc
Grid No. 1 Voltage		
Negative Bias Value	150 Volts	dc
Positive Bias Value	0 Volts	dc
Positive Peak Value	0 Volts	
Peak Heater Cathode Voltage		
Heater Negative with Respect to Cathode		
During Warm-up Period Not to Exceed 15 Seconds	450 Volts	
After Equipment Warm-upPeriod	165 Volts	
Heater Positive with Respect to Cathode	165 Volts	

TYPICAL OPERATING CONDITIONS

Anode Voltage	20,000 Volts	dc
Grid No. 2 Voltage	2000 Volts	dc
Grid No. 1 Voltage Required for Cutoff[1]	−33 to −77 Volts	dc
Focusing Coil Current (Approx.)[2]	80 Ma	
Line Width[3]	0.002 Inch	

QUICK REFERENCE DATA

High Resolution Tube
.002" Line Width
5-Inch, Flat, Optical Glass Faceplate
Clear Non-Browning Faceplate
Extremely Fine Grain Screen
Aluminized Screen
Magnetic Deflection
Magnetic Focus
No Ion Trap
External Conductive Coating on Neck

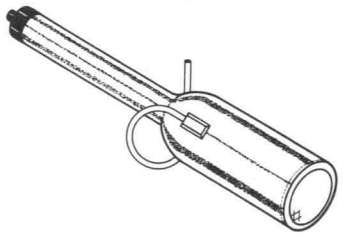

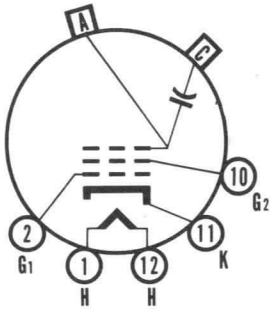

12-N

SYLVANIA
ELECTRONIC TUBES
A Division of
Sylvania Electric Products Inc.
PICTURE TUBE
OPERATIONS
SENECA FALLS, NEW YORK

Prepared and Released By The
TECHNICAL PUBLICATIONS SECTION
EMPORIUM, PENNSYLVANIA

JULY, 1963

File Under
SPECIAL AND GENERAL
PURPOSE CATHODE RAY TUBES

CIRCUIT VALUES

Grid No. 1 Circuit Resistance . . . . . 1.5 Megohms Max.

NOTES:

1. *Visual extinction of undeflected focused spot.*
2. *For JEDEC focusing coil 106 or equivalent 2 ½" from reference line.*
3. *Line width measured at 5 μa by the shrinking raster method. Variable strength (0-10 gauss) beam centering magnet must be used for optimum line width.*

WARNING:

X-ray radiation shielding may be necessary to protect against possible danger of personal injury from prolonged exposure at close range if this tube is operated at higher than the manufacturer's Maximum Rated Anode Voltage of 16,000 volts, whichever is less.

OUTLINE

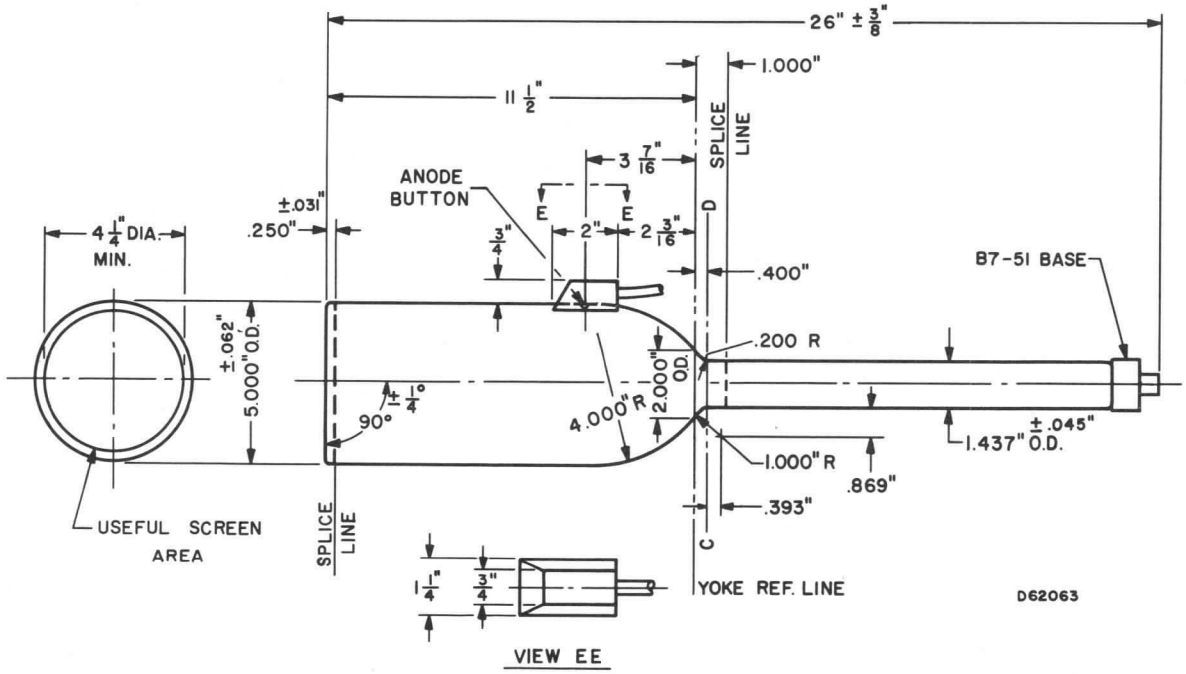

DESCRIPTION

The Sylvania Types SC-3179 and SC-3180 are short, electrostatic focus, magnetic deflection cathode-ray tubes with necks located off the bulb axis, intended for sector-scan radar applications. They feature low grid drive characteristic, small neck diameter to permit use of light weight, efficient deflection yokes, and 6.3 Volt, 300 Ma heaters. These types are similar except that SC-3179 has one inch shorter bulb body than SC-3180.

CHARACTERISTICS

GENERAL DATA

Focusing Method	Electrostatic
Deflecting Method	Magnetic
Maximum Deflection Angle (from Axis, Approx.)	SC-3179: 36°; SC-3180: 30 Degrees

Phosphor*	Fluorescence	Phosphorescence	Persistence
P7	Blue-White	Yellow	Long
P19	Orange	Orange	Long
P25	Orange	Orange	Long

Screen	Aluminized
Faceplate	Clear, Spherical

*In addition to the types shown, the SC-3179 and SC-3180 can be supplied with several other screen phosphors.

ELECTRICAL DATA

Heater Voltage	6.3 Volts
Heater Current	0.3 ± 10 % Ampere
Direct Interelectrode Capacitances (Approx.)	
Cathode to All Other Electrodes	3 pf
Grid No. 1 to All Other Electrodes	6.5 pf

MECHANICAL DATA

Minimum Useful Screen Diameter	4¼ Inches
Bulb	SC-3179: J39½S; SC-3180: LEA-698
Bulb Contact (Recessed Small Ball Cap)	J1-22
Base (9-Pin Miniature)[1]	E9-37
Basing	See Diagram
Weight	1¾ Pound

RATINGS

MAXIMUM RATINGS (Absolute Maximum Values)

Anode Voltage	12,500 Volts dc
Grid No. 4 Voltage (Focusing Electrode)	−100 to +500 Volts dc
Grid No. 2 Voltage	500 Volts dc
Grid No. 1 Voltage	
Negative Bias Value	100 Volts dc
Positive Bias Value	0 Volt
Positive Peak Value	0 Volt
Peak Heater-Cathode Voltage	
Heater Negative with Respect to Cathode	180 Volts
Heater Positive with Respect to Cathode	180 Volts

TYPICAL OPERATING CONDITIONS[4]

Anode Voltage	8000 Volts dc	
Grid No. 4 Voltage for Focus[2]	−40 to +250 Volts dc	
Grid No. 2 Voltage	250 Volts dc	
Grid No. 1 Voltage Required for Spot Cutoff	−10 to −25 Volts dc	
Line Width "A"[3]	0.014 Inch	Max.
Modulation[3]	20 Volts dc	Max.

CIRCUIT VALUES

Grid No. 1 Circuit Resistance	1.5 Megohms Max.

QUICK REFERENCE DATA

Radar Indicator
Sector Scan
5″ Direct Viewed
Round Glass Type
Offset Neck
Aluminized Screen
Magnetic Deflection
Electrostatic Focus
⅞ Inch Neck Diameter
6.3 Volt—300 Ma Heater
SC-3179: Short Length

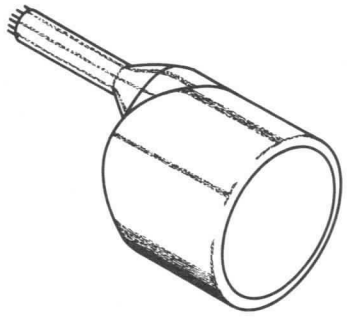

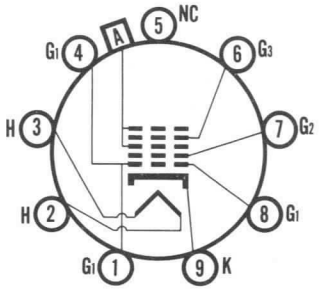

SYLVANIA ELECTRIC PRODUCTS INC.

Electronic Components Group
ELECTRONIC TUBE DIVISION
SENECA FALLS, NEW YORK

A Technical Publication

JUNE, 1964

File Under

SPECIAL AND GENERAL PURPOSE CATHODE RAY TUBES

NOTES:

1. *A socket with a center opening to clear the tubulation must be used. Care should be exercised to avoid damage to the tubulation.*
2. *With Grid No. 1 Voltage adjusted to give an anode current of 100 μa.*
3. *Measured per Mil-E-1 specifications at an anode current of 100 μa.*
4. *The P19 and P25 screens can be permanently damaged if current density is permitted to rise too high. To prevent burning, minimum beam current densities should be employed.*

WARNING:

X-ray radiation shielding may be necessary to protect against possible danger of personal injury from prolonged exposure at close range if this tube is operated at higher than the manufacturer's Maximum Rated Anode Voltage or 16,000 volts, whichever is less.

OUTLINE—SC-3180

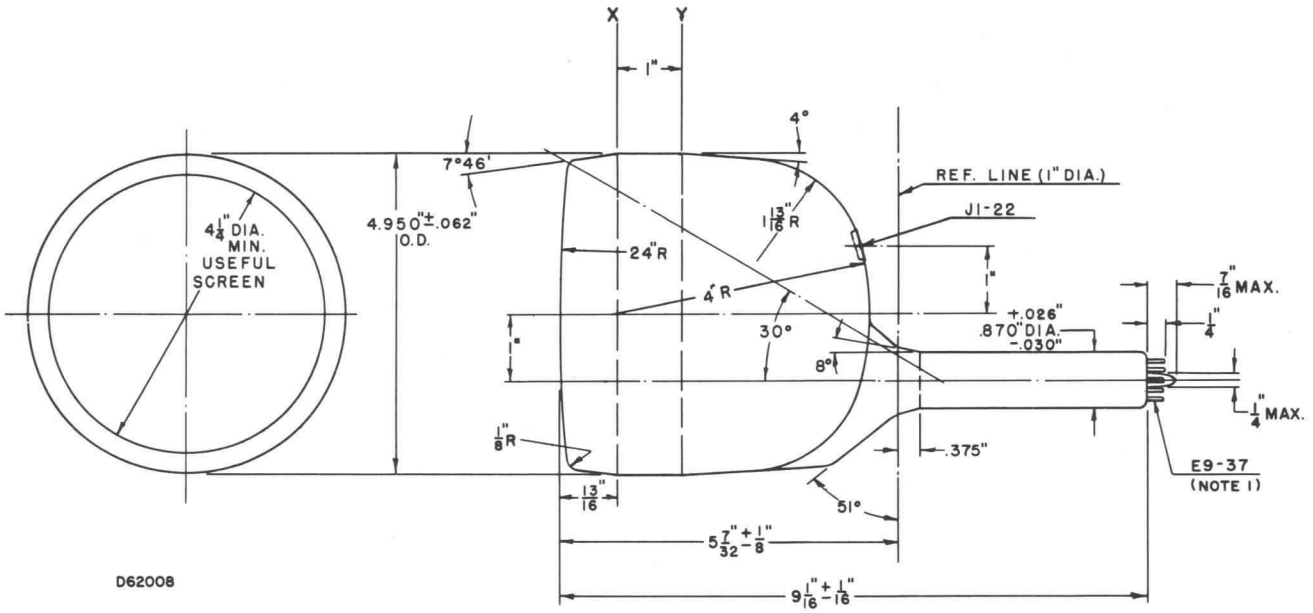

DIAGRAM NOTE:

1. *Mid-plane between base pins No. 1 and No. 9 aligns with bulb contact (J1-22), ±30°.*

OUTLINE—SC-3179

Dimensions are similar to SC-3180 except that X and Y planes are common, reducing body length to 4 7/32" and overall length to 8 1/16", and increasing deflection angle to 36 degrees approximate.

CHARACTERISTICS

GENERAL DATA

Focusing Method	Electrostatic
Deflecting Method	Magnetic
Deflection Angles (Approx.)	Diagonal 70 Degrees
Phosphor	Aluminized P4
Fluorescence	White
Persistence	Short to Medium
Faceplate, Cover Plate	See Table I

ELECTRICAL DATA

Heater Voltage	6.3 Volts
Heater Current	0.3 ± 10 % Ampere
Emission Warm-Up Time (Approx.)	30 Sec.
Direct Interelectrode Capacitance (Max.)	
Cathode to All Other Electrodes	10 pf
Grid No. 1 to All Other Electrodes	10 pf
External Conductive Coating to Anode	200-350 pf

MECHANICAL DATA

Minimum Useful Screen Dimensions	4⅜ x 5¾ Inches
Bulb Contact (Recessed Small Ball Cap)	J1-22
Base	E9-37
Basing	9HT
Bulb Contact has Radial Alignment about Tube Axis with Centerline Between Base Pins No. 1 and 9	±30 Degrees

RATINGS

MAXIMUM RATINGS (Absolute Maximum Values)

Anode Voltage	13,000 Volts dc
Grid No. 4 Voltage (Focusing Electrode)	−550 to +1100 Volts dc
Grid No. 2 Voltage	550 Volts dc
Grid No. 1 Voltage	
Negative Bias Value	155 Volts dc
Positive Bias Value	0 Volt dc
Positive Peak Value	2 Volts dc
Peak Heater-Cathode Voltage	±100 Volts

TYPICAL OPERATING CONDITIONS

Anode Voltage	10,000 Volts	Max.
Grid No. 4 for Focus	−125 to +300 Volts dc	
Grid No. 2 Voltage	300 Volts dc	
Grid No. 1 Voltage		
Required for Spot Cutoff	−40 to −60 Volts dc	
Brightness at 100 μa Anode Current	60 Ft. L.	Min.

CIRCUIT VALUE

Grid No. 1 Circuit Resistance	1.5 Megohm Max.

QUICK REFERENCE DATA

Monitor Tube
Electrostatic Focus
Magnetic Deflection
4⅜ x 5¾ Rectangular Screen
Bonded Shield
Anti-Reflection Treated
ST-3183A, ST-3183B,
ST-3183C, ST-3183E

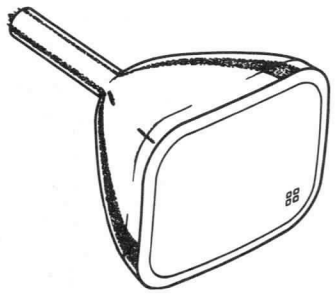

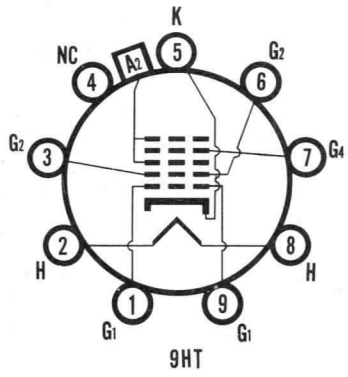

SYLVANIA ELECTRIC PRODUCTS INC.

Electronic Components Group
ELECTRONIC TUBE DIVISION
SENECA FALLS, NEW YORK

A Technical Publication

APRIL, 1964

File Under
SPECIAL AND GENERAL
PURPOSE CATHODE RAY TUBES

TABLE I

Approximate Face and Cover Transmittance by Type
All Covers Anti-reflection Coated

TYPE	FACE TRANS.	COVER TRANS.	COMBINED TRANS.
ST-3183	92 %	No Cover	92 %
ST-3183A	72 %	60 %	46 %
ST-3183B	92 %	32 %	30 %
ST-3183C	92 %	92 %	88 %
ST-3183D	72 %	No Cover	72 %
ST-3183E	92 %	14 %	15 %

OUTLINE

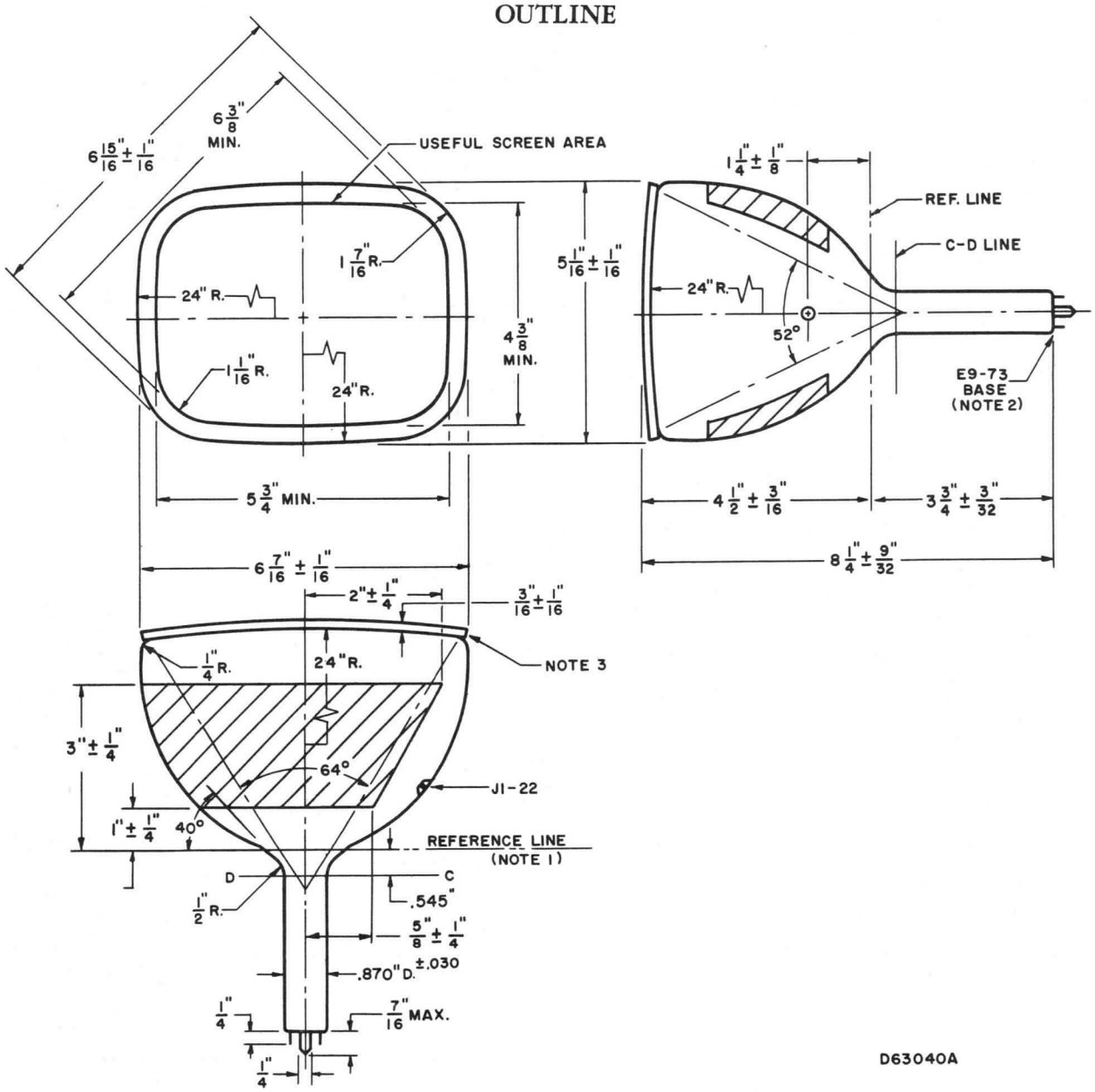

DIAGRAM NOTES:

1. *Reference line is determined by plane C-C' of JEDEC No G141 Reference Line Gauge, when the gauge is seated against the bulb.*
2. *Center plane between Pins 1 and 9 aligns with major axis of tube within 30° and is on same side as anode contact, J1-22.*
3. *Safety plate not to extend beyond mold match more than 1/8 inch.*

ADVANCE DATA

DESCRIPTION

Sylvania Type SC-3185 is a 21-inch rectangular cathode-ray tube for character writing and television display applications. It has two pairs of electrostatic deflection plates having high sensitivity and limited scan, for writing alpha-numeric characters and symbols, and uses 72 degree magnetic deflection for positioning the characters and for full-screen scanning.

CHARACTERISTICS

GENERAL DATA

Focusing Method	Electrostatic
Character Writing	Electrostatic
Deflection Method	Magnetic
Deflection Angles (Approx.)	
Vertical	53 Degrees
Horizontal	67 Degrees
Diagonal	72 Degrees
Phosphor*	P4
Fluorescence	White
Persistence	Short to Medium
Faceplate	Gray Filter Glass
Light Transmittance (Approx.)	75 Percent

*In addition to the type shown, the SC-3185 can be supplied with several other phosphors.

ELECTRICAL DATA

Heater Voltage	6.3 Volts
Heater Current	0.6 ± 5 % Ampere
Direct Interelectrode Capacitances (Approx.)	
Cathode to All Other Electrodes	5 pf
Grid No. 1 to All Other Electrodes	6.5 pf
D1 to D2	2 pf
D3 to D4	2.5 pf

MECHANICAL DATA

Minimum Useful Screen Dimensions	$19\frac{1}{16}$ x $15\frac{1}{16}$ Inches
Minimum Useful Screen Area	262 Sq. Inches
Bulb	J171B or J171F
Bulb Contact (Recessed Small Cavity Cap)	J1-21
Neck Contacts (5)	J1-25
Base (Short Small Shell Duodecal 6-Pin)	B6-203
Basing	See Diagram

RATINGS

MAXIMUM RATINGS (Absolute Maximum Values)

Anode Voltage[1]	22,000 Volts
Grid No. 4 (Focusing Electrode) Voltage	−550 to +1100 Volts
Grid No. 2 Voltage	700 Volts
Grid No. 1 Voltage	
Negative Bias Value	180 Volts
Negative Peak Value	220 Volts
Positive Bias Value	0 Volts
Positive Peak Value	2 Volts
Peak Heater-Cathode Voltage	
Heater Negative with Respect to Cathode	
During Warm-up Period Not to Exceed 15 Seconds	450 Volts
After Equipment Warm-up Period	200 Volts
Heater Positive with Respect to Cathode	200 Volts
Peak Voltage Between Anode and Any Deflection Plate	550 Volts

QUICK REFERENCE DATA

Character Writing Tube
21" Direct Viewed
Rectangular Glass Type
Spherical Faceplate
Gray Filter Glass
Low Voltage Electrostatic Focus
Electrostatic Character Writing
Magnetic Deflection
No Ion Trap
Aluminized Screen

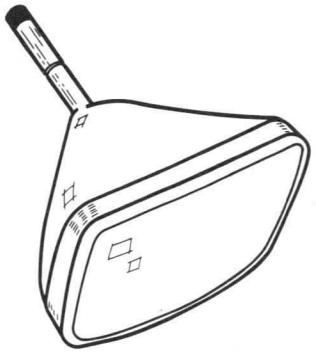

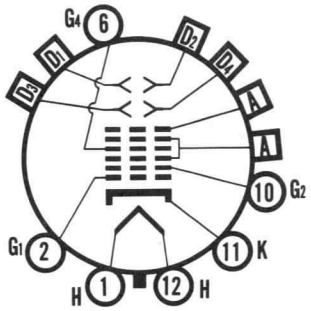

SYLVANIA
ELECTRONIC TUBES

A Division of
Sylvania Electric Products Inc.

PICTURE TUBE
OPERATIONS

SENECA FALLS, NEW YORK

Prepared and Released By The
TECHNICAL PUBLICATIONS SECTION
EMPORIUM, PENNSYLVANIA

JULY, 1963

File Under
SPECIAL AND GENERAL
PURPOSE CATHODE RAY TUBES

TYPICAL OPERATING CONDITIONS (Grid Drive Service)

Anode Voltage[1]	15,000 Volts	dc
Grid No. 4 Voltage for Focus	0 to +400 Volts	dc
Grid No. 2 Voltage	300 Volts	dc
Grid No. 1 Voltage Required for Cutoff[2]	−35 to −72 Volts	dc
Deflection Factors (Approx.)[3]		
D1-D2	170 Volts	dc/In.
D3-D4	185 Volts	dc/In.

CIRCUIT VALUES

Grid No. 1 Circuit Resistance	1.5 Megohms Max.
Deflection Circuit Resistance	5 Megohms Max.

NOTES:

1. *Connect both bulb and neck anode contacts to anode supply.*
2. *Visual extinction of focused raster. Extinction of the stationary focused spot will require that these values be about 5 volts more negative.*
3. *Useful electrostatic deflection is limited to ±1 inch on each axis.*

WARNING:

X-ray radiation shielding may be necessary to protect against possible danger of personal injury from prolonged exposure at close range if this tube is operated at higher than the manufacturer's Maximum Rated Anode Voltage or 16,000 volts, whichever is less.

OUTLINE

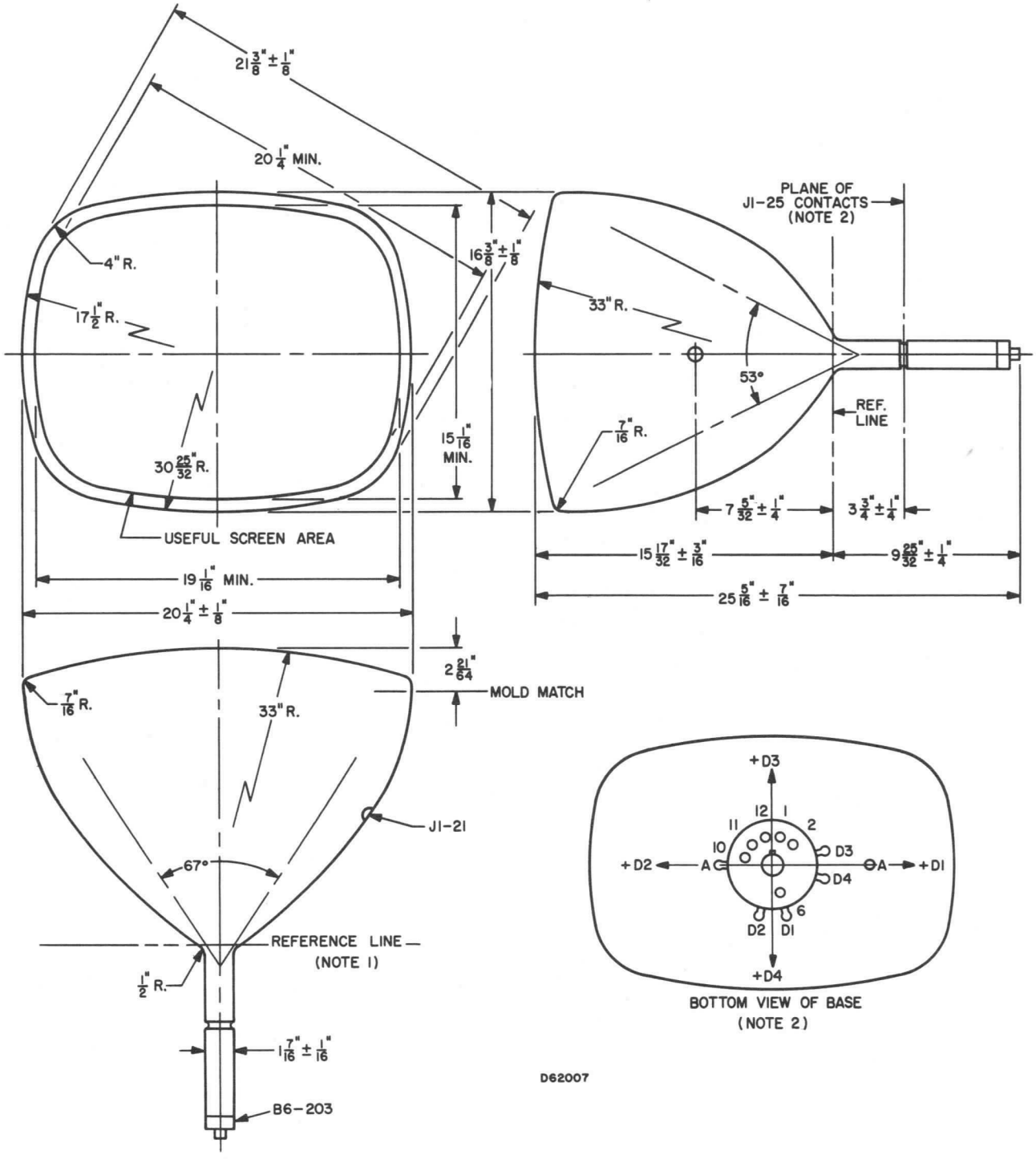

DIAGRAM NOTES:

1. *With the tube neck inserted through the flared end of Reference-Line Gauge (JEDEC No. 110) and with the tube seated in the gauge, the reference line is determined by the intersection of the Plane C-C' (face of the flared end) of the gauge with the glass funnel.*
2. *Deflection plates and anode are connected to J1-25 contacts which are recessed into neck. Alignment of contacts and orientation of deflection plates are shown at lower right.*

DESCRIPTION

A flat face 5″ high resolution electrostatically deflected and focused cathode ray tube. Monoaccelerator construction is employed for maximum resolution and minimum deflection defocusing and pattern distortion. Deflection electrodes are brought out through the neck wall to minimize lead inductance and capacitance.

CHARACTERISTICS

GENERAL DATA

Focus Method	Electrostatic
Deflection Method	Electrostatic
Phosphor*	P11

*The tube can be supplied in any of several standard phosphors if required.

ELECTRICAL DATA

Heater Voltage	6.3 Volts
Heater Current	0.600 ± 10 % Ampere

MECHANICAL DATA

Overall Length	$18\frac{5}{8} \pm \frac{3}{8}$ Inches
Face to Neck Contacts	$11\frac{1}{4} \pm \frac{1}{4}$ Inches
Neck Diameter	2 Inches
Face Diameter	5 Inches
Base	B12-37
Medium Shell Diheptal	12 Pin
Neck Buttons (7)	J1-25
	4 Deflection Plates
	1 A2 Contact
	1 Focus Contact
	1 Astigmatism
Bulb	J42P
Basing	See Diagram
Trace Angle Between 1D2 and 3D4 Traces	90 ± 1 Degree

Dynamic Focusing is Recommended for Optimum Operation.

MAXIMUM RATINGS

Anode A2 Voltage	11 Kv
Anode A1 Voltage	6 Kv
G2 Voltage	4 Kv
Grid No. 1 Voltage	
Negative Bias Value	220 Volts
Positive Bias Value	0 Volt
Positive Peak Value	2 Volts
Peak Heater Cathode Voltage	
Heater Negative with Respect to Cathode	200 Vdc
Heater Positive with Respect to Cathode	0 Vdc
Peak Voltage Between Anode No. 2 and Any Deflection Plate	800 Vdc

QUICK REFERENCE DATA

High Resolution for Photographic Recording
5″ Flat Face
High Resolution
Electrostatic Focus
Electrostatic Deflection
Monoaccelerator Construction
Deflection Contacts Brought Out Through Neck
SC-3195B—Aluminized Screen

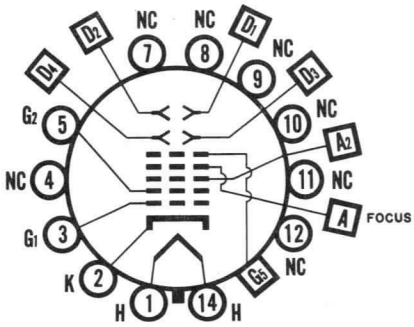

SYLVANIA ELECTRIC PRODUCTS INC.

Electronic Components Group
ELECTRONIC TUBE DIVISION
SENECA FALLS, NEW YORK

A Technical Publication

APRIL, 1964

File Under
SPECIAL AND GENERAL PURPOSE CATHODE RAY TUBES

TYPICAL OPERATING CONDITIONS

A2 Voltage	10,000 Volts DC
Astigmatism Voltage (G5)	10,000 ± 50 Volts
A1 Voltage (Focus)	4500-5500 Volts DC
G2 Voltage	2000 Volts DC
G1 Voltage for Cutoff	150 ± 20 % Volts
Deflection Factors	
1D2	285 ± 20 % Volts/In.
3D4	150 ± 20 % Volts/In.
Scan Size Minimum	
1D2	4 Inches
3D4	4 Inches
Line Width at 20 Volts Drive	0.003 Inches
Undeflected Spot Position	15 MM Sq.

GENERAL CONSTRUCTION AND QUALITY

The tube will be constructed and tested to comply with the applicable MIL-E-1D specifications.

OUTLINE

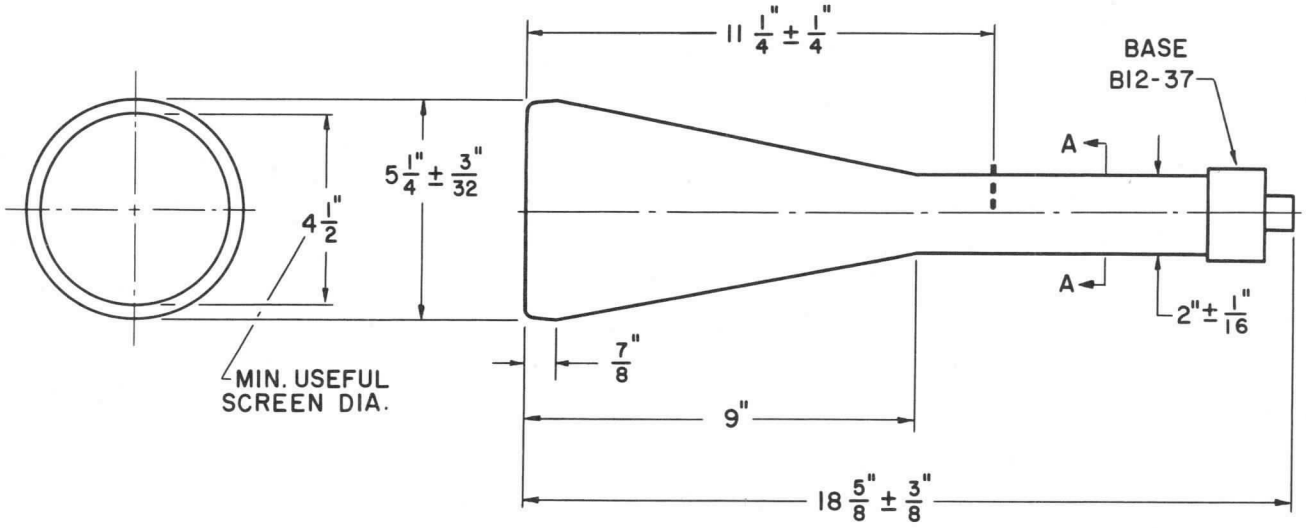

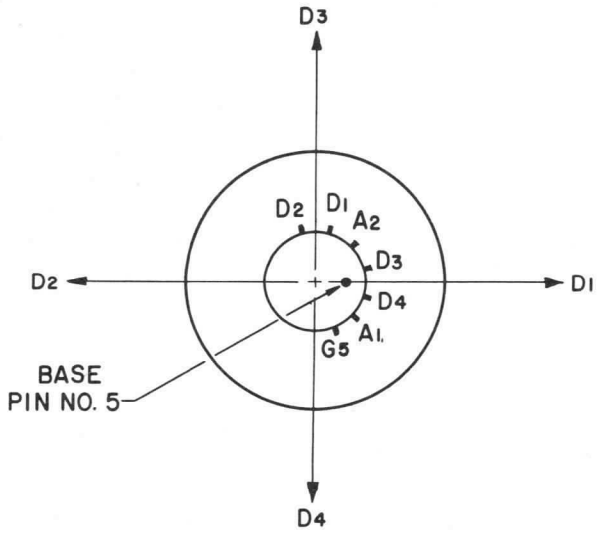

D64005

SECTION A-A
VIEW FROM BASE END OF TUBE

DESCRIPTION

The Sylvania Type SC-3304 is a cathode ray tube with a fiber optics strip inserted into the faceplate. This tube is designed for high resolution photographic recording. The fiber optics strip has an active area 2¾" long by ¼" wide. The electron-optical system and fine grain screen achieve very fine trace width with conventional focusing and deflection units and a simple beam-centering magnet.

CHARACTERISTICS

GENERAL DATA

Focusing Method	Magnetic
Deflection Method	Magnetic
Deflection Angle (Approx.)	30 Degrees
Phosphor*	Fine Grain P11, Aluminized
Fluorescence	Blue
Persistence	Short
Faceplate	Fiber Optics

*In addition to the phosphor shown, the SC-3304 can be supplied with several other screen phosphors.

ELECTRICAL DATA

Heater Voltage	6.3 Volts
Heater Current	0.6 ± 10 % Ampere
Direct Interelectrode Capacitances (Approx.)	
Grid No. 1 to All Other Electrodes	9 pf
Cathode to All Other Electrodes	4 pf

MECHANICAL DATA

Minimum Useful Fiber Optics Screen Size	2¾" x ¼"
Overall Length	16 ± ⅜ Inches
Base	B8-181
Basing	See Diagram

RATINGS

MAXIMUM RATINGS (Absolute Maximum Values)

Anode Voltage	25,000 Volts dc
Grid No. 2 Voltage	2500 Volts dc
Grid No. 1 Voltage	
Negative Bias Value	150 Volts dc
Positive Bias Value	0 Volt
Positive Peak Value	0 Volt
Peak Heater Cathode Voltage	
Heater Negative with Respect to Cathode	
During Warm-up Period Not to Exceed 15 Seconds	450 Volts
After Equipment Warm-up Period	165 Volts
Heater Positive with Respect to Cathode	165 Volts

TYPICAL OPERATING CONDITIONS

Anode Voltage	20,000 Volts dc
Grid No. 2 Voltage	2000 Volts dc
Grid No. 1 Voltage Required for Cutoff[1]	−33 to −77 Volts dc
Focusing Coil Current (Approx.)[2]	100 Ma
Line Width[3]	0.001 Inch

CIRCUIT VALUES

Grid No. 1 Circuit Resistance	1.5 Megohms Max.

QUICK REFERENCE DATA

High Resolution Tube
.001" Line Width
Fiber Optics Strip
(inserted in faceplate)
Extremely Fine Grain Screen
Magnetic Deflection
Magnetic Focus
No Ion Trap
Aluminized Screen

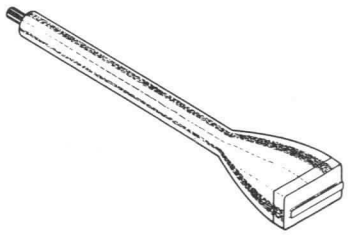

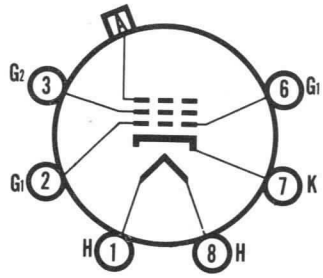

SC-3304

SYLVANIA ELECTRIC PRODUCTS INC.

Electronic Components Group
ELECTRONIC TUBE DIVISION
SENECA FALLS, NEW YORK

A Technical Publication

JUNE, 1964

File Under
SPECIAL AND GENERAL PURPOSE CATHODE RAY TUBES

NOTES:

1. *Visual extinction of undeflected focused spot.*
2. *For JEDEC focusing coil 106 or equivalent 2½" from reference line.*
3. *Line width measured at 5 μa by the shrinking raster method. Variable strength (0-10 gauss) beam centering magnet must be used for optimum line width.*

OUTLINE

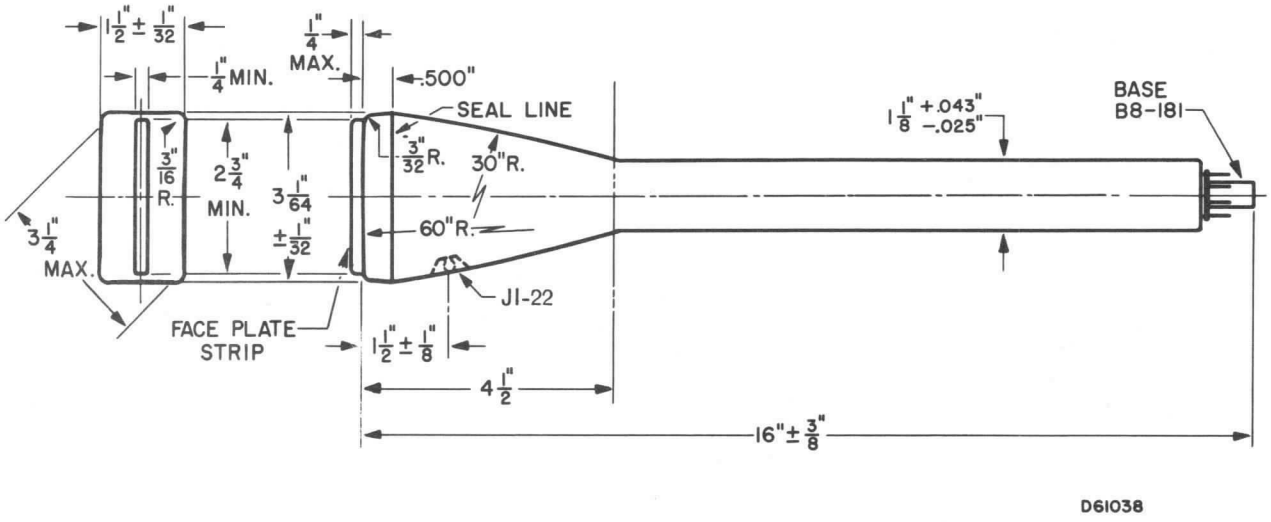

Base Alignment:

Centerline between Pin positions 4 and 5 aligns with major axis of tube face within 30°, and is on same side as anode contact (J1-22).

ADVANCE DATA

DESCRIPTION

The Sylvania SC-3369 is a 16″ diameter, all glass cathode ray tube for character writing applications. Two pairs of electrostatic deflection plates are provided for character generation while character positioning is by means of magnetic deflection. The tube is electrostatically focused and has an aluminized screen.

CHARACTERISTICS

GENERAL DATA

Focusing Method	Electrostatic
Deflecting Method[1]	Electrostatic and Magnetic
Bulb	J127B
Phosphor Number	P7
Fluorescent Color	Blue
Phosphorescent Color	Yellow
Persistence	Long

ELECTRICAL DATA

Heater Voltage	6.3 Volts
Heater Current at 6.3 Volts	0.6 ± 10 % Ampere
Direct Interelectrode Capacitances (Approx.)	
Cathode to All Other Electrodes	3.8 pf
Grid No. 1 to All Other Electrodes	7.5 pf
D1 to D2	1.0 pf
D3 to D4	1.0 pf
D1 to All Other Electrodes	2.8 pf
D2 to All Other Electrodes	2.8 pf
D3 to All Other Electrodes	3.1 pf
D4 to All Other Electrodes	2.8 pf

RATINGS (Design Center Values)

Accelerator Voltage	15,000 Volts dc	Max.
Accelerator Input	8 Watts	Max.
Focusing Electrode Voltage	5600 Volts dc	Max.
Grid No. 2 Voltage	700 Volts dc	Max.
Grid No. 1 Voltage		
Negative Bias Value	300 Volts dc	Max.
Positive Bias Value	0 Volt dc	Max.
Positive Peak Value	0 Volt	Max.
Peak Heater-Cathode Voltage		
Heater Negative with Respect to Cathode		
During Warm-up Period Not to Exceed 15 Seconds	410 Volts	Max.
After Equipment Warm-up Period	180 Volts	Max.
Heater Positive with Respect to Cathode	180 Volts	Max.
Peak Voltage Between Accelerator and Any Deflection Electrode	500 Volts	Max.

TYPICAL OPERATING CONDITIONS

Accelerator Voltage	12,000 Volts dc	
Focusing Electrode Voltage	3000 to 4400 Volts dc	
Grid No. 2 Voltage	400 Volts dc	
Grid No. 1 Voltage[3]	−35 to −70 Volts dc	
Modulation[2]	30 Volts	Max.
Line Width "A"[2]	0.012 Inch	Max.
Deflection Factors		
D1 and D2	315 to 385 Volts dc/Inch	
D3 and D4	330 to 410 Volts dc/Inch	
Focusing Electrode Current For Any Operating Condition	−10 to +5 μA	
Spot Position (Focused and Undeflected)[4]	Within a 25 mm Square	
Maximum Grid No. 2 Current For Any Operating Position	5 μA	

QUICK REFERENCE DATA

Character Writing Tube
16″ Diameter
Electrostatic and Magnetic Deflection
Electrostatic Focus
Aluminized Screen

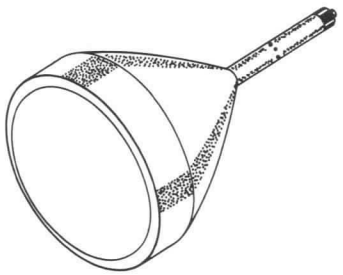

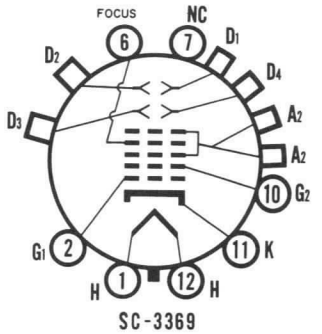

SYLVANIA ELECTRIC PRODUCTS INC.

Electronic Components Group
ELECTRONIC TUBE DIVISION
SENECA FALLS, NEW YORK

A Technical Publication

SEPTEMBER, 1964

PAGE 1 OF 2

File Under

SPECIAL AND GENERAL PURPOSE CATHODE RAY TUBES

MAXIMUM CIRCUIT VALUES

Grid No. 1 Circuit Resistance	1.5 Megohms Max.
Resistance in Any Deflecting-Electrode Circuit[5]	5.0 Megohms Max.

NOTES:

1. *The electrostatic deflection plates are designed to form a ½ inch square raster which can be deflected to any portion of the screen by the magnetic deflection yoke. Larger rasters may be used with a corresponding decrease in magnetic deflection area.*
2. *Measured in accordance with MIL-E-1 specifications, with Ib = 25 μA.*
3. *Visual extinction of the undeflected focused spot.*
4. *Connect deflecting electrodes to accelerator.*
5. *It is recommended that the deflecting electrode-circuit resistances be approximately equal.*

OUTLINE

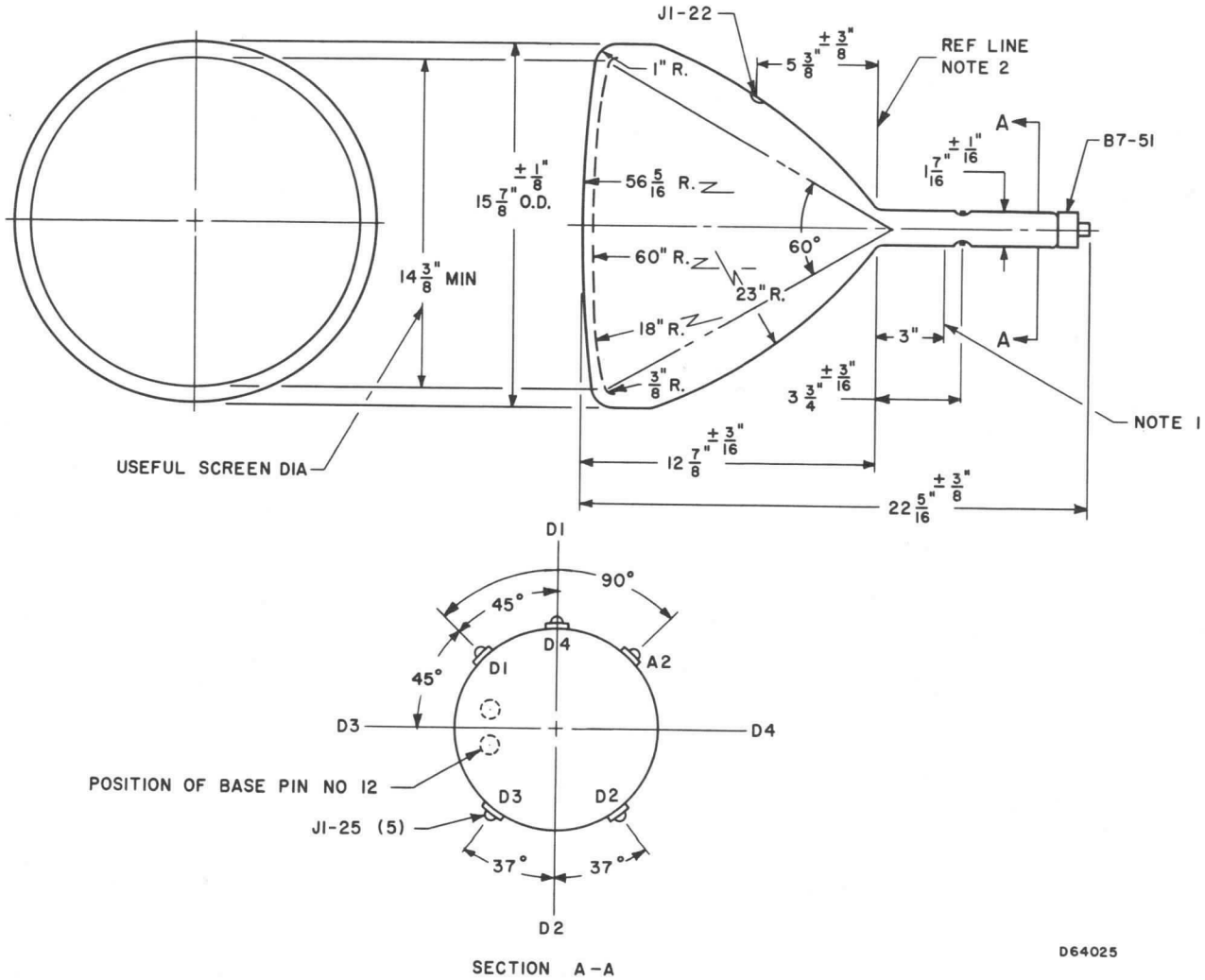

DIAGRAM NOTES:

1. *The magnetic deflection field should not extend below this line.*
2. *Point where JEDEC G-112 reference line gauge will stop.*

SYLVANIA

engineering data service

SYLVANIA
SC-3377
SC-3511
SC-3551
SC-3802

DESCRIPTION

Sylvania Types SC-3377, SC-3511, SC-3551, and SC-3802 are electrostatic focus and deflection cathode ray tubes with very high deflection sensitivity.

These types use helical-resistor post-deflection acceleration to achieve high writing rate, high deflection sensitivity, and freedom from pattern distortion.

The high deflection sensitivity and low heater power make these tubes particularly suitable for compact, transistorized portable equipments.

CHARACTERISTICS

GENERAL DATA

Focusing Method			Electrostatic
Deflection Method			Electrostatic
Screen Types*	Fluorescence	Phosphorescence	Persistence
P1	Green	—	Medium
P2	Blue-Green	Green	Long
P7	Blue-White	Yellow	Long
P11	Blue	—	Short
Faceplate			Clear

*In addition to the screens shown, these types can be supplied with several other screen phosphors.

ELECTRICAL DATA

	SC-3377	SC-3511 SC-3551 SC-3802	
Heater Voltage	6.3	1.5	Volts
Heater Current	0.6 ± 10 %	0.14 ± 10 %	Amperes

DIRECT INTERELECTRODE CAPACITANCES (Approximate)

Cathode to All Other Electrodes	5 pf
Grid No. 1 to All Other Electrodes	6 pf
Between Deflecting Plates 1-2[1]	3 pf
Between Deflecting Plates 3-4[1]	2 pf
Deflecting Plate 1 to All Other Electrodes	6 pf
Deflecting Plate 2 to All Other Electrodes	6 pf
Deflecting Plate 3 to All Other Electrodes	4 pf
Deflecting Plate 4 to All Other Electrodes	4 pf

MECHANICAL DATA

Minimum Useful Screen Dimensions (Rounded Corners) (SC-3377, SC-3511, and SC-3551)	$2\frac{7}{8}$ x $2\frac{7}{8}$ Inches
Minimum Useful Screen Diameter (SC-3802)	$2\frac{5}{8}$ Inches
Bulb Contact (Recessed Small Ball Cap)	J1-22
Neck Contacts (Anode No. 2 and Deflection Plates) (SC-3377 and SC-3511)	J1-25
Weight (Approx.)	1 ½ Pounds
Base (Small Shell Duodecal 12-Pin)	B12-43
Basing	Per Diagram
Base Alignment	
D1-D2 Trace Aligns with Pin No. 5 and Tube Axis	±10 Degrees
Positive Voltage on D1 Deflects Beam Approx. Toward Pin No. 5	
Positive Voltage on D3 Deflects Beam Approx. Toward Pin No. 2	
Bulb Contact Alignment	
J1-22 Contact Aligns with D1-D2 Trace	±10 Degrees
J1-22 Contact on Same Side as Pin No. 5	
Trace Alignment	
Angle Between D1-D2 and D3-D4 Traces	90 ± 1 Degrees

QUICK REFERENCE DATA

Oscilloscope Tube
Glass Type
Clear Faceplate
Electrostatic Focus
High Sensitivity
Electrostatic Deflection
Helical-Resistor Post
Deflection Acceleration
SC-3511, SC-3551 and SC-3802:
Very Low Heater Power

SC-3802

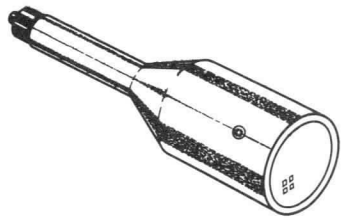

SC-3377
SC-3511
SC-3551

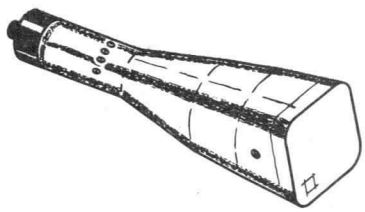

SYLVANIA ELECTRIC PRODUCTS INC.

Electronic Components Group
ELECTRONIC TUBE DIVISION
SENECA FALLS, NEW YORK

A Technical Publication
NOVEMBER, 1964

File Under
SPECIAL AND GENERAL PURPOSE CATHODE RAY TUBES

RATINGS

MAXIMUM RATINGS (Absolute Maximum Values)

Anode No. 2 Input		6.6 Watts	
Anode No. 3 Voltage		6600 Volts	dc
Anode No. 2 Voltage		2200 Volts	dc
Ratio of Anode No. 3 Voltage to Anode No. 2 Voltage[2]		5 : 1	
Anode No. 1 Voltage (Focusing Electrode)		1100 Volts	dc
Grid No. 1 Voltage			
Negative Bias Value		220 Volts	dc
Positive Bias Value		0 Volt	dc
Positive Peak Value		0 Volt	

	SC-3377	SC-3511 SC-3551 SC-3802	
Peak Heater-Cathode Voltage			
Heater Negative with Respect to Cathode	200	45 Volts	
Heater Positive with Respect to Cathode	200	0 Volts	
Peak Voltage Between Anode No. 2 and Any Deflecting Plate		600 Volts	
Post Deflection Accelerator Helix Resistance		600 Megohms	Max.
		200 Megohms	Min.

TYPICAL OPERATING CONDITIONS

Anode No. 3 Voltage	3000 Volts	
Anode No. 2 Voltage[3]	1000 Volts	
Anode No. 1 Voltage for Focus	0 to 300 Volts	
Grid No. 1 Voltage Required for Cutoff[4]	−30 to −50 Volts	
Deflection Factors[1]		
Deflecting Plates 1-2	27 to 33 Volts dc/Inch	
Deflecting Plates 3-4	23 to 29 Volts dc/Inch	
Modulation at Ib3 = 10 μa[5]	30 Volts dc	Max.
Line Width "A" at Ib3 = 10 μa[5]	.45 mm	Max.
Deflection Factor Uniformity[5]	2 Percent	Max.
Pattern Distortion[6]	2 Percent	Max.
Undeflected Spot Position[7]	Within a 10 mm Square	
Useful Scan	2 ½ Inches	Max.

CIRCUIT VALUES

Grid No. 1 Circuit Resistance	1.5 Megohms	Max.
Deflection Circuit Resistance[8]	1.0 Megohm	Max.

NOTES:

1. *Deflecting Plates D1 and D2 are nearer the screen, while deflecting plates D3 and D4 are nearer the base.*
2. *This tube is designed for optimum performance when operated at an Eb3/Eb2 ratio of 3.0. Operation at higher ratios of Eb3/Eb2 may result in changes of deflection uniformity and pattern distortion.*
3. *Under the typical operating conditions shown, the Anode No. 2 voltage should be variable from 940 to 1060 volts, to provide astigmatism adjustment. In order to maintain astigmatism control as cathode current is varied, it is recommended that the resistance in the Anode No. 2 circuit be limited to 12,500 ohms.*
4. *Visual extinction of undeflected focused spot.*
5. *Measured in accordance with MIL-E-1. Beam current (Ib3) is in addition to helix current in the Anode No. 3 circuit.*
6. *All portions of a raster pattern adjusted so its widest points just touch the sides of 2.295 x 2.295 inch square, will fall within the area bounded by the 2.295 x 2.295 inch square and an inscribed 2.205 x 2.205 inch square.*
7. *With the tube shielded and with the deflection plates connected to Anode No. 2. The limit square is centered on the tube face, with its sides parallel to the deflection axes.*
8. *It is recommended that the deflection electrode circuit resistances be approximately equal.*

BASING DIAGRAMS

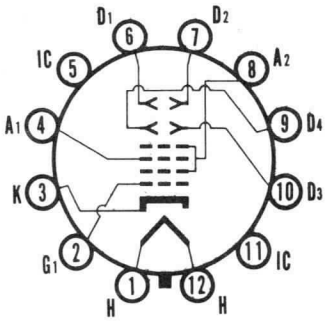

12-T

SC-3802
SC-3551

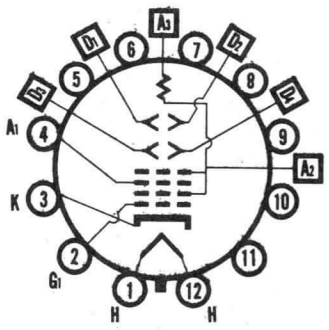

SC-3377
SC-3511

OUTLINE—SC-3802

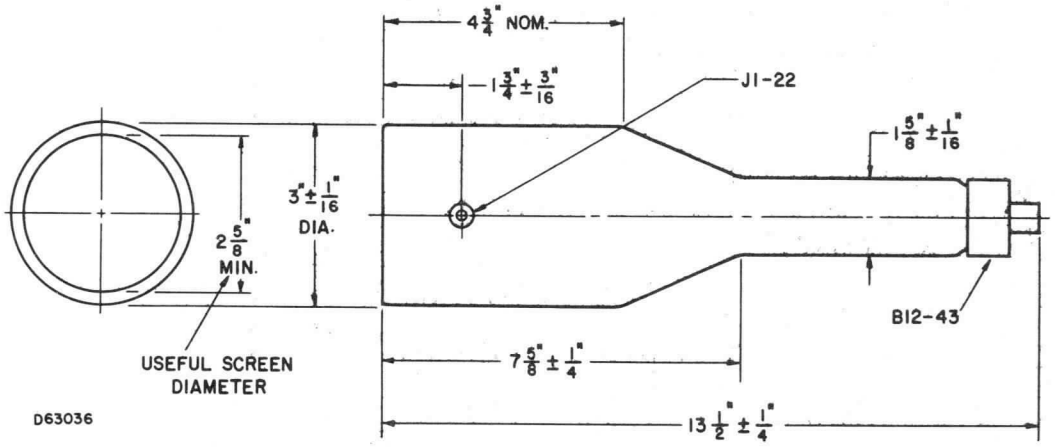

OUTLINE—SC-3377
SC-3511
SC-3551 (See Diagram Note)

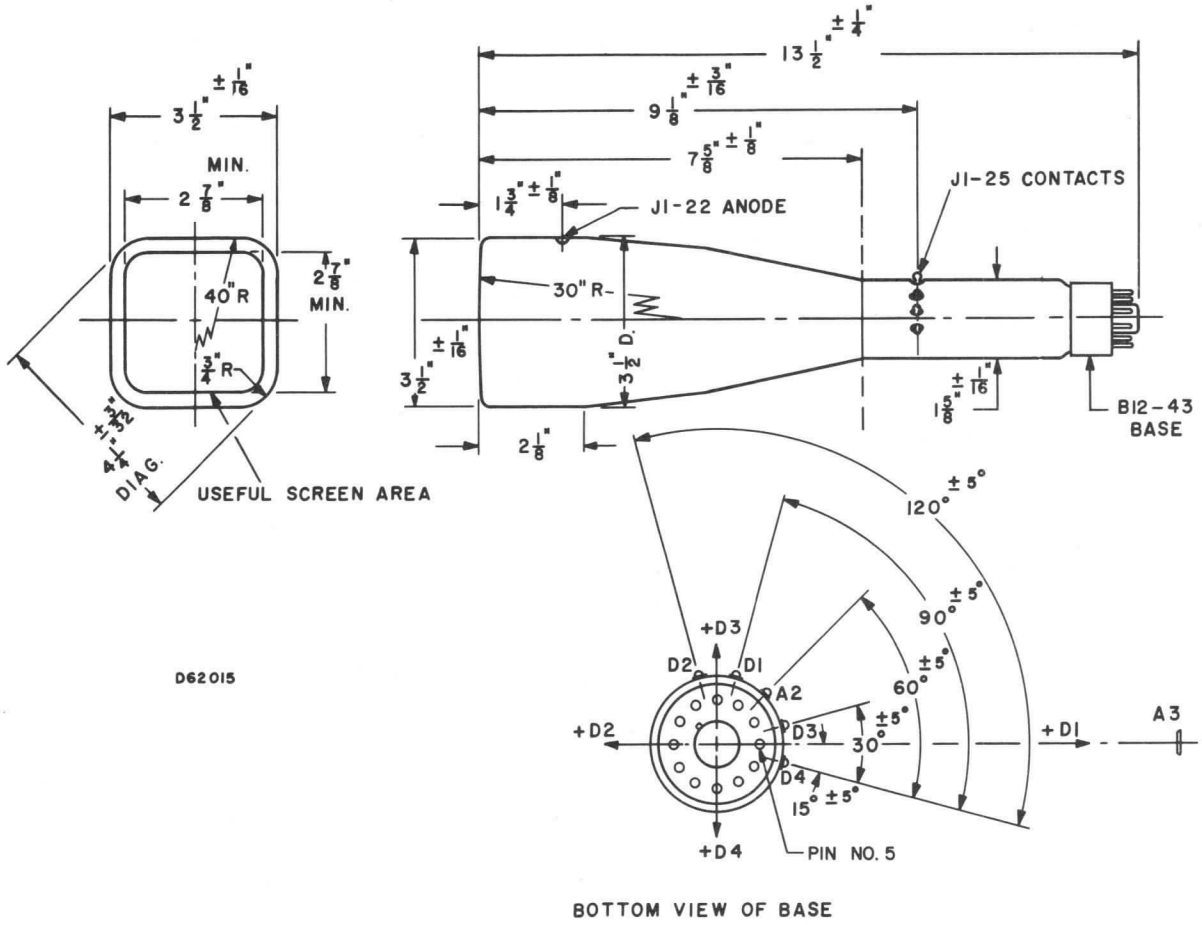

BOTTOM VIEW OF BASE

DIAGRAM NOTE:

SC-3551—deflection leads brought out through base.

DESCRIPTION

The Sylvania Type SC-3397 is a 4½" round faced, glass Cathode Ray Tube featuring electrostatic focusing and deflection. It is constructed in accordance with Mil-E-1.

GENERAL DATA

Focusing Method	Electrostatic
Deflection Method	Electrostatic
Phosphor*	P7
Fluorescence	Blue-Green
Phosphorescence	Green
Persistence	Long
Faceplate	Clear-Flat

**In addition to the P7 phosphor, the SC-3397 can be supplied with several other screen phosphors.*

ELECTRICAL DATA

Heater Voltage	6.3 Volts
Heater Current	1.2 ± 10 % Amperes

Direct Interelectrode Capacitances (Each Gun)

	Min.	Max.
Cathode to All	3.1	5.8 pf
Grid No. 1 to All	4.2	7.9 pf
D1 to D2	1.7	3.1 pf
D3 to D4	0.7	1.3 pf
D1 to All Except D2	2.7	6.1 pf
D2 to All Except D1	2.7	6.1 pf
D3 to All Except D4	2.1	4.0 pf
D4 to All Except D3	2.1	5.0 pf

MAXIMUM RATINGS (Absolute Maximum Values) (Each Gun)

Anode No. 3 Voltage	6600 Volts	
Anode No. 2 Voltage[1]	2860 Volts	dc
Ratio of Anode No. 3 Voltage to Anode No. 2 Voltage	2.3:1 Max.	
Anode No. 1 Voltage	1100 Volts	dc
Grid No. 1 Voltage		
Negative Bias Value	220 Volts	dc
Positive Bias Value	0 Volt	dc
Positive Peak Value	2 Volts	
Grid No. 2 Voltage	2860 Volts	dc
Grid No. 3 Voltage	2860 Volts	dc
Peak Heater-Cathode Voltage		
Heater Negative with Respect to Cathode	200 Volts	dc
Heater Positive with Respect to Cathode	200 Volts	dc
Peak Voltage Between Anode No. 2 and any Deflection Plate	550 Volts	
Post Accelerator Helix Resistance	200-600 Megohms	

TYPICAL OPERATING CONDITIONS (Each Gun)

Anode No. 3 Voltage	4000 Volts	dc
Anode No. 2 Voltage	2000 Volts	dc
Anode No. 1 Voltage for Focus	400 to 600 Volts	dc
Grid No. 1 Voltage for Cutoff[2]	−45 to −75 Volts	dc
Grid No. 2 Voltage	2000 Volts	dc
Grid No. 3 Voltage	1850-2150 Volts	dc

QUICK REFERENCE DATA

Radar Indicator Tube
2 Independent Guns
4½" Direct Viewed
Round Glass Type
Electrostatic Focus
Electrostatic Deflection
Clear, Flat Faceplate

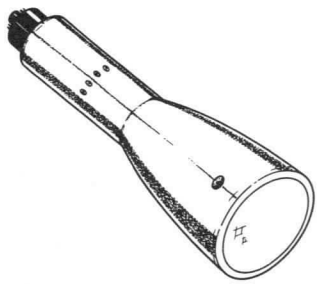

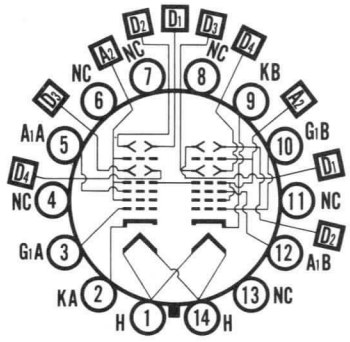

SYLVANIA
ELECTRONIC TUBES

A Division of
Sylvania Electric Products Inc.

PICTURE TUBE
OPERATIONS

SENECA FALLS, NEW YORK

Prepared and Released By The
TECHNICAL PUBLICATIONS SECTION
EMPORIUM, PENNSYLVANIA

DECEMBER, 1963

File Under
SPECIAL AND GENERAL
PURPOSE CATHODE RAY TUBES

DEFLECTION FACTOR[3]

Deflecting Plates 1-2	54 to 66 Volts	dc/Inch
Deflecting Plates 3-4	40 to 50 Volts	dc/Inch
Modulation (Anode 3 Current = 25 μa)	45 Volts	Max.
Line Width (Anode 3 Current = 25 μa)	0.030 Inches	Max.
Pattern Distortion[4]	2 ½ Percent	Max.
Useful Scan (Deflection Plates 1-2 and 3-4)[5]	4 Inches	
Undeflected Spot Position	Note 6	

CIRCUIT VALUES (Each Gun)

Grid No. 1 Circuit Resistance	1.5 Megohms Max.
Deflection Circuit Resistance	5 Megohms Max.

MECHANICAL GENERAL

Minimum Useful Screen Diameter	4 ½ Inches
Bulb Contact (Recessed Small Cavity Cap)	J1-21
Base (Medium Shell Diheptal 12-Pin)	B12-37
Angle Between Traces D1-D2 and D3-D4	
Gun A	90 ± 1 Degree
Gun B	90 ± 1 Degree
Bulb Contact Alignment	
J1-21 Contact Aligns with D1-D2 Trace[7] (Gun A and Gun B)	±10 Degrees

BASE ALIGNMENT

D1-D2 Traces (Gun A and Gun B) shall be Mutually Parallel to Diagonal through Tube Axis and Pin No. 5
D1-D2 Trace (Gun A) shall be Parallel to D1-D2 trace (Gun B) ± 1 Degree
D3-D4 (Gun A) shall be Aligned with D3-D4 Trace (Gun B) ± 3 Degrees
Positive Voltage on D1 (Gun A and Gun B) Deflects Beam Approx. Parallel to Diagonal through Tube Axis and Pin No. 5 toward the latter
Positive Voltage on D3 (Gun A and Gun B) Deflects Beam Approx. toward Pin No. 2

NOTES:

1. *The product of the Anode No. 2 Voltage and the Average Anode No. 2 Current should be limited to 6 watts.*
2. *Visual extinction of undeflected focused spot.*
3. *Deflection factor uniformity shall be not more than 2 %. Uniformity shall be measured in accordance with MIL-E-1, Section 4-12-11, for a scanned 3 inch square.*
4. *All edges of a raster pattern adjusted so its widest points just touch the sides of a 3.075 inch square will fall within the area bounded by the 3.075 inch square and an inscribed 2.925 inch square.*
5. *The useful scan shall be ±2 inches from the tube face center.*
6. *The undeflected spot positions shall fall between circles of radius of 3/16 and 13/16 inches from the tube face center. The spots of both sections of the cathode ray tube shall be symmetrically opposed around the tube axis.*
7. *J1-21 contact is on the same side and plane as Pin No. 5.*

OUTLINE

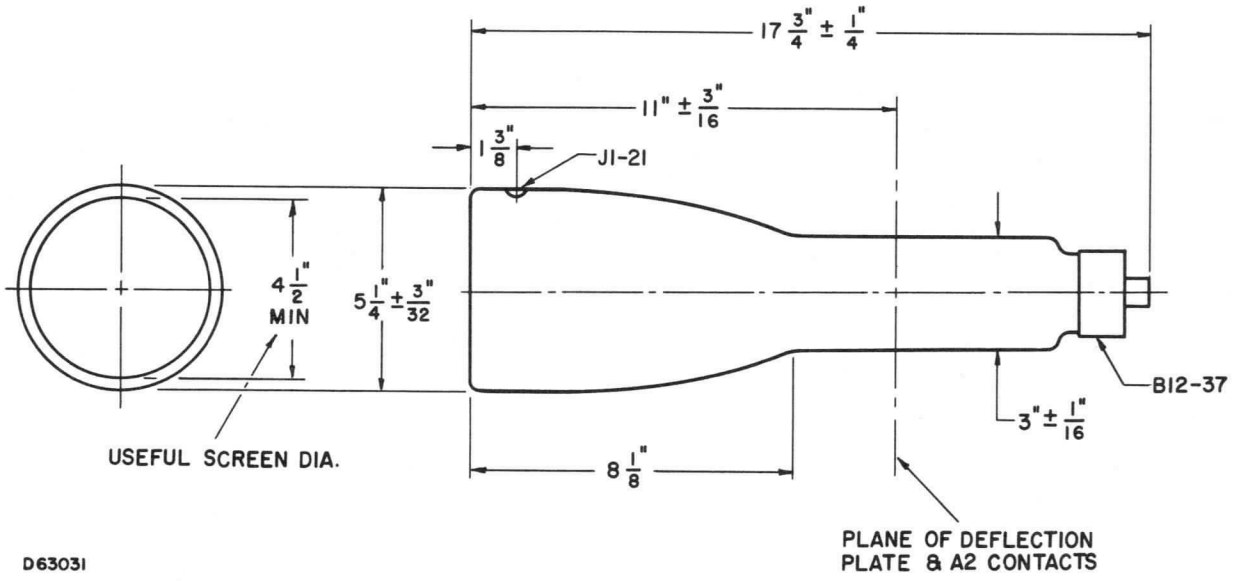
17 3/4" ± 1/4"
11" ± 3/16"
1 3/8"
J1-21
4 1/2" MIN
5 1/4" ± 3/32"
B12-37
3" ± 1/16"
USEFUL SCREEN DIA.
8 1/8"
PLANE OF DEFLECTION
PLATE & A2 CONTACTS
D63031

ADVANCE DATA

DESCRIPTION

The Sylvania SC-3399 is a 5 gun, electrostatically focused and deflected cathode-ray tube, 10 inches in diameter, for displaying simultaneously, 5 independently controlled traces. It features monoaccelerator design for maximum pattern linearity and deflection factor uniformity. All deflection plate leads are brought through the neck. An independent astigmatism electrode connection is provided, also brought through the neck, so that maximum resolution can be attained by the use of dynamic control of both focus and astigmatism voltages.

CHARACTERISTICS

GENERAL DATA[1]

Focusing Method	Electrostatic
Deflection Method	Electrostatic

Phosphor*	P1	P2	P7	P11
Fluorescence	Green	Blue-Green	Blue	Blue
Phosphorescence	—	Green	Yellow	—
Persistence	Medium	Long	Long	Short

*In addition to the types shown, the SC-3399 can be supplied with several other screen phosphors.

ELECTRICAL DATA

Heater Voltage	6.3 Volts
Heater Current	1.5 ± 10 % Amperes
Direct Interelectrode Capacitances (Approx.)	Each Gun
Cathode to All	6.5 pf
Grid No. 1 to All	7.9 pf
D1 to D2	2.6 pf
D3 to D4	2.0 pf
D1 to All Other Electrodes	8.0 pf
D2 to All Other Electrodes	8.0 pf
D3 to All Other Electrodes	5.0 pf
D4 to All Other Electrodes	5.0 pf

MECHANICAL DATA

Overall Length	21 ¼ ± ¼ Inches
Minimum Useful Screen Diameter	9 Inches
Bulb Contact (Recessed Small Ball Cap)	J1-22
Basing	See Diagram
Base and Contact Alignment	See Diagram
Positive Voltage on D1 Deflects the Beam Toward Base Key	±10 Degrees
Positive Voltage on D3 Deflects the Beam Approximately Toward Pin No. 23	
Bulb Contact (J1-22) Aligned Approximately with Base Key	
For Deflection Plate Lead Alignment with the Base and Bulb Contact—See Diagram	
Trace Alignment	
D1-D2 Trace Aligns with D3-D4 Trace (Each Gun)	90 ± 1 Degree
D1-D2 Traces of all Guns are Parallel	±1 Degree

MAXIMUM RATINGS (Absolute Maximum Values)

Anode Voltage	5500 Volts	dc
Focus Electrode Voltage	3000 Volts	dc
Grid No. 1 Voltage		
Negative Bias Value	220 Volts	dc
Positive Bias Value	0 Volt	dc
Positive Peak Value	2 Volts	dc
Peak Heater to Cathode Voltage		
Heater Negative with Respect to Cathode	200 Volts	
Heater Positive with Respect to Cathode	200 Volts	
Peak Voltage Between Anode and Astigmatism Electrode or any Deflecting Plate	1000 Volts	

QUICK REFERENCE DATA

Five Independent Guns
10″ Direct Viewed
Oscilloscope Tube
Round Glass Type
Electrostatic Focus
Electrostatic Deflection
Monoaccelerator Design
All Deflection Plate Leads Brought Through the Neck Wall

For Basing Diagram See Page 3

SYLVANIA ELECTRONIC TUBES

A Division of Sylvania Electric Products Inc.

PICTURE TUBE OPERATIONS

SENECA FALLS, NEW YORK

Prepared and Released By The TECHNICAL PUBLICATIONS SECTION EMPORIUM, PENNSYLVANIA

JULY, 1963

File Under

SPECIAL AND GENERAL PURPOSE CATHODE RAY TUBES

TYPICAL OPERATING CONDITIONS

Anode Voltage	5000 Volts	dc
Astigmatism Electrode Voltage	5000 Volts	dc
Focus Electrode Voltage	850 to 1500 Volts	dc
Grid No. 1 Voltage[2]	−100 to −175 Volts	dc
Line Width "A"[3]	.020 Inch	Max.
Deflection Factors		
D1-D2	70 to 100 Volts Per Inch	
D3-D4	60 to 85 Volts Per Inch	
Deflection Factor Uniformity[4]	1 ½ Percent	Max.
Undeflected Spot Position	Within 1 Inch Square	
Useful Scan		
D1-D2	±4 ½ Inches	
D3-D4	±3 ½ Inches	
Interaction Factor[5]	6 x 10^{-5} In./Volts	Max.

CIRCUIT VALUES

Grid No. 1 Circuit Resistance	1.5 Megohms	Max.
Deflection Circuit Resistance	1.0 Megohms	Max.

NOTES:

1. *Values are for each gun unless otherwise specified.*
2. *Visual extinction of undeflected focused spot.*
3. *Per MIL-E-1 and at a control grid voltage of 25 volts above spot cutoff.*
4. *The deflection factor (for both D1-D2 and D3-D4 plate pairs separately) for a deflection of 75 % of the minimum useful scan will not differ from the deflection factor at 25 % of the minimum useful scan by more than the indicated value.*
5. *The deflection of one beam when balanced dc voltages are applied to the deflection electrodes of either of the other two guns shall be less than the specified value.*

OUTLINE

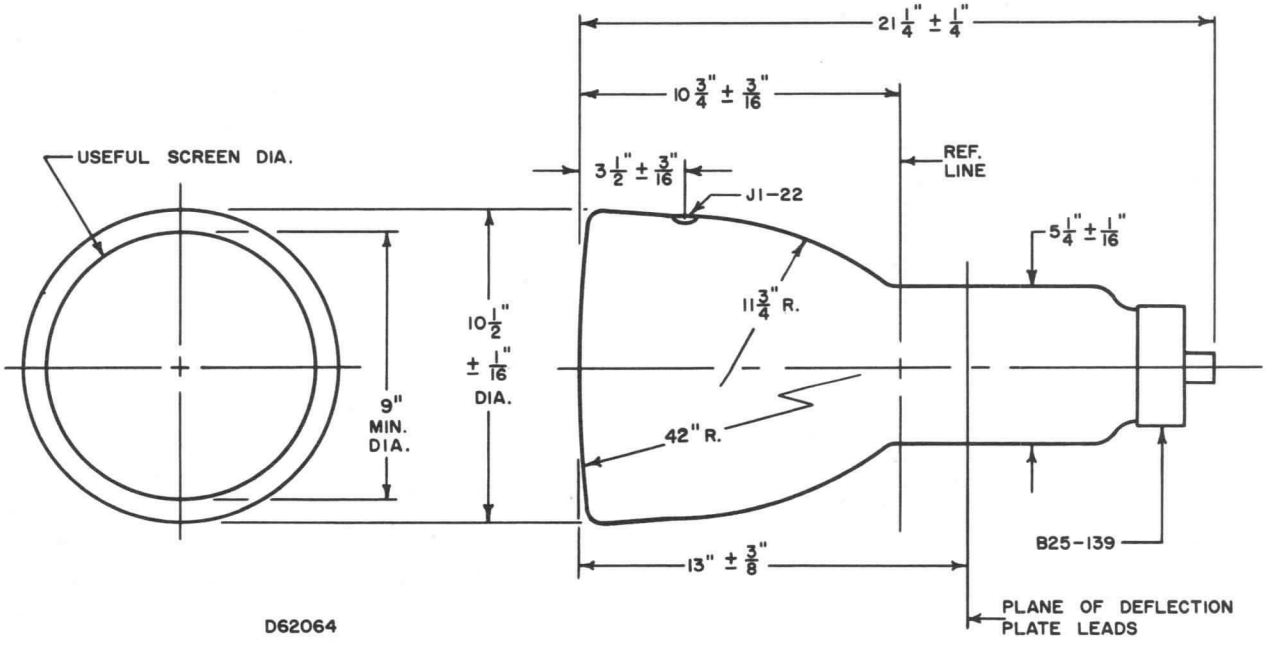

BASING DIAGRAM

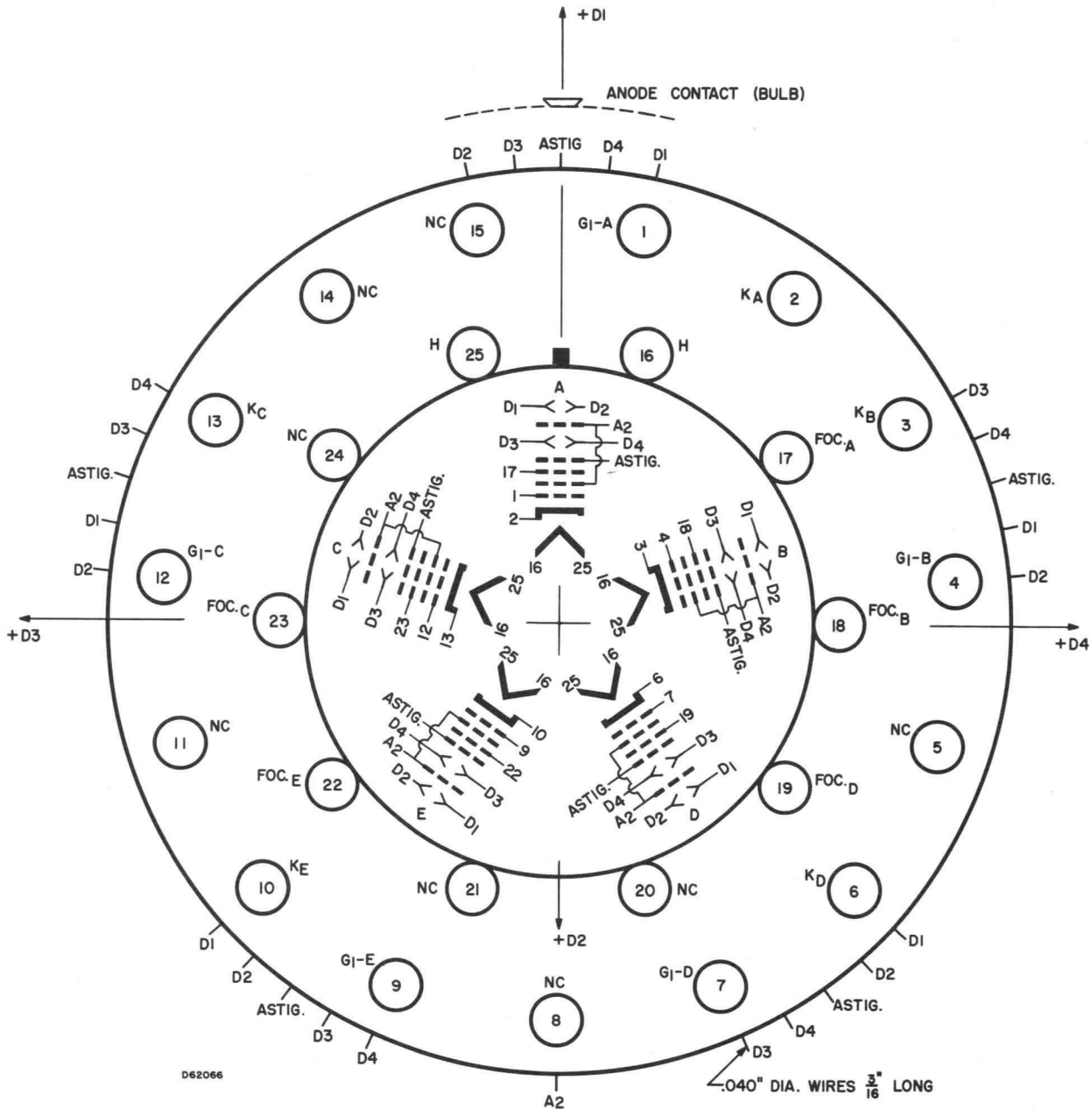

VIEW FROM BASE END OF TUBE

DESCRIPTION

Sylvania Type SC-3502 is a compact, 2″ round cathode ray tube designed for portable oscilloscope applications. It features a high efficiency 1.5 V, 140 ma heater for battery economy and lightweight design; and an electron gun of high deflection sensitivity. This low heater power design requires only 1/16 of the power necessary to operate a conventional 6.3 V, 600 ma heater.

GENERAL DATA

Focusing Method	Electrostatic
Deflection Method	Electrostatic
Phosphor*	P1
Fluorescent Color	Green
Phosphorescent Color	None
Persistence	Medium

*In addition to the phosphor shown, the SC-3502 can be supplied with several other screen phosphors.

ELECTRICAL DATA

Heater Voltage	1.5 Volts
Heater Current	0.140 ± 10 % Amperes
Direct Interelectrode Capacitances (Approx.) (Magnetic Shield Grounded)	
Grid No. 1 to All Other Electrodes	4.5 pf
D1 to D2	2.0 pf
D3 to D4	2.5 pf
D1 to All Other Electrodes	6.5 pf
D2 to All Other Electrodes	6.0 pf
D3 to All Other Electrodes	5.5 pf
D4 to All Other Electrodes	5.5 pf

MECHANICAL DATA

Overall Length	7 5/8 ± 3/16 Inches
Greatest Bulb Diameter	2 1/16 Inches
Minimum Useful Screen Diameter	1 3/4 Inches
Base Neo-eightar	B8-218
Basing	8KF
Base Alignment	
D1-D2 Trace Aligns with Pin No. 3 and Tube Axis	0 ± 10 Degrees
Positive Voltage on D1 Deflects Beam Approximately Toward Pin No. 3	
Positive Voltage on D3 Deflects Beam Approximately Toward Pin No. 5	
Trace Alignment	
Angle Between D3-D4 and D1-D2 Traces	90 ± 1 Degrees
Anode Contact	J1-21
Anode Contact is on same side as Pin No. 3	
Deflection Plates	
D1-D2 are nearest to the Screen	
D3-D4 are nearest to the Base	

MAXIMUM RATINGS (Design Center Values)

Anode Voltage (A2)	3000 Volts	dc
Anode (A2) Input	6 Watts	
Anode No. 1 (Focusing Electrode) Voltage	1200 Volts	
Grid No. 1 (G1) Voltage		
Negative Bias Value	140 Volts	dc
Positive Bias Value	0 Volts	dc
Positive Peak Value	2 Volts	
Peak Voltage Between Anode No. 2 and Any Deflecting Plate	550 Volts	
Altitude	35,000 Feet	

QUICK REFERENCE DATA

Oscilloscope Tube
2″ Direct Viewed
Round Glass Type
Electrostatic Deflection
Electrostatic Focus
Low Heater Power

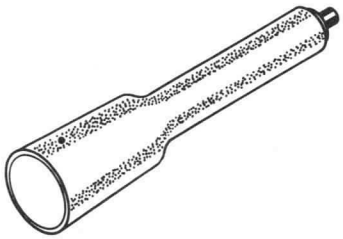

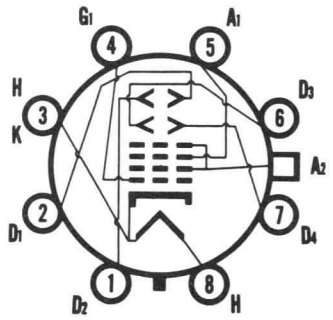

8KF

SYLVANIA ELECTRIC PRODUCTS INC.

Electronic Components Group
ELECTRONIC TUBE DIVISION
SENECA FALLS, NEW YORK

A Technical Publication

JULY, 1965

File Under

SPECIAL AND GENERAL PURPOSE CATHODE RAY TUBES

TUBE RATINGS

Focusing Electrode (A1) Current for Any Operating Conditions	−15 to ±10 μ Amp	
Spot Position, Undeflected	10 mm	Max.
A1 Voltage 20 % to 35 % of A2 Voltage		
G1 Voltage 3.5 % Max. of A2 Voltage		
Deflection Factors		
D1-D2	51 to 69 Volts DC/Inch/A2 Kilovolts	
D3-D4	29 to 39 Volts DC/Inch/A2 Kilovolts	

OPERATING CONDITIONS

	Typical	Typical	
Anode Voltage (A2)	1200	2000 Volts	
Focusing Electrode Volts (A1)	240 to 420	400 to 700 Volts	
G1 Voltage[2]	−24 to −42	−40 to −70 Volts	
Deflection Factor D1-D2	61 to 83	102 to 138 Volts	DC/In.
Deflection Factor D3-D4	34 to 47	58 to 78 Volts	DC/In.
Light Output[4]	3 FTL Min.		

MAXIMUM CIRCUIT VALUES

Grid No. 1 Resistance	1.5 Megohms
Resistance in Any Deflecting Electrode Circuit[3]	1.0 Megohms

NOTES:

1. *With tube shielded and deflecting electrodes connected to anode (A2).*
2. *Visual extinction of undeflected focused spot.*
3. *The resistance in each deflecting electrode circuit should be approximately equal.*
4. *Light Output shall be measured under the following conditions:*
   Eb2 = 1200 V
   Grid Drive = 20 Volts above spot cutoff
   Raster = 1" x 1" written with no retrace blanking at a vertical frequency of 60 cps and a horizontal frequency of 4500 cps.
   Light Meter = Weston Model 759 recalibrated with a ¾" active acceptance aperture.

OUTLINE

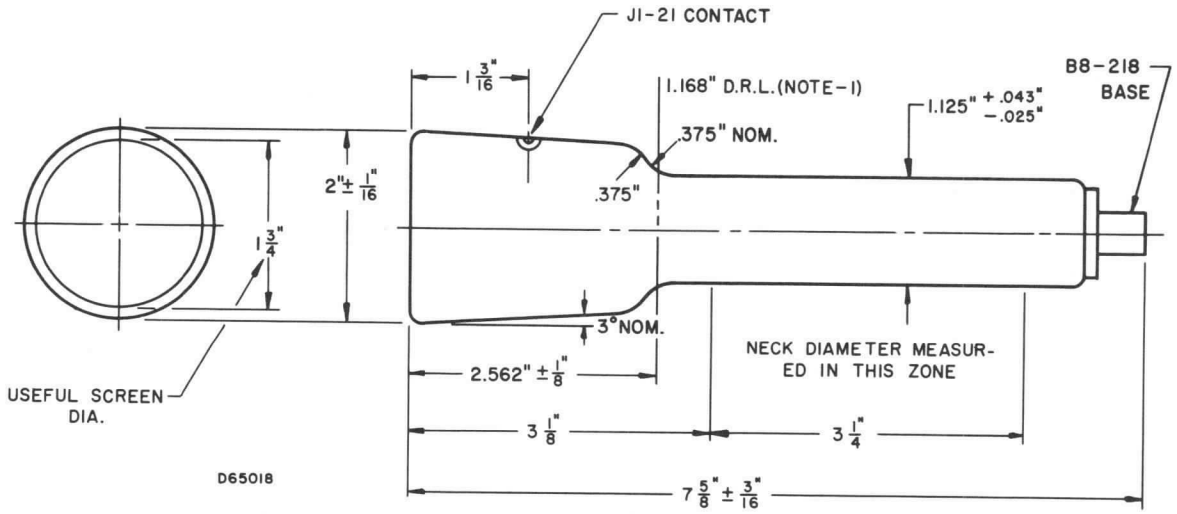

DIAGRAM NOTE:

1. *The leading edge of a 1.168" I.D. cylinder resting against the bulb cone will be 2.562" ± ⅛" from the face.*

DESCRIPTION

The Sylvania Types SC-3507, SC-3800 and SC-3876 are Cathode Ray Tubes with fiber optic strips inserted into the faceplate. They are intended for application of high resolution photographic recording. The fiber optics strip has an approximate active area $8\frac{11}{16}$ inches long by $\frac{1}{2}$ inch wide. The electron-optical system and fine grain screen achieve a very fine trace width with conventional focusing and deflection units and a simple beam centering magnet.

CHARACTERISTICS

GENERAL DATA

	SC-3507 SC-3876	SC-3800	
Focusing Method	Magnetic	Electrostatic	
Deflection Method	Magnetic	Magnetic	
Deflection Angle (Approx.)	55	55	Degrees
Phosphor (Fine Grain Aluminized)	P11	P11	
Fluorescence	Blue	Blue	
Persistence	Short	Short	
Faceplate	Fiber Optics	Fiber Optics	

MECHANICAL DATA

Overall Length	See Drawing	
Neck Diameter	$1\frac{7}{16}$	Inches
Face Dimensions	$3\frac{1}{2}$ x 10	Inches
Bulb Contact	J1-21	
Base	See Drawing	

FIBER OPTICS DATA

Useful Screen Size	$\frac{1}{2}$ x $8\frac{11}{16}$	Inches
Fiber Size (Single Clad)	8-20	Microns
Numerical Aperture	0.8	

RATINGS

MAXIMUM RATINGS (Absolute Values)

	SC-3507	SC-3800	SC-3876	
Anode Voltage	25,000	10,500	10,500	Volts
Focus Electrode Voltage	—	2500	—	Volts
Grid No. 2 Voltage	2500	770	2500	Volts
Grid No. 1 Voltage	0 to −150	0 to −150	0 to −150	Volts
Peak Heater Cathode Voltage				
Heater Negative with Respect to Cathode				
During Warm-up Period Not to Exceed 15 Secs.	450	400	400	Volts
After Equipment Warm-up	165	165	165	Volts
Heater Positive with Respect to Cathode	165	165	165	Volts

TYPICAL OPERATING CONDITIONS

Heater Voltage	6.3	6.3	6.3	Volts
Heater Current	0.6 ± 10 %	0.6 ± 10 %	0.6 ± 10 %	Amp
Anode Voltage[4]	20,000	10,000	10,000	Volts
Focus Voltage	—	1500-2500	—	Volts
Focus Electrode Current at Ib = 5 μa	—	50	—	μa Max.
Grid No. 2 Voltage	2000	500	2000	Volts
Grid No. 1 Voltage for Cutoff[1]	−33 to −77	−33 to −77	−33 to −77	Volts
Focusing Coil Current (Approx.)[2]	100	—	80	Ma
Line Width[3]	0.002	0.005	0.004	Inch Max.

QUICK REFERENCE DATA

Fiber Optics Tubes
High Resolution
Active Area $8\frac{1}{2}$" x $\frac{1}{2}$"
Very Fine Trace
Focusing
SC-3507 and SC-3876—Magnetic
SC-3800—Electrostatic
Deflection—Magnetic

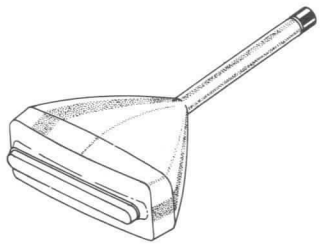

BASING

	SC-3507 SC-3876 Pin No.	SC-3800 Pin No.
Heater	1	1
Grid No. 1	2	2
Focus	—	6
Grid No. 2	10	10
Cathode	11	11
Heater	12	12

SYLVANIA ELECTRIC PRODUCTS INC.

Electronic Components Group
ELECTRONIC TUBE DIVISION
SENECA FALLS, NEW YORK

A Technical Publication

JUNE, 1964

PAGE 1 OF 2

File Under
SPECIAL AND GENERAL PURPOSE CATHODE RAY TUBES

CIRCUIT VALUES	SC-3507	SC-3800	SC-3876
Grid No. 1 Circuit Resistance	1.5	1.5	1.5 Megohms Max.

NOTES:

1. *Visual extinction of undeflected focused spot.*
2. *For JEDEC focusing coil 106 or equivalent, 2½ inches from reference line.*
3. *Line width measured at 5 μa by the shrinking raster method. Variable strength (0-10 gauss) beam centering magnet must be used for optimum line width.*
4. *SC-3507 must be operated with A2 or screen grounded and cathode at −20 KV. SC-3800 and SC-3876 must be operated only with anode grounded and cathode at −10 KV.*

OUTLINE

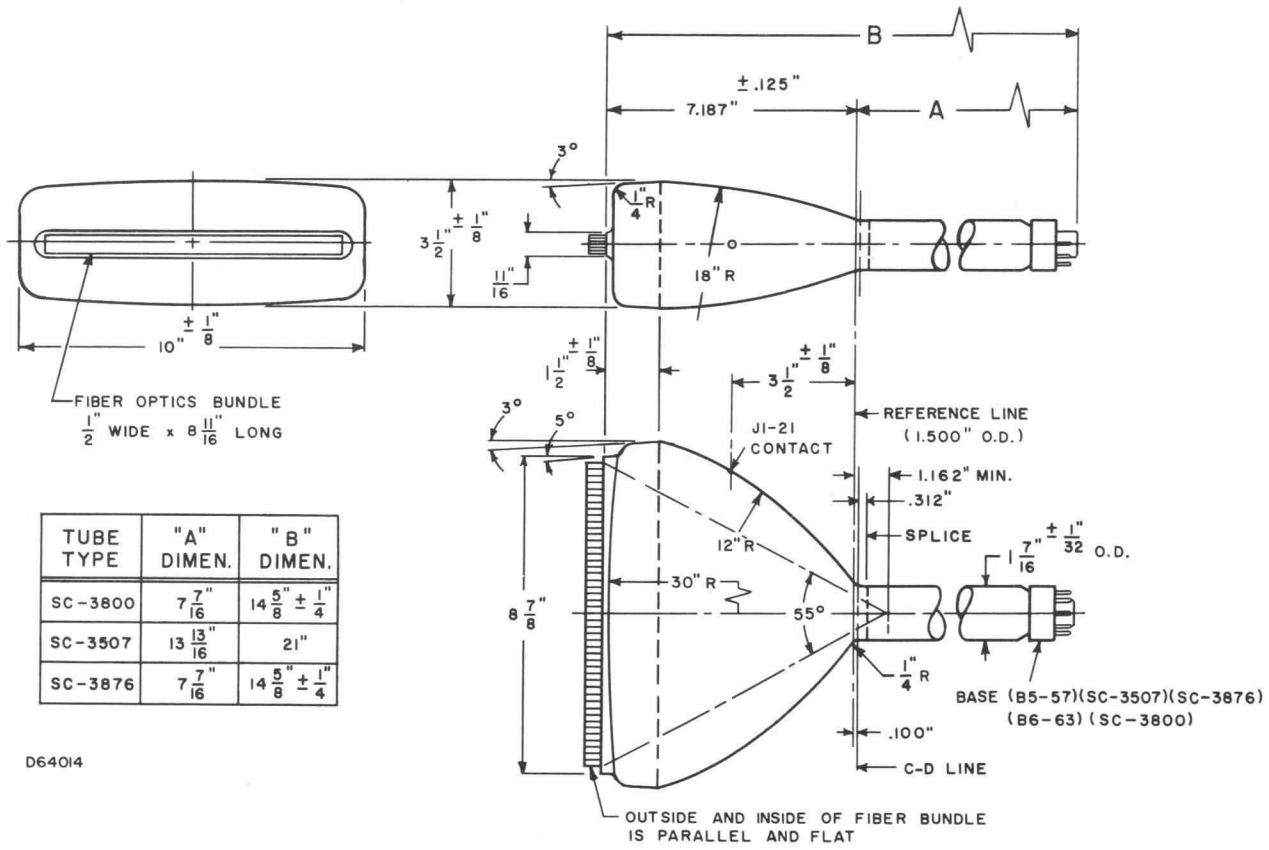

TUBE TYPE	"A" DIMEN.	"B" DIMEN.
SC-3800	7 7/16"	14 5/8" ± ¼"
SC-3507	13 13/16"	21"
SC-3876	7 7/16"	14 5/8" ± ¼"

D64014

DESCRIPTION

The Sylvania SC-3525 is a 2-gun, electrostatically focused and deflected cathode-ray tube for displaying simultaneously two independently controlled traces. It features linear post deflection acceleration for maximum pattern linearity and deflection factor uniformity. All deflection plate leads are brought through the neck. The screen is aluminized for high brightness. Potted, flying leads are used in place of a conventional base to minimize overall length.

CHARACTERISTICS

GENERAL DATA[1]

Focusing Method . . . . . Electrostatic
Deflection Method . . . . . Electrostatic

Types*	SC-3525 P1	SC-3525 P2	SC-3525 P7	SC-3525 P11
Fluorescence	Green	Blue-Green	Blue	Blue
Phosphorescence	—	Green	Yellow	—
Persistence	Medium	Long	Long	Short

**In addition to the types shown, the SC-3525- can be supplied with several other screen phosphors.*

ELECTRICAL DATA

Heater Voltage . . . . . 6.3 Volts
Heater Current (2 Guns in Parallel) . . . . . 1.08 to 1.32 Amperes
Direct Interelectrode Capacitances (Approx.)**

	Each Gun
Cathode to All	5.5 pf
Grid No. 1 to All	6.5 pf
D1 to D2	2.0 pf
D3 to D4	2.0 pf
D1 to All Other Electrodes	7.0 pf
D2 to All Other Electrodes	7.0 pf
D3 to All Other Electrodes	7.0 pf
D4 to All Other Electrodes	7.0 pf

***Exclusive of the basing leads.*

MECHANICAL DATA

Overall Length . . . . . $11\frac{5}{8} \pm \frac{3}{8}$ Inches
Minimum Useful Screen Dimensions . . . . . $2\frac{1}{4} \times 4\frac{1}{8}$ Inches
Bulb Contact (Recessed Small Ball Cap) J1-22
Basing . . . . . See Diagram
Base and Contact Alignment . . . . . See Diagram
Trace Alignment
D1-D2 Trace Aligns with D3-D4 Trace (Each Gun) 90 ± 1 Degree
D1-D2 and D3-D4 Traces of the 2 Guns are Parallel ± 1 Degree

MAXIMUM RATINGS (Absolute Maximum Values)

Anode No. 2 Input	6 Watts	
Anode No. 3 Voltage	7260 Volts	dc
Anode No. 2 Voltage	3630 Volts	dc
Ratio to Anode No. 3 Voltage to Anode No. 2 Voltage	2.4:1	
Anode No. 1 (Focus Electrode) Voltage	1650 Volts	dc
Grid No. 1 Voltage		
Negative Bias Value	220 Volts	dc
Positive Bias Value	0 Volt	dc
Positive Peak Value	2 Volts	dc
Peak Heater to Cathode Voltage		
Heater Negative with Respect to Cathode	200 Volts	
Heater Positive with Respect to Cathode	200 Volts	
Peak Voltage Between Anode and Astigmatism Electrode, or Any Deflecting Plate	750 Volts	

QUICK REFERENCE DATA

Two Independent Guns
$5\frac{1}{4}''$ x $3\frac{1}{4}''$ Direct Viewed
Oscilloscope Tube
Aluminized Screen
Spiral Accelerator
Rectangular Glass Type
Electrostatic Focus
Electrostatic Deflection
Compact Size
All Deflection Plate and Acceleration Leads Brought Through the Neck Wall

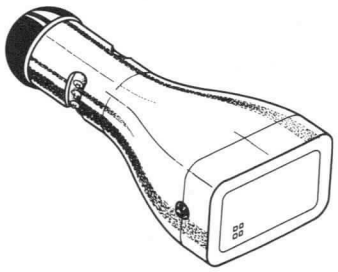

FOR BASING
SEE PAGE 3

SYLVANIA
ELECTRONIC TUBES

A Division of
Sylvania Electric Products Inc.

PICTURE TUBE
OPERATIONS

SENECA FALLS, NEW YORK

Prepared and Released By The
TECHNICAL PUBLICATIONS SECTION
EMPORIUM, PENNSYLVANIA

DECEMBER, 1963

File Under
SPECIAL AND GENERAL
PURPOSE CATHODE RAY TUBES

TYPICAL OPERATING CONDITIONS

Anode No. 3 Voltage	6000 Volts	dc
Anode No. 2 Voltage	2750 Volts	dc
Focus Electrode Voltage	730-540 Volts	dc
Grid No. 1 Voltage[2]	−66 to −110 Volts	dc
Line Width "A"[3]	0.018 Inches	Max.
Deflection Factors		
D1-D2	154-193 Volts Per Inch	
D3-D4	117-152 Volts Per Inch	
Deflection Factor Uniformity[4]	3 Percent	Max.
Undeflected Spot Positions[5]	Within 5/8 Inch Square	
Useful Scan[6]		
D1-D2	±1.12 Inches	
D3-D4	±2.06 Inches	
Interaction Factor[7]	5 x 10-5 In./Volts	Max.
Pattern Distortion[8]		
Maximum Ib3 at Cutoff	40 μadc	

CIRCUIT VALUES

Grid No. 1 Circuit Resistance	1.5 Megohms	Max.
Deflection Circuit Resistance	1.0 Megohm	Max.

NOTES:

1. *Values are for each gun unless otherwise specified.*
2. *Visual extinction of undeflected focused spot.*
3. *Per MIL-E-1 and at Ib3 of 25μa. (This current shall be in addition to the value of Ib3 read at cutoff.)*
4. *The deflection factor (for both D1-D2 and D3-D4 plate pairs separately) for a deflection of 75 % of the minimum useful scan will not differ from the deflection factor at 25 % of the minimum useful scan by more than the indicated value.*
5. *The shielded, undeflected focused spots will fall within a 5/8" square, the center of which coincides with geometric center of the tube face and the sides of which are parallel to the deflection axes.*
6. *Useful scan shall be measured from the center of the square as specified in Note 5 for spot centering.*
7. *The deflection of one beam when balanced dc voltages are applied to the deflection electrodes of the other gun shall be less than the specified value.*
8. *All portions of a raster pattern adjusted so its widest points just touch the sides of a 4.05 x 2.05 inch rectangle will fall within the area bounded by the 4.05 x 2.05 rectangle and an inscribed 3.95 x 1.95 rectangle.*

WARNING:

X-ray radiation shielding may be necessary to protect against possible danger of personal injury from prolonged exposure at close range if this tube is operated at higher than the manufacturer's Maximum Rated Anode Voltage or 16,000 volts, whichever is less.

OUTLINE

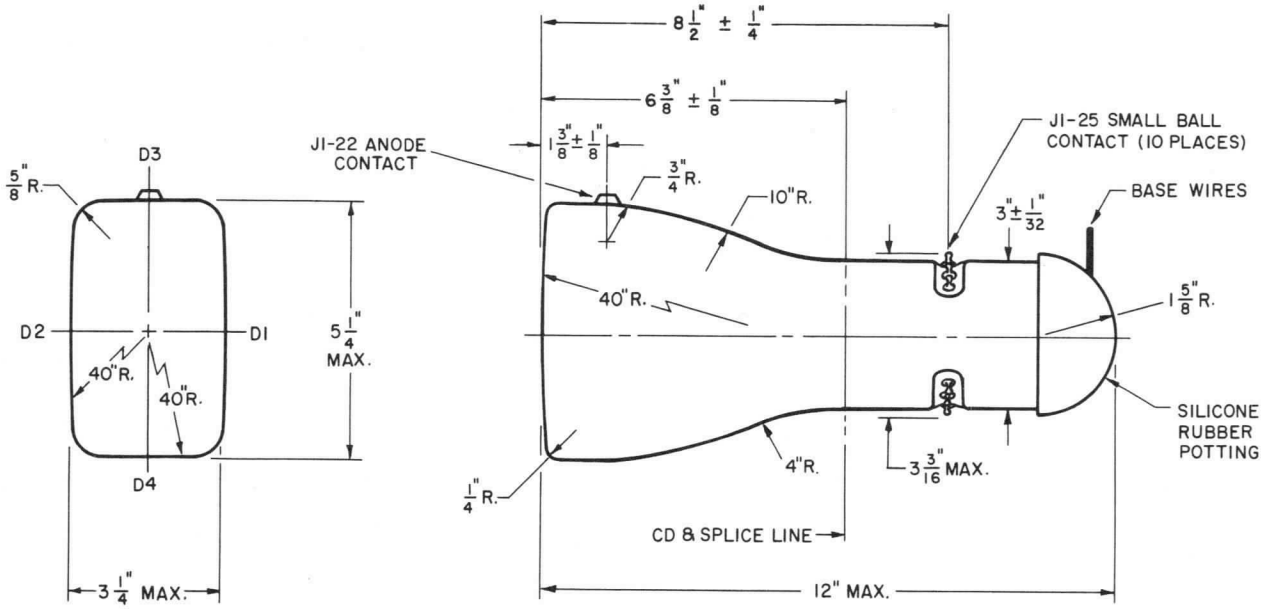

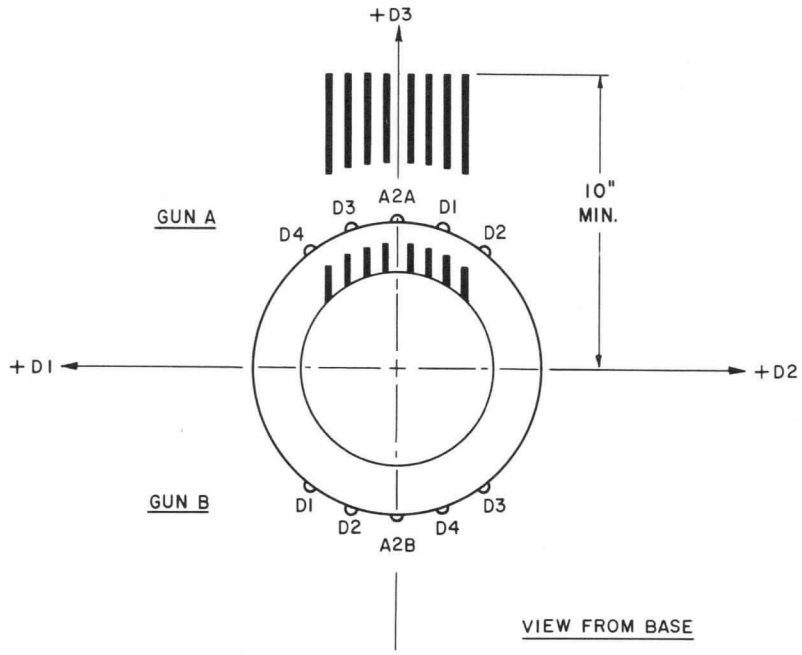

D63037

BASE WIRE COLOR CODE
From
LEFT to RIGHT

BLACK	H
BROWN	H
YELLOW	K-A
GREEN	GI-A
ORANGE	AI-A
RED	AI-B
BLUE	GI-B
WHITE	K-B

DESCRIPTION

The Sylvania SC-3557 is an ultra compact, magnetically deflected and low voltage electrostatically focused cathode ray tube. The screen, a special blend of phosphors, is aluminized, permitting its use in very high ambient light applications such as cockpit displays in high altitude fighter aircraft. Typical resolution is 150 lines per inch.

CHARACTERISTICS

GENERAL DATA

Focus Method	Electrostatic
Deflection Method	Magnetic
Phosphor, Aluminized	Modified P20
Face Plate	Gray, Non Browning

MECHANICAL DATA

Overall Length	5⅞ Inches
Neck Diameter	0.870
Face Diameter	3 Inches
Bulb Contact	Potted Anode Connector
Base	E9-37
Basing	9HT
Weight (Approx.)	8 Ozs.

MAXIMUM RATINGS (Absolute Maximum Values)

Anode Voltage	17,500 Volts
Focus Electrode Voltage	1100 Volts
Grid No. 2 Voltage	770 Volts
Grid No. 1 Voltage	0 to −150 Volts

TYPICAL OPERATING CONDITIONS

Heater Voltage	6.3 Volts
Anode Voltage	15 KV
Focus Voltage	−100 to +300 Volts
Grid No. 2 Voltage	500 Volts
Grid No. 1 Voltage for Cutoff	−33 to −77 Volts
Line Width @ 100 μa	0.008 Inches Max.
Light Output @ 100 μa (full screen raster)	600 FTL Min.

QUICK REFERENCE DATA

3″ Round Glass Type
Compact Design
High Brightness
Aluminized Screen with Special Phosphor Blend
Magnetic Deflection
Low Voltage Electrostatic Focus
Small (.840″) Neck Diameter

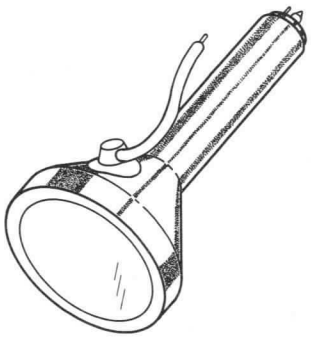

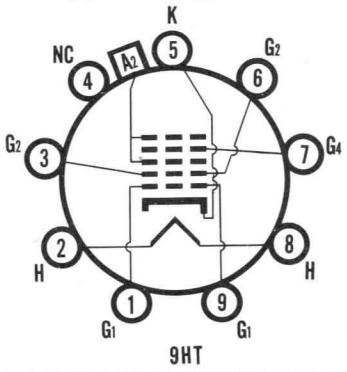

9HT

SYLVANIA ELECTRIC PRODUCTS INC.

Electronic Components Group
ELECTRONIC TUBE DIVISION
SENECA FALLS, NEW YORK

A Technical Publication

APRIL, 1964

File Under

SPECIAL AND GENERAL PURPOSE CATHODE RAY TUBES

OUTLINE

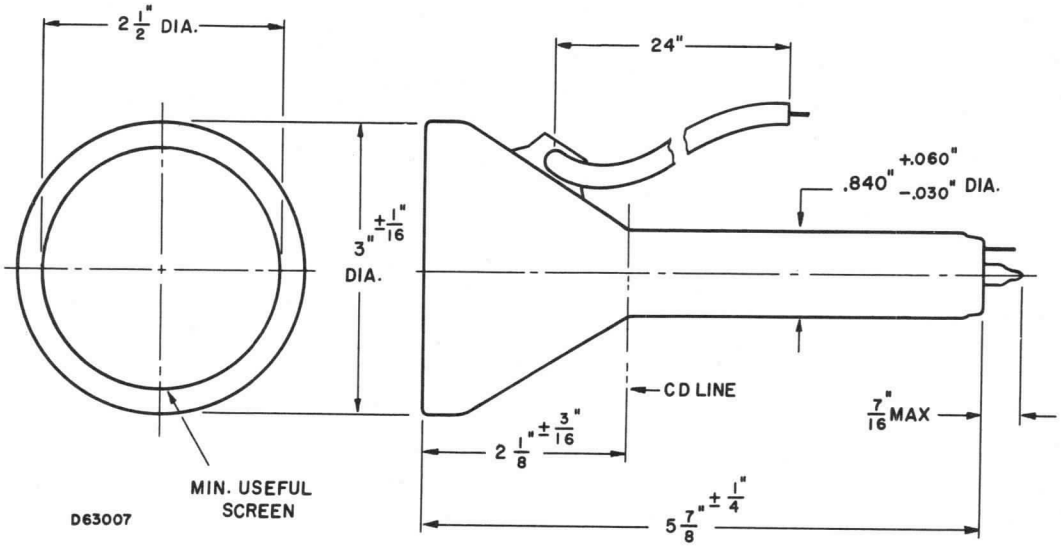
2 1/2" DIA.
24"
.840" +.060" -.030" DIA.
3" ±1/16" DIA.
CD LINE
7/16" MAX
2 1/8" ± 3/16"
MIN. USEFUL SCREEN
D63007
5 7/8" ± 1/4"

ADVANCE DATA

DESCRIPTION

The Sylvania SC-3561 is a 3 gun, electrostatically focused and deflected cathode-ray tube, for displaying simultaneously, 3 independently controlled traces. It features mono-accelerator design for maximum pattern linearity and deflection factor uniformity. All deflection plate leads are brought through the neck. In addition to high vertical deflection sensitivity, an independent astigmatism electrode connection is provided, also brought through the neck, so that maximum resolution can be attained by the use of dynamic control of both focus and astigmatism voltages.

QUICK REFERENCE DATA

Three Independent Guns
$6\frac{1}{32}$" x $4\frac{1}{32}$" Direct Viewed
Oscilloscope Tube
Round Glass Type
Electrostatic Focus
Electrostatic Deflection
Monaccelerator Design
All Deflection Plate Leads Brought Through the Neck Wall

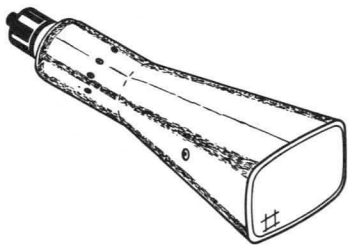

For Basing
Diagram See
Page 3

CHARACTERISTICS

GENERAL DATA[1]

Focusing Method	Electrostatic
Deflection Method	Electrostatic

Phospor*	P1	P2	P7	P11
Fluorescence	Green	Blue-Green	Blue	Blue
Phosphorescence	—	Green	Yellow	—
Persistence	Medium	Long	Long	Short

*In addition to the types shown, the SC-3561P- can be supplied with several other screen phosphors.

ELECTRICAL DATA

Heater Voltage	6.3 Volts
Heater Current (3 Guns in Parallel)	1.62 to 1.98 Amperes
Direct Interelectrode Capacitances (Approx.)	Each Gun
Cathode to All	5.5 pf
Grid No. 1 to All*	6.5 pf
D1 to D2	2.5 pf
D3 to D4	1.5 pf
D1 to All Other Electrodes	7.5 pf
D2 to All Other Electrodes	7.5 pf
D3 to All Other Electrodes	4.5 pf
D4 to All Other Electrodes	4.5 pf
*Value for B Gun Only	10 pf

MECHANICAL DATA

Overall Length	18 ½ ± ⅜ Inches
Minimum Useful Screen Diameter	3 ¼ x 5 ¼ Inches
Bulb Contact (Recessed Small Ball Cap)	J1-22
Basing	See Diagram
Base and Contact Alignment	See Diagram
Trace Alignment	
D1-D2 Trace Aligns with D3-D4 Trace (Each Gun)	90 ± 1 Degree
D1-D2 Traces of the 3 Guns are Parallel	± 1 Degree

MAXIMUM RATINGS (Absolute Maximum Values)

Anode Voltage	5500 Volts	dc
Focus Electrode Voltage	3000 Volts	dc
Grid No. 1 Voltage		
Negative Bias Value	220 Volts	dc
Positive Bias Value	0 Volt	dc
Positive Peak Value	2 Volts	dc
Peak Heater to Cathode Voltage		
Heater Negative with Respect to Cathode	200 Volts	
Heater Positive with Respect to Cathode	200 Volts	
Peak Voltage Between Anode and Astigmatism Electrode, or Any Deflecting Plate	750 Volts	

SYLVANIA
ELECTRONIC TUBES
A Division of
Sylvania Electric Products Inc.
PICTURE TUBE
OPERATIONS
SENECA FALLS, NEW YORK

Prepared and Released By The
TECHNICAL PUBLICATIONS SECTION
EMPORIUM, PENNSYLVANIA

JULY, 1963

File Under
SPECIAL AND GENERAL
PURPOSE CATHODE RAY TUBES

TYPICAL OPERATING CONDITIONS

Anode Voltage	5000 Volts	dc
Astigmatism Electrode Voltage	5000 Volts	dc
Focus Electrode Voltage	1500-2500 Volts	dc
Grid No. 1 Voltage[2]	−50 to −90 Volts	dc
Line Width "A"[3]	.016 Inch	Max.
Deflection Factors		
D1-D2	120-150 Volts Per Inch	
D3-D4	65 to 85 Volts Per Inch	
Deflection Factor Uniformity[4]	1 ½ Percent	Max.
Undeflected Spot Positions[5]	Within ½ Inch Square	
Useful Scan[6]		
D1-D2	Full Screen	
D3-D4	±1 ½ Inches	
Interaction Factor[7]	6×10^{-5} In./Volts	Max.
Pattern Distortion[8]		

CIRCUIT VALUES

Grid No. 1 Circuit Resistance	1.5 Megohms	Max.
Deflection Circuit Resistance	1.0 Megohms	Max.

NOTES:

1. *Values are for each gun unless otherwise specified.*
2. *Visual extinction of undeflected focused spot.*
3. *Per MIL-E-1 and at a control grid voltage of 15 volts above spot cutoff.*
4. *The deflection factor (for both D1-D2 and D3-D4 plate pairs separately) for a deflection of 75 % of the minimum useful scan will not differ from the deflection factor at 25 % of the minimum useful scan be more than the indicated value.*
5. *Guns will be on parallel axes. Spot centering as follows:*
   One gun on horizontal center line 5/8" to left
   One gun ¾" above horizontal center line 5/8" to right
   One gun ¾" below horizontal center line 5/8" to right
6. *Useful scan shall be measured from the center of the square as specified in Note 5 for spot centering.*
7. *The deflection of one beam when balanced dc voltages are applied to the deflection electrodes of either of the other two guns shall be less than the specified value.*
8. *The total horizontal movement of the left or right end of a 5" horizontal trace, produced by any of the three guns, when deflected vertically ¾ inches above or below its normal position, shall not exceed .050 inches.*

   The total vertical movement of the upper or lower end of a 1 ½ inch vertical trace produced by any of the three guns, when any one or all beams are deflected horizontally for the full 5 inches of sweep, shall be less than .075 inches.

OUTLINE

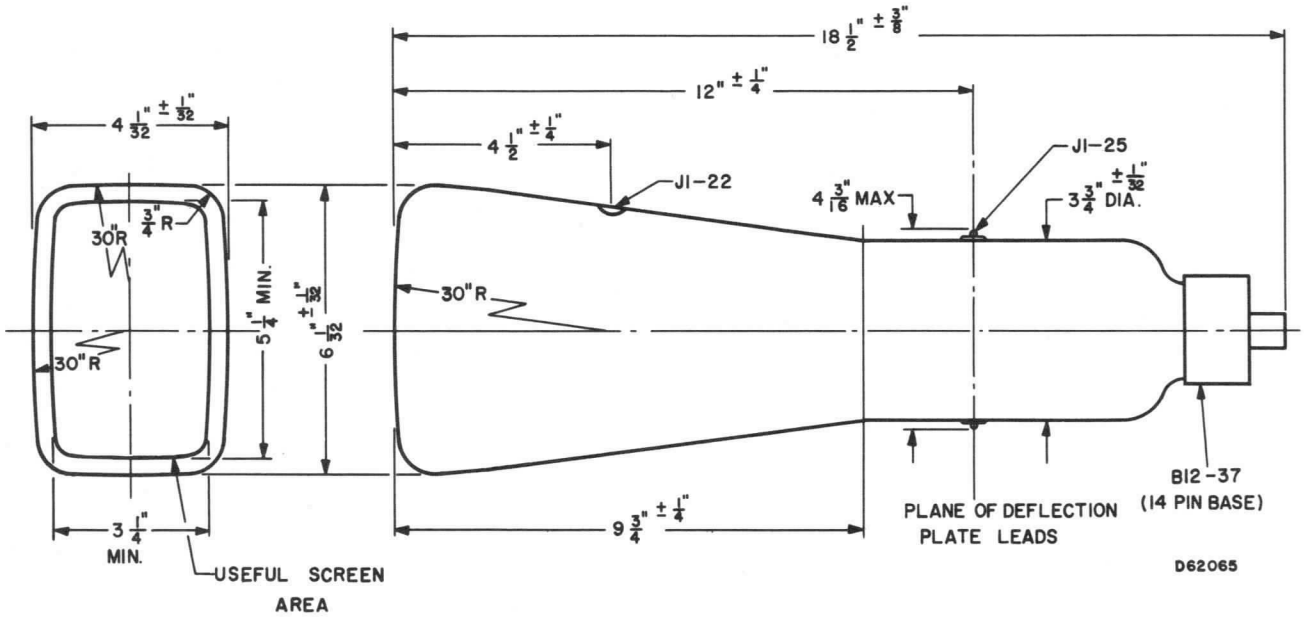

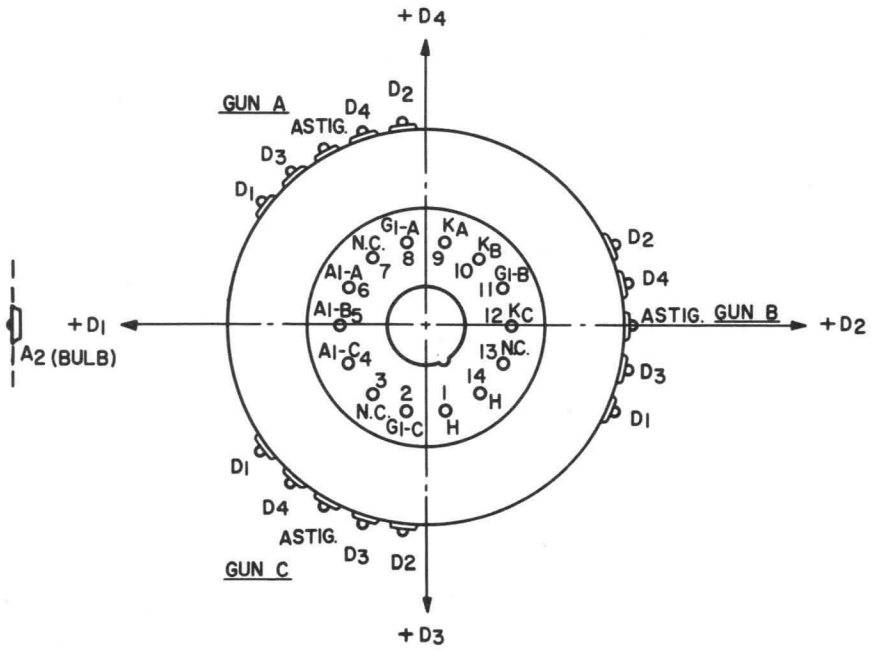

VIEW FROM BASE END OF TUBE

DESCRIPTION

The SC-3814 is an electrostatically focused and deflected cathode ray tube designed for zoned display applications. The tube features provision for six simultaneous independently controlled zoned traces, and uses a 10″ x 12″ rectangular glass bulb with large radius of curvature faceplate. Deflection plate leads are brought out through the neck wall to reduce inter-electrode capacitance and a monoaccelerator design is employed to provide maximum pattern linearity and deflection factor uniformity.

The tube is encapsulated in an integral mu metal shield for protection against stray magnetic and electric fields and breakdown at high altitudes. Color coded leads are brought out of the encapsulation to make connection to associated circuitry.

CHARACTERISTICS

GENERAL DATA

Heater Voltage	6.3 Volts
Heater Current	1.8 Amp
Overall Length (Approx.)	21 ½ Inches
Phosphor*	P7

*The SC-3814 can be supplied with several other screen phosphors.

TYPICAL OPERATING CONDITIONS

Anode Voltage	4000 Volts dc
E_{A1} for Focus	900-1300 Volts dc
Grid No. 1 Voltage for Cutoff	−70 to −120 Volts dc
Deflection Factors	
1D2	80-100 Volts dc Per Inch
3D4	38-52 Volts dc Per Inch
Useful Scan	
D1-D2 (Horizontal)	9 Inches
3D4 (Vertical)	2 ½ Inches
(Major axis of the bulb is vertical)	
Parallelism of all Horizontal Traces	0.55 ° Max.

QUICK REFERENCE DATA

Six Independent Guns
Zoned Displays
10 x 12 Inch Direct Viewed
Electrostatic Focus
Electrostatic Deflection
Monoaccelerator Design
Encapsulated in mu Metal Shield
Color Coded Leads are Brought Out Through the Encapsulation

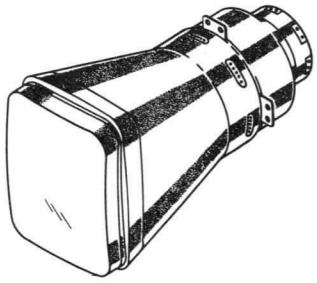

SYLVANIA ELECTRIC PRODUCTS INC.

Electronic Components Group
ELECTRONIC TUBE DIVISION
SENECA FALLS, NEW YORK

A Technical Publication

APRIL, 1964

File Under

SPECIAL AND GENERAL PURPOSE CATHODE RAY TUBES

OUTLINE

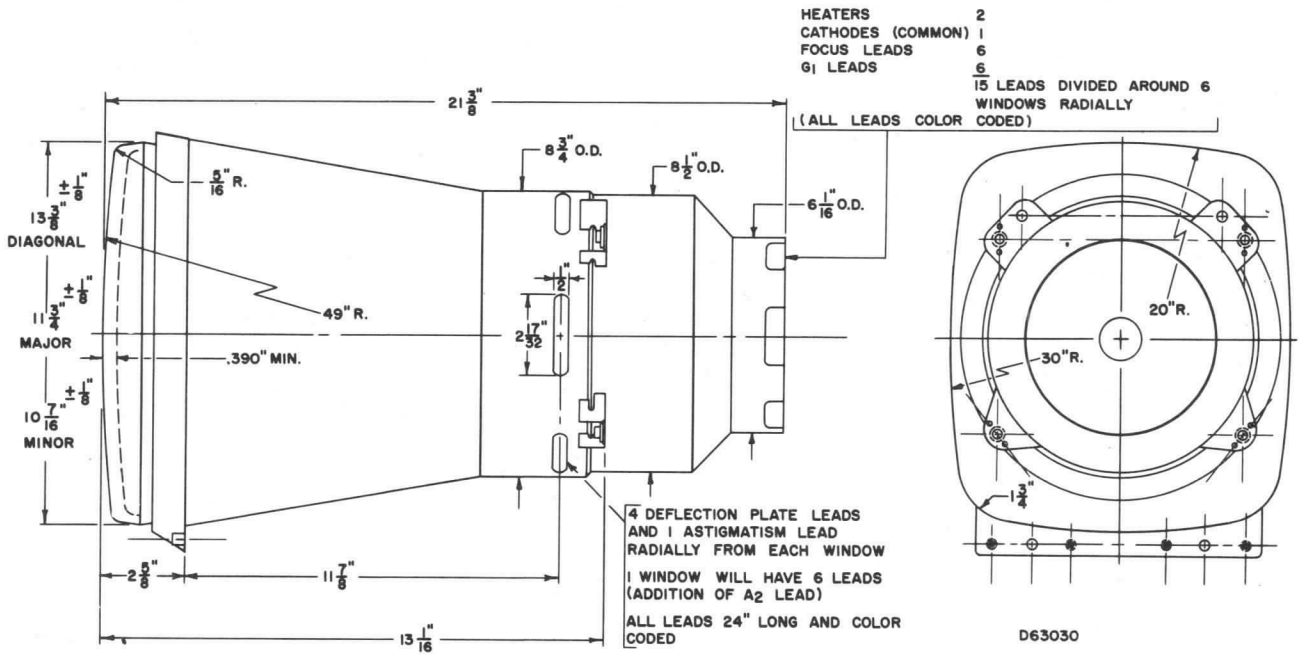
HEATERS 2
CATHODES (COMMON) 1
FOCUS LEADS 6
G1 LEADS 6
15 LEADS DIVIDED AROUND 6 WINDOWS RADIALLY
(ALL LEADS COLOR CODED)
21 3/8"
8 3/4" O.D.
8 1/2" O.D.
6 1/16" O.D.
5/16" R.
13 3/8" ± 1/8" DIAGONAL
11 3/4" ± 1/8" MAJOR
10 7/16" ± 1/8" MINOR
49" R.
.390" MIN.
1/2"
2 17/32"
4 DEFLECTION PLATE LEADS AND 1 ASTIGMATISM LEAD RADIALLY FROM EACH WINDOW
1 WINDOW WILL HAVE 6 LEADS (ADDITION OF A2 LEAD)
ALL LEADS 24" LONG AND COLOR CODED
2 5/8"
11 7/8"
13 1/16"
20"R.
30"R.
1 3/4"
D63030

DESCRIPTION

The Sylvania SC-3821 is a 7″ round rear window cathode ray tube intended for either simultaneously photographing the electron image or for optical projection of overlay information for comparator applications. It also features character writing deflection plates of high sensitivity for producing alpha-numeric symbols positioned with the main deflection yoke. The high resolution electron gun is designed for use with a single pole ion trap to eliminate ion blemishes. The optical viewing window has an approximate useful diameter of $1\frac{15}{16}$ inches and is of opthalmic quality.

CHARACTERISTICS

GENERAL DATA

Focusing Method	Electrostatic
Deflection Method	Magnetic
Phosphor*	P14
Fluorescence	Blue
Phosphorescence	Orange
Persistence	Medium

*In addition to the type shown, the SC-3821 can be supplied with several other screen phosphors.

ELECTRICAL DATA

Heater Voltage	6.3 ± 10 % Volts
Heater Current	540 to 660 Ma
Direct Interelectrode Capacitances (Approx.)	
K to all	5 pf
g1 to all	6 pf

MECHANICAL DATA

Overall Length (Approx.)	$17\frac{11}{16}$ Inches
Faceplate Diameter	7 Inches
Minimum Useful Screen Diameter	$6\frac{1}{8}$ Inches
Anode Terminal	J1-22

RATINGS

RATINGS (Absolute Maximum Values)

Anode Voltage	13,200 Volts dc
Focus Electrode Voltage	−550 to 1100 Volts dc
Grid No. 2 Voltage	770 Volts dc
Grid No. 1 Voltage	0 to −200 Volts dc

TYPICAL OPERATING CONDITIONS

Anode Voltage	10,000 Volts dc
Focus Electrode Voltage	0 to +300 Volts dc
Grid No. 2 Voltage	300 Volts dc
Grid No. 1 Voltage for Cutoff	−30 to −75 Volts dc
Line Width at Ib = 25 μa	0.010 Inch Max.

CIRCUIT VALUES

Grid No. 1 Circuit Resistance	1.5 Megohms Max.

QUICK REFERENCE DATA

Cathode Ray Tube
Rear Viewing Window
Electrostatic Focus
Magnetic Deflection
Ion Trap Design

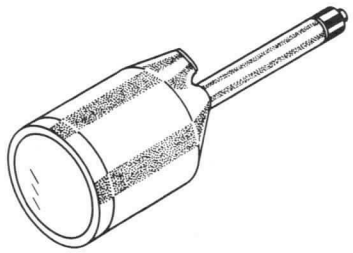

BASING

Pin 1 — Heater
Pin 2 — Grid No. 1
Pin 6 — Focus
Pin 10 — Grid No. 2
Pin 11 — Cathode
Pin 12 — Heater

SYLVANIA ELECTRIC PRODUCTS INC.

Electronic Components Group
ELECTRONIC TUBE DIVISION
SENECA FALLS, NEW YORK

A Technical Publication

JUNE, 1964

File Under
SPECIAL AND GENERAL PURPOSE CATHODE RAY TUBES

OUTLINE

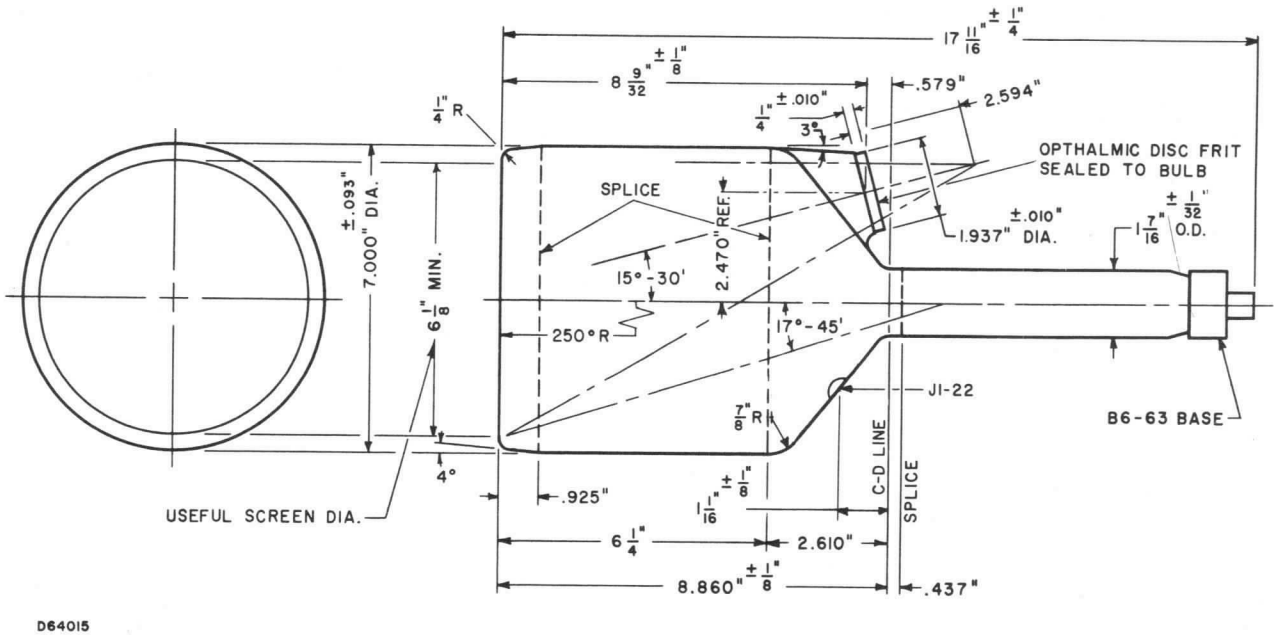

D64015

DESCRIPTION

Sylvania Type SC-3850 is a 5-inch diameter cathode ray tube designed for high resolution photographic recording using a fiber optics faceplate. An integral encapsulated high voltage connector is utilized to minimize corona at high altitude.

CHARACTERISTICS

GENERAL DATA

Focusing Method	Magnetic
Deflection Method	Magnetic
Deflection Angle (Approx.)	50 Degrees
Type*	SC-3850
Phosphor	Fine Grain P11
Fluorescence	Blue
Persistence	Short
Faceplate	Fiber Optic Insert See Dwg.

*In addition to the type shown, the SC-3850 can be supplied with several other screen phosphors.

ELECTRICAL DATA

Heater Voltage	6.3 Volts	
Heater Current	0.6 ± 10 % Ampere	
Direct Interelectrode Capacitances (Approx.)		
Grid No. 1 to All Other Electrodes	10 pf	
Cathode to All Other Electrodes	5.5 pf	
External Conductive Coating to Anode	500 pf	Max.
	100 pf	Min.

MECHANICAL DATA

Minimum Useful Screen Area	4 x ¼ Inches
Overall Length	16¾ Inches
Bulb	C40 Exp. 14 or Equivalent
Anode Terminal	16", HV Cable, Corona Protected
Base	Small Shell Duodecal 5-Pin B5-57
Basing	12N

MAXIMUM RATINGS (Absolute Maximum Values)

Anode Voltage	15,000 Volts	dc
Anode Current (Eg1 = 0 Volt)	3.0 μa	dc
Grid No. 2 Voltage	2500 Volts	dc
Grid No. 2 Current (Eg1 = 0 Volt)	2000 μa	dc
Grid No. 1 Voltage		
Negative Bias Value	150 Volts	dc
Positive Bias Value	0 Volt	dc
Positive Peak Value	0 Volt	
Peak Heater-Cathode Voltage		
Heater Negative with Respect to Cathode		
During Warm-up Period Not to Exceed 15 Seconds	450 Volts	
After Equipment Warm-up	165 Volts	
Heater Positive with Respect to Cathode	165 Volts	

TYPICAL OPERATING CONDITIONS

Anode Voltage	10,000 Volts	dc
Grid No. 2 Voltage	2000 Volts	dc
Grid No. 1 Voltage Required for Cutoff	−33 to −77 Volts	dc
Focusing Coil Current (Approx.)	100 Ma	
Line Width	0.0008 Inch	

CIRCUIT VALUES

Grid No. 1 Circuit Resistance	1.5 Megohms Max.

FIBER OPTICS SPECIFICATIONS

Size of Fiber Optics Insert	4½" x ½" x 3/16"
Fiber Size	5 Microns
Numerical Aperture	0.84

QUICK REFERENCE DATA

5" Fiber Optics Tube
Magnetic Focus
Magnetic Deflection
Integral H.V. Connector
For Very High Resolution Photographic Recording

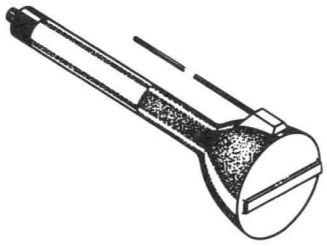

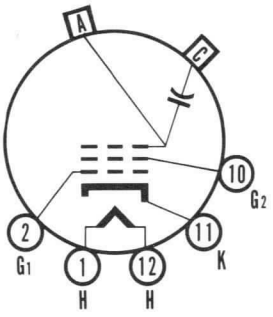

12-N

SYLVANIA ELECTRIC PRODUCTS INC.

Electronic Components Group
ELECTRONIC TUBE DIVISION
SENECA FALLS, NEW YORK

A Technical Publication

APRIL, 1964

File Under

SPECIAL AND GENERAL PURPOSE CATHODE RAY TUBES

OUTLINE

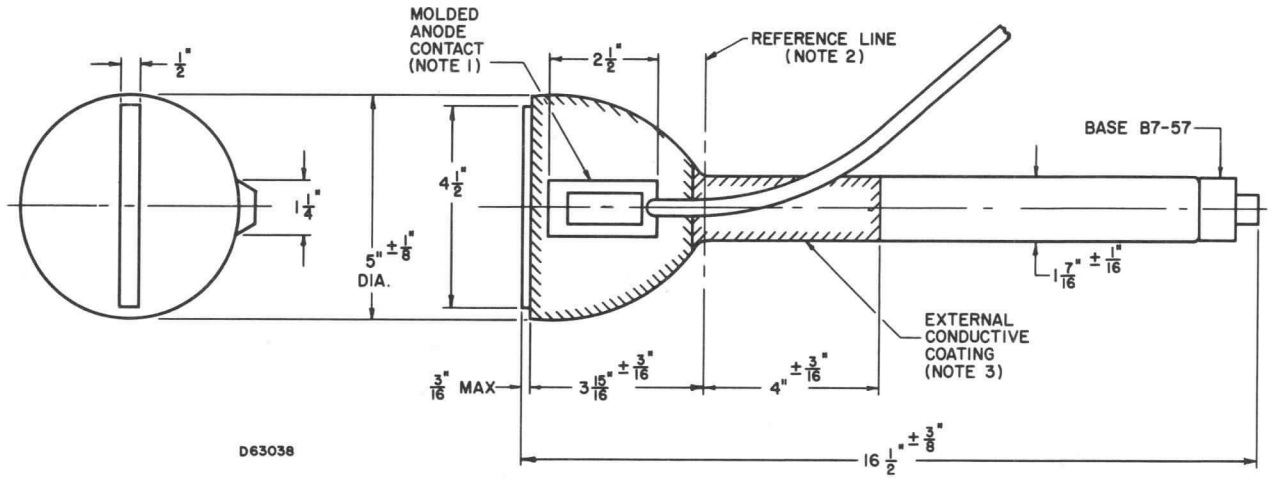

DIAGRAM NOTES:

1. *The plane through the tube axis and vacant pin position No. 3 may vary from the plane through the axis and centerline of molded anode contact by an angular tolerance (measured about the tube axis) of ±30°. Molded anode contact is on same side as vacant pin No. 3.*
2. *Reference line is determined by the plane C-C′ of reference line gauge (JEDEC No. G112), when gauge is seated on the glass cone.*
3. *External conductive coating must be grounded.*

DESCRIPTION

Sylvania Type SC-3863 is an electrostatic charge printing tube designed for use in high speed printing equipment. It is a cathode ray tube which has as a target for the beam, an array of fine, closely spaced, wires extending through the bulb wall. Deflection and modulation of the beam striking the wires will produce charge patterns on a dielectric in contact with the outer surface of the tube.

The fine focus beam of the SC-3863, the small wire size and close spacing in the array, and the low capacitance between wire elements, permit high resolution along with extremely rapid printing. The SC-3863 can be used for single line scanning, and the .160″ height of the array permits two-dimensional scanning for other types of operation. The useful printing width of the array is 2¾ inches.

CHARACTERISTICS

ELECTRICAL DATA

Focusing Method	Magnetic
Deflection Method	Magnetic
Horizontal Deflection Angle (Approx.)	24 Degrees
Heater Current at 6.3 Volts	600 ± 30 Ma
Direct Interelectrode Capacitances (Approx.)	
Cathode to All Other Electrodes	5 pf
Grid No. 1 to All Other Electrodes	8 pf

MECHANICAL DATA

Printing Head	
0.001″ Diameter Conductive Elements Spaced Approximately 0.004″ on Centers in Both Directions.	
Minimum Useful Printing Array Width	2.750 Inches
Minimum Useful Printing Array Height	0.160 Inches
Array Thickness (Approx.)	0.050 Inches
Overall Length	18 ± 3/8 Inches
Width	3 1/4 ± 1/32 Inches
Height	1 3/4 ± 1/32 Inches
Neck Length	13 5/8 ± 1/4 Inches
Neck Diameter	1 7/16 ± 1/16 Inches
Bulb Contact	C1-3
Base	B5-57
Basing	12D
Weight (Approx.)	1 Pound

MAXIMUM RATINGS (Absolute Maximum Values)

Unless Otherwise Specified, All Voltages are Positive with Respect to Cathode.

Maximum Anode Voltage	25,000 Volts	
Maximum Grid No. 2 Voltage	700 Volts	
Grid No. 1 Voltage		
Maximum Negative Value	155 Volts	dc
Maximum Negative Peak Value	200 Volts	
Maximum Positive Value	0 Volt	dc
Maximum Heater Voltage	6.9 Volts	
Minimum Heater Voltage	5.7 Volts	
Maximum Heater-Cathode Voltage		
Heater Negative with Respect to Cathode	200 Volts	
Heater Positive with Respect to Cathode	200 Volts	

QUICK REFERENCE DATA

Electrostatic Charge Printing Tube
Magnetic Deflection
Magnetic Focus
High Speed Printing
High Resolution
Printing Dimensions
.16″ x 2.75″ Minimum

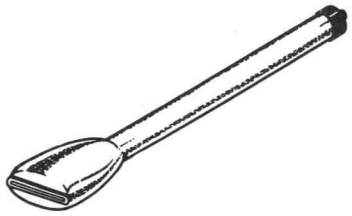

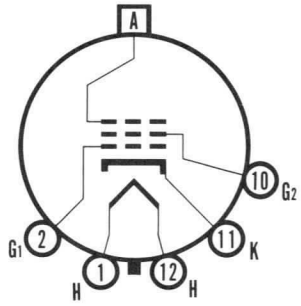

12-D

SYLVANIA ELECTRIC PRODUCTS INC.

Electronic Components Group
ELECTRONIC TUBE DIVISION
SENECA FALLS, NEW YORK

A Technical Publication

APRIL, 1964

File Under

SPECIAL AND GENERAL PURPOSE CATHODE RAY TUBES

TYPICAL OPERATING CONDITIONS (Grid Drive Service)

Unless Otherwise Specified, All Voltages are Positive with Respect to Cathode.

Anode Voltage	20,000 Volts	dc
Grid No. 2 Voltage	300 Volts	dc
Grid No. 1 Voltage for Cutoff	−40 to −77 Volts	dc
Focusing Coil Current[1]	70 ± 10 Ma	dc

NOTE:

1. *For JEDEC Focus Coil No. 122 or equivalent, with the combined Grid No. 1 bias voltage and video-signal voltage adjusted to produce 100 μa anode current. Distance from tube face to center of air gap on focus coil is 7⅜ inches.*

OUTLINE

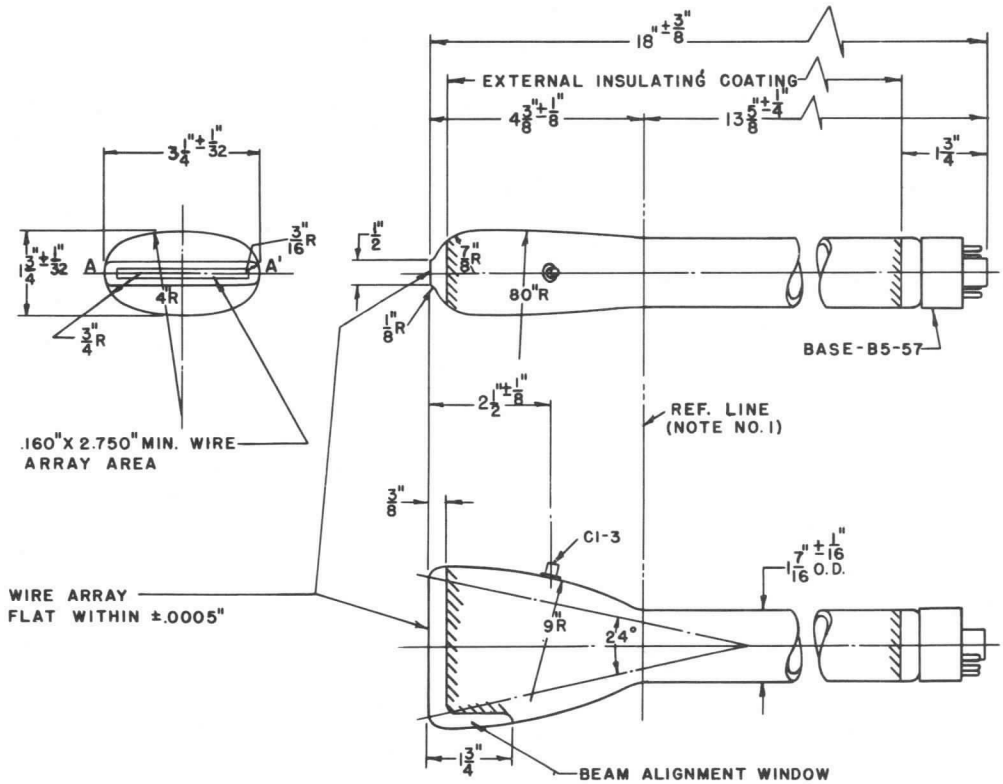

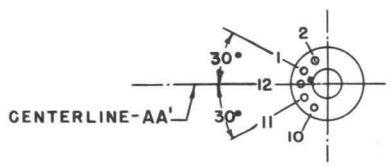

D61030A

BOTTOM VIEW OF BASE
(NOTE NO. 2)

DIAGRAM NOTES:

1. *Reference line determined by plane where JEDEC Gauge No. 112 (a cylinder 1.500" + .003" − .000" I.D. and 2" long) will stop against body of bulb.*
2. *Base Pin No. 12 aligns with horizontal centerline (A-A') within 30° and is on the side opposite the anode contact, (C1-3).*

DESCRIPTION

The Sylvania SC-3875 is a 19″ round rear window cathode ray tube intended for either simultaneously photographing the electron image or for optical projection of overlay information for comparator applications. It also features character writing deflection plates of high sensitivity for producing alpha-numeric symbols positioned with the main deflection yoke. The high resolution electron gun is designed for use with a single pole ion trap to eliminate ion blemishes. The optical viewing window has an approximate useful diameter of 2½ inches and is of opthalmic quality.

CHARACTERISTICS

GENERAL DATA

Focusing Method	Electrostatic
Character Writing	Electrostatic
Deflection Method	Magnetic
Deflection Angles (Approx.)	50 Degrees
Phosphor*	P14
Fluorescence	Blue
Phosphorescence	Yellow-Orange
Persistence	Medium to Long
Faceplate	Gray Filter Glass
Light Transmittance (Approx.)	75 Percent

*In addition to the type shown, the SC-3875 can be supplied with several other phosphors.

ELECTRICAL DATA

Heater Voltage	6.3 Volts
Heater Current	0.6 ± 10 % Ampere
Direct Interelectrode Capacitances (Approx.)	
Cathode to All Other Electrodes	5 pf
Grid No. 1 to All Other Electrodes	6.5 pf
D1 to D2	1.6 pf
D3 to D4	1.6 pf
Any One Plate to All	4.5 pf
Angle Between 1D2 and 3D4	90 + 1 Degrees

MECHANICAL DATA

Minimum Useful Screen Diameter	17 Inches
Bulb Contact (Recessed Small Cavity Cap)	J1-21
Neck Contacts (5)	0.040″ Diam. Wire
Base (Short Small Shell Duodecal 6-Pin)	B6-203
Basing	See Diagram

RATINGS

MAXIMUM RATINGS (Absolute Maximum Values)

Anode Voltage[1]	18,000 Volts
Grid No. 4 (Focusing Electrode) Voltage	−500 to +1100 Volts
Grid No. 2 Voltage	700 Volts
Grid No. 1 Voltage	
Negative Bias Value	180 Volts
Negative Peak Value	220 Volts
Positive Bias Value	0 Volt
Positive Peak Value	2 Volts
Peak Heater-Cathode Voltage	
Heater Negative with Respect to Cathode	
During Warm-up Period Not to Exceed 15 Seconds	450 Volts
After Equipment Warm-up Period	200 Volts
Heater Positive with Respect to Cathode	200 Volts
Peak Voltage Between Anode and Any Deflection Plate	550 Volts

QUICK REFERENCE DATA

19″ Cathode Ray Tube
Rear Viewing Window
Electrostatic Focus
Magnetic Deflection
Electrostatic Character Writing
Single Ion Trap

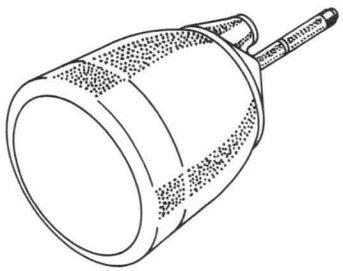

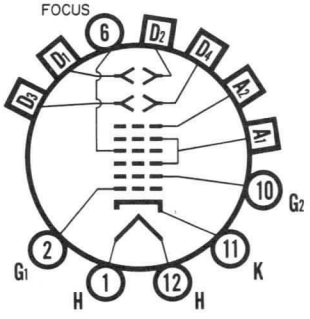

SC-3875

SYLVANIA ELECTRIC PRODUCTS INC.

Electronic Components Group
ELECTRONIC TUBE DIVISION
SENECA FALLS, NEW YORK

A Technical Publication

JULY, 1965

File Under

SPECIAL AND GENERAL PURPOSE CATHODE RAY TUBES

TYPICAL OPERATING CONDITIONS (Grid Drive Service)

Anode Voltage[1]	15,000 Volts	dc
Grid No. 4 Voltage for Focus	0 to +400 Volts	dc
Grid No. 2 Voltage	500 Volts	dc
Grid No. 1 Voltage Required for Cutoff[2]	−35 to −72 Volts	dc
Deflection Factors (Approx.)[3]		
D1-D2	170 Volts	dc/In.
D3-D4	185 Volts	dc/In.
Line Width at 20 FTL	0.025 In.	Max.
Spot Position	Within 30 mm Diam. Circle	

CIRCUIT VALUES

Grid No. 1 Circuit Resistance	1.5 Megohms Max.
Deflection Circuit Resistance	5 Megohms Max.

NOTES:

1. *Connect both bulb and neck anode contacts to anode supply.*
2. *Visual extinction of focused raster. Extinction of the stationary spot will require that these values be about 5 volts more negative.*
3. *Useful electrostatic deflection is limited to ±1" on each axis.*
4. *20 FTL measured in 10" x 10" raster scanned with T.V. standards.*

WARNING:

X-ray radiation shielding may be necessary to protect against possible danger of personal injury from prolonged exposure at close range if this tube is operated at higher than the manufacturer's Maximum Rated Anode Voltage or 16,000 volts, whichever is less.

OUTLINE

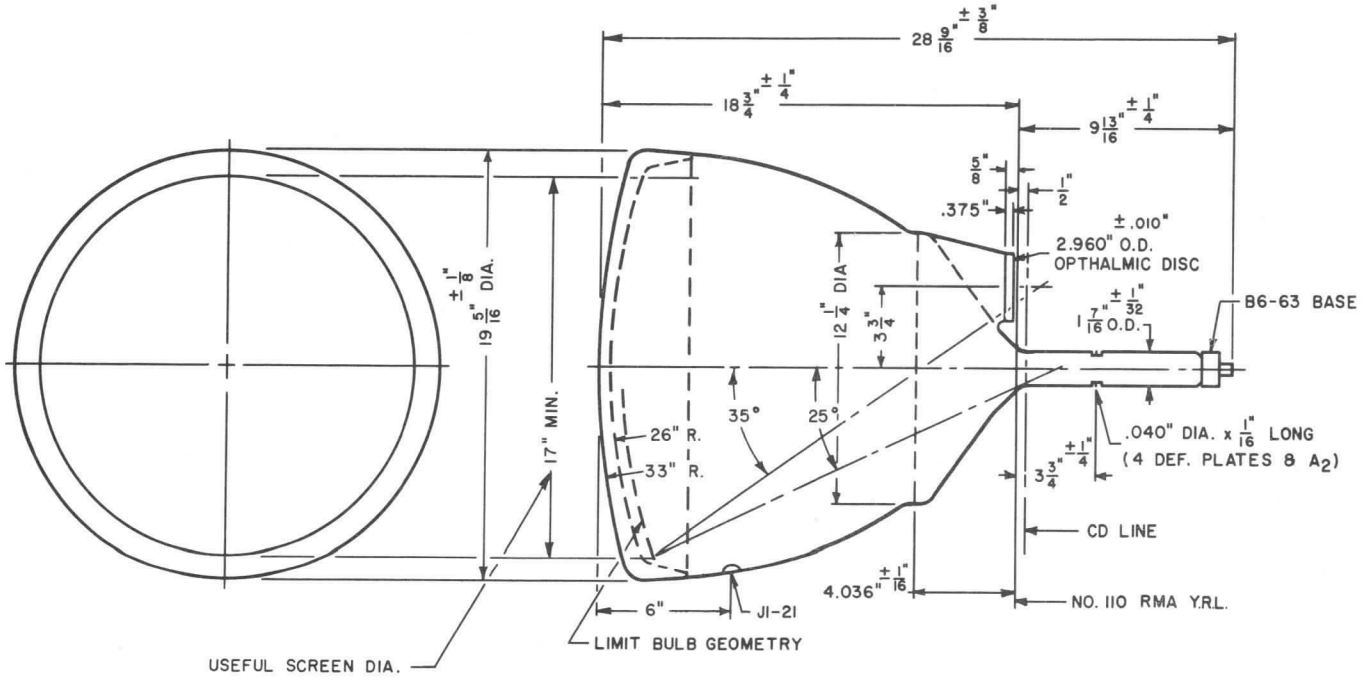

D64020

DESCRIPTION

The Sylvania Type SC-3890 is a 10-inch diameter Cathode Ray Tube designed for high resolution photographic recording. Its electron-optical system and fine grain screen achieve very fine trace width with conventional focusing and deflection units and a simple beam-centering magnet. The tube has a flat, clear, non-browning optical glass faceplate for optimum photographic quality.

CHARACTERISTICS

GENERAL DATA

Focusing Method	Magnetic
Deflection Method	Magnetic
Deflection Angle (Approx.)	50 Degrees
Phosphor	P11
Fluorescence	Blue
Phosphorescence	Blue
Persistence	Short
Faceplate	Flat, Non Browning Optical Glass

ELECTRICAL DATA

Heater Voltage	6.3 Volts
Heater Current	0.6 ± 10 % Ampere
Direct Interelectrode Capacitance (Approx.)	
Cathode to All Other Electrodes	5 pf
Grid No. 1 to All Other Electrodes	6 pf

MECHANICAL DATA

Minimum Useful Screen Diameter	9 Inches
Bulb Contact (Recessed Small Cavity Cap)	J1-21
Base (Small Shell Duodecal 6-Pin)	B5-57
Basing	12N
Bulb Contact Aligns with Vacant Pin Position No. 3	±10 Degrees

RATINGS

MAXIMUM RATINGS (Absolute Maximum Values)

Anode Voltage	25,000 Volts dc
Grid No. 2 Voltage	2500 Volts dc
Grid No. 1 Voltage	
Negative Bias Value	150 Volts dc
Positive Bias Value[1]	0 Volt
Positive Peak Value	0 Volt
Peak Heater-Cathode Voltage	
Heater Negative with Respect to Cathode	200 Volts dc
Heater Positive with Respect to Cathode	200 Volts dc

TYPICAL OPERATING CONDITIONS

Anode Voltage	20,000 Volts dc
Grid No. 2 Voltage	2000 Volts dc
Grid No. 1 Voltage for Cutoff[2]	−33 to −77 Volts dc
Line Width at Ib = 5 μa	0.002 Inch

CIRCUIT VALUES

Grid No. 1 Circuit Resistance	1.5 Megohms Max.

NOTES:

1. *At or near this rating, the effective resistance of the anode supply should be adequate to limit the anode input power to 6 watts. To prevent burning, minimum beam current densities should be employed.*
2. *Visual extinction of undeflected focused spot.*

QUICK REFERENCE DATA

High Resolution Tube
0.002″ Line Width
10-Inch, Flat, Optical Glass Faceplate
Clear Non-Browning Faceplate
Extremely Fine Grain Screen
Magnetic Deflection
Magnetic Focus
No Ion Trap

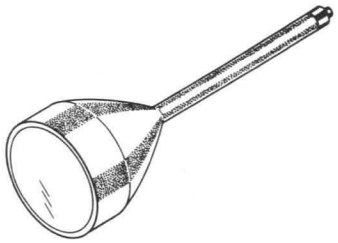

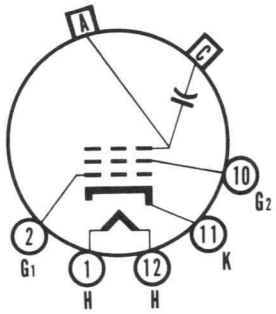

12-N

SYLVANIA ELECTRIC PRODUCTS INC.

Electronic Components Group
ELECTRONIC TUBE DIVISION
SENECA FALLS, NEW YORK

A Technical Publication

JUNE, 1964

File Under
SPECIAL AND GENERAL PURPOSE CATHODE RAY TUBES

WARNING:

X-ray radiation shielding may be necessary to protect against possible danger of personal injury from prolonged exposure at close range if this tube is operated at higher than the manufacturer's Maximum Rated Anode Voltage or 16,000 volts, whichever is less.

OUTLINE

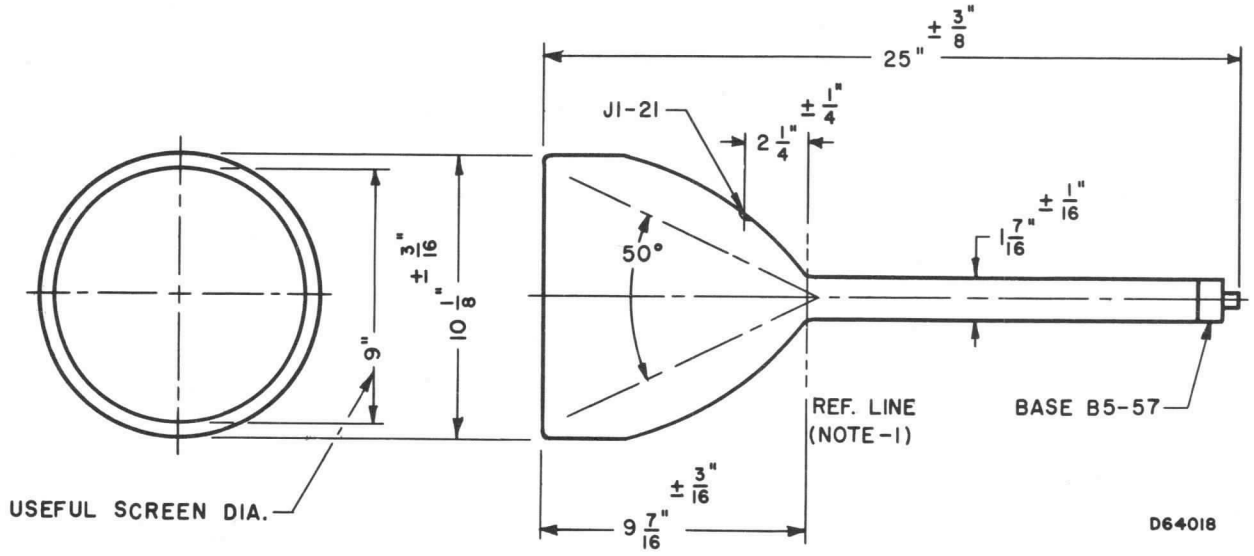

DIAGRAM NOTE:

1. *Reference Line is the point where a 1.500" + 0.003" – 0.000" diameter ring gauge 2" long will stop against the bulb.*

ADVANCE DATA

DESCRIPTION

The Sylvania SC-3892P1 is a 5 gun, electrostatically focused and deflected cathode-ray tube, 16 inches in diameter, for displaying simultaneously, 5 independently controlled traces. It features monoaccelerator design for maximum pattern linearity and deflection factor uniformity. The tube is potted in a mu-metal shield with all tube connections being color coded flying leads.

CHARACTERISTICS

GENERAL DATA

Focusing Method	Electrostatic
Deflection Method	Electrostatic

In addition to P1, the SC-3892 can be supplied with several other screen phosphors.

ELECTRICAL DATA

Heater Voltage	6.3 Volts
Heater Current (600 ma per Gun)	3.0 ± 10 % Amperes
Direct Interelectrode Capacitances (Approx.)	Each Gun
Cathode to All	To Be Determined
Grid No. 1 to All	To Be Determined
D1 to D2	To Be Determined
D3 to D4	To Be Determined
D1 to All Other Electrodes	To Be Determined
D2 to All Other Electrodes	To Be Determined
D3 to All Other Electrodes	To Be Determined
D4 to All Other Electrodes	To Be Determined

MECHANICAL DATA

Overall Length	26½ ± ⅜ Inches
Minimum Useful Screen Diameter	15 Inches
Basing	Color Coded Leads
Trace Alignment	
D1-D2 Trace Aligns with D3-D4 Trace (Each Gun)	90 ± 1 Degree
D1-D2 Traces of All Guns are Parallel	±1 Degree

MAXIMUM RATINGS (Absolute Maximum Values)

Anode No. 2 Voltage	5500 Volts
Astigmatism Electrode Voltage	5500 Volts
Focus Electrode Voltage	3000 Volts
Grid No. 1 Voltage	
Negative Bias Value	220 Volts
Positive Bias Value	0 Volt
Positive Peak Value	2 Volts
Peak Heater to Cathode Voltage	
Heater Negative with Respect to Cathode	200 Volts
Heater Positive with Respect to Cathode	200 Volts
Peak Voltage Between Anode and Astigmatism Electrode or Any Deflecting Plate	1500 Volts

QUICK REFERENCE DATA

5 Gun Design
Electrostatic Focus
Electrostatic Deflection
16″ Diameter
Monoaccelerator Design
Potted in Mu-Metal
Color Coded Leads

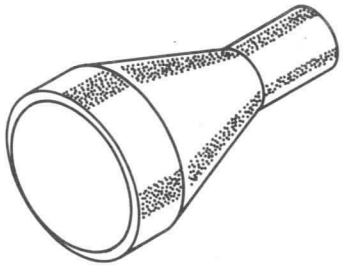

For Basing
Diagram See
Page 3

SYLVANIA ELECTRIC PRODUCTS INC.

Electronic Components Group
ELECTRONIC TUBE DIVISION
SENECA FALLS, NEW YORK

A Technical Publication
SEPTEMBER, 1964

File Under

SPECIAL AND GENERAL
PURPOSE CATHODE RAY TUBES

TYPICAL OPERATING CONDITIONS

Anode No. 2 Voltage	3000 Volts	dc
Astigmatism Electrode Voltage	2900-3100 Volts	dc
Focus Electrode Voltage	850 to −1500 Volts	dc
Grid No. 1 Voltage[2]	−50 to −100 Volts	dc
Line Width "A"[3]	0.035 Inches	Max.
Deflection Factors		
D1-D2	80 V/in.	Max.
D3-D4	80 V/in.	Max.
Deflection Factor Uniformity[4]	1½ Percent	Max.
Undeflected Spot Position (All Guns)	Within 1 Inch Square at Geometric Center of Face	
Useful Scan		
D1-D2	±7½ Inches	
D3-D4	±7½ Inches	
Interaction Factor[5]	6×10^{-5} In./Volts	Max.

CIRCUIT VALUES

Grid No. 1 Circuit Resistance	1.5 Megohms	Max.
Deflection Circuit Resistance	1.0 Megohm	Max.

NOTES:

1. *Values are for each gun unless otherwise specified.*
2. *Visual extinction of undeflected focused spot.*
3. *Per MIL-E-1 and at a control grid voltage of 25 volts above spot cutoff.*
4. *The deflection factor (for both D1-D2 and D3-D4 plate pairs separately) for a deflection of 75 % of the minimum useful scan will not differ from the deflection factor at 25 % of the minimum useful scan by more than the indicated value.*
5. *The deflection on one beam when balanced dc voltages are applied to the deflection electrodes of either of the other two guns shall be less than the specified value.*

OUTLINE

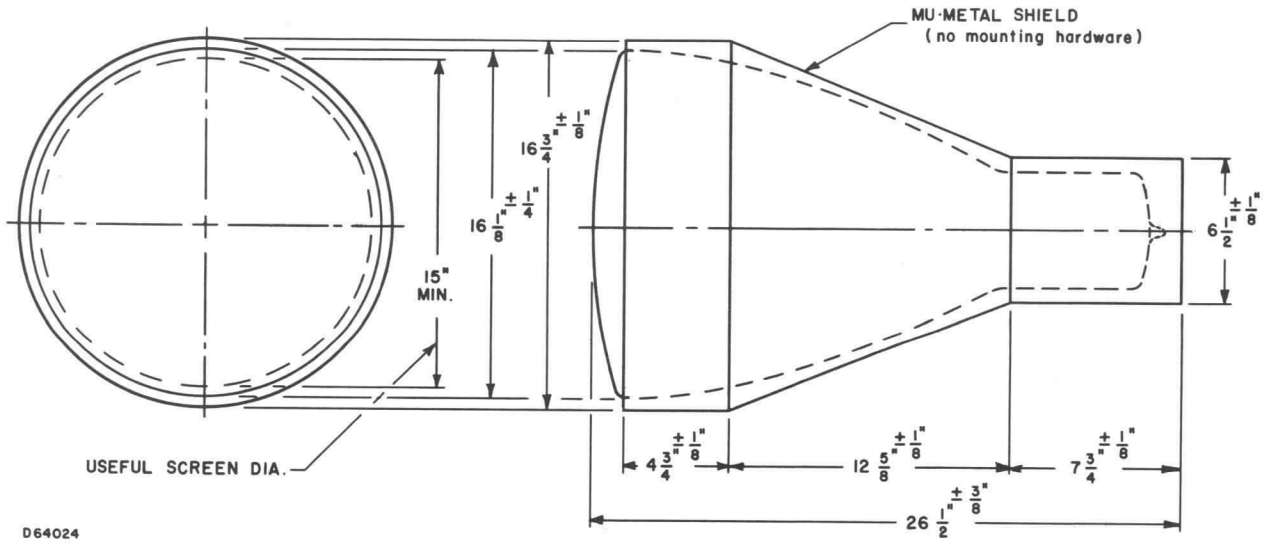

BASING DIAGRAM

Color Coded Base Wires
(MIN. LENGTH 18 INCHES)

BROWN____H1
BROWN____H2
GREEN____GRID 1
WHITE___CATHODE
YELLOW___FOCUS
ORANGE___ASTIGMATISM
BLUE_____D1
GRAY_____D2
VIOLET____D3
BLACK____D4
RED_____ANODE

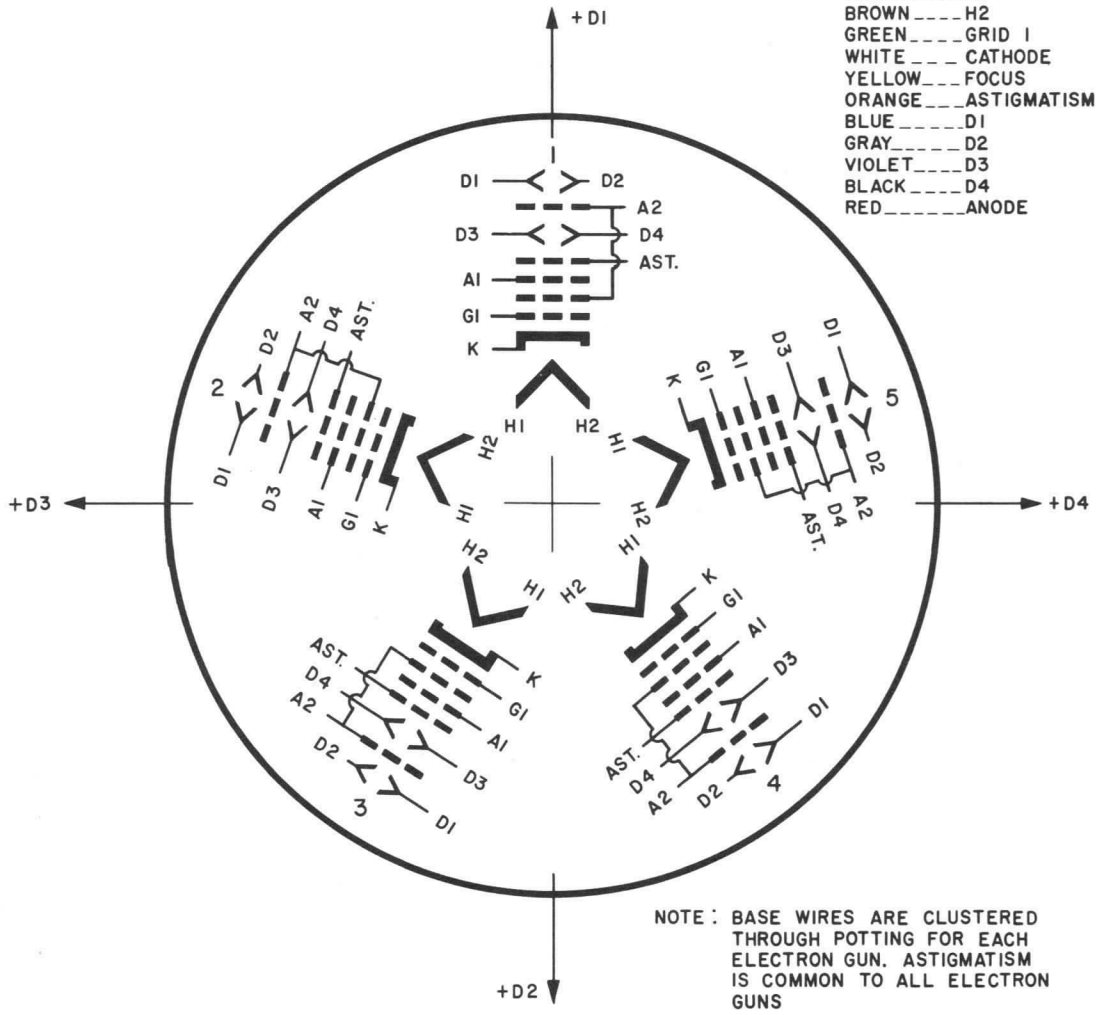

NOTE: BASE WIRES ARE CLUSTERED THROUGH POTTING FOR EACH ELECTRON GUN. ASTIGMATISM IS COMMON TO ALL ELECTRON GUNS

D64028

VIEW FROM BASE END OF TUBE

TENTATIVE DATA

DESCRIPTION

The Sylvania SC3895 is a 19" round, console display tube for large screen visual readout of alphanumeric and vector information. It employs advanced designs for high resolution and brightness at very high writing rates. The SC3895 features an aluminized screen, post deflection acceleration, and deflection plate leads brought out through the neck for low deflection inductance and capacitance.

GENERAL DATA

Focusing Method	Electrostatic	
Deflecting Method	Electrostatic	
Phosphor* Spectral Energy Distribution of	P28	
Fluorescence	Yellow-Green	
Phosphorescence	Yellow-Green	
Persistence	Long	
Faceplate	Gray Filter Glass	
Transmittance (Approx.)	76	Percent

* In addition to the screen shown, the SC3895 can be supplied with several other screen phosphors.

ELECTRICAL DATA

Heater Voltage	6.3	Volts
Heater Current	0.6 ± 10%	Amperes
Direct Interelectrode Capacitances (Approx.)		
Cathode to All Other Electrodes	7.5	pf
Grid No. 1 to All Other Electrodes	14.0	pf
Between Deflecting Plates 1-2	6.4	pf
Between Deflecting Plates 3-4	2.5	pf
Deflecting Plate 1 to All Other Electrodes	13.7	pf
Deflecting Plate 2 to All Other Electrodes	13.7	pf
Deflecting Plate 3 to All Other Electrodes	5.7	pf
Deflecting Plate 4 to All Other Electrodes	5.7	pf
Grid No. 2 to All Other Electrodes	13.5	pf

MECHANICAL DATA

Minimum Useful Screen Diameter	18	Inches
Bulb Contact (Recessed Small Cavity Cap)	J1-21	
Neck Contacts (Small Ball)	J1-25	
Base (Medium Shell Diheptal 14-Pin	B12-37	

These are tentative data only. Sylvania, by the publication thereof, is under no obligation as to future manufacture of the product herein described nor as to adherence to these data in case of such future manufacture.

QUICK REFERENCE DATA

Character Writing Tube
19" Direct Viewed
Round Glass Type
Electrostatic Deflection
Electrostatic Focus
Post Deflection Acceleration
Aluminized Screen

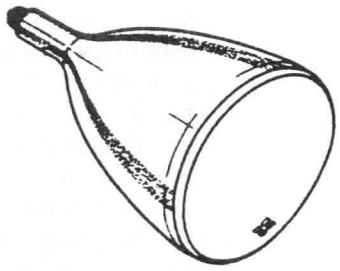

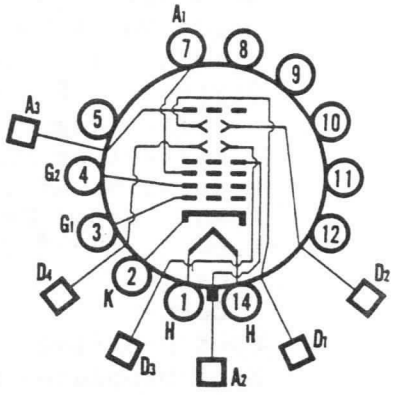

SYLVANIA ELECTRIC PRODUCTS INC.

Electronic Components Group
ELECTRONIC TUBE DIVISION
SENECA FALLS, NEW YORK

A Technical Publication

April 29, 1965

MECHANICAL DATA (Continued)

J1-21 Contact and Base Key Aligns with Trace D1-D2	±10	Degrees
D3-D4 Trace Aligns with Pin No. 11	±10	Degrees
Angle Between D1-D2 and D3-D4 Traces	90 ± 1	Degrees

RATINGS

MAXIMUM RATINGS (Absolute Maximum Ratings)

Anode Input	6	Watts
Anode No. 3 (Post Accelerator) Voltage	19,800	Volts dc
Anode No. 2 Voltage[1]	11,000	Volts dc
Anode No. 1 (Focusing Electrode) Voltage	8,000	Volts dc
Grid No. 1 Voltage		
Negative Bias Value	200	Volts dc
Positive Bias Value	0	Volt dc
Positive Peak Value	0	Volt
Grid No. 2 Voltage	800	Volts dc
Peak Heater-Cathode Voltage		
Heater Negative with Respect to Cathode	180	Volts
Heater Positive with Respect to Cathode	180	Volts
Peak Voltage Between Anode No. 2 and Any Deflecting Plate	1500	Volts
Ratio Post Accelerator Voltage to Anode Voltage	2:1	

TYPICAL OPERATING CONDITIONS

Anode No. 3 (Post Accelerator) Voltage	18,000	Volts dc	
Anode No. 2 Voltage	10,000	Volts dc	
Grid No. 2 Voltage	500	Volts dc	
Anode No. 1 Voltage for Focus	4800 to 5200	Volts dc	
Grid No. 1 Voltage Required for Cutoff	-50 to -150	Volts dc	
Deflection Factors			
Deflecting Plates 1-2	90 to 140	Volts dc/Inch	
Deflecting Plates 3-4	90 to 140	Volts dc/Inch	
Modulation at 17.7 FTL[2]	50	Volts	Max.
Light Output Center[2]	17.7	FTL	Min.
Line Width[3-4]			
Center	0.025	Inch	
Corners	0.040	Inch	
Spot Position	1.5	Inch	
Spot Displacement	0.4	Inch	
Focus Correction[3-4]	0 to 1000	Volts	Max.
Astigmatism Correction[3-4]	0 to 350	Volts	Max.

CIRCUIT VALUES

Grid No. 1 Circuit Resistance	1.5	Megohms	Max.
Resistance in Any Deflection Plate Circuit[1]	1.0	Megohms	Max.

NOTES:

1. The deflection electrode circuit resistances shall be less than 30,000 ohms.

2. Using a Spectra Spot Brightness Meter or equivalent and writing at 850,000 inch/sec. with a repetition rate of 60 cycles. Minimum light output will be as specified.

3. Line width within a 4-inch circle will be considered as center, the remaining area within a centered 12.6 inch square will be considered Line Width at corners. Line Width measurements will be taken per Note 2 using 5 FTL as the light output level.

4. Line Width test made with dynamic focus ad astigmatism. Both focus and astigmatism may change from the center value to some value within the values specified.

X-RAY WARNING:

X-ray radiation shielding may be necessary to protect against possible danger of personal injury from prolonged exposure at close range if this tube is operated at higher than the manufacturer's maximum anode voltage or 16,000 volts, whichever is less.

OUTLINE

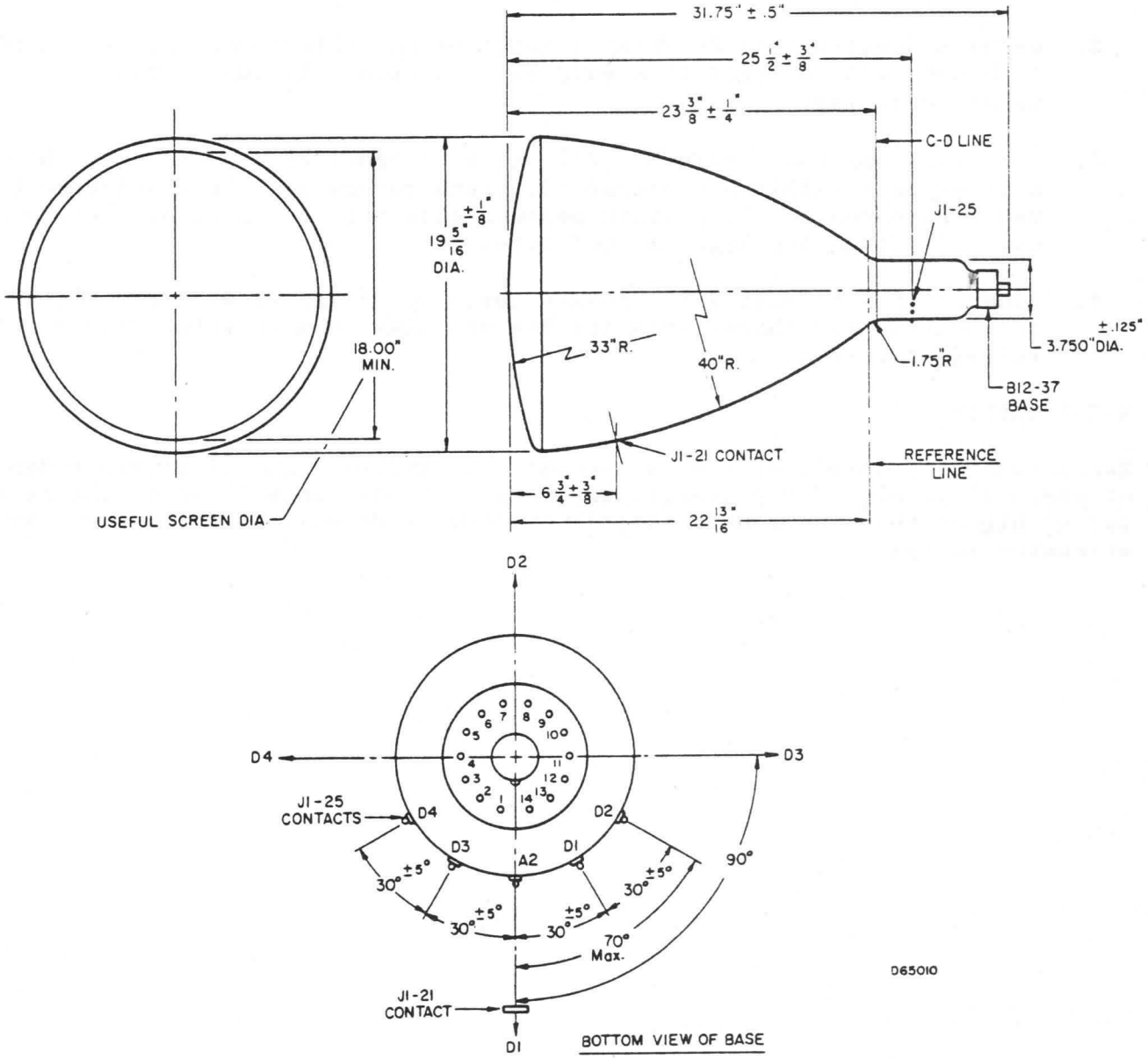
31.75" ± .5"
25 1/2" ± 3/8"
23 3/8" ± 1/4"
C-D LINE
J1-25
19 5/16" ± 1/8" DIA.
18.00" MIN.
33" R.
40" R.
1.75" R
± .125"
3.750" DIA.
B12-37 BASE
J1-21 CONTACT
REFERENCE LINE
6 3/4" ± 3/8"
22 13/16"
USEFUL SCREEN DIA
D2
D4
D3
J1-25 CONTACTS
D1
A2
30° ± 5°
90°
70° Max.
J1-21 CONTACT
BOTTOM VIEW OF BASE
D65010

DESCRIPTION

Sylvania Type SC-4009 is an electrostatically focused and deflected cathode ray tube designed for modern oscilloscopes which feature a rectangular shape display. Its electron gun offers high deflection and pattern linearity.

CHARACTERISTICS

GENERAL DATA

Focusing Method	Electrostatic
Deflection Method	Electrostatic
Phosphor*	P31
Fluorescence	Green
Phosphorescence	Green
Persistence	Medium
Faceplate	Clear

*In addition to the phosphor shown the SC-4009 can be supplied with several other screen phosphors.

ELECTRICAL DATA

Heater Voltage	6.3 Volts	
Heater Current	0.6 ± 10 % Ampere	
Direct Interelectrode Capacitances		
Cathode to All Other Electrodes	5.0 pf	Max.
Grid No. 1 to All Other Electrodes	6.9 pf	Max.
Between Deflecting Plates 1-2	4.5 pf	Max.
Between Deflecting Plates 3-4	1.6 pf	Max.
Deflecting Plate 1[1] to All Other Electrodes	9.3 pf	Max.
Deflecting Plate 2[1] to All Other Electrodes	9.3 pf	Max.
Deflecting Plate 3[1] to All Other Electrodes	6.3 pf	Max.
Deflecting Plate 4[1] to All Other Electrodes	6.3 pf	Max.

MECHANICAL DATA

Minimum Useful Screen Dimension	4 x 5 Inches
Base	B12-37, Medium Shell Diheptal 12-Pin
Basing	14G
Base Alignment	
D1-D2 Trace Aligns with Pin No. 5 and Major Tube Axis[4]	±10 Degrees
Angle Between D1-D2 and D3-D4 Traces	90 ± 0.8 Degrees
Angle Between D1-D2 Trace and Bulb Wall	±1.5 Degrees

RATINGS

MAXIMUM RATINGS (Absolute Maximum Values)

Maximum Anode No. 2 Voltage[2]	4400 Volts dc
Anode No. 1 Voltage	1650 Volts dc
Grid No. 1 Voltage	
Negative Bias Value	220 Volts dc
Positive Bias Value	0 Volt dc
Positive Peak Value	2 Volts
Peak Heater-Cathode Voltage	
Heater Negative with Respect to Cathode	200 Volts
Heater Positive with Respect to Cathode	200 Volts
Peak Voltage Between Anode No. 2 and any Deflecting Plate	1200 Volts

QUICK REFERENCE DATA

4½ x 5½ Face
Direct Viewed
Electrostatic Deflection
Oscilloscope Tube
Electrostatic Focus
Clear Faceplate

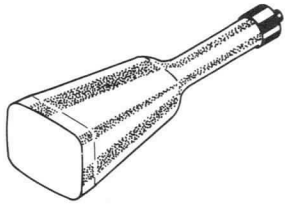

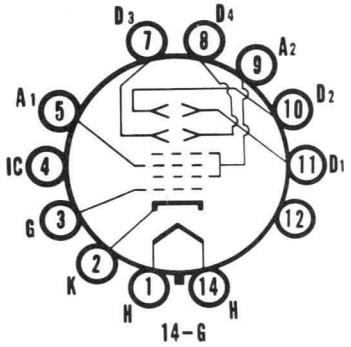

SYLVANIA ELECTRIC PRODUCTS INC.

Electronic Components Group
ELECTRONIC TUBE DIVISION
SENECA FALLS, NEW YORK

A Technical Publication

JULY, 1965

File Under

SPECIAL AND GENERAL PURPOSE CATHODE RAY TUBES

TYPICAL OPERATING CONDITIONS

Anode No. 2 Voltage	2500 Volts dc	
Anode No. 1 Voltage for Focus	0 to 300 Volts dc	
Grid No. 1 Voltage Required for Cutoff[3]	−34 to −56 Volts dc	
Deflection Factor[4]		
Deflecting Plates 1-2	40 to 50 Volts dc/In.	
Deflecting Plates 3-4	31.5 to 38.5 Volts dc/In.	
P1 Light Output[5]	15 Ft. L.	Min.
Modulation[5]	40 Volts dc	Max.
Line Width A[5]	0.030 Inch	Max.
Anode No. 2 Current[5]	400 μa dc	Max.
Deflection Factor Uniformity[6]	1 Percent	Max.
Pattern Distortion at 100 % of Useful Scan[7]	1 Percent	Max.
Spot Position[8]	Within a 5/16 Inch Radius Circle	
Useful Scan (Centered on Tube Face)	3 7/8 x 4 1/2 Inches	Min.

CIRCUIT VALUES

Grid No. 1 Circuit Resistance	1.5 Megohms	Max.
Deflection Circuit Resistance[9]	1.0 Megohms	Max.

NOTES:

1. *Deflecting Plate 1 is Pin No. 11.*
   Deflecting Plate 2 is Pin No. 10.
   Deflecting Plate 3 is Pin No. 7.
   Deflecting Plate 4 is Pin No. 8.
2. *The product of Anode No. 2 voltage and average Anode No. 2 current should be limited to 6.0 watts.*
3. *Visual extinction of undeflected focused spot.*
4. *Positive voltage on D1 deflects beam approximately toward Pin No. 5.*
   Positive voltage on D3 deflects beam approximately toward Pin No. 2.
5. *Measured in accordance with MIL-E-1 specification on a P31 screen at a brightness of 15 Ft. L. on a raster size of 2 x 2 inches.*
6. *The deflection factors at 75 % of useful scan and at 25 % of useful scan shall not differ by more than the indicated value.*
7. *All edges of a raster pattern adjusted so its widest points just touch the sides of a 3.075 inch square, will fall within the area bounded by the 3.075 inch square and an inscribed 2.925 inch square.*
8. *Centered on the tube face with the tube shielded and with all deflection plates connected to Anode No. 2.*
9. *It is recommended that the deflecting electrode circuit resistances be approximately equal.*

OUTLINE

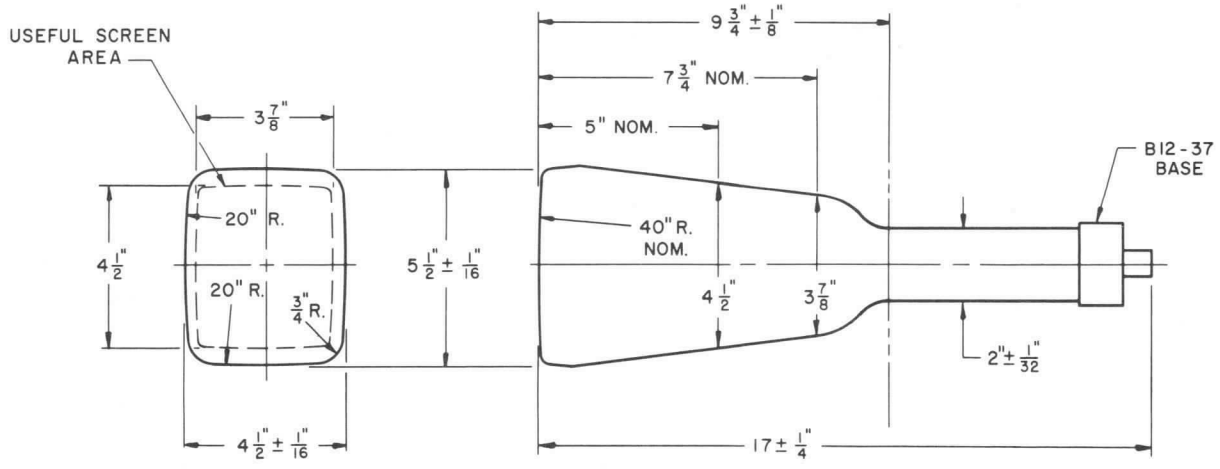

D65017

ADVANCE DATA

DESCRIPTION

The SC-4014 is a 7″ flat face, 2 gun cathode ray tube with electrostatic deflection and focus. It features linear post deflection acceleration for maximum pattern linearity and deflection factor uniformity. It is intended for applications where line widths less than 0.020 inches are required. The SC-4014 can be supplied with a variety of phosphors. The screen is aluminized for high brightness. This tube is potted in its mu-metal shield and is provided with color coded leads for all connections.

CHARACTERISTICS

GENERAL DATA

Focusing Method	Electrostatic
Deflection Method	Electrostatic
Faceplate	Clear

ELECTRICAL DATA

Heater Voltage	6.3 Volts
Heater Current (2 Guns in Parallel)	0.60 ± 10 % Ampere

MECHANICAL DATA

Overall Tube Length	20 7/8 ± 1/4 Inches
Minimum Useful Screen Diameter	6 1/8 Inches
Basing	Color Coded Leads
Angle Between D1-D2 and D3-D4 Traces of Each Gun	90 ± 1 Degree
Angle Between D1-D2 and D3-D4 Traces of the 2 Guns are Parallel	±1 Degree

MAXIMUM RATINGS (Absolute Maximum Values)

Anode No. 3 Voltage	15,000 Volts	dc
Anode No. 2 Voltage	4500 Volts	dc
Anode No. 1 (Focus Electrode) Voltage	1550 Volts	dc
Grid No. 1 Voltage		
Negative Bias Value	220 Volts	dc
Positive Bias Value	0 Volt	dc
Positive Peak Value	2 Volts	
Peak Voltage Anode No. 2 to Any Deflecting Plate	±550 Volts	
Peak Heater-Cathode Voltage		
Heater Negative with Respect to Cathode	200 Volts	
Heater Positive with Respect to Cathode	200 Volts	
Modulation (Anode 3 Current = 25 μa)	36 Volts	Max.

TYPICAL OPERATING CONDITIONS

Anode No. 3 Voltage	12,400 Volts	dc
Anode No. 2 Voltage	2900 Volts	dc
Grid No. 1 Voltage (For Spot Cutoff)	−35 to −65 Volts	dc
Anode No. 1 Voltage (For Focus)[1]	750-1050 Volts	dc
Deflection Factors		
D1-D2	116 to 134 Volts/in.	
D3-D4	116 to 134 Volts/in.	
Line Width "A"[2]	0.020 Inches	Max.
Useful Scan[3]		
D1-D2	2 5/8 Inches	Min.
D3-D4	2 5/8 Inches	Min.
Spot Position[4]	—	
Maximum Ib3 at Cutoff	60 μa	dc
Interaction Factor[5]	5 x 10^{-5} Inches/V	dc
Gun to Gun Tracking[6]	—	
Pattern Distortion[7]	—	

QUICK REFERENCE DATA

2 Gun Design
7″ Flat Face
Electrostatic Focus
Electrostatic Deflection
Linear Post Acceleration
Aluminized Screen
Potted in Mu-Metal
Color Coded Leads

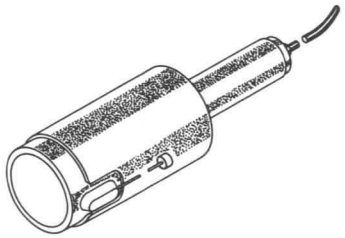

For Basing
Diagram See
Page 3

SYLVANIA ELECTRIC PRODUCTS INC.

Electronic Components Group
ELECTRONIC TUBE DIVISION
SENECA FALLS, NEW YORK

A Technical Publication
SEPTEMBER, 1964
PAGE 1 OF 3
File Under

SPECIAL AND GENERAL PURPOSE CATHODE RAY TUBES

NOTES:

1. *Focus voltage at cutoff (Ib3 = 0) not to exceed maximum value specified.*
2. *Per MIL-E-1 and at Ib3 = 25 μa (this current shall be in addition to the value of Ib3 read at cutoff).*
3. *Measured from geometric center of the face.*
4. *The shielded undeflected focused spot of each gun shall fall within a 5/8 inch square whose sides are parallel to the deflection axes. The center of this square will lie on the geometric center of the face.*
5. *The deflection of one beam when balanced dc voltages are applied to the deflection electrodes of the other, shall not be greater than the specified value.*
6. *Display a spot with gun "A" and a 0.120 inch high by 0.130 inch wide rectangle with gun "B". After appropriate centering and scale factor corrections have been made, the guns shall track such that the spot of gun "A" will stay within the rectangle of gun "B" at all points within a rectangle 4.50 inches high by 3.75 inches wide centered on the tube face.*
7. *Guns "A" and "B". With a 4.50 inch high (+D3 is top) by 3.75 inch wide rectangular raster centered on the face of the tube, the raster edges shall not deviate from straight parallel lines by more than 0.080 inch total on the upper and lower edges, and 0.080 on the right and left edges.*

OUTLINE

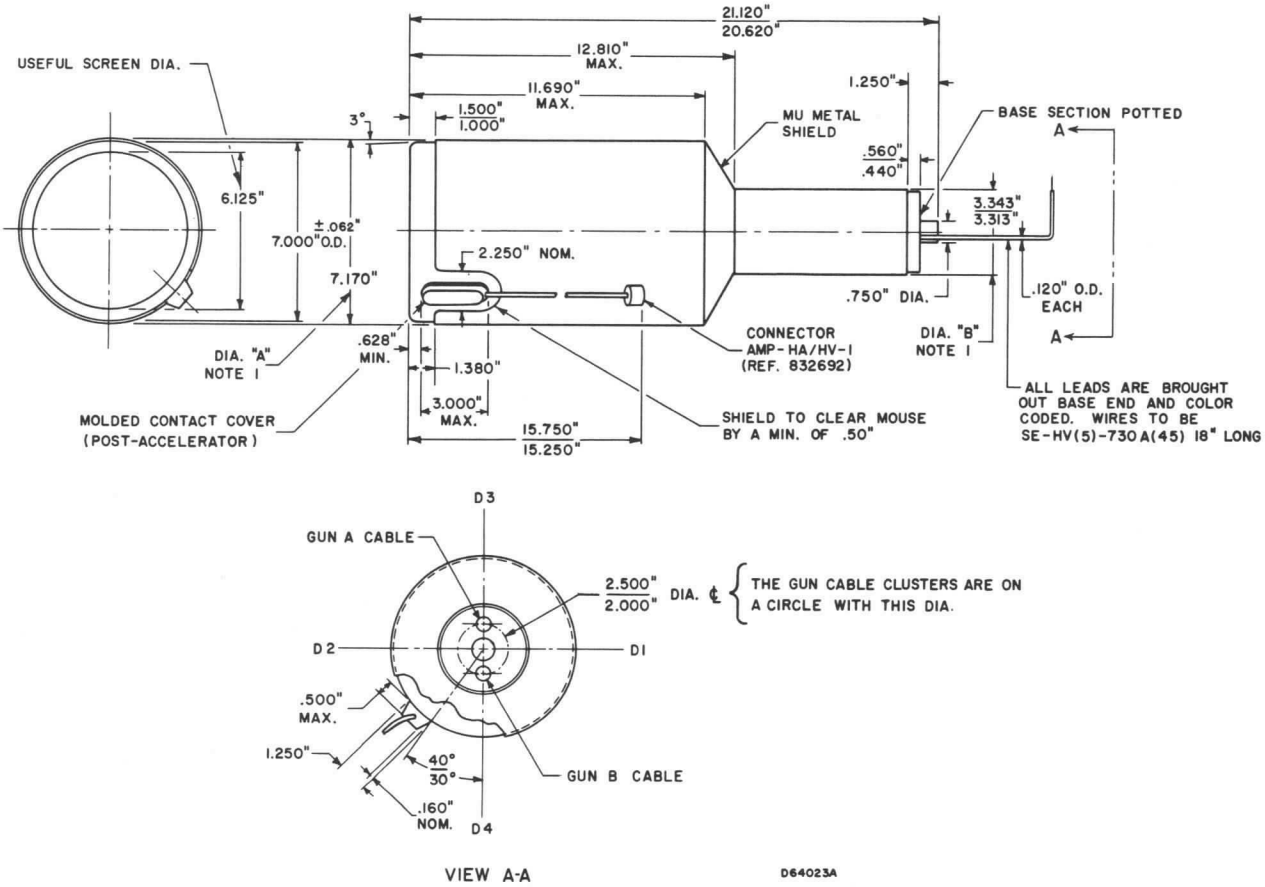

DIAGRAM NOTE:

1. *Diameter "A" to be concentric with Diameter "B" within 0.120 T.I.R.*

BASING DIAGRAM

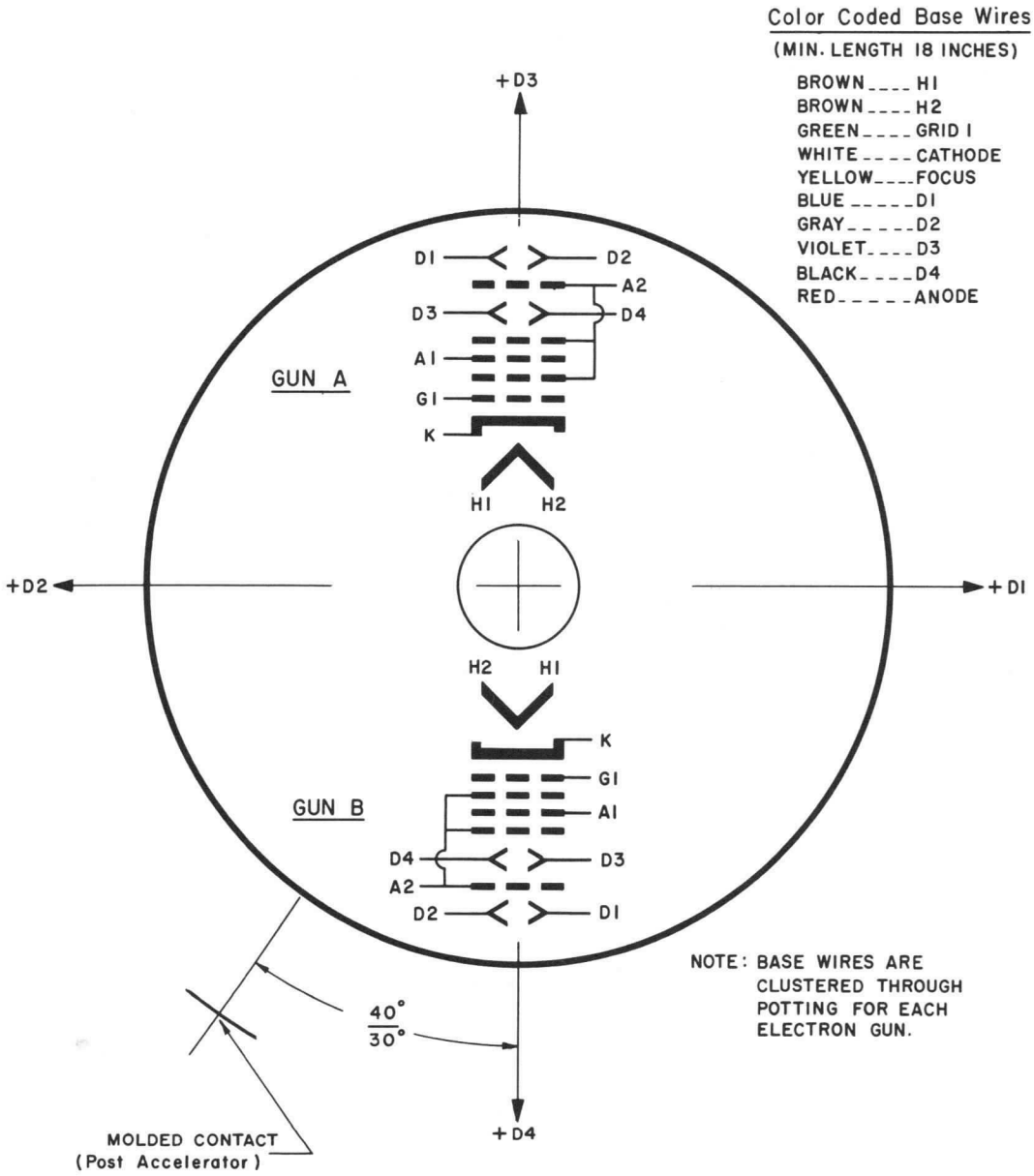

VIEW FROM BASE END OF TUBE

D64027

TENTATIVE DATA

CHARACTERISTICS

GENERAL DATA

Focusing Method	Electrostatic
Deflecting Method	Electrostatic
Phosphor*	P31
Fluorescence	Green
Phosphorescence	None
Persistence	Medium
Faceplate	Gray Filter Glass

* In addition to the phosphor shown, the SC4022 can be supplied with several other screen phosphors.

ELECTRICAL DATA

Heater Voltage	6.3	Volts
Heater Current	0.6 ± 10%	Amperes
Direct Interelectrode Capacitances (Approx.)		
Cathode to All Other Electrodes	7.0	pf
Grid No. 1 to All Other Electrodes	8.5	pf
Between Deflecting Plates 1-2	4.0	pf
Between Deflecting Plates 3-4	3.5	pf
Deflecting Plate 1 to All Other Electrodes	13.0	pf
Deflecting Plate 2 to All Other Electrodes	13.0	pf
Deflecting Plate 3 to All Other Electrodes	8.5	pf
Deflecting Plate 4 to All Other Electrodes	8.5	pf

MECHANICAL DATA

Minimum Useful Screen Diameter	9	Inches
Bulb Contact (Recessed Small Cavity Cap)	J1-22	
Neck Contact (Small Ball)	J1-25	
Base (Medium Shell Diheptal 12-Pin)	B12-37	
Weight (Approx.)	12	Pounds
J1-22 Contact Aligns with Pins #1 & 14	±10	Degrees
Positive Voltage on D1 Deflects Beam Approx. toward Pin 5		
Positive Voltage on D3 Deflects Beam Approx. toward Pin 1 & 14		

These are tentative data only. Sylvania, by the publication thereof, is under no obligation as to future manufacture of the product herein described nor as to adherence to these data in case of such future manufacture.

146 (10-58)

QUICK REFERENCE DATA

Oscilloscope Tube
10" Direct Viewed
Round Glass Type
Electrostatic Deflection
Electrostatic Focus
Post Deflection Acceleration
Aluminized Screen

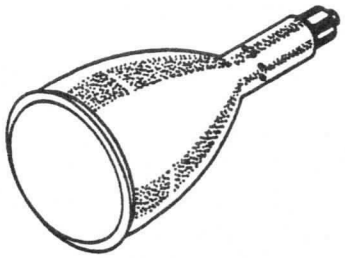

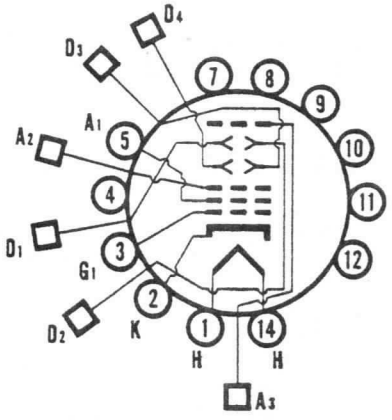

SC-4022

SYLVANIA ELECTRIC PRODUCTS INC.

Electronic Components Group
ELECTRONIC TUBE DIVISION
SENECA FALLS, NEW YORK

A Technical Publication

RATINGS

MAXIMUM RATINGS (Absolute Maximum Values)

Anode Input[1]	6	Watts
Anode No. 3 Voltage	15,000	Volts dc
Anode No. 2 Voltage	10,000	Volts dc
Anode No. 1 Voltage	3,300	Volts dc
Grid No. 1 Voltage		
Negative Bias Value	-200	Volts dc
Positive Bias Value	0	Volts dc
Positive Peak Value	2	Volts
Peak Heater-Cathode Voltage		
Heater Negative with Respect to Cathode	180	Volts
Heater Positive with Respect to Cathode	180	Volts
Peak Voltage Between Anode No. 2 and any Deflecting Plate	1,500	Volts
Ratio Post Accelerator Voltage to Anode Voltage	2:5	

TYPICAL OPERATING CONDITIONS

Anode No. 3 Voltage	12,000	Volts dc
Anode No. 2 Voltage	8,000	Volts dc
Astigmatism Correction Voltage	0 - 200	Volts dc
Anode No. 1 Voltage for Focus	2000 - 2400	Volts dc
Grid No. 1 Voltage Required for Cutoff[2]	-70 to -100	Volts dc
Deflection Factor[3]		
Deflecting Plates 1-2	200 to 245	Volts dc/Inch
Deflecting Plates 3-4	180 to 210	Volts dc/Inch
Modulation[4]	27	Volts Max.
Line Width Center	.010	Inch
Line Width Corner[5]	.015	Inch
Focus Electrode Current[4]	-25 to +25	μa dc
Spot Position, Undeflected	Within 15	mm Square
Angle Between D1-D2 Trace and D3-D4 Trace	90 ± 1	Degree

CIRCUIT VALUES

Grid No. 1 Circuit Resistance	2.0	Megohms Max.
Resistance in Any Deflection Plate Circuit	1.0	Megohms Max.

NOTES:

1. Anode input equals the product of anode No. 2 voltage and average anode No. 2 current.

2. For visual extinction of undeflected focused spot.

3. Deflection plates 1 and 2 are nearer the screen.

4. Measured on a 2 inch X 2 inch 75 line raster Light output equals 250 FT. L. using Meter. Foot Lamberts Meter Model 759.

5. 5½ inch square.

OUTLINE

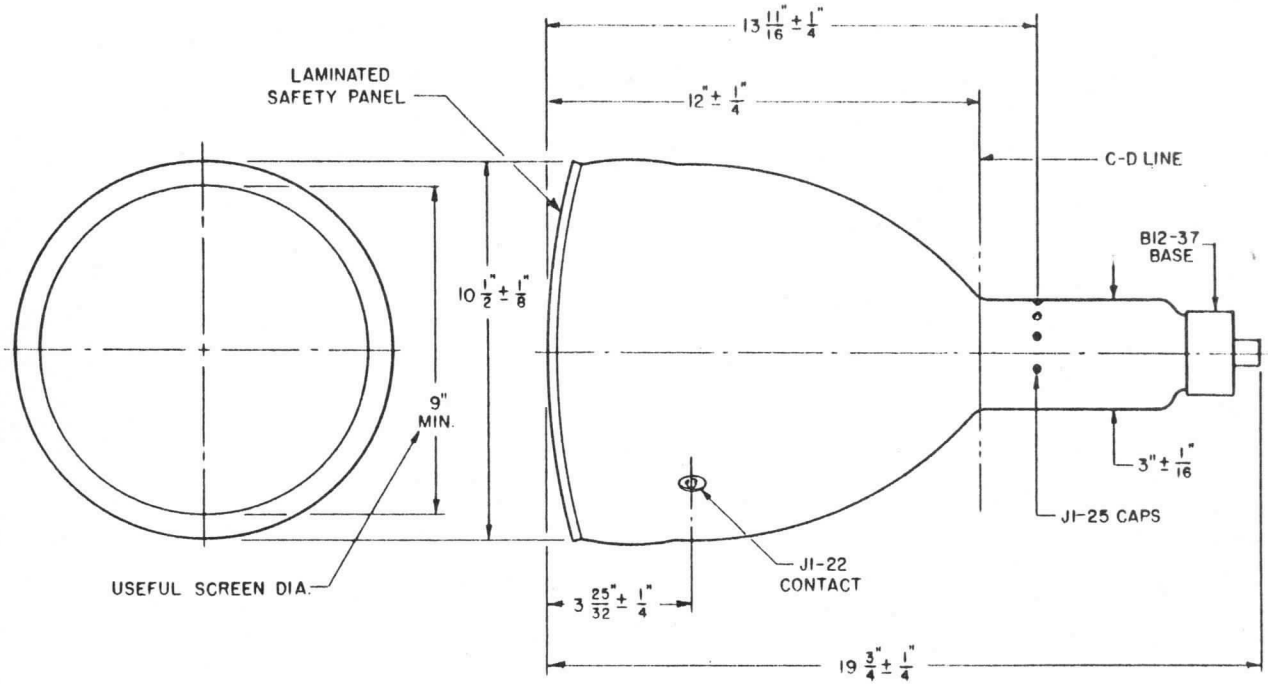

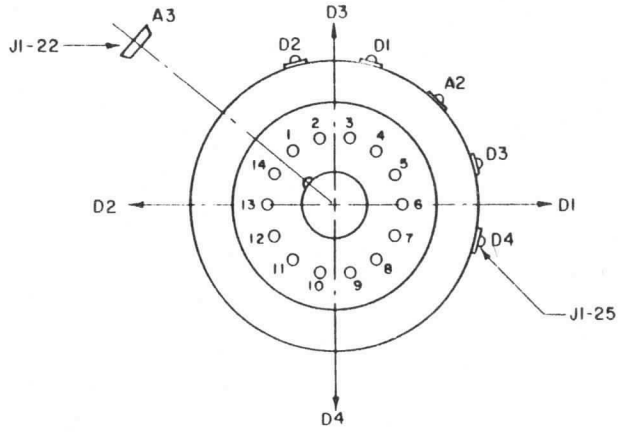

BOTTOM VIEW OF BASE

D65016

MECHANICAL DATA

Construction	Glass Substrate; Neutral Density; 70 % Transmission
Dimensions	See Outline Drawing
Basing	No. 1350 Solder Pins
Mounting Position	Any

MAXIMUM RATINGS

Peak Voltage	420 Volts
RMS Voltage (Sine Wave)	300 Volts
Peak Transient Voltage (Not to Exceed 0.5 Cycles at Operating Frequency)	500 Volts

TYPICAL OPERATING CONDITIONS

RMS Voltage	250 Volts
Frequency	400 cps
Power (All Segments Energized)	10 mW
Current (All Segments Energized)	200 μa
Power Factor	0.2
Light Output	10 Ft. Lamberts

NOTE:

1. *It is recommended that this device be operated from a minimum source impedance of 47K ohms.*

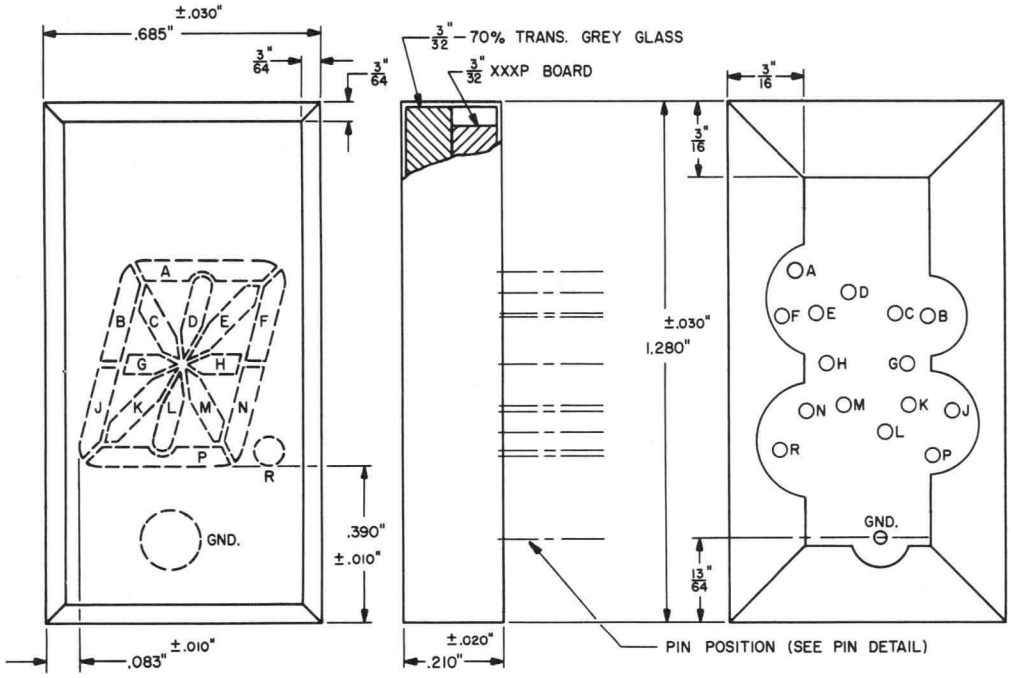

QUICK REFERENCE DATA

Electroluminescent
Alpha-Numeric Display
1 Character
14 Segment Design
0 to 9 + Decimal Point
Letters of Alphabet + Some Symbols
.5″ Character Height
Compact Design
Wide Angle Viewing
Parallax Free
Fast Switching Speed
Very Low Power Consumption
Minimal Catastrophic Failure

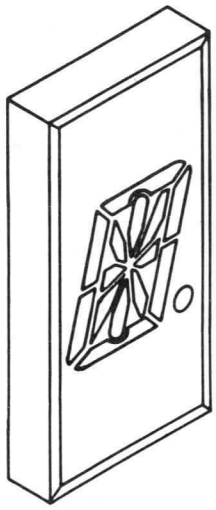

SYLVANIA
ELECTRONIC TUBES

A Division of
Sylvania Electric Products Inc.

PICTURE TUBE
OPERATIONS

SENECA FALLS, NEW YORK

Prepared and Released By The
TECHNICAL PUBLICATIONS SECTION
EMPORIUM, PENNSYLVANIA

DECEMBER, 1963

File Under
ELECTROLUMINESCENT DEVICES

PIN DETAIL

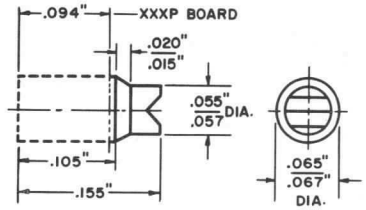

No. 1350 Solder Pin

TYPICAL TRANSISTORIZED POWER SUPPLY

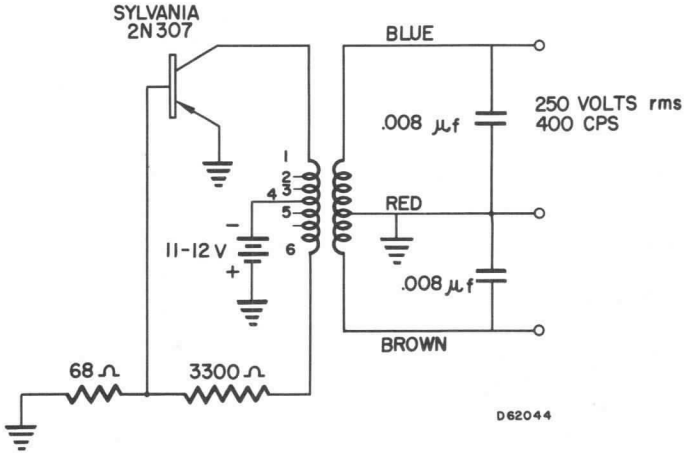

TRANSFORMER–STANCOR A-3856

LIGHT OUTPUT VS. VOLTAGE AND FREQUENCY

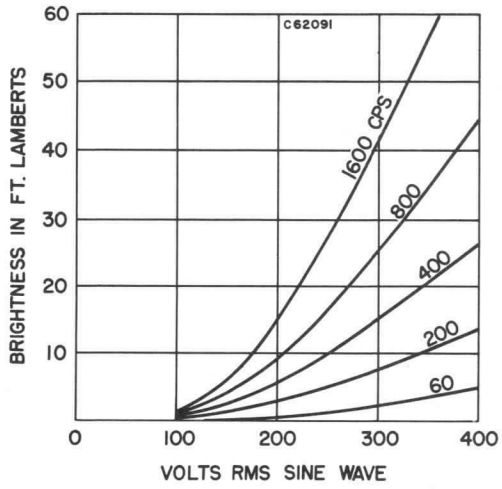

TYPICAL SPECTRAL ENERGY EMISSION CHARACTERISTICS

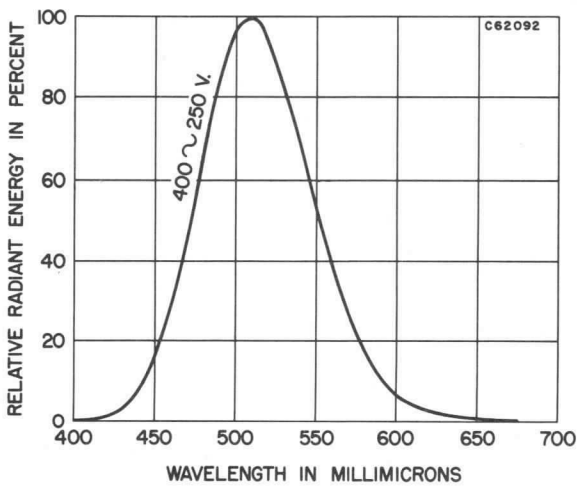

MECHANICAL DATA

Construction	Glass Substrate; Neutral Density; 70 % Transmission
Dimensions	See Outline Drawing
Basing	No. 1333 Pins
Mounting Position	Any

MAXIMUM RATINGS

Peak Voltage	420 Volts
RMS Voltage (Sine Wave)	300 Volts
Peak Transient Voltage (Not to Exceed 0.5 Cycles at Operating Frequency)	500 Volts

TYPICAL OPERATING CONDITIONS

RMS Voltage	250 Volts
Frequency	400 cps
Power (All Segments Energized)	7.5 mW
Current (All Segments Energized)	150 μa
Power Factor	0.2
Light Output	10 Ft. Lamberts

NOTE:

1. *It is recommended that this device be operated from a minimum source impedance of 47K ohms.*

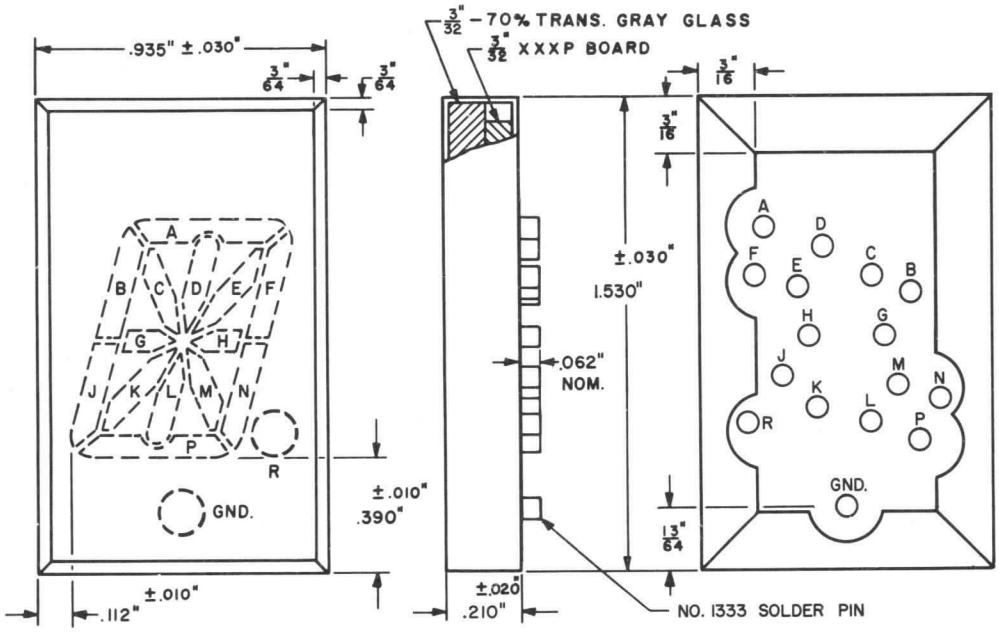

QUICK REFERENCE DATA

The Sylvania Type AN71 is an electroluminescent alpha-numeric display device. It features 14 segments in a character height of 3/4". Combinations of segments may be lighted to form all letters in the alphabet as well as the numbers 0 thru 9 and some symbols. The device features wide viewing angle, minimal catastrophic failure and extremely low power consumption.

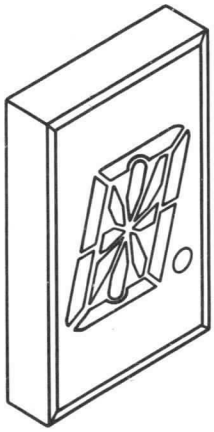

SYLVANIA
ELECTRONIC TUBES

A Division of
Sylvania Electric Products Inc.

PICTURE TUBE
OPERATIONS

SENECA FALLS, NEW YORK

Prepared and Released By The
TECHNICAL PUBLICATIONS SECTION
EMPORIUM, PENNSYLVANIA

MARCH, 1963

File Under
ELECTROLUMINESCENT DEVICES

LIGHT OUTPUT VS. VOLTAGE AND FREQUENCY

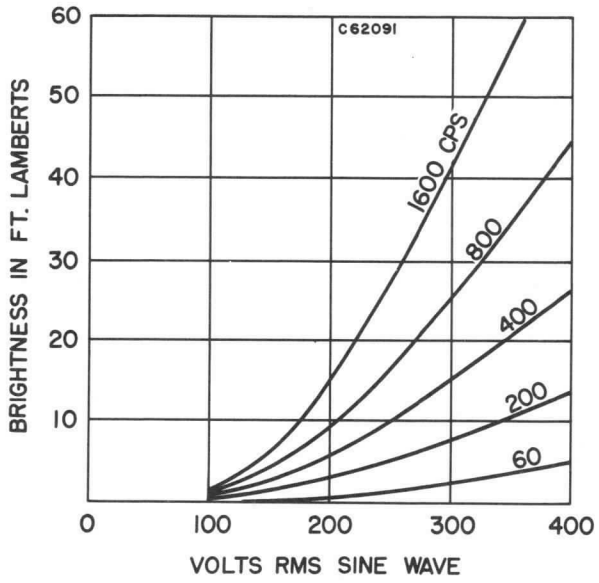

TYPICAL SPECTRAL ENERGY EMISSION CHARACTERISTICS

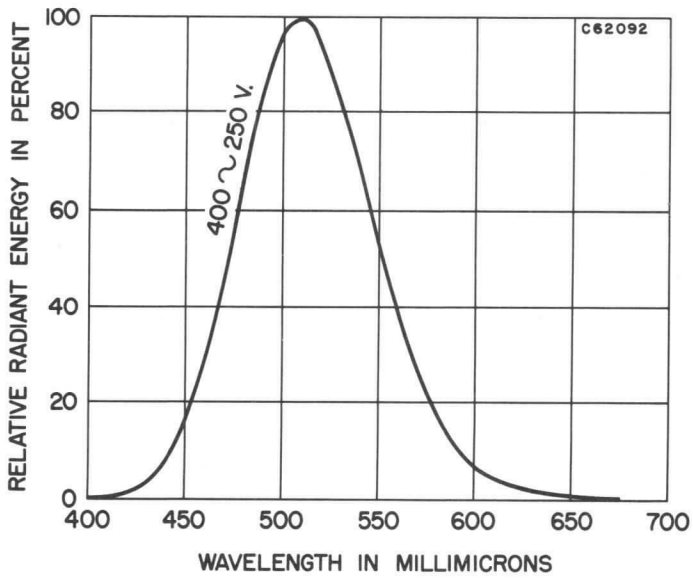

TYPICAL TRANSISTORIZED POWER SUPPLY

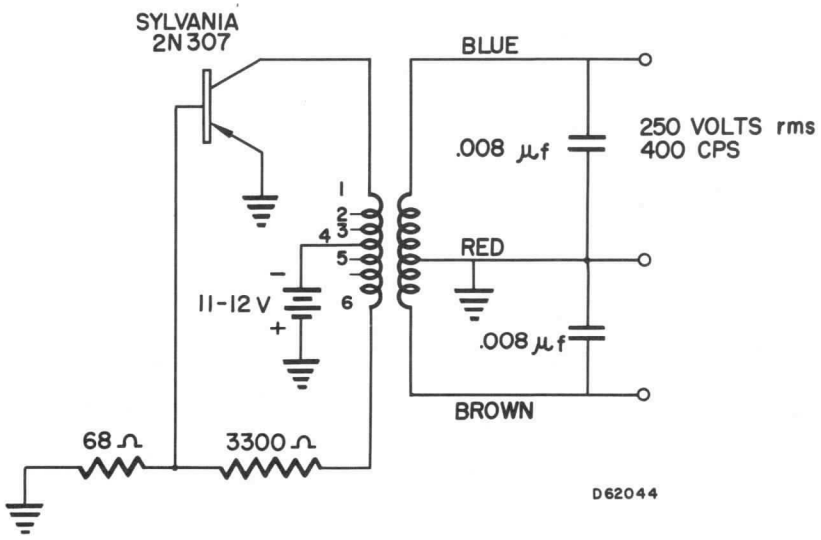

TRANSFORMER-STANCOR A-3856

SYLVANIA

engineering data service

SYLVANIA

NU51

MECHANICAL DATA

Construction	Glass Substrate; Neutral Density; 70 % Transmission
Dimensions	See Outline Drawing
Basing	No. 1350 Pins
Mounting Position	Any

MAXIMUM RATINGS

Peak Voltage	420 Volts
RMS Voltage (Sine Wave)	300 Volts
Peak Transient Voltage (Not to Exceed 0.5 Cycles at Operating Frequency)	500 Volts

TYPICAL OPERATING CONDITIONS

Voltage	250 Volts
Frequency	400 cps
Power (All Segments Energized)	5 Mw.
Current (All Segments Energized)	100 μa
Power Factor	0.2
Light Output	10.0 Ft. Lamberts

NOTE:

It is recommended that this device be operated from a minimum source impedance of 47K ohms.

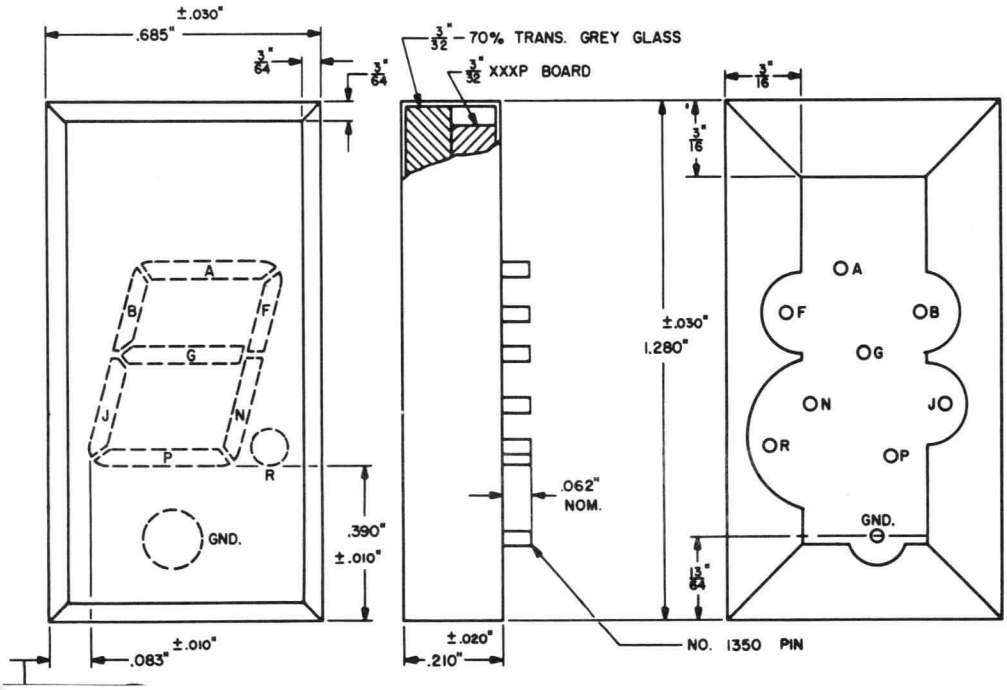

QUICK REFERENCE DATA

The Sylvania Type NU51 is an electroluminescent numeric display device. It features 7 segments plus a decimal point, in a character height of ½". Combinations of segments may be lighted to form all the numbers from "0" thru "9". The device features wide angle viewing, minimal catastrophic failure and very low power consumption.

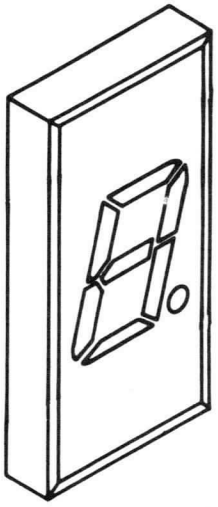

SYLVANIA
ELECTRONIC TUBES

A Division of
Sylvania Electric Products Inc.

PICTURE TUBE
OPERATIONS

SENECA FALLS, NEW YORK

Prepared and Released By The
TECHNICAL PUBLICATIONS SECTION
EMPORIUM, PENNSYLVANIA

JUNE, 1963

File Under
ELECTROLUMINESCENT DEVICES

LIGHT OUTPUT VS. VOLTAGE AND FREQUENCY

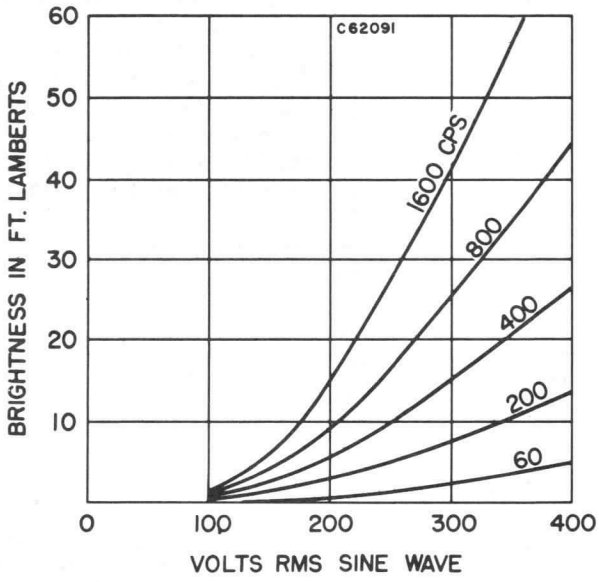

TYPICAL SPECTRAL ENERGY EMISSION CHARACTERISTICS

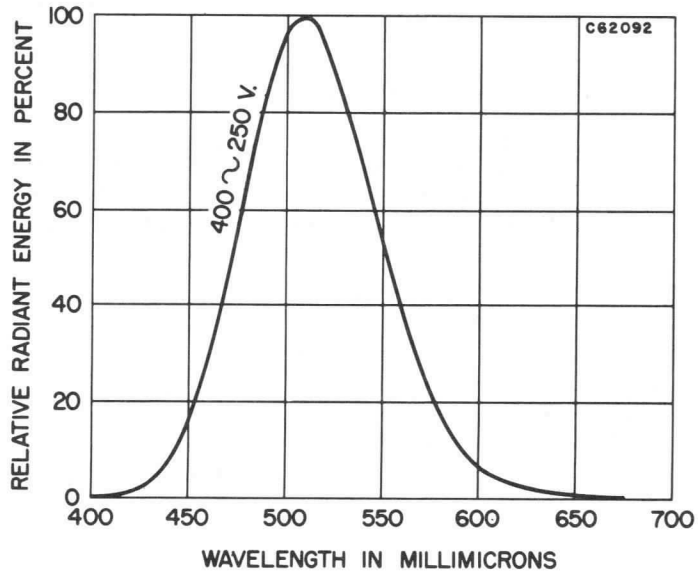

TYPICAL TRANSISTORIZED POWER SUPPLY

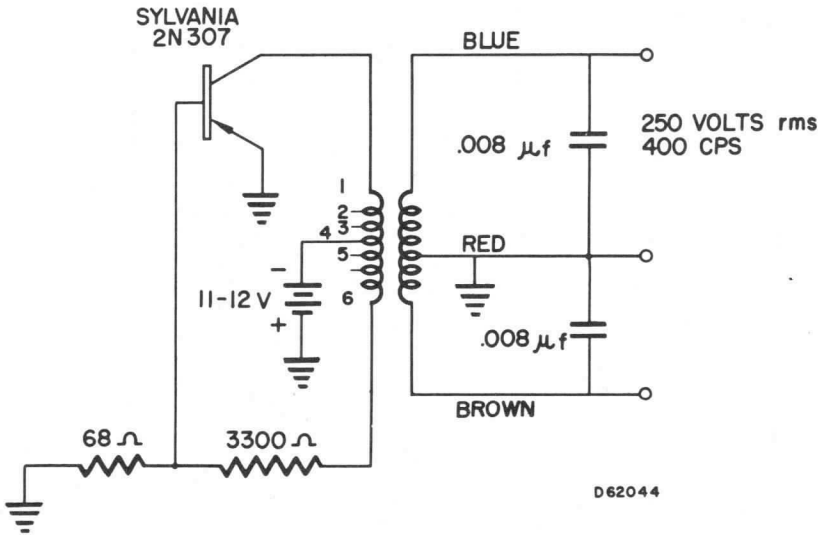

TRANSFORMER – STANCOR A-3856

MECHANICAL DATA

Construction	Glass Substrate; Neutral Density; 70 % Transmission
Dimensions	See Outline Drawing
Basing	
NU71	No. 1333 Solder Pins
NU71B	No. 1299R Clip Pins (K46-1101 Clips)
Mounting Position	Any

MAXIMUM RATINGS

Peak Voltage	420 Volts
RMS Voltage (Sine Wave)	300 Volts
Peak Transient Voltage (Not to Exceed 0.5 Cycles at Operating Frequency)	500 Volts

TYPICAL OPERATING CONDITIONS

RMS Voltage	250 Volts
Frequency	400 cps
Power (All Segments Energized)	7 mW
Current (All Segments Energized)	150 μa
Power Factor	0.2
Light Output	10 Ft. Lamberts

NOTE:

1. *It is recommended that this device be operated from a minimum source impedance of 47K ohms.*

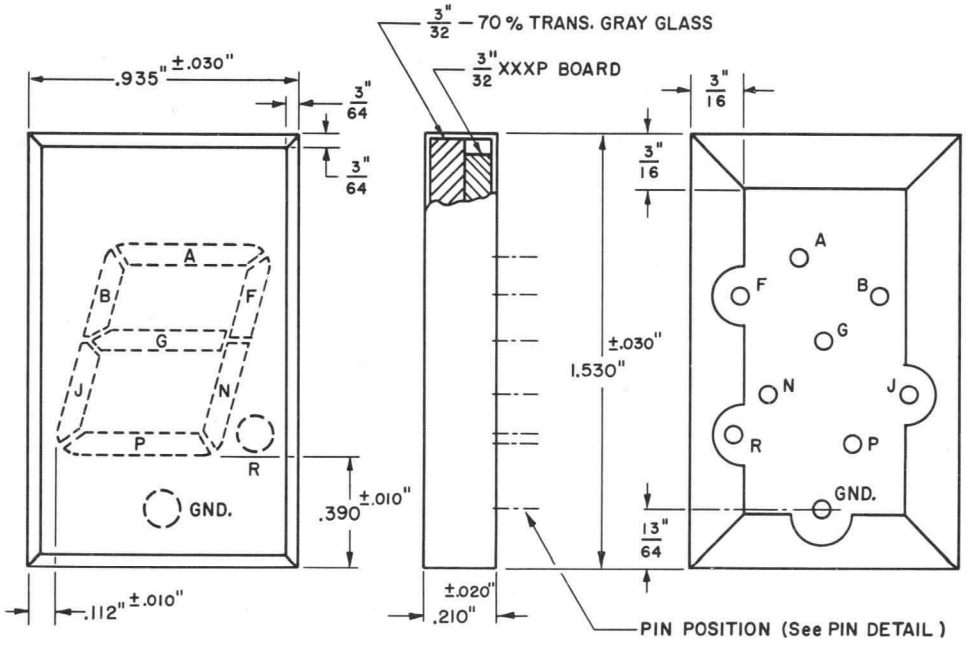

QUICK REFERENCE DATA

Electroluminescent
Numeric Display
1 Digit
7 Segment Design
0 to 9 + Decimal Point
.75" Character Height
Compact Design
Wide Angle Viewing
Parallax Free
Fast Switching Speed
Very Low Power Consumption
Minimal Catastrophic Failure

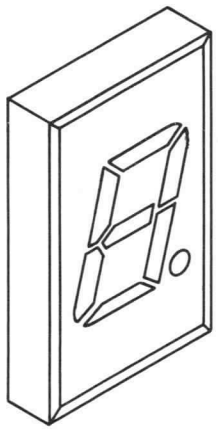

SYLVANIA
ELECTRONIC TUBES

A Division of
Sylvania Electric Products Inc.

PICTURE TUBE
OPERATIONS

SENECA FALLS, NEW YORK

Prepared and Released By The
TECHNICAL PUBLICATIONS SECTION
EMPORIUM, PENNSYLVANIA
OCTOBER, 1963

File Under
ELECTROLUMINESCENT DEVICES

PIN DETAIL

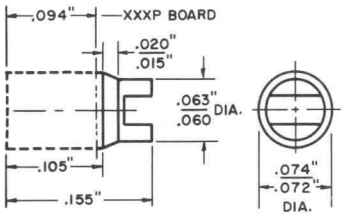

No. 1333 Solder Pin

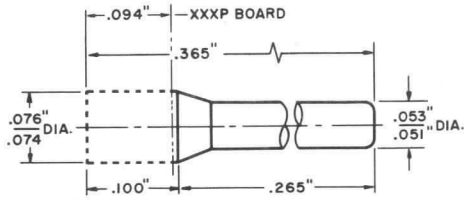

No. 1299R Clip Pin

TYPICAL TRANSISTORIZED POWER SUPPLY

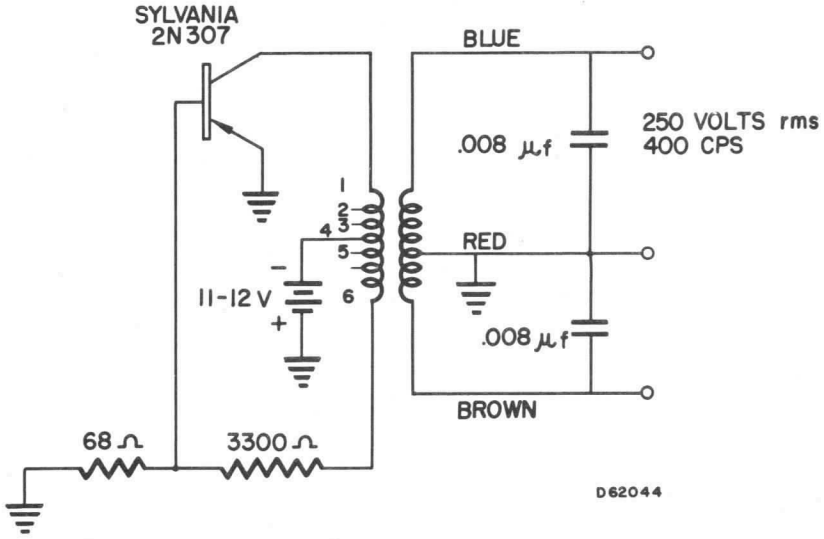

TRANSFORMER–STANCOR A-3856

LIGHT OUTPUT VS. VOLTAGE AND FREQUENCY

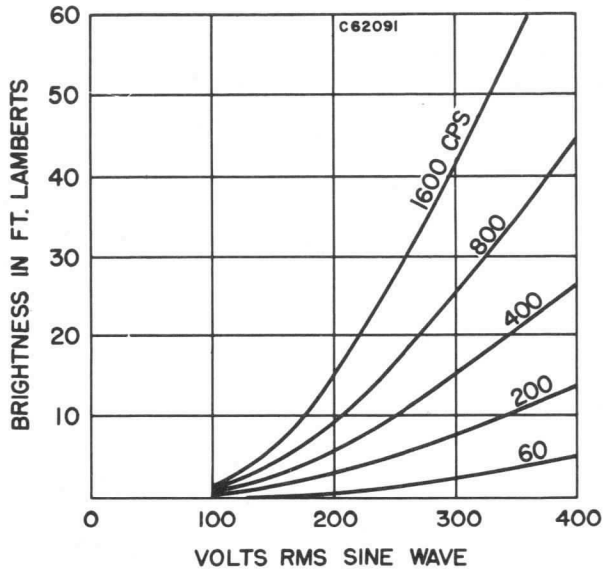

TYPICAL SPECTRAL ENERGY EMISSION CHARACTERISTICS

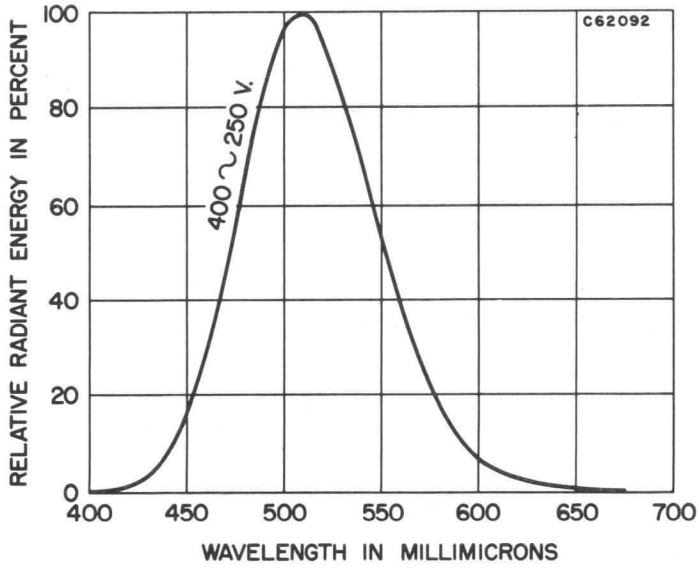

MECHANICAL DATA

Construction	Glass Substrate; Neutral Density; 70 % Transmission
Dimensions	See Outline Drawing
Basing	No. 1299R Clip Pins (K46-1101 Clips)
Mounting Position	Any

MAXIMUM RATINGS

Peak Voltage	420 Volts
RMS Voltage (Sine Wave)	300 Volts
Peak Transient Voltage (Not to Exceed 0.5 Cycles at Operating Frequency)	500 Volts

TYPICAL OPERATING CONDITIONS

RMS Voltage	250 Volts
Frequency	400 cps
Power (Per Numeric)	7 mW
Current (Per Numeric)	150 μa
Power Factor	0.2
Light Output	10 Ft. Lamberts

NOTE:

1. *It is recommended that this device be operated from a minimum source impedance of 33K ohms.*

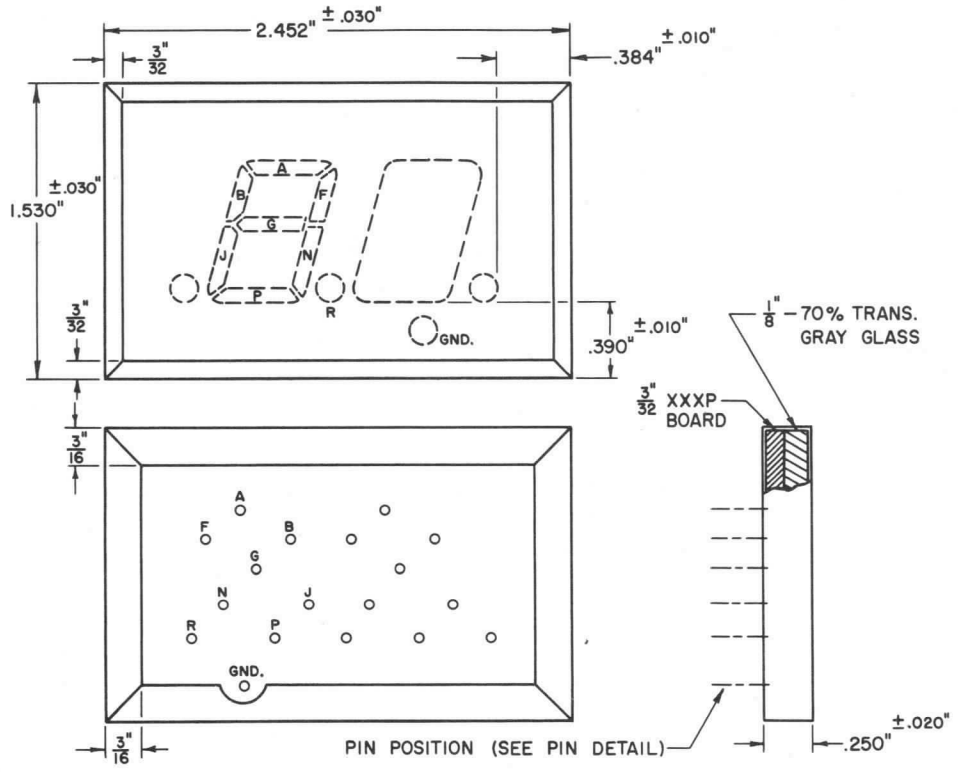

QUICK REFERENCE DATA

Electroluminescent
Multi-Numeric Display
2 Digit
7 Segment Design
0 to 9 + 3 Decimal Points
.75" Character Height
Compact Design
Wide Angle Viewing
Parallax Free
Fast Switching Speed
Very Low Power Consumption
Minimal Catastrophic Failure

SYLVANIA
ELECTRONIC TUBES
A Division of
Sylvania Electric Products Inc.
PICTURE TUBE
OPERATIONS
SENECA FALLS, NEW YORK

Prepared and Released By The
TECHNICAL PUBLICATIONS SECTION
EMPORIUM, PENNSYLVANIA
DECEMBER, 1963

File Under
ELECTROLUMINESCENT DEVICES

PIN DETAIL

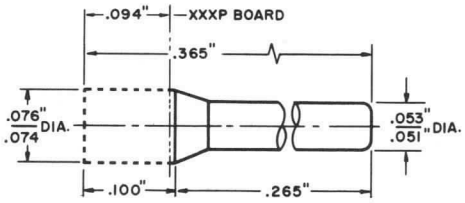

No. 1299R Clip Pin

TYPICAL TRANSISTORIZED POWER SUPPLY

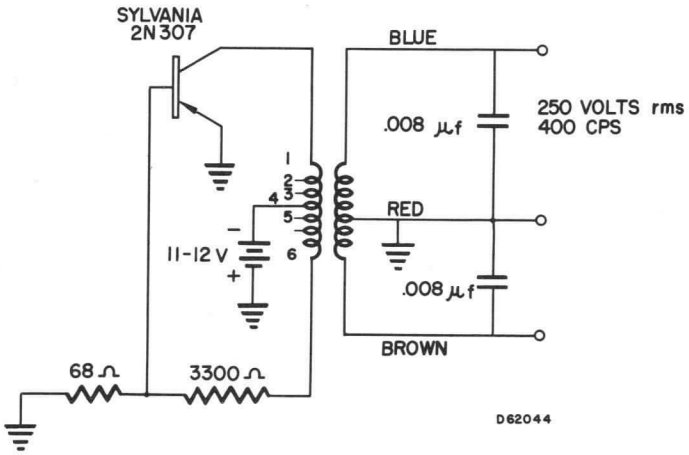

TRANSFORMER-STANCOR A-3856

LIGHT OUTPUT VS. VOLTAGE AND FREQUENCY

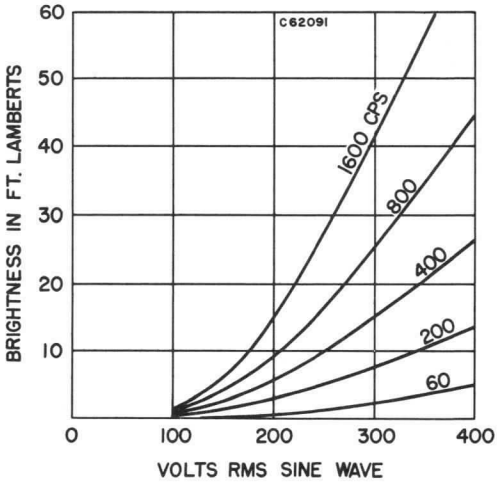

TYPICAL SPECTRAL ENERGY EMISSION CHARACTERISTICS

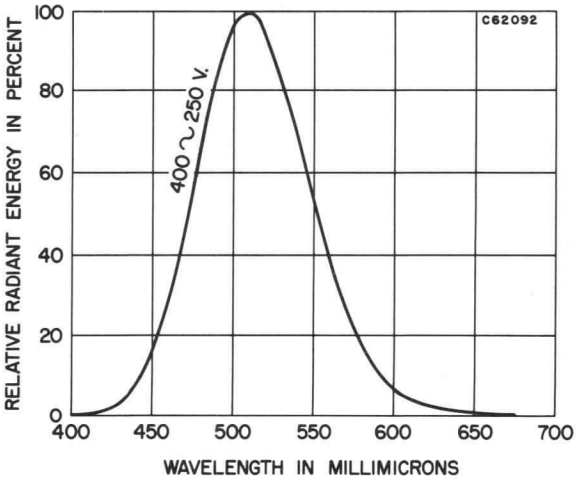

MECHANICAL DATA

Construction	Glass Substrate; Neutral Density; 70 % Transmission
Dimensions	See Outline Drawing
Basing	No. 1299R Clip Pins (K46-1101 Clips)
Mounting Position	Any

MAXIMUM RATINGS

Peak Voltage	420 Volts
RMS Voltage (Sine Wave)	300 Volts
Peak Transient Voltage (Not to Exceed 0.5 Cycles at Operating Frequency)	500 Volts

TYPICAL OPERATING CONDITIONS

RMS Voltage	250 Volts
Frequency	400 cps
Power (Per Numeric)	7 mW
Current (Per Numeric)	150 μa
Power Factor	0.2
Light Output	10 Ft. Lamberts

NOTES:

1. *It is recommended that this device be operated from a minimum source impedance of 27K ohms.*
2. *The two common connector pins should be tied together.*

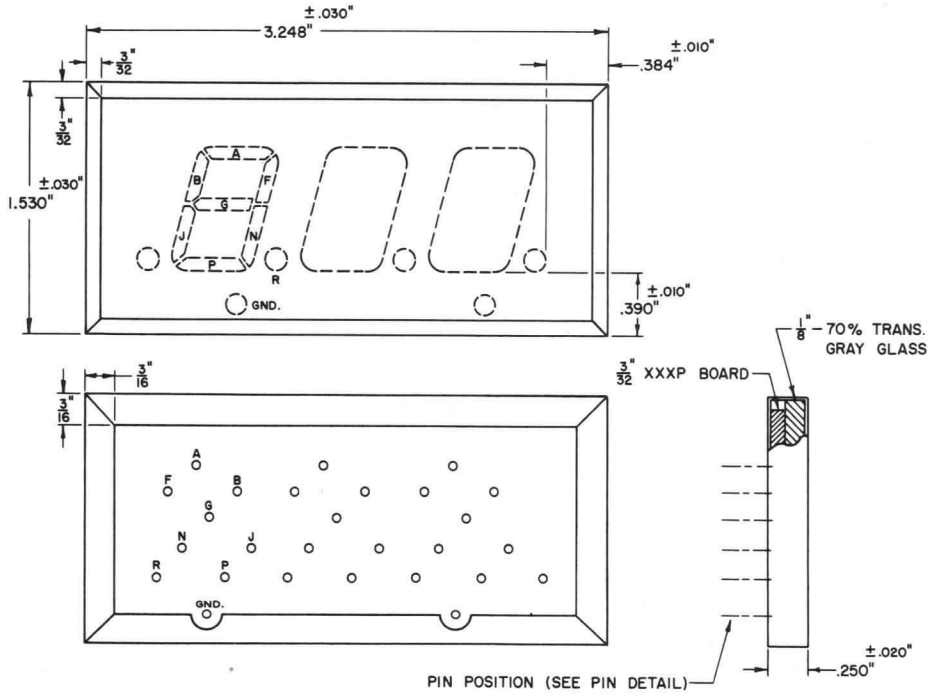

QUICK REFERENCE DATA

Electroluminescent
Multi-Numeric Display
3 Digit
7 Segment Design
0 to 9 + 4 Decimal Points
.75″ Character Height
Compact Design
Wide Angle Viewing
Parallax Free
Fast Switching Speed
Very Lower Power Consumption
Minimal Catastrophic Failure

SYLVANIA
ELECTRONIC TUBES

A Division of
Sylvania Electric Products Inc.

PICTURE TUBE
OPERATIONS

SENECA FALLS, NEW YORK

Prepared and Released By The
TECHNICAL PUBLICATIONS SECTION
EMPORIUM, PENNSYLVANIA

DECEMBER, 1963

File Under
ELECTROLUMINESCENT DEVICES

PIN DETAIL

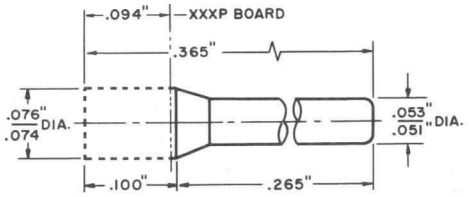

No. 1299R Clip Pin

TYPICAL TRANSISTORIZED POWER SUPPLY

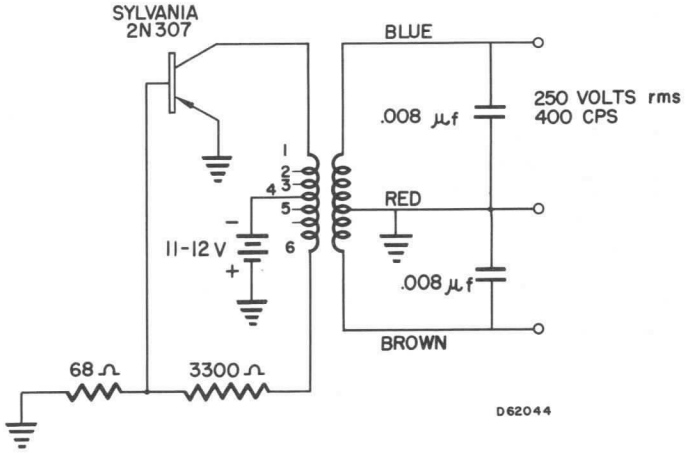

TRANSFORMER–STANCOR A-3856

LIGHT OUTPUT VS. VOLTAGE AND FREQUENCY

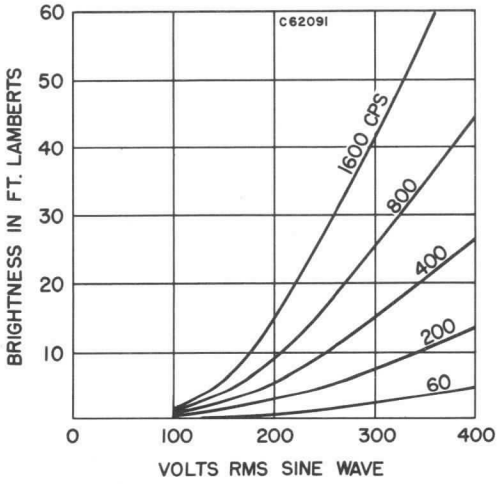

TYPICAL SPECTRAL ENERGY EMISSION CHARACTERISTICS

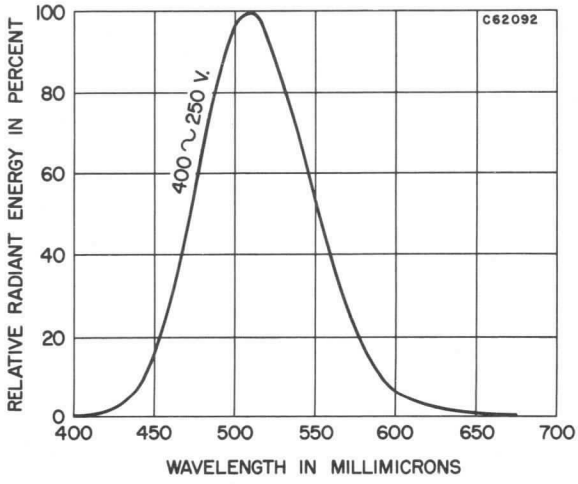

MECHANICAL DATA

Construction	Glass Substrate; Neutral Density; 70 % Transmission
Dimensions	See Outline Drawing
Basing	No. 1299R Pins; K46-1101 Clips
Mounting Position	Any

MAXIMUM RATINGS

Peak Voltage	420 Volts
RMS Voltage (Sine Wave)	300 Volts
Peak Transient Voltage (Not to Exceed 0.5 Cycles at Operating Frequency)	500 Volts

TYPICAL OPERATING CONDITIONS

RMS Voltage	250 Volts
Frequency	400 cps
Power (Per Numeric)	7 mW
Current (Per Numeric)	150 μa
Power Factor	0.2
Light Output	10 Ft. Lamberts

NOTES:

1. *It is recommended that this device be operated from a minimum source impedance of 27K ohms.*
2. *The two common connector pins should be tied together.*

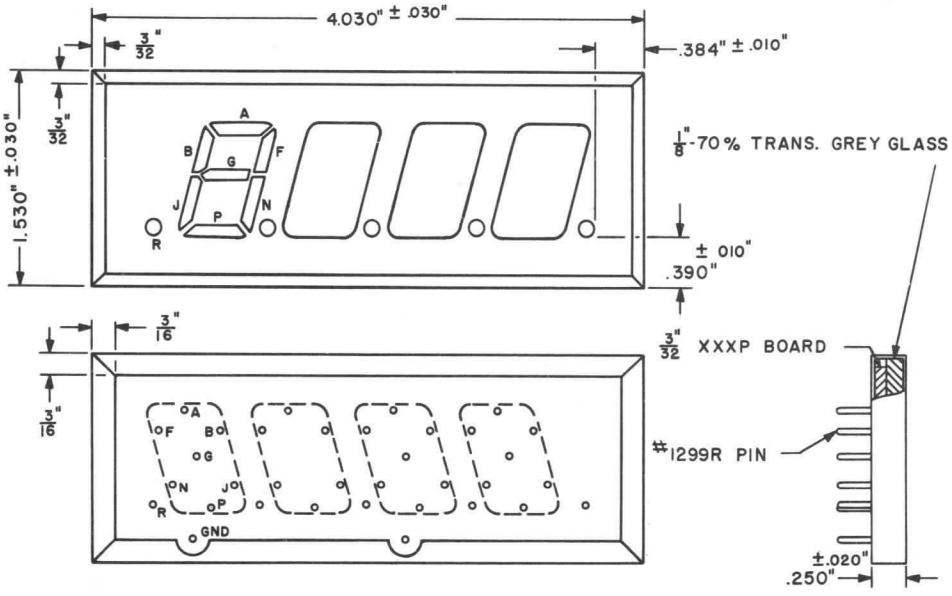

QUICK REFERENCE DATA

The Sylvania Type NU74 is an electroluminescent numeric display device featuring 3/4" characters. Each of the 4 digits is capable of displaying the numbers 0 thru 9. The device features wide viewing angle and very low power consumption.

SYLVANIA
ELECTRONIC TUBES

A Division of
Sylvania Electric Products Inc.

PICTURE TUBE
OPERATIONS

SENECA FALLS, NEW YORK

Prepared and Released By The
TECHNICAL PUBLICATIONS SECTION
EMPORIUM, PENNSYLVANIA

MARCH, 1963

File Under
ELECTROLUMINESCENT DEVICES

LIGHT OUTPUT VS. VOLTAGE AND FREQUENCY

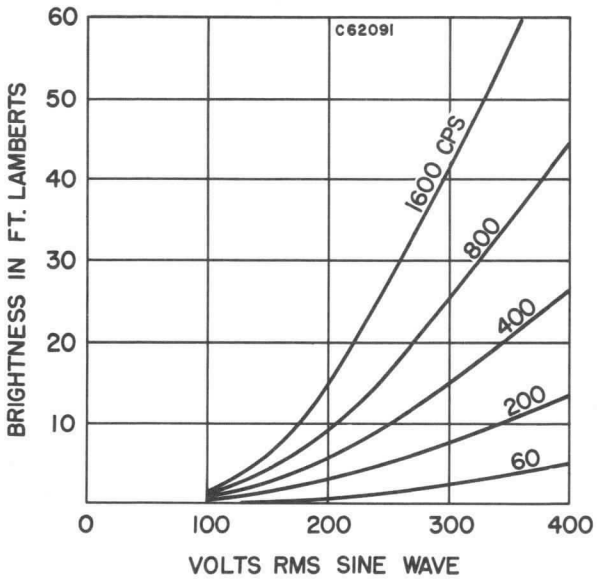

TYPICAL SPECTRAL ENERGY EMISSION CHARACTERISTICS

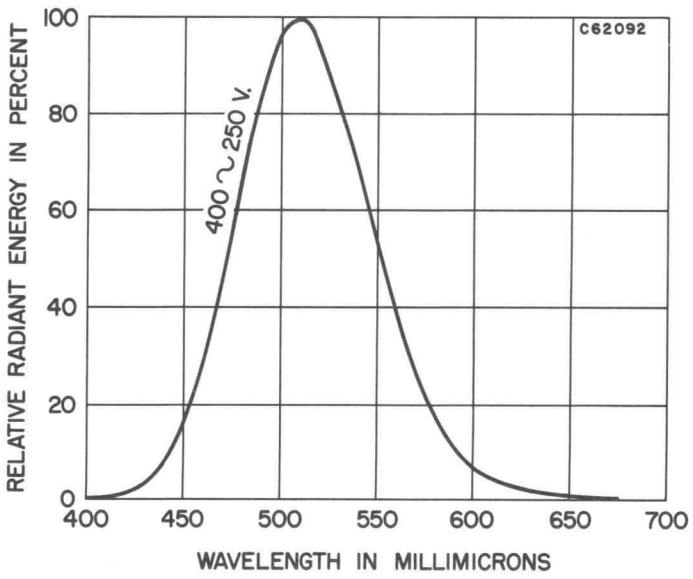

TYPICAL TRANSISTORIZED POWER SUPPLY

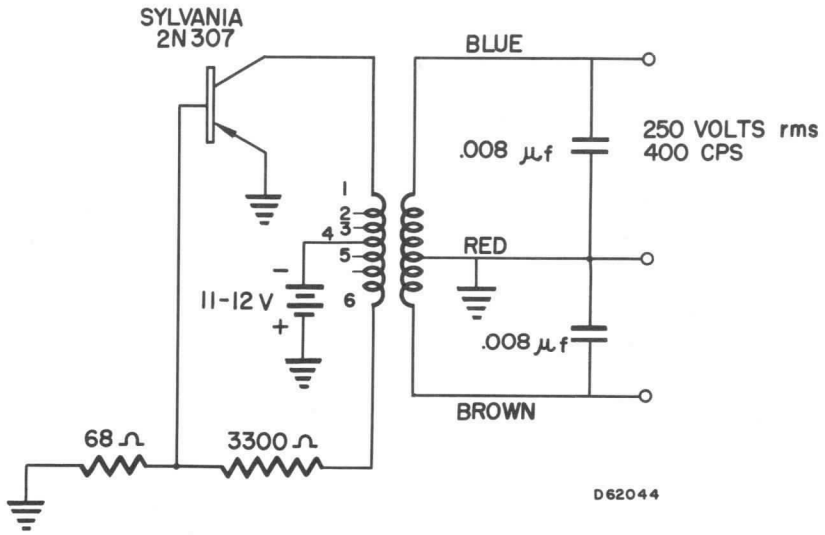

TRANSFORMER–STANCOR A-3856

MECHANICAL DATA

Construction	Glass Substrate; Neutral Density; 70 % Transmission
Dimensions	See Outline Drawing
Basing	No. 1299R Clip Pins (K46-1101 Clips)
Mounting Position	Any

MAXIMUM RATINGS

Peak Voltage	420 Volts
RMS Voltage (Sine Wave)	300 Volts
Peak Transient Voltage (Not to Exceed 0.5 Cycles at Operating Frequency)	500 Volts

TYPICAL OPERATING CONDITIONS

RMS Voltage	250 Volts
Frequency	400 cps
Power (Per Numeric)	7 mW
Current (Per Numeric)	150 μa
Power Factor	0.2
Light Output	10 Ft. Lamberts

NOTES:

1. *It is recommended that this device be operated from a minimum source impedance of 27K ohms.*
2. *The three common connector pins should be tied together.*

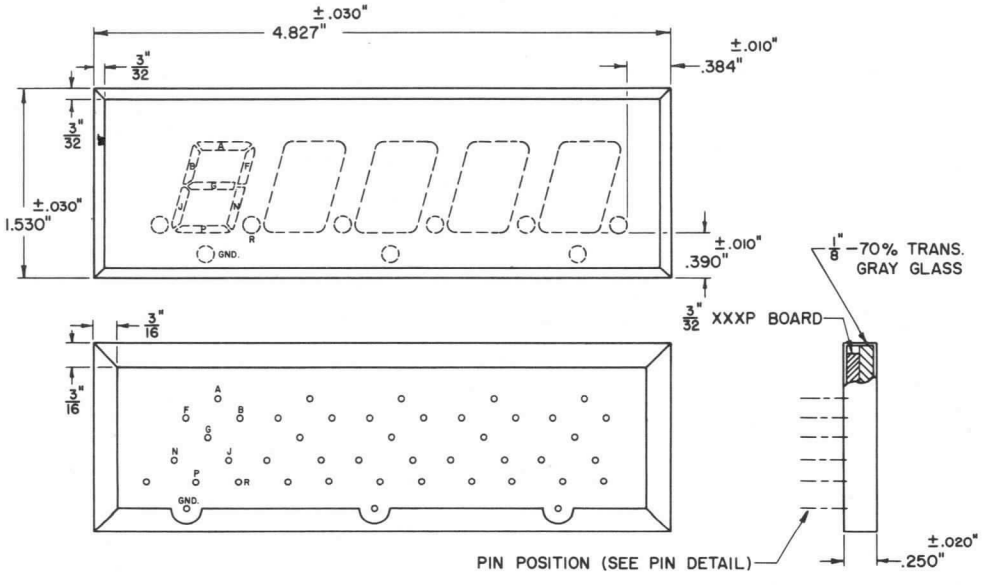

QUICK REFERENCE DATA

Electroluminescent
Multi-Numeric Display
5 Digit
7 Segment Design
0 to 9 + 6 Decimal Points
.75″ Character Height
Compact Design
Wide Angle Viewing
Parallax Free
Fast Switching Speed
Very Low Power Consumption
Minimal Catastrophic Failure

SYLVANIA
ELECTRONIC TUBES

A Division of
Sylvania Electric Products Inc.

PICTURE TUBE
OPERATIONS

SENECA FALLS, NEW YORK

Prepared and Released By The
TECHNICAL PUBLICATIONS SECTION
EMPORIUM, PENNSYLVANIA

DECEMBER, 1963

File Under
ELECTROLUMINESCENT DEVICES

PIN DETAIL

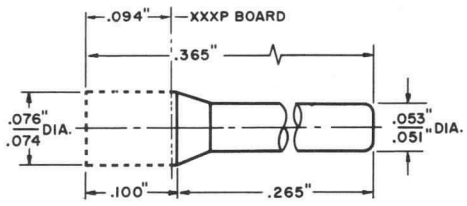

No. 1299R Clip Pin

TYPICAL TRANSISTORIZED POWER SUPPLY

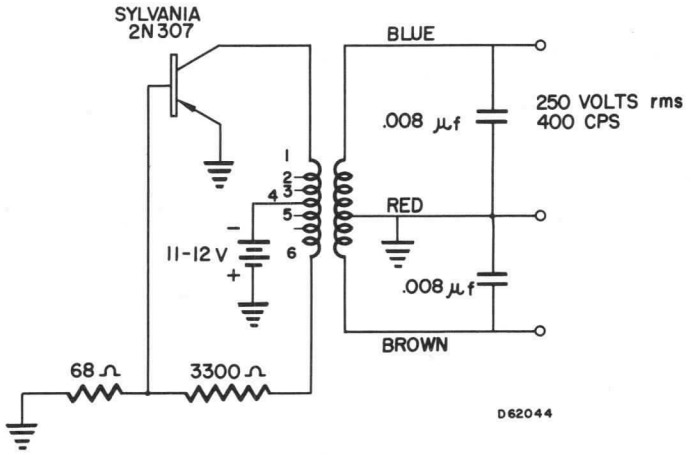

TRANSFORMER–STANCOR A-3856

LIGHT OUTPUT VS. VOLTAGE AND FREQUENCY

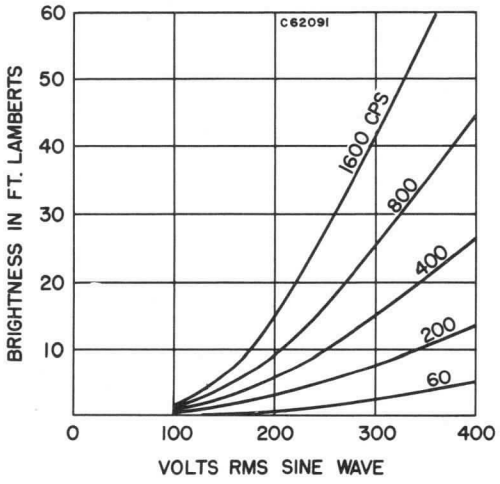

TYPICAL SPECTRAL ENERGY EMISSION CHARACTERISTICS

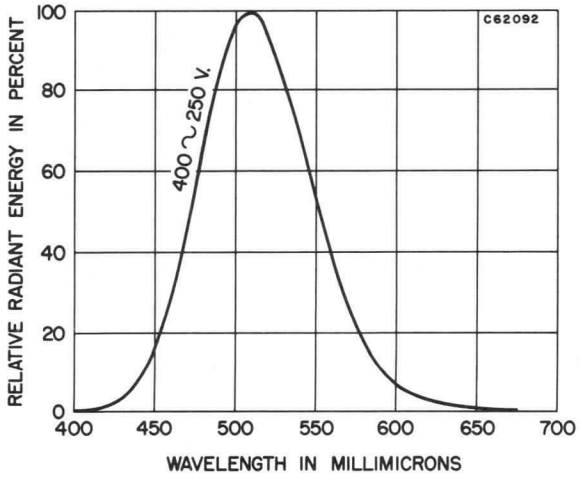

MECHANICAL DATA

Construction	Glass Substrate; Neutral Density; 70 % Transmission
Dimensions	See Outline Drawing
Basing	.No. 1299R Pins; K46-1101 Clips
Mounting Position	Any

MAXIMUM RATINGS

Peak Voltage	420 Volts
RMS Voltage (Sine Wave)	300 Volts
Peak Transient Voltage (Not to Exceed 0.5 Cycles at Operating Frequency)	500 Volts

TYPICAL OPERATING CONDITIONS

RMS Voltage	250 Volts
Frequency	400 cps
Power (Per Numeric)	7 mW
Current (Per Numeric)	150 μa
Power Factor	0.2
Light Output	10 Ft. Lamberts

NOTES:

1. *It is recommended that this device be operated from a minimum source impedance of 27K ohms.*
2. *The two common connector pins should be tied together.*

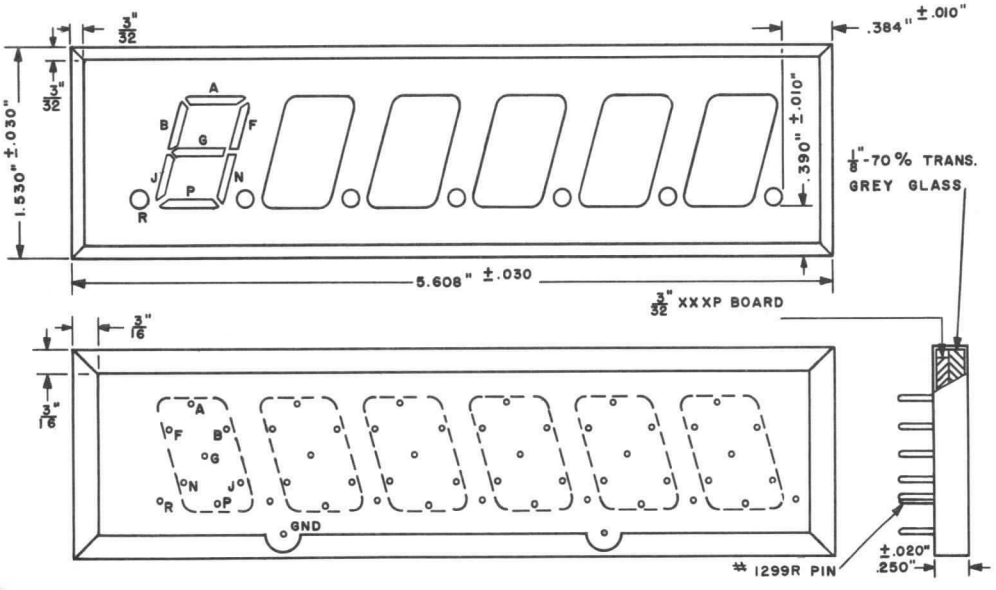

QUICK REFERENCE DATA

The Sylvania Type NU76 is an electroluminescent numeric display device featuring 3/4" characters. Each of the 6 digits is capable of displaying the numbers 0 thru 9. The device features wide viewing angle and very low power consumption.

SYLVANIA
ELECTRONIC TUBES
A Division of
Sylvania Electric Products Inc.
PICTURE TUBE
OPERATIONS
SENECA FALLS, NEW YORK

Prepared and Released By The
TECHNICAL PUBLICATIONS SECTION
EMPORIUM, PENNSYLVANIA
MARCH, 1963

File Under
ELECTROLUMINESCENT DEVICES

LIGHT OUTPUT VS. VOLTAGE AND FREQUENCY

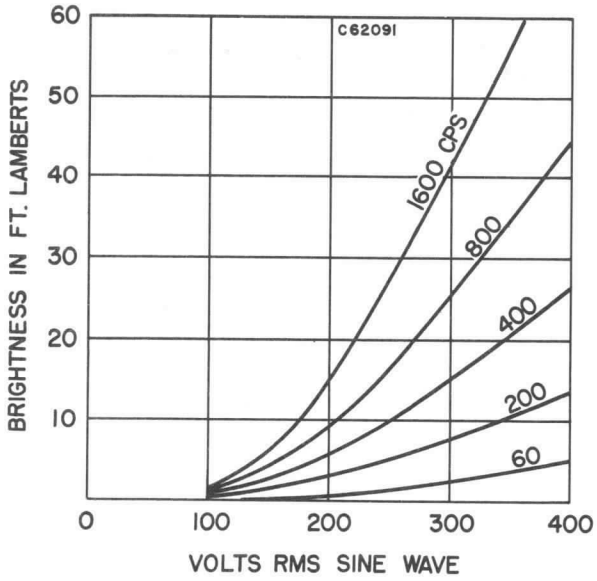

TYPICAL SPECTRAL ENERGY EMISSION CHARACTERISTICS

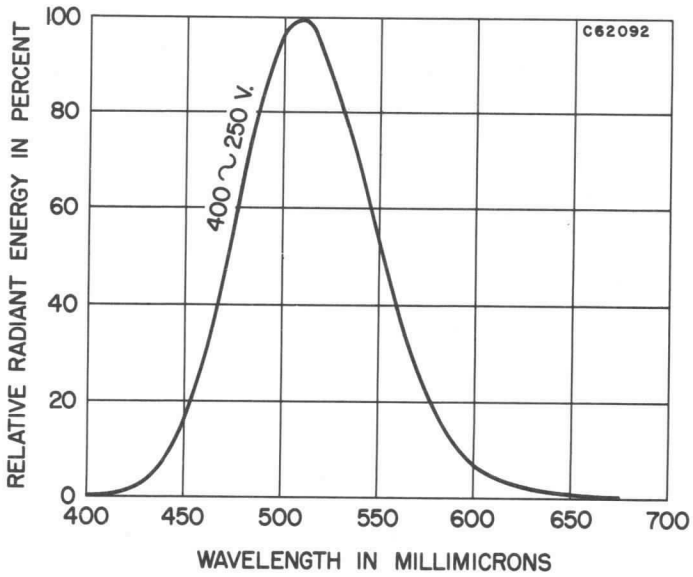

TYPICAL TRANSISTORIZED POWER SUPPLY

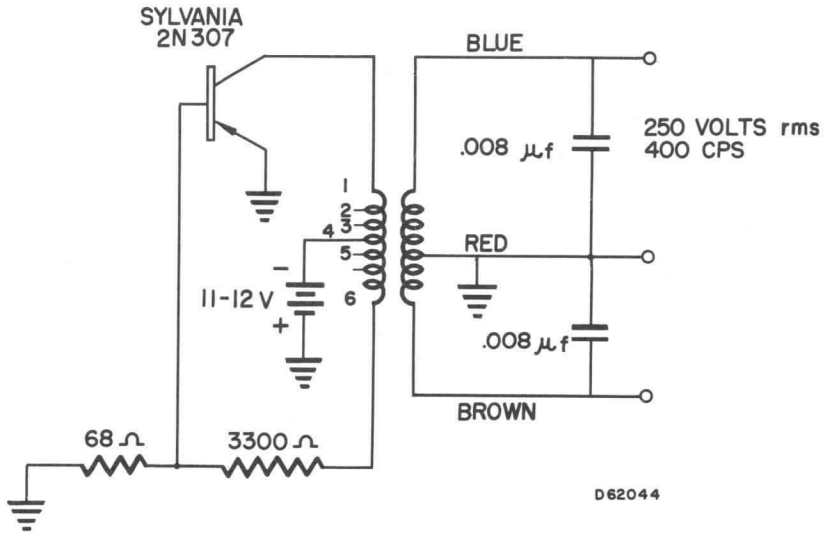

TRANSFORMER–STANCOR A-3856

MECHANICAL DATA

Construction	Glass Substrate; Neutral Density; 70 % Transmission
Dimensions	See Outline Drawing
Basing	No. 1299R Pins; K46-1101 Clips
Mounting Position	Any

MAXIMUM RATINGS

Peak Voltage	420 Volts
RMS Voltage (Sine Wave)	300 Volts
Peak Transient Voltage (Not to Exceed 0.5 Cycles at Operating Frequency)	500 Volts

TYPICAL OPERATING CONDITIONS

RMS Voltage	250 Volts
Frequency	400 cps
Power (Per Numeric)	7 mW
Current (Per Numeric)	150 μa
Power Factor	0.2
Light Output	10 Ft. Lamberts

NOTES:

1. *It is recommended that this device be operated from a minimum source impedance of 47K ohms.*
2. *All six common connector pins should be tied together.*

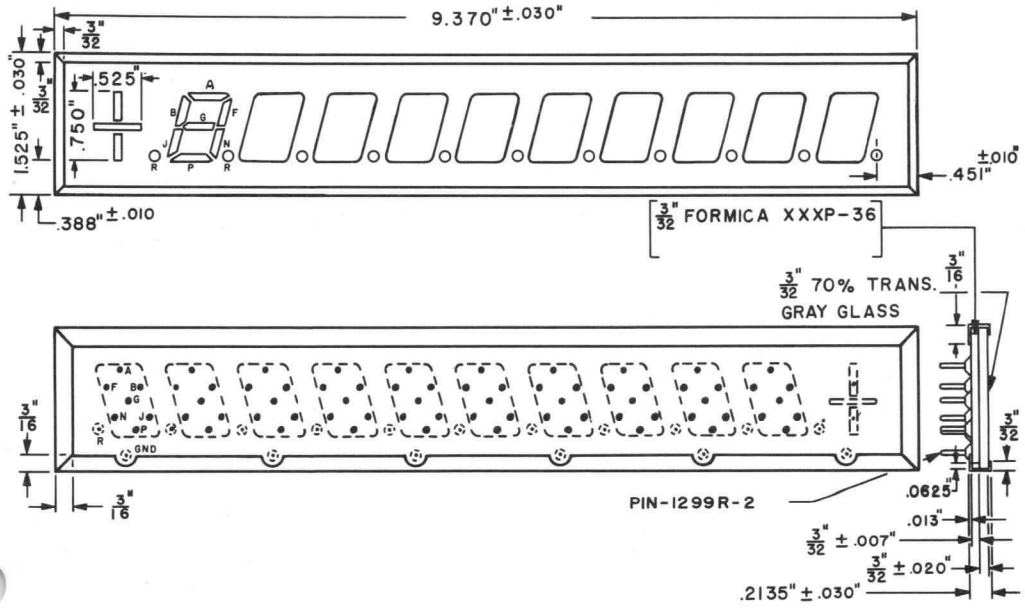

QUICK REFERENCE DATA

The Sylvania Type NU79A is an electroluminescent multi-numeric display device. It features 10 digits and a ± sign in 3/4" character size. Each of the 10 digits is capable of displaying the numbers 0 thru 9. The device features wide viewing angle, minimal catastrophic failure and very low power consumption.

SYLVANIA
ELECTRONIC TUBES
A Division of
Sylvania Electric Products Inc.
PICTURE TUBE
OPERATIONS
SENECA FALLS, NEW YORK

Prepared and Released By The
TECHNICAL PUBLICATIONS SECTION
EMPORIUM, PENNSYLVANIA
OCTOBER, 1963

File Under
ELECTROLUMINESCENT DEVICES

LIGHT OUTPUT VS. VOLTAGE AND FREQUENCY

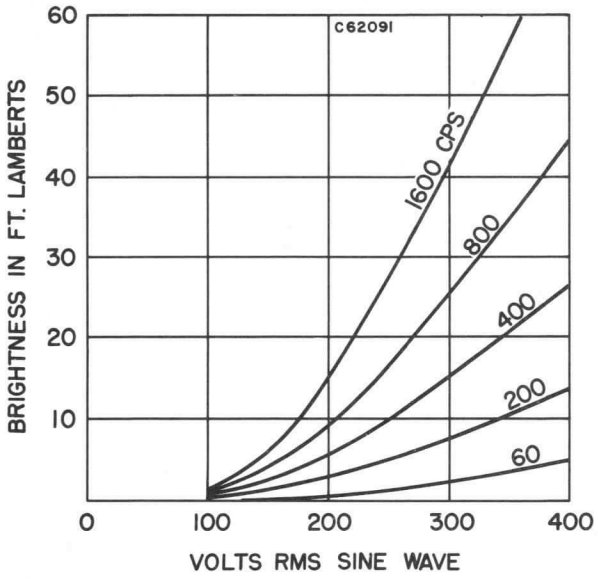

TYPICAL SPECTRAL ENERGY EMISSION CHARACTERISTICS

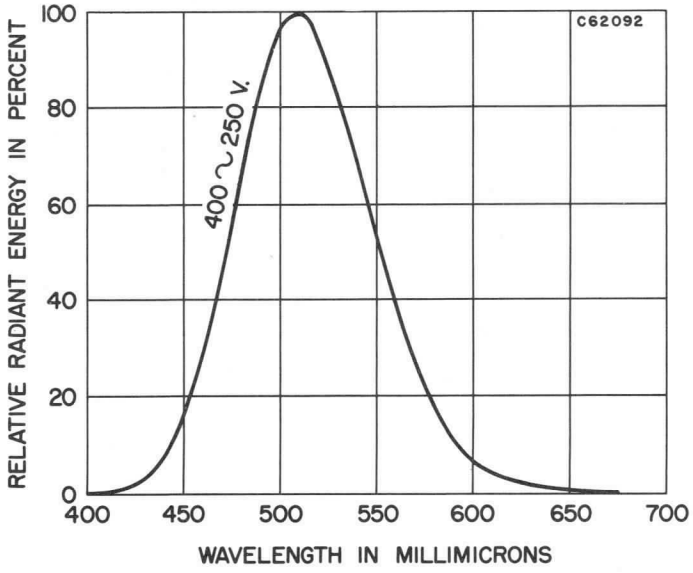

TYPICAL TRANSISTORIZED POWER SUPPLY

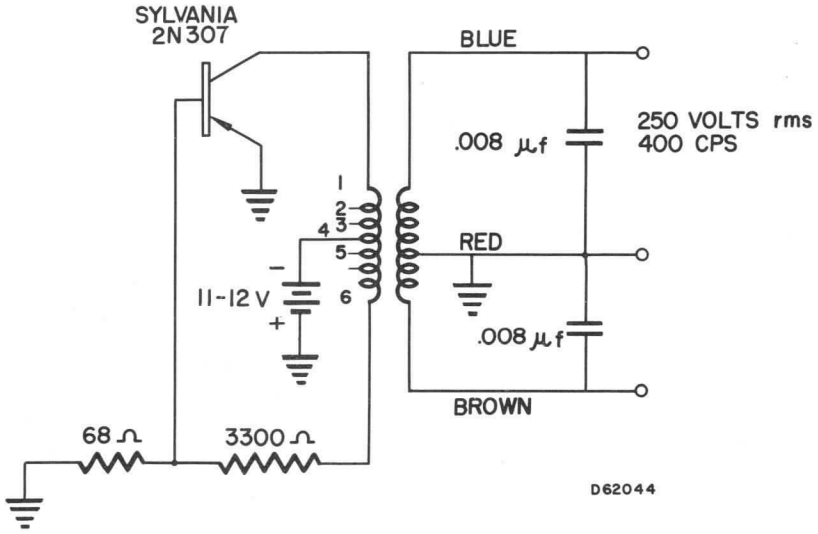

TRANSFORMER-STANCOR A-3856

MECHANICAL DATA

Construction	Glass Substrate; Neutral Density; 70 % Transmission
Dimensions	See Outline Drawing
Basing	No. 1299R Clip Pins (K46-1101 Clips)
Mounting Position	Any

MAXIMUM RATINGS

Peak Voltage	420 Volts
RMS Voltage (Sine Wave)	300 Volts
Peak Transient Voltage (Not to Exceed 0.5 Cycles at Operating Frequency)	500 Volts

TYPICAL OPERATING CONDITIONS

RMS Voltage	250 Volts
Frequency	400 cps
Power (All Segments Energized)	0.26 mW
Current (All Segments Energized)	500 μa
Power Factor	0.2
Light Output	10 Ft. Lamberts

NOTE:

1. *It is recommended that this device be operated from a minimum source impedance of 27K ohms.*

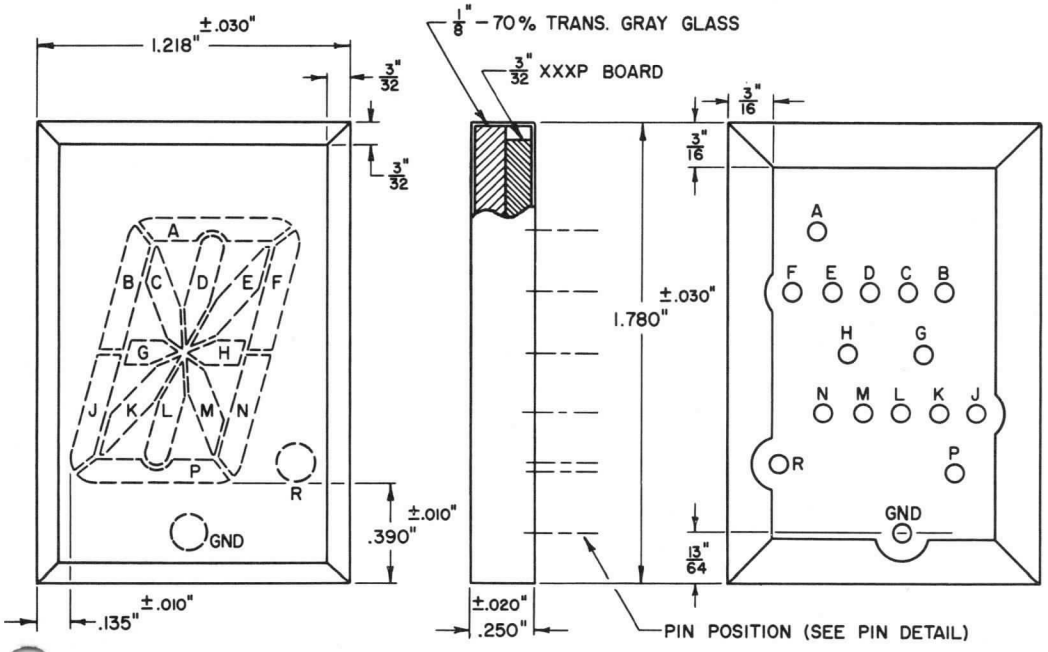

QUICK REFERENCE DATA

Electroluminescent
Alpha-Numeric Display
1 Character
14 Segment Design
0 to 9 + Decimal Point
Letters of Alphabet + Some Symbols
1" Character Height
Compact Design
Wide Angle Viewing
Parallax Free
Fast Switching Speed
Very Low Power Consumption
Minimal Catastrophic Failure

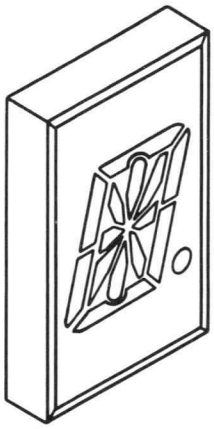

SYLVANIA
ELECTRONIC TUBES

A Division of
Sylvania Electric Products Inc.

PICTURE TUBE
OPERATIONS

SENECA FALLS, NEW YORK

Prepared and Released By The
TECHNICAL PUBLICATIONS SECTION
EMPORIUM, PENNSYLVANIA

DECEMBER, 1963

File Under
ELECTROLUMINESCENT DEVICES

PIN DETAIL

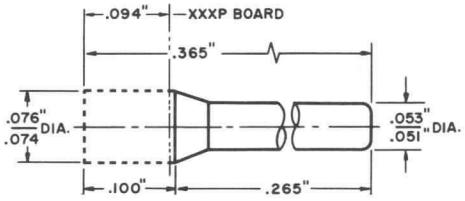

No. 1299R Clip Pin

TYPICAL TRANSISTORIZED POWER SUPPLY

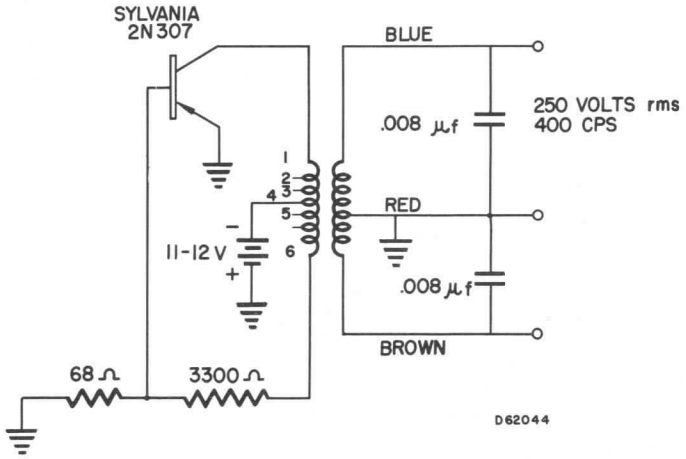

TRANSFORMER–STANCOR A-3856

LIGHT OUTPUT VS. VOLTAGE AND FREQUENCY

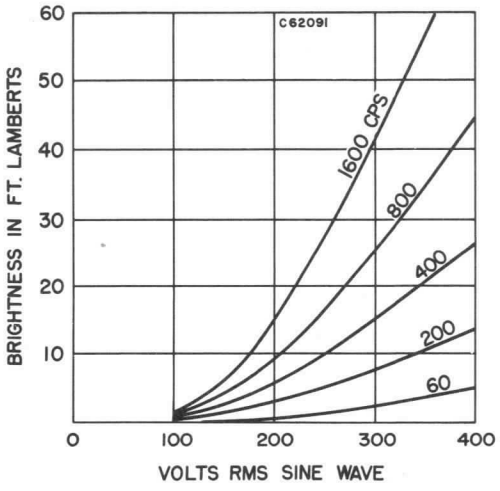

TYPICAL SPECTRAL ENERGY EMISSION CHARACTERISTICS

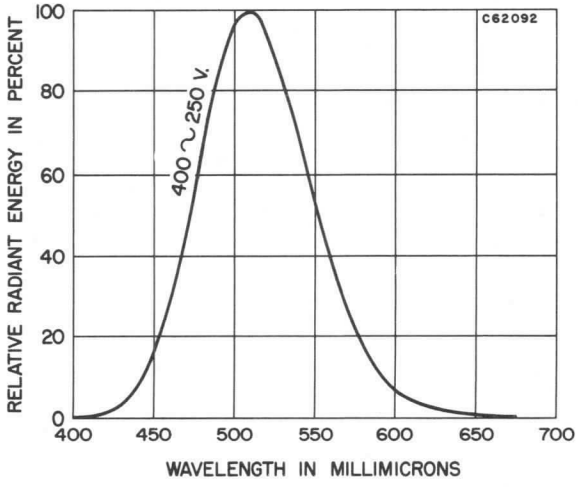

MECHANICAL DATA

Construction	Glass Substrate; Neutral Density; 70 % Transmission
Dimensions	See Outline Drawing
Basing	No. 1299R Clip Pins (K46-1101 Clips)
Mounting Position	Any

MAXIMUM RATINGS

Peak Voltage	420 Volts
RMS Voltage (Sine Wave)	300 Volts
Peak Transient Voltage (Not to Exceed 0.5 Cycles at Operating Frequency)	500 Volts

TYPICAL OPERATING CONDITIONS

RMS Voltage	250 Volts
Frequency	400 cps
Power (All Segments Energized)	15 mW
Current (All Segments Energized)	200 μa
Power Factor	0.2
Light Output	10 Ft. Lamberts

NOTE:

1. *It is recommended that this device be operated from a minimum source impedance of 27K ohms.*

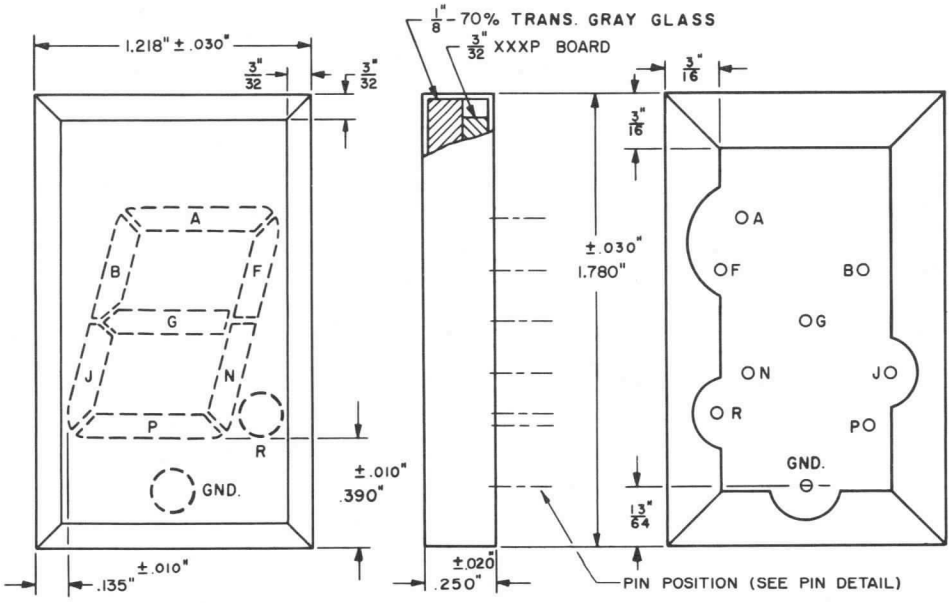

QUICK REFERENCE DATA

Electroluminescent
Numeric Display
1 Digit
7 Segment Design
0 to 9 + Decimal Point
1" Character Height
Compact Design
Wide Angle Viewing
Parallax Free
Fast Switching Speed
Very Low Power Consumption
Minimal Catastrophic Failure

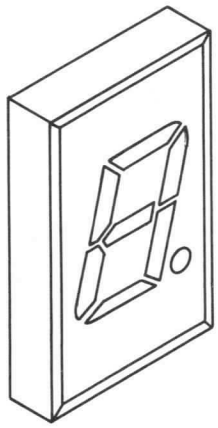

SYLVANIA
ELECTRONIC TUBES

A Division of
Sylvania Electric Products Inc.

PICTURE TUBE
OPERATIONS

SENECA FALLS, NEW YORK

Prepared and Released By The
TECHNICAL PUBLICATIONS SECTION
EMPORIUM, PENNSYLVANIA

DECEMBER, 1963

File Under

ELECTROLUMINESCENT DEVICES

PIN DETAIL

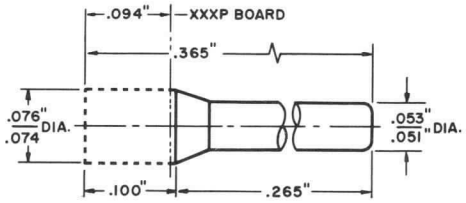

No. 1299R Clip Pin

TYPICAL TRANSISTORIZED POWER SUPPLY

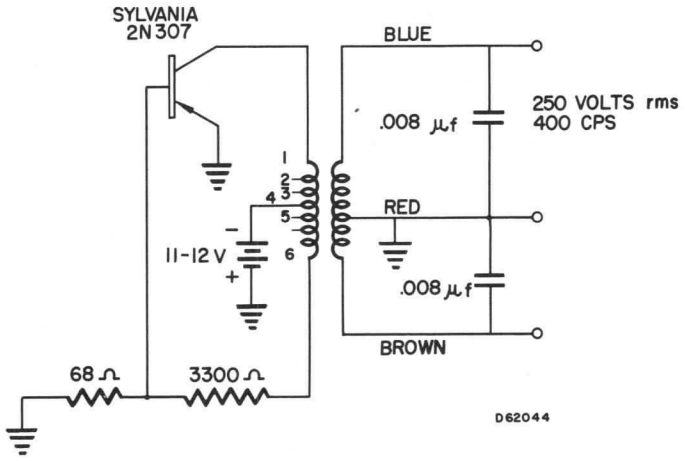

TRANSFORMER-STANCOR A-3856

LIGHT OUTPUT VS. VOLTAGE AND FREQUENCY

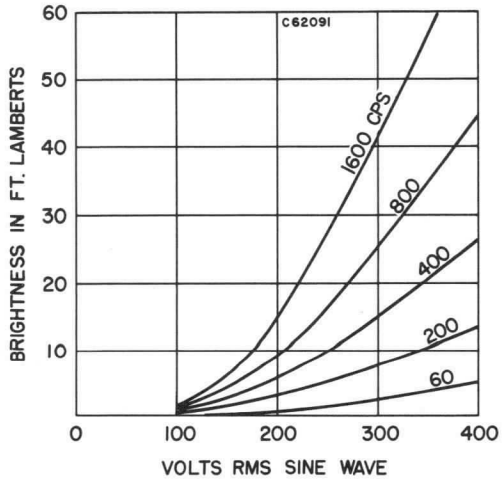

TYPICAL SPECTRAL ENERGY EMISSION CHARACTERISTICS

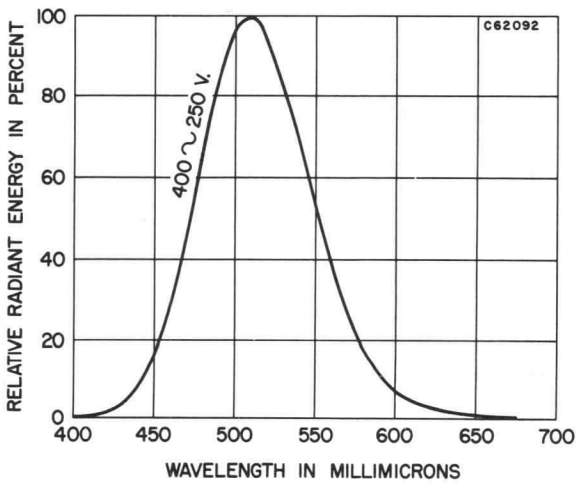

MECHANICAL DATA

Construction	Glass Substrate; Neutral Density; 70 % Transmission
Dimensions	See Outline Drawing
Basing	No. 1299R Pins; K46-1101 Clips
Mounting Position	Any

MAXIMUM RATINGS

Peak Voltage	420 Volts
RMS Voltage (Sine Wave)	300 Volts
Peak Transient Voltage (Not to Exceed 0.5 Cycles at Operating Frequency)	500 Volts

TYPICAL OPERATING CONDITIONS

RMS Voltage	250 Volts
Frequency	400 cps
Power (Per Numeric)	15 mW
Current (Per Numeric)	200 μa
Power Factor	0.2
Light Output	10 Ft. Lamberts

NOTES:

1. *It is recommended that this device be operated from a minimum source impedance of 33K ohms.*
2. *The two common connector pins should be tied together.*

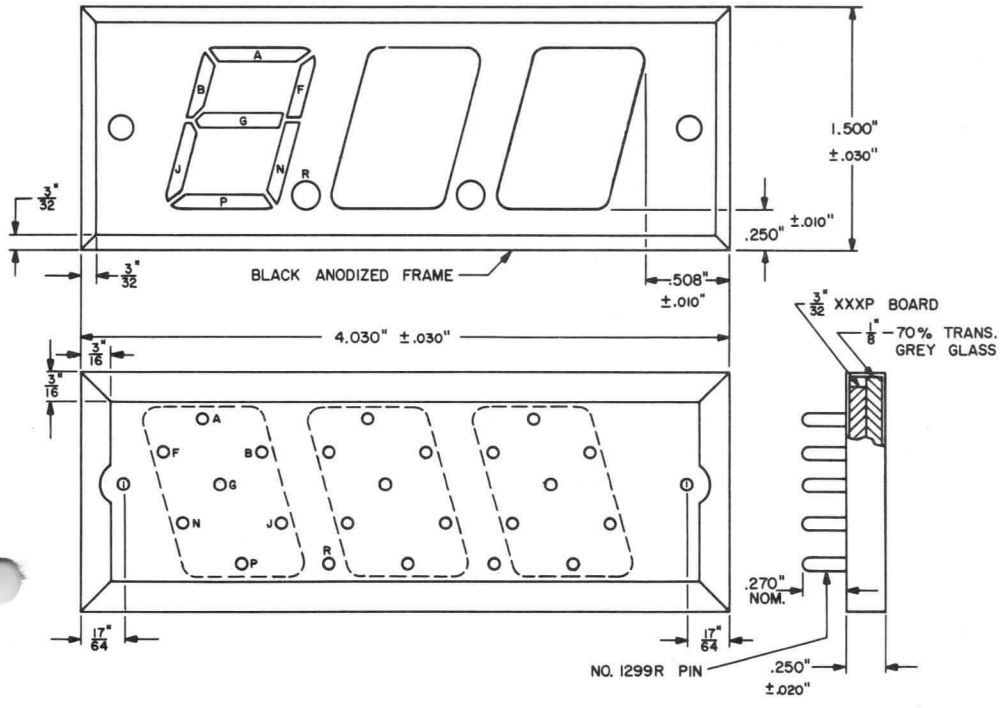

QUICK REFERENCE DATA

The Sylvania Type NU-103A is an electroluminescent numeric display device featuring 1.0″ characters. Each of the 3 digits is capable of displaying the numbers 0 thru 9. The device features wide viewing angle, very low power consumption, and minimal catastrophic failure.

SYLVANIA
ELECTRONIC TUBES

A Division of
Sylvania Electric Products Inc.

PICTURE TUBE
OPERATIONS

SENECA FALLS, NEW YORK

Prepared and Released By The
TECHNICAL PUBLICATIONS SECTION
EMPORIUM, PENNSYLVANIA

JUNE, 1963

File Under
ELECTROLUMINESCENT DEVICES

LIGHT OUTPUT VS. VOLTAGE AND FREQUENCY

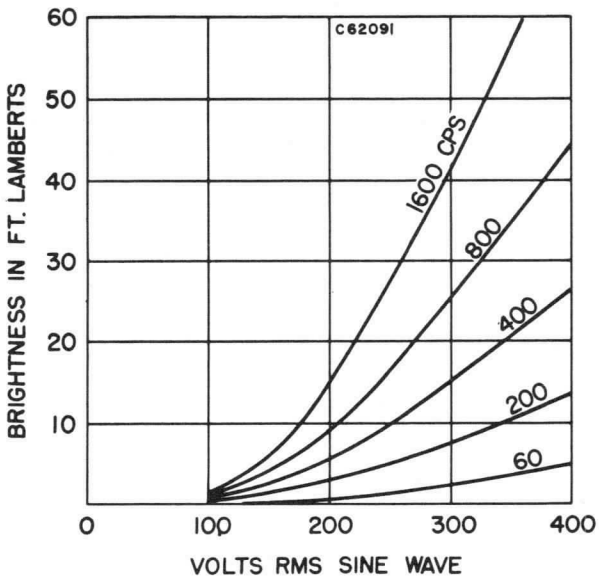

TYPICAL SPECTRAL ENERGY EMISSION CHARACTERISTICS

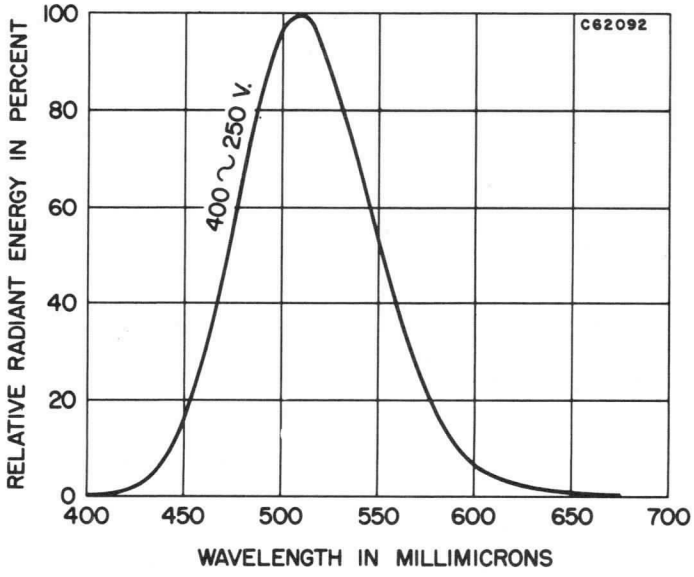

TYPICAL TRANSISTORIZED POWER SUPPLY

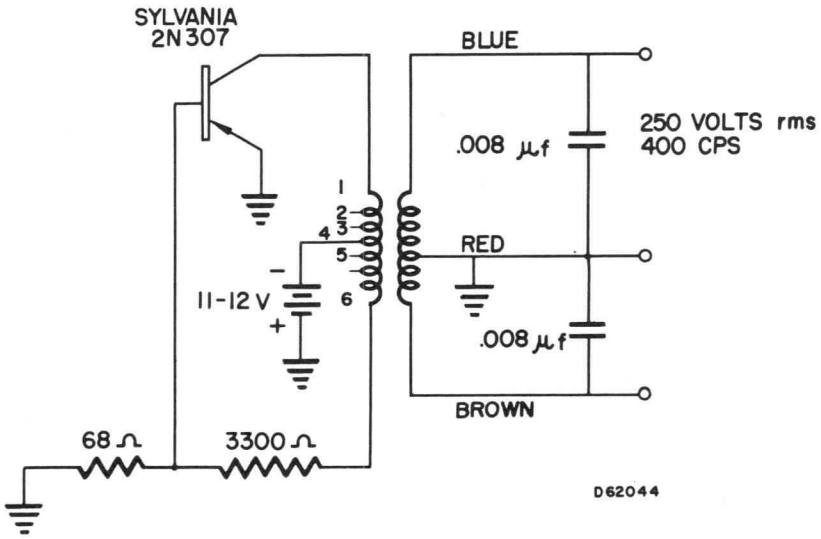

TRANSFORMER-STANCOR A-3856

MECHANICAL DATA

Construction	Glass Substrate; Neutral Density; 70 % Transmission
Dimensions	See Outline Drawing
Basing	No. 1299R Pins; K46-1101 Clips
Mounting Position	Any

MAXIMUM RATINGS

Peak Voltage	420 Volts
RMS Voltage (Sine Wave)	300 Volts
Peak Transient Voltage (Not to Exceed 0.5 Cycles at Operating Frequency)	500 Volts

TYPICAL OPERATING CONDITIONS

RMS Voltage	250 Volts
Frequency	400 cps
Power (Per Numeric)	15 mW
Current (Per Numeric)	200 μa
Power Factor	0.2
Light Output	10 Ft. Lamberts

NOTES:

1. *It is recommended that this device be operated from a minimum source impedance of 27K ohms.*
2. *The two common connector pins should be tied together.*

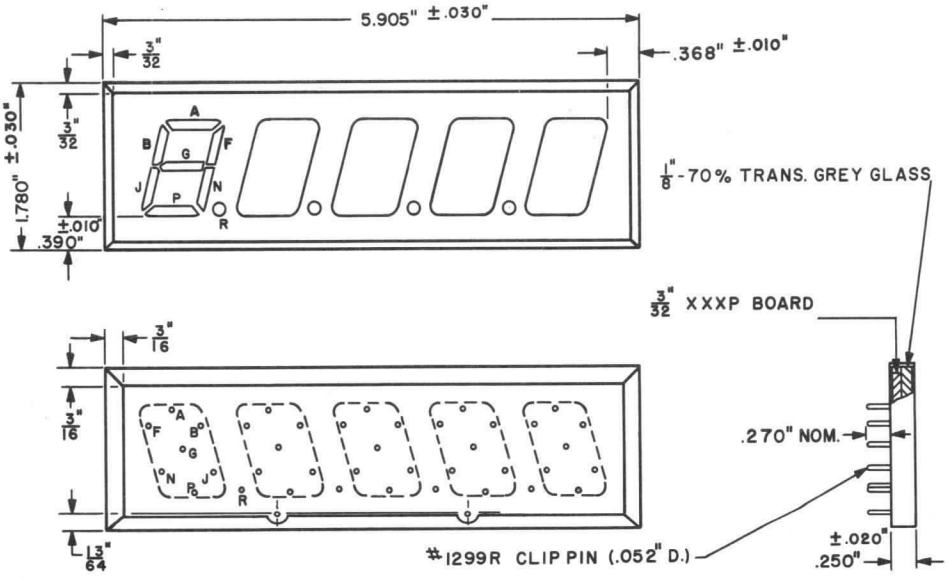

QUICK REFERENCE DATA

The Sylvania Type NU105 is an electroluminescent numeric display device featuring 1″ characters. Each of the 5 digits is capable of displaying the numbers 0 thru 9. The device features wide viewing angle and very low power consumption.

SYLVANIA
ELECTRONIC TUBES

A Division of
Sylvania Electric Products Inc.

PICTURE TUBE
OPERATIONS

SENECA FALLS, NEW YORK

Prepared and Released By The
TECHNICAL PUBLICATIONS SECTION
EMPORIUM, PENNSYLVANIA

MARCH, 1963

File Under
ELECTROLUMINESCENT DEVICES

LIGHT OUTPUT VS. VOLTAGE AND FREQUENCY

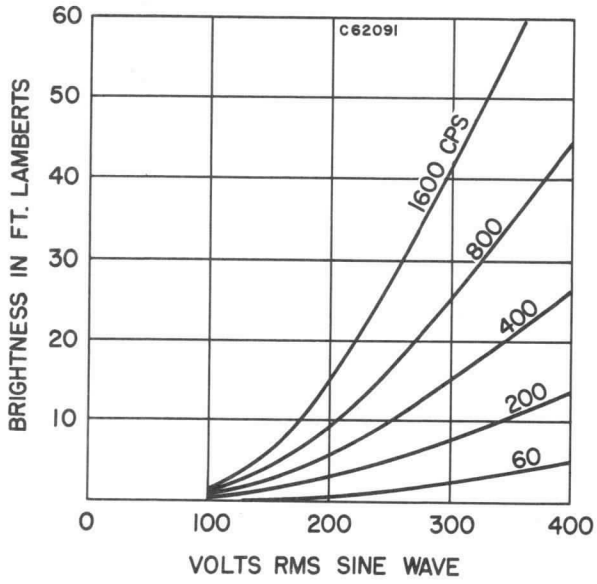

TYPICAL SPECTRAL ENERGY EMISSION CHARACTERISTICS

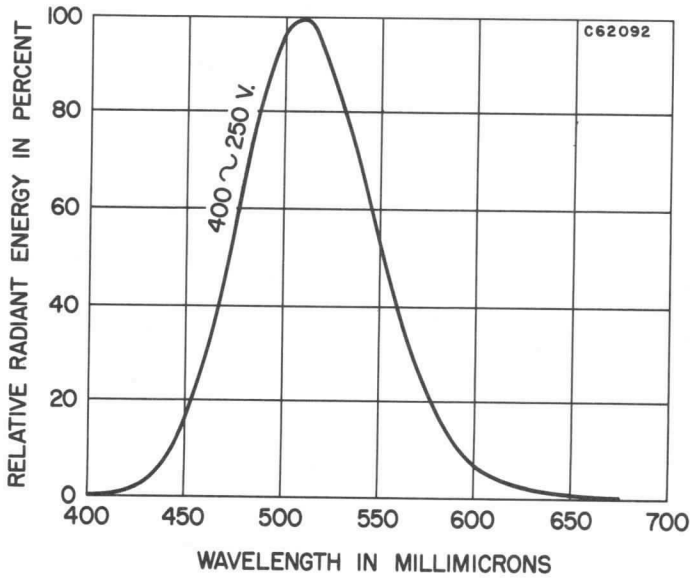

TYPICAL TRANSISTORIZED POWER SUPPLY

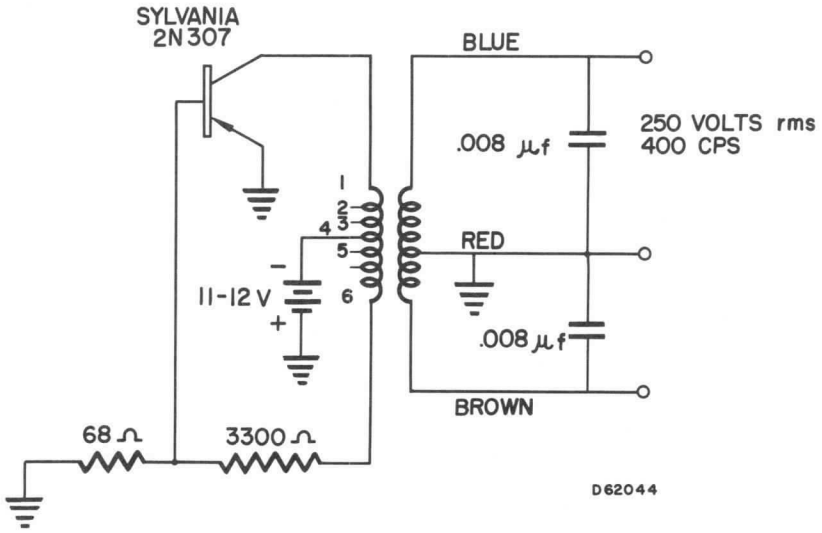

TRANSFORMER-STANCOR A-3856

MECHANICAL DATA

Construction	Glass Substrate; Neutral Density; 70 % Transmission
Dimensions	See Outline Drawing
Basing	No. 1299R Pins; K46-1101 Clips
Mounting Position	Any

MAXIMUM RATINGS

Peak Voltage	420 Volts
RMS Voltage (Sine Wave)	300 Volts
Peak Transient Voltage (Not to Exceed 0.5 Cycles at Operating Frequency)	500 Volts

TYPICAL OPERATING CONDITIONS

RMS Voltage	250 Volts
Frequency	400 cps
Power (Per Numeric)	15 mW
Current (Per Numeric)	200 μa
Power Factor	0.2
Light Output	10 Ft. Lamberts

NOTES:

1. *It is recommended that this device be operated from a minimum source impedance of 22K ohms.*
2. *All three common connector pins should be tied together.*

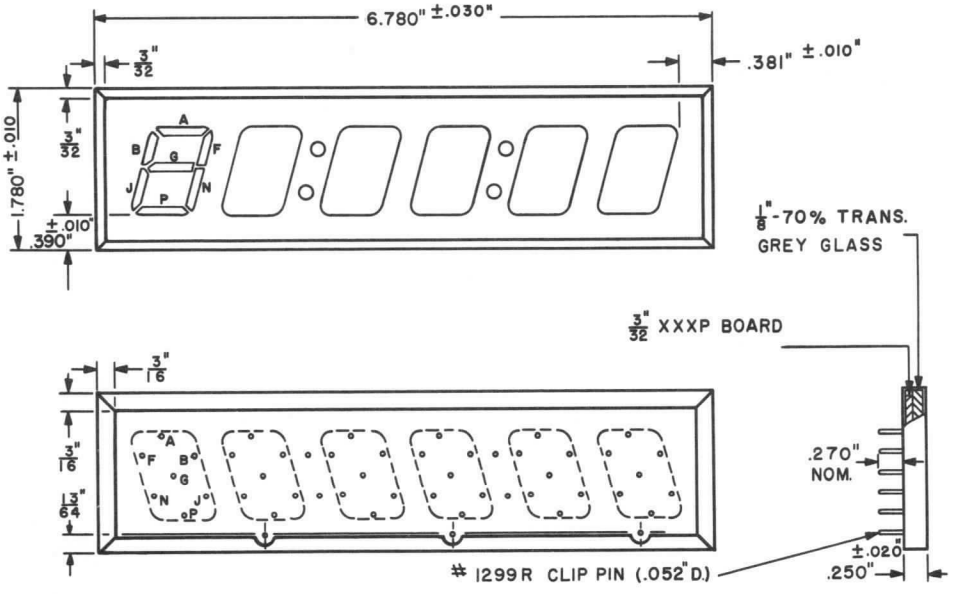

QUICK REFERENCE DATA

The Sylvania Type NU106B is designed for application as a 24-hour clock display. It features 1″ characters each of which is capable of displaying the numbers 0 thru 9. The device features wide viewing angle and very low power consumption.

SYLVANIA
ELECTRONIC TUBES

A Division of
Sylvania Electric Products Inc.

PICTURE TUBE
OPERATIONS

SENECA FALLS, NEW YORK

Prepared and Released By The
TECHNICAL PUBLICATIONS SECTION
EMPORIUM, PENNSYLVANIA

MARCH, 1963

File Under
ELECTROLUMINESCENT DEVICES

LIGHT OUTPUT VS. VOLTAGE AND FREQUENCY

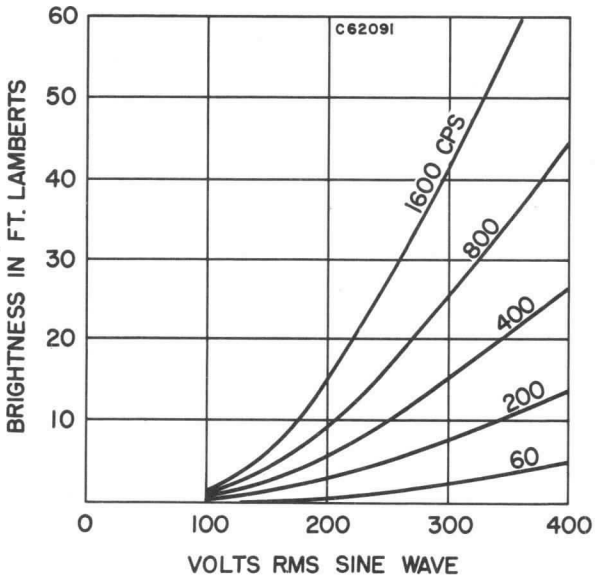

TYPICAL SPECTRAL ENERGY EMISSION CHARACTERISTICS

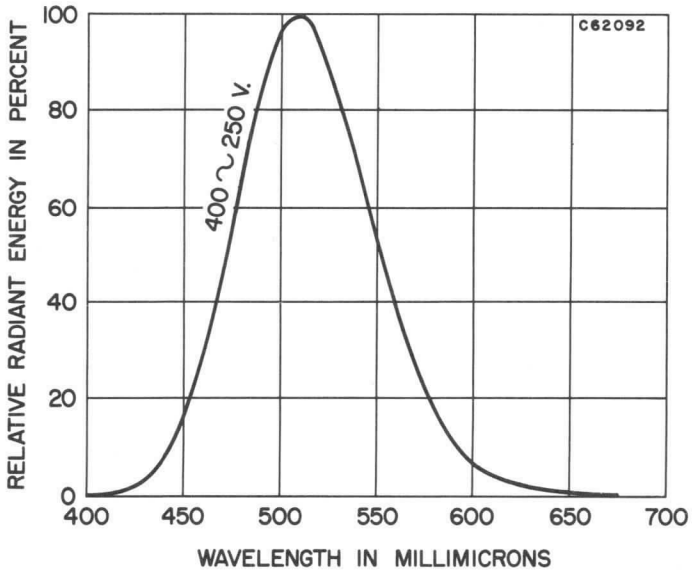

TYPICAL TRANSISTORIZED POWER SUPPLY

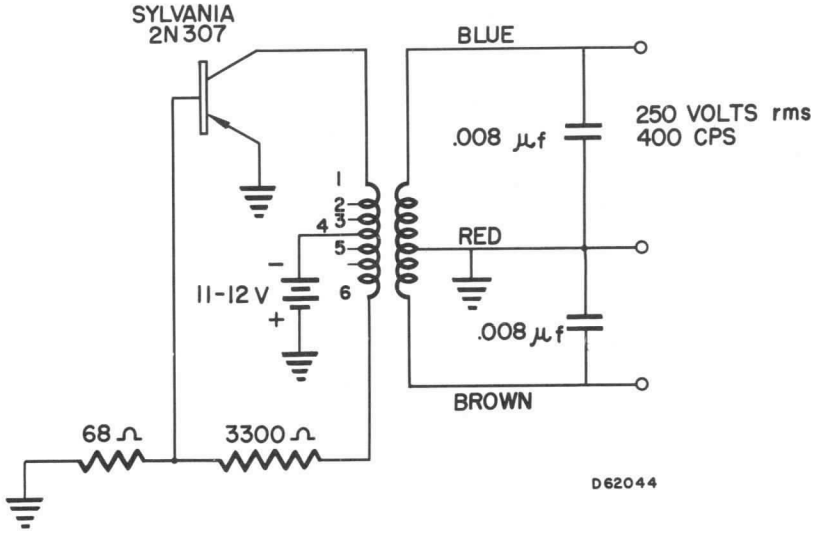

TRANSFORMER – STANCOR A-3856

MECHANICAL DATA

Construction	Glass Substrate; Neutral Density; 70 % Transmission
Dimensions	See Outline Drawing
Basing	No. 1299R Pins; K46-1101 Clips
Mounting Position	Any

MAXIMUM RATINGS

Peak Voltage	420 Volts
RMS Voltage (Sine Wave)	300 Volts
Peak Transient Voltage (Not to Exceed 0.5 Cycles at Operating Frequency)	500 Volts

TYPICAL OPERATING CONDITIONS

RMS Voltage	250 Volts
Frequency	400 cps
Power (Per Numeric)	15 mW
Current (Per Numeric)	250 μa
Power Factor	0.2
Light Output	10 Ft. Lamberts

NOTES:

1. *It is recommended that this device be operated from a minimum source impedance of 10K ohms.*
2. *All five common connector pins should be tied together.*

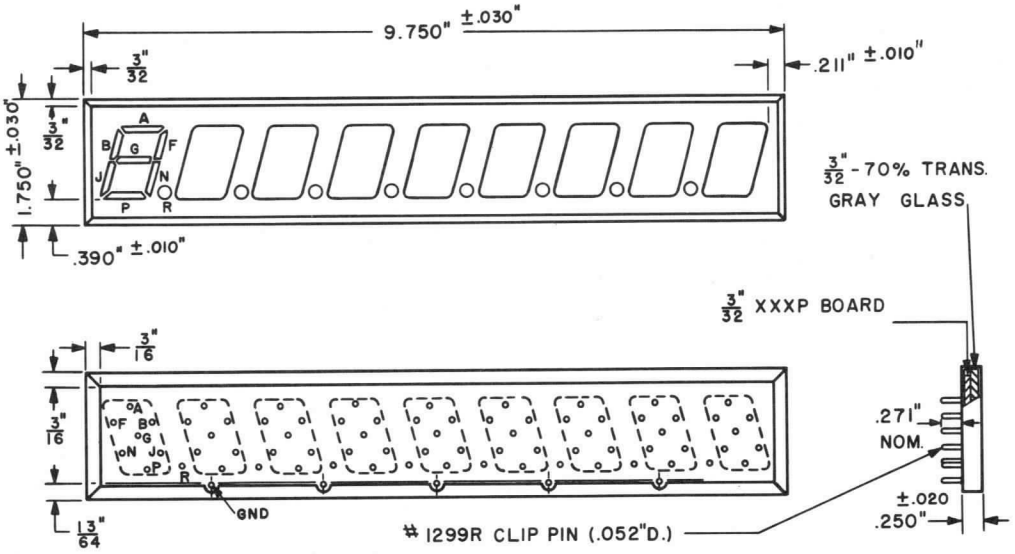

QUICK REFERENCE DATA

The Sylvania Type NU109 is an electroluminescent numeric display device featuring 1″ characters. Each of the 9 digits is capable of displaying the numbers 0 thru 9. The device features wide viewing angle and very low power consumption.

SYLVANIA
ELECTRONIC TUBES

A Division of
Sylvania Electric Products Inc.

PICTURE TUBE
OPERATIONS

SENECA FALLS, NEW YORK

Prepared and Released By The
TECHNICAL PUBLICATIONS SECTION
EMPORIUM, PENNSYLVANIA
SEPTEMBER, 1962

File Under
ELECTROLUMINESCENT DEVICES

LIGHT OUTPUT VS. VOLTAGE AND FREQUENCY

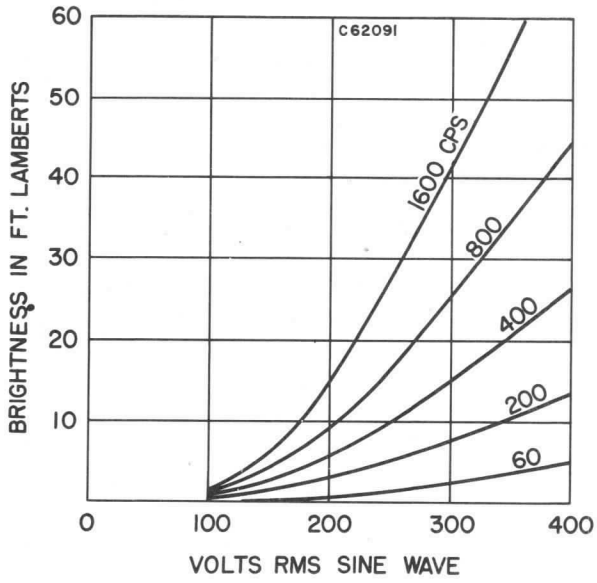

TYPICAL SPECTRAL ENERGY EMISSION CHARACTERISTICS

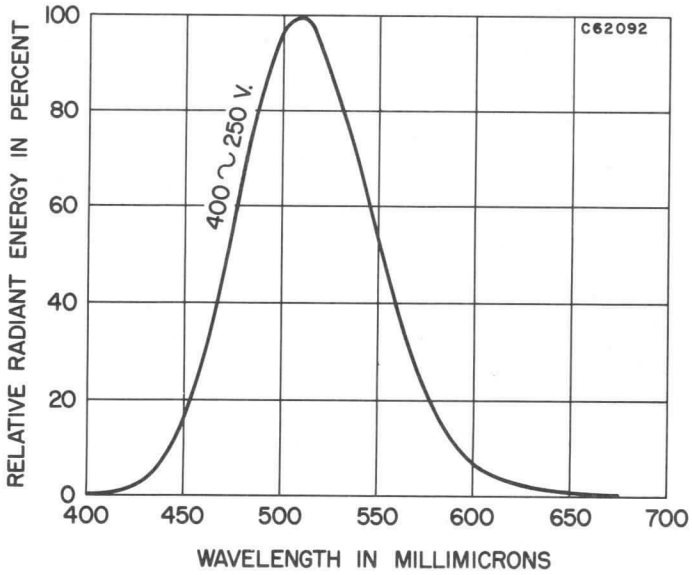

TYPICAL TRANSISTORIZED POWER SUPPLY

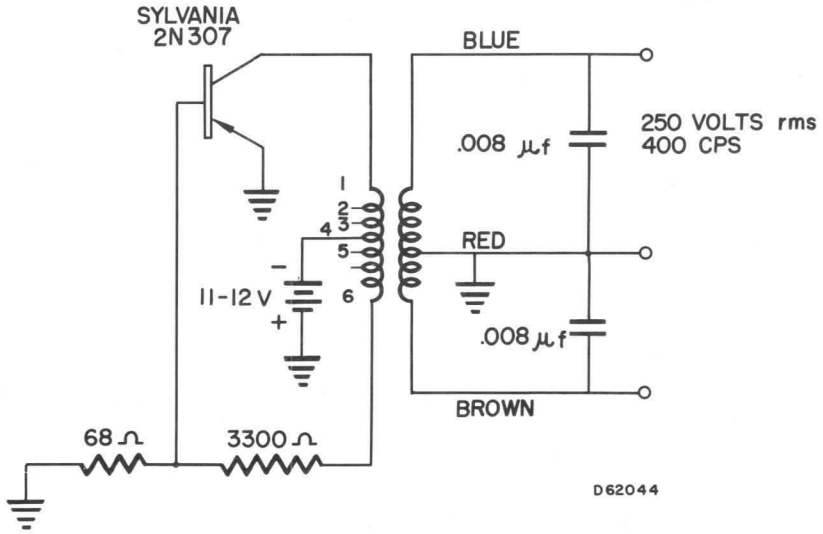

TRANSFORMER-STANCOR A-3856

MECHANICAL DATA

Construction	Glass Substrate; Neutral Density; 70 % Transmission
Dimensions	See Outline Drawing
Basing	No. 1299R Pins; K46-1101 Clips
Mounting Position	Any

MAXIMUM RATINGS

Peak Voltage	420 Volts
RMS Voltage (Sine Wave)	300 Volts
Peak Transient Voltage (Not to Exceed 0.5 Cycles at Operating Frequency)	500 Volts

TYPICAL OPERATING CONDITIONS

RMS Voltage	250 Volts
Frequency	400 cps
Power (All Segments Energized)	35 mW
Current (All Segments Energized)	700 μa
Power Factor	0.2
Light Output	10 Ft. Lamberts

NOTE:

1. *It is recommended that this device be operated from a minimum source impedance of 33K ohms.*

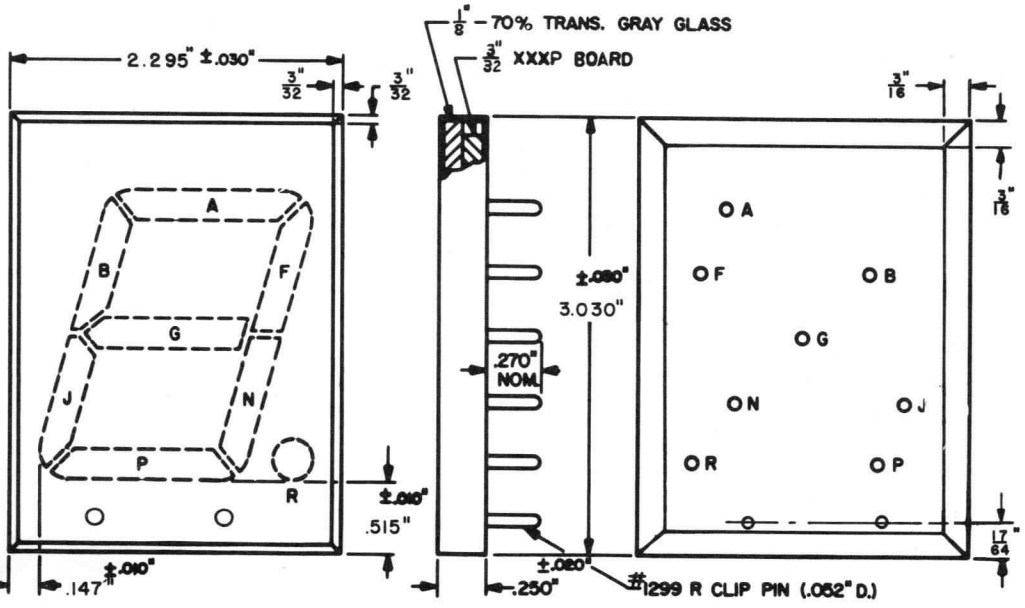

QUICK REFERENCE DATA

The Sylvania Type NU-201 is an electroluminescent numeric display device. It features 7 segments, plus a decimal point, in a character height of 2″. Combinations of segments may be lighted to form all the numbers from 0 thru 9. The device features wide viewing angle, minimal catastrophic failure and very low power consumption.

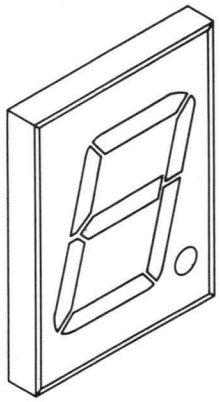

SYLVANIA
ELECTRONIC TUBES

A Division of
Sylvania Electric Products Inc.

PICTURE TUBE
OPERATIONS

SENECA FALLS, NEW YORK

Prepared and Released By The
TECHNICAL PUBLICATIONS SECTION
EMPORIUM, PENNSYLVANIA

JUNE, 1963

File Under

ELECTROLUMINESCENT DEVICES

LIGHT OUTPUT VS. VOLTAGE AND FREQUENCY

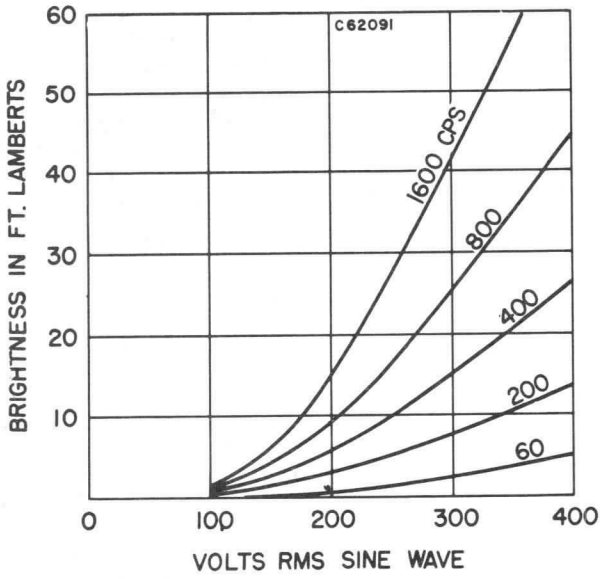

TYPICAL SPECTRAL ENERGY EMISSION CHARACTERISTICS

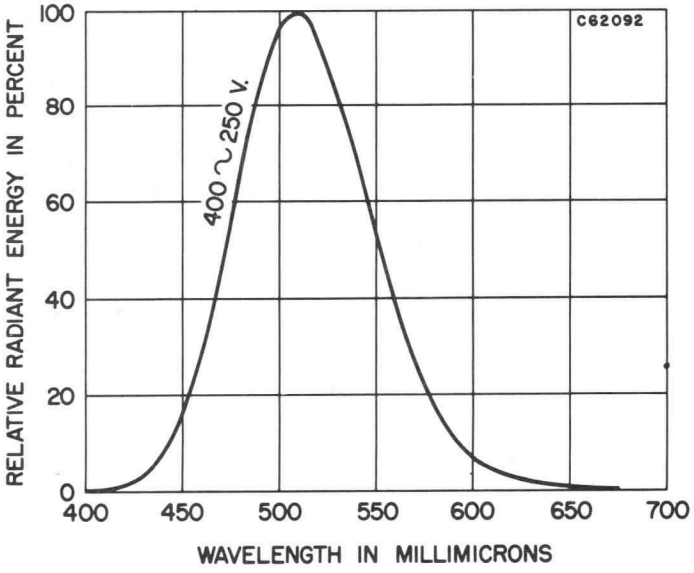

TYPICAL TRANSISTORIZED POWER SUPPLY

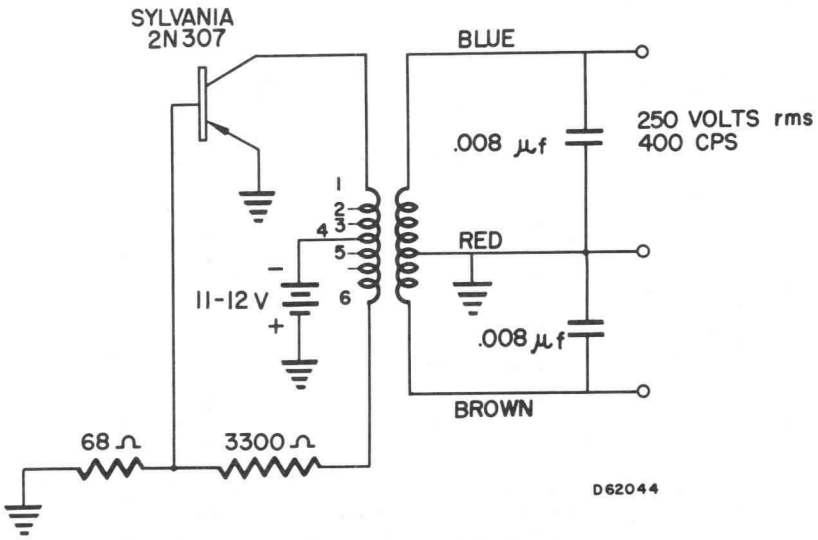

TRANSFORMER – STANCOR A-3856

DESCRIPTION

The SD150 combines an incandescent lamp and a photoconductor into a gating device designed to operate in conjunction with the SD176 translator. It accepts low voltage DC logic levels and gates high voltage AC to the electroluminescent lamps.

MECHANICAL DATA

Outside Diameter	0.1 Inch
Weight (Approx.)	0.01 Gram
Leads	
Lamp (.003 Dia. Platinum)	3/8 Inch
Photoconductor (.003 Dia. Nickel)	3/4 Inch

RATINGS (Absolute Maximum Values) (25°C)

Breakdown Voltage (with EL Lamp in Series)	700 Volts P-P
Incandescent Lamp Current	7 Ma
Incandescent Lamp Voltage	1.4 Volts

TYPICAL OPERATING CONDITIONS

Incandescent Lamp Current	5.5 Ma
Incandescent Lamp Voltage	1.0 Volt
Photoconductor Dark Impedance	10 Megohms
Photoconductor Light Impedance	5000 Ohms

OUTLINE—SD150

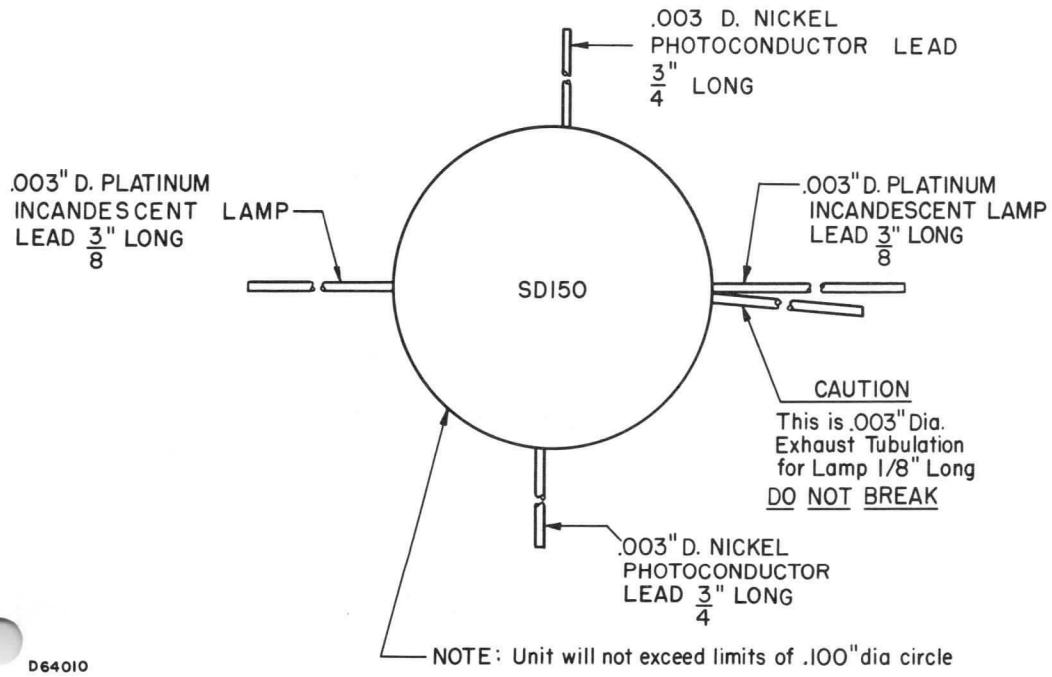

D64010

QUICK REFERENCE DATA

DC to AC Gate
Low Power
Small Size
Light Weight

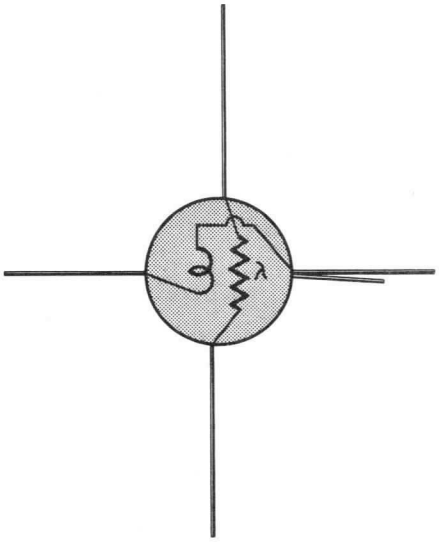

LEADS
Lamp—Platinum
Photoconductor—Nickel

SYLVANIA ELECTRIC PRODUCTS INC.

Electronic Components Group
ELECTRONIC TUBE DIVISION
SENECA FALLS, NEW YORK

A Technical Publication

MAY, 1964

File Under

ELECTROLUMINESCENT DEVICES

LIGHT RESISTANCE—TYPE SD150

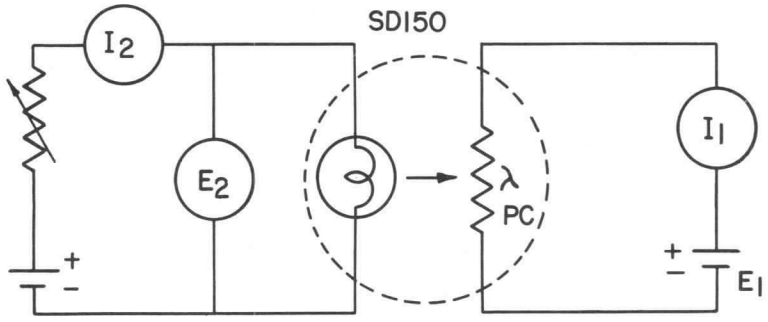

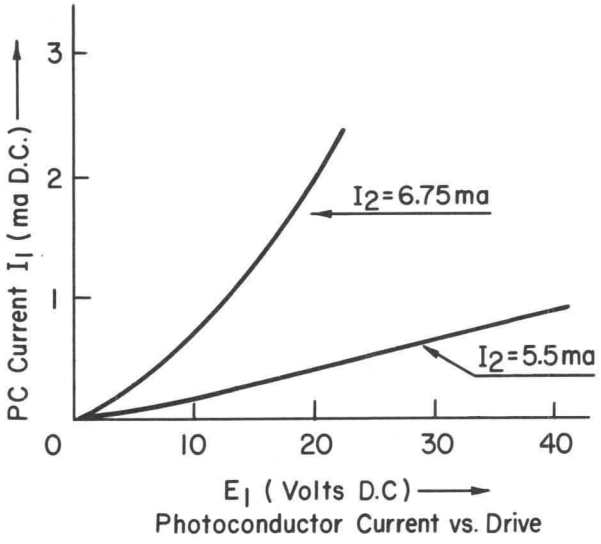

Photoconductor Current vs. Drive

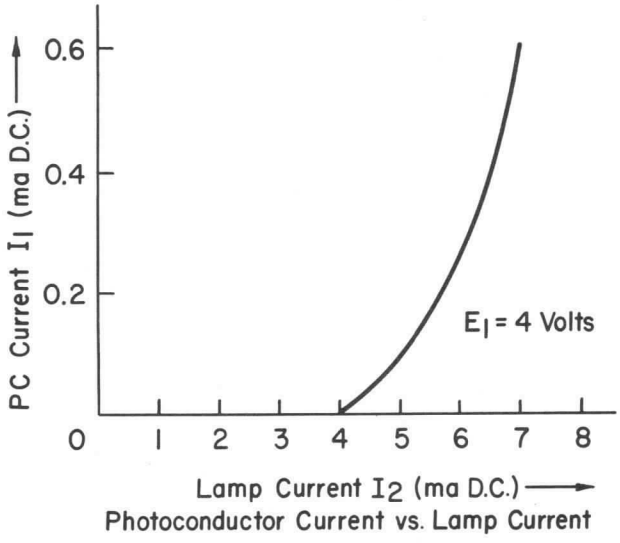

Photoconductor Current vs. Lamp Current

MECHANICAL DATA

Construction	Glass Substrate; Neutral Density; 70 % Transmission
Dimensions	See Outline Drawing
Basing	No. 1299R Pins; K46-1101 Clips
Mounting Position	Any

MAXIMUM RATINGS

Peak Voltage	420 Volts
RMS Voltage (Sine Wave)	300 Volts
Peak Transient Voltage (Not to Exceed 0.5 Cycles at Operating Frequency)	500 Volts

TYPICAL OPERATING CONDITIONS

RMS Voltage	250 Volts
Frequency	400 cps
Power (All Segments Energized)	20 mW
Current (All Segments Energized)	375 μa
Power Factor	0.2
Light Output	10 Ft. Lamberts

NOTE:

1. *It is recommended that this device be operated from a minimum source impedance of 10K ohms.*

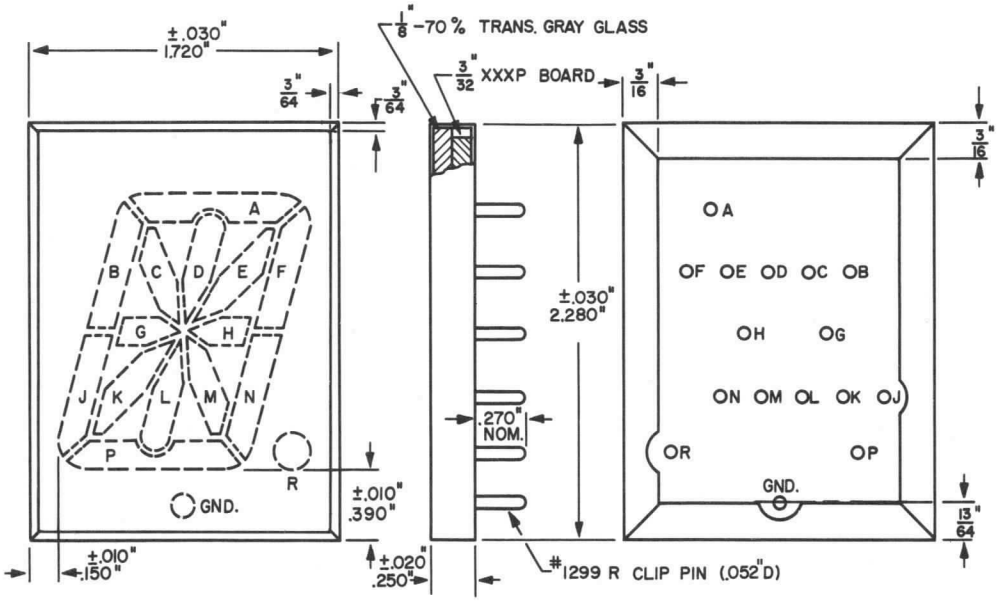

QUICK REFERENCE DATA

The Sylvania Type AN151 is an electroluminescent alpha-numeric display device. It features 14 segments in a character height of 1½". Combinations of segments may be lighted to form all letters in the alphabet as well as the numbers 0 thru 9 and some symbols. The device features wide viewing angle, minimal catastrophic failure and extremely low power consumption.

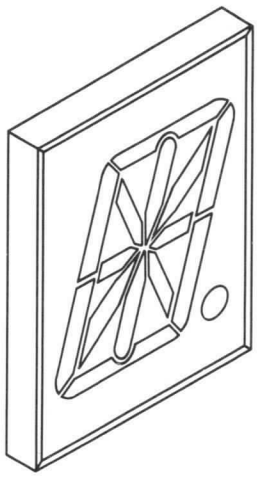

SYLVANIA
ELECTRONIC TUBES

A Division of
Sylvania Electric Products Inc.

PICTURE TUBE
OPERATIONS

SENECA FALLS, NEW YORK

Prepared and Released By The
TECHNICAL PUBLICATIONS SECTION
EMPORIUM, PENNSYLVANIA
MARCH, 1963

File Under
ELECTROLUMINESCENT DEVICES

LIGHT OUTPUT VS. VOLTAGE AND FREQUENCY

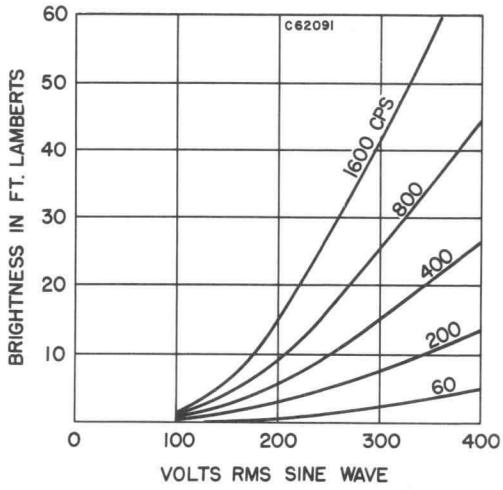

AVERAGE SEGMENT IMPEDANCE VS. VOLTAGE AND FREQUENCY

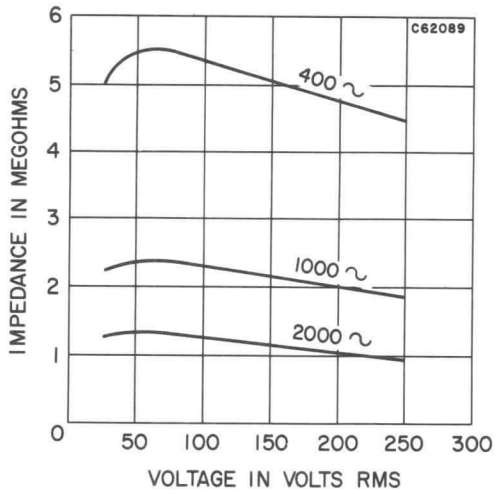

CURRENT VS. FREQUENCY DATA SHOWN FOR AVERAGE SEGMENT AT 220 VOLTS RMS

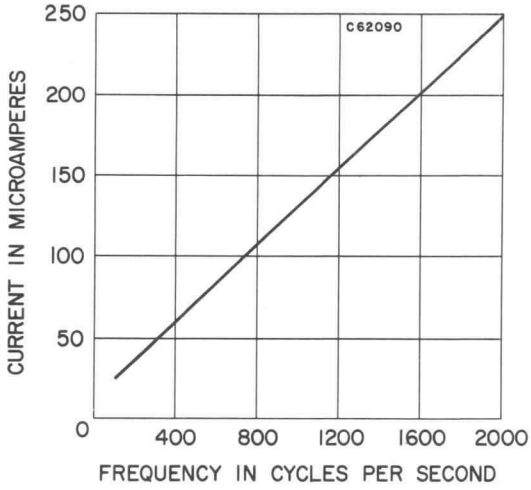

POWER VS. FREQUENCY DATA SHOWN FOR AVERAGE SEGMENT AT 220 VOLTS RMS

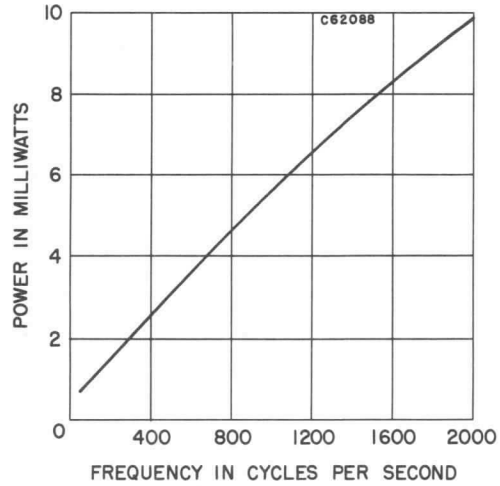

TYPICAL SPECTRAL ENERGY EMISSION CHARACTERISTICS

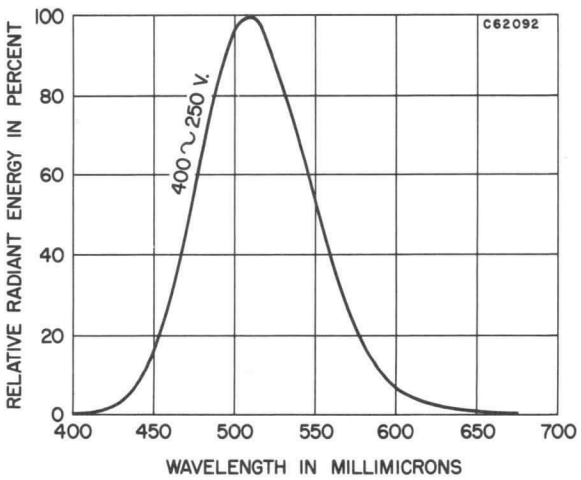

TYPICAL TRANSISTORIZED POWER SUPPLY

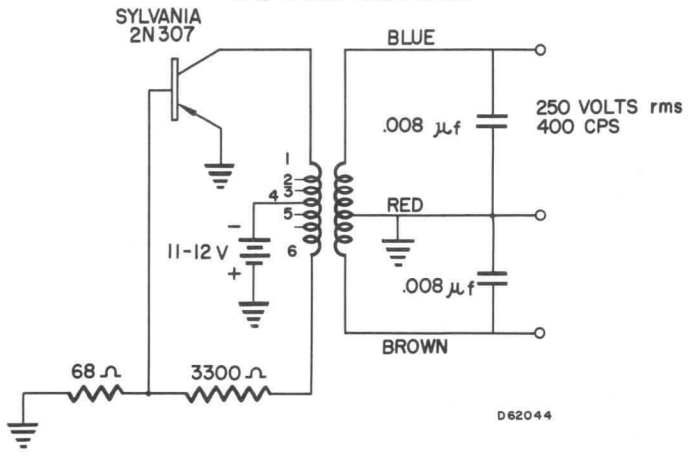

TRANSFORMER – STANCOR A-3856

MECHANICAL DATA

Construction	Glass Substrate; Neutral Density; 70 % Transmission
Dimensions	See Outline Drawing
Basing	No. 1299R Pins; K46-1101 Clips
Mounting Position	Any

MAXIMUM RATINGS

Peak Voltage	420 Volts
RMS Voltage (Sine Wave)	300 Volts
Peak Transient Voltage (Not to Exceed 0.5 Cycles at Operating Frequency)	500 Volts

TYPICAL OPERATING CONDITIONS

RMS Voltage	250 Volts
Frequency	400 cps
Power (All Segments Energized)	12 mW
Current (All Segments Energized)	250 μa
Power Factor	0.2
Light Output	10 Ft. Lamberts

NOTE:

1. *It is recommended that this device be operated from a minimum source impedance of 10K ohms.*

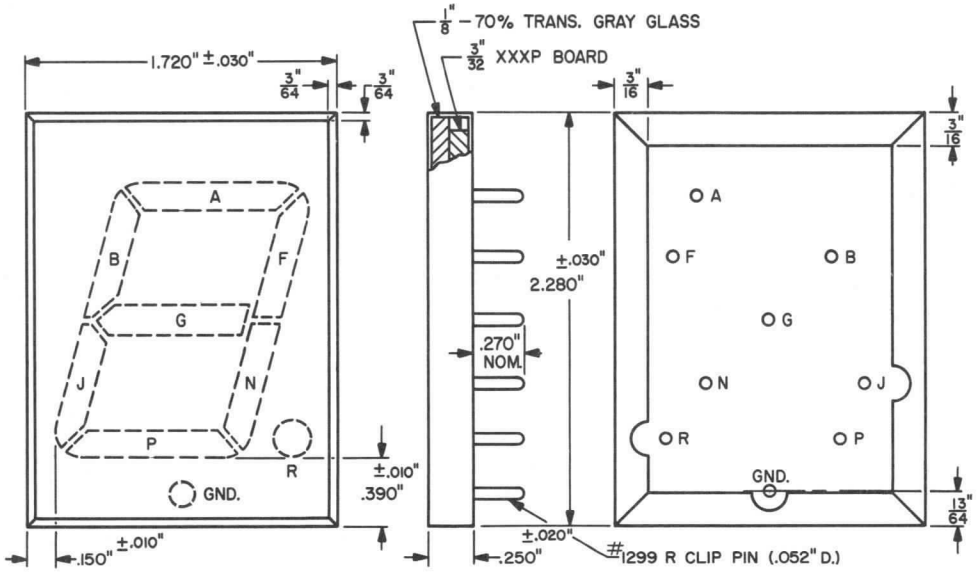

QUICK REFERENCE DATA

The Sylvania Type NU151 is an electroluminescent numeric display device. It features 7 segments, plus a decimal point, in a character height of 1½". Combinations of segments may be lighted to form all the numbers from 0 thru 9 in addition to some symbols. The device features wide viewing angle, minimal catastrophic failure and very low power consumption.

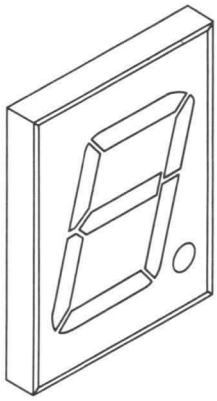

SYLVANIA
ELECTRONIC TUBES

A Division of
Sylvania Electric Products Inc.

PICTURE TUBE
OPERATIONS

SENECA FALLS, NEW YORK

Prepared and Released By The
TECHNICAL PUBLICATIONS SECTION
EMPORIUM, PENNSYLVANIA

MARCH, 1963

File Under
ELECTROLUMINESCENT DEVICES

LIGHT OUTPUT VS. VOLTAGE AND FREQUENCY

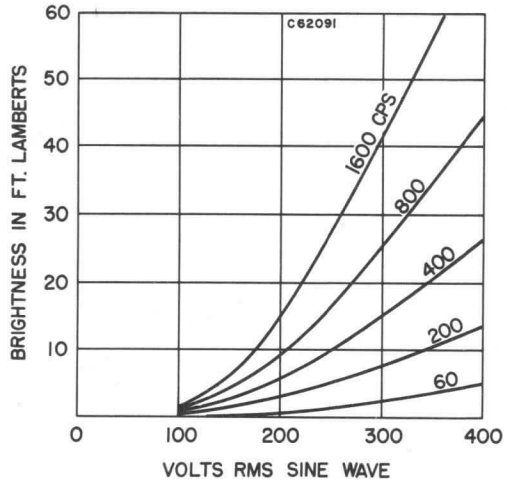

AVERAGE SEGMENT IMPEDANCE VS. VOLTAGE AND FREQUENCY

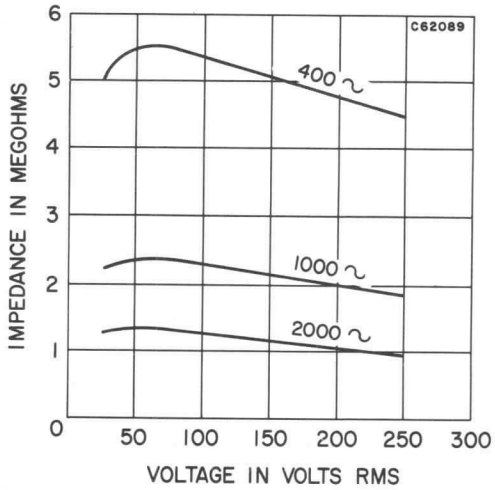

CURRENT VS. FREQUENCY DATA SHOWN FOR AVERAGE SEGMENT AT 220 VOLTS RMS

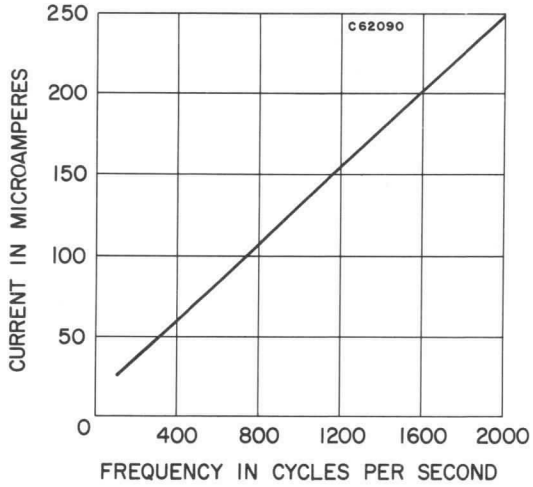

POWER VS. FREQUENCY DATA SHOWN FOR AVERAGE SEGMENT AT 220 VOLTS RMS

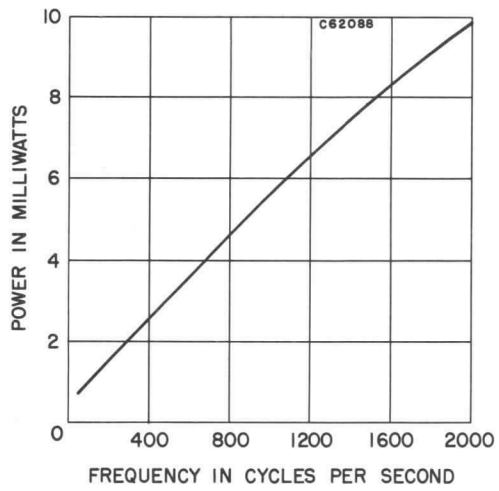

TYPICAL SPECTRAL ENERGY EMISSION CHARACTERISTICS

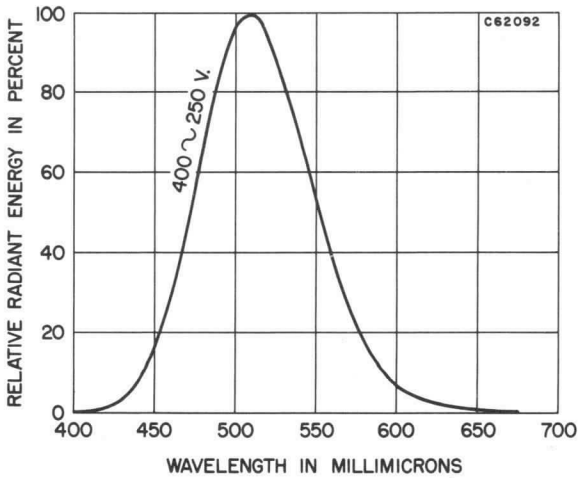

TYPICAL TRANSISTORIZED POWER SUPPLY

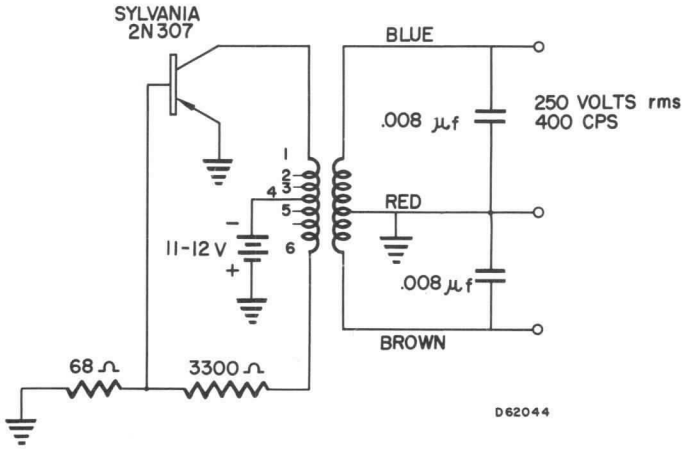

TRANSFORMER – STANCOR A-3856

MECHANICAL DATA

Construction	Glass Substrate; Neutral Density; 70 % Transmission
Dimensions	See Outline Drawing
Basing	No. 1299R Pins; K46-1101 Clips
Mounting Position	Any

MAXIMUM RATINGS

Peak Voltage	420 Volts
RMS Voltage (Sine Wave)	300 Volts
Peak Transient Voltage (Not to Exceed 0.5 Cycles at Operating Frequency)	500 Volts

TYPICAL OPERATING CONDITIONS

RMS Voltage	250 Volts
Frequency	400 cps
Power (All Segments Energized)	15 mW
Current (All Segments Energized)	300 μa
Power Factor	0.2
Light Output	10 Ft. Lamberts

NOTE:

1. *It is recommended that this device be operated from a minimum source impedance of 10K ohms.*

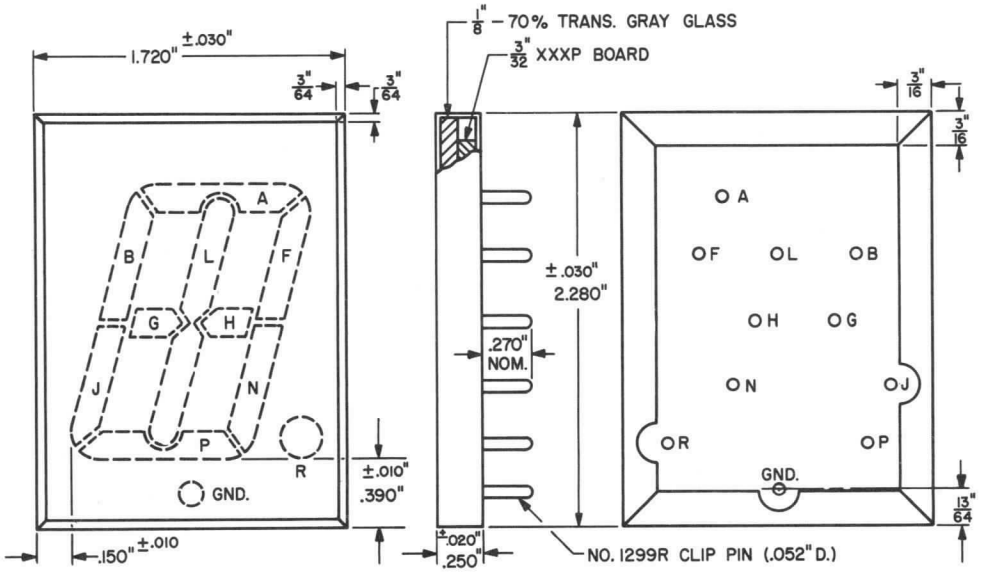

QUICK REFERENCE DATA

The Sylvania Type NU151A is an electroluminescent numeric display device. It features 9 segments, plus a decimal point, in a character height of 1½". Combinations of segments may be lighted to form all the numbers from 0 thru 9 in addition to some symbols. The device features wide viewing angle, minimal catastrophic failure and very low power consumption.

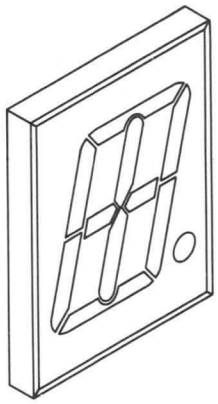

SYLVANIA
ELECTRONIC TUBES

A Division of
Sylvania Electric Products Inc.

PICTURE TUBE
OPERATIONS

SENECA FALLS, NEW YORK

Prepared and Released By The
TECHNICAL PUBLICATIONS SECTION
EMPORIUM, PENNSYLVANIA

MARCH, 1963

File Under
ELECTROLUMINESCENT DEVICES

LIGHT OUTPUT VS. VOLTAGE AND FREQUENCY

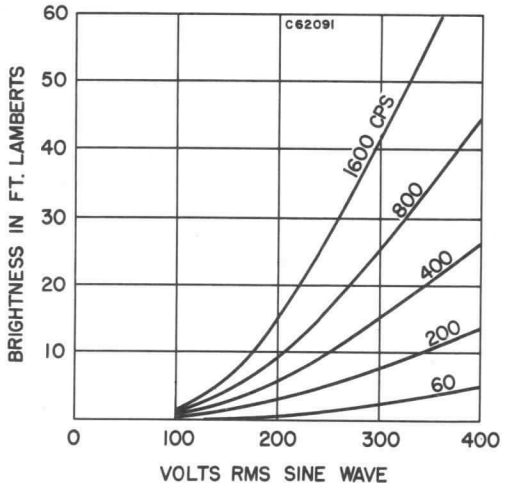

AVERAGE SEGMENT IMPEDANCE VS. VOLTAGE AND FREQUENCY

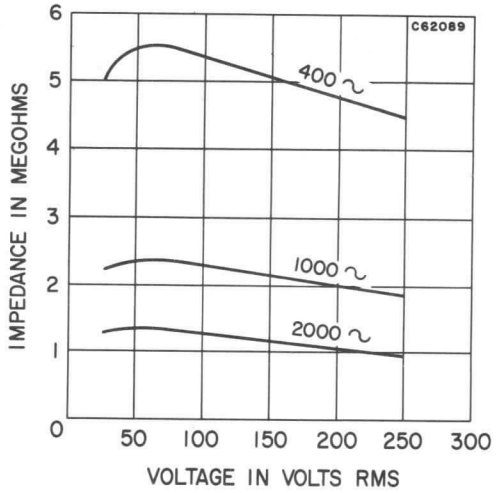

CURRENT VS. FREQUENCY DATA SHOWN FOR AVERAGE SEGMENT AT 220 VOLTS RMS

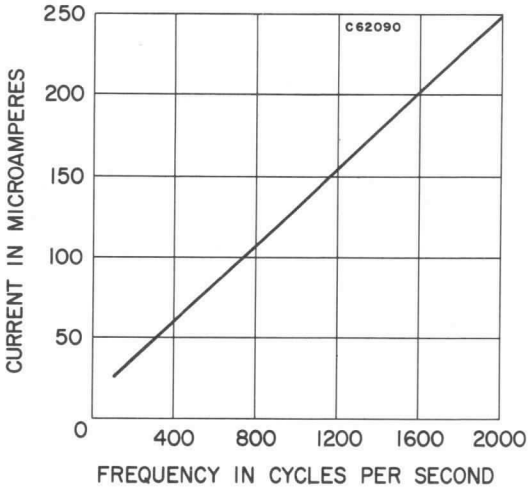

POWER VS. FREQUENCY DATA SHOWN FOR AVERAGE SEGMENT AT 220 VOLTS RMS

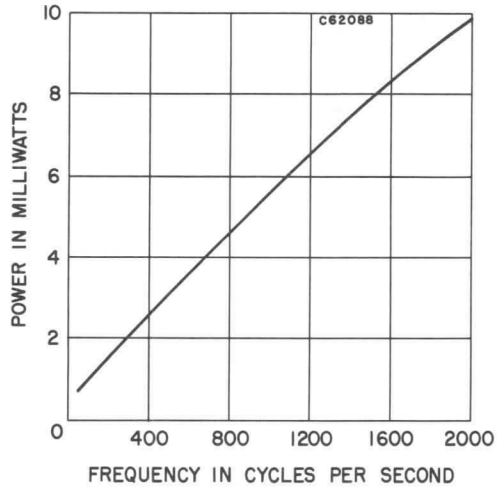

TYPICAL SPECTRAL ENERGY EMISSION CHARACTERISTICS

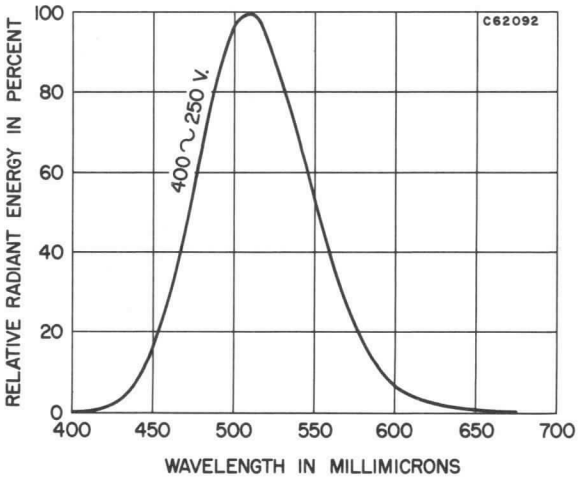

TYPICAL TRANSISTORIZED POWER SUPPLY

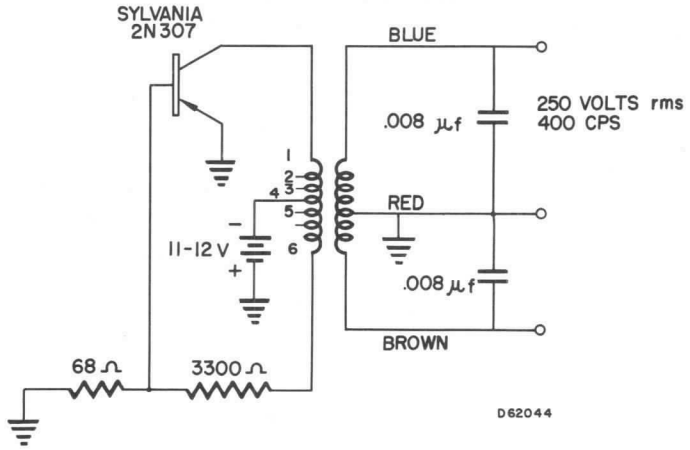

TRANSFORMER-STANCOR A-3856

MECHANICAL DATA

Construction	Glass Substrate; Neutral Density; 70 % Transmission
Dimensions	See Outline Drawing
Basing	No. 1299R Pins (K46-1101 Clips)
Mounting Position	Any

MAXIMUM RATINGS

Peak Voltage	420 Volts
RMS Voltage (Sine Wave)	300 Volts
Peak Transient Voltage (Not to Exceed 0.5 Cycles at Operating Frequency)	500 Volts

TYPICAL OPERATING CONDITIONS

RMS Voltage	250 Volts
Frequency	400 cps
Power (Per Numeric)	15 mW
Current (Per Numeric)	300 μa
Power Factor	0.2
Light Output	10 Ft. Lamberts

NOTES:

1. *It is recommended that this device be operated from a minimum source impedance of 10K ohms.*
2. *Tie both common connectors together.*

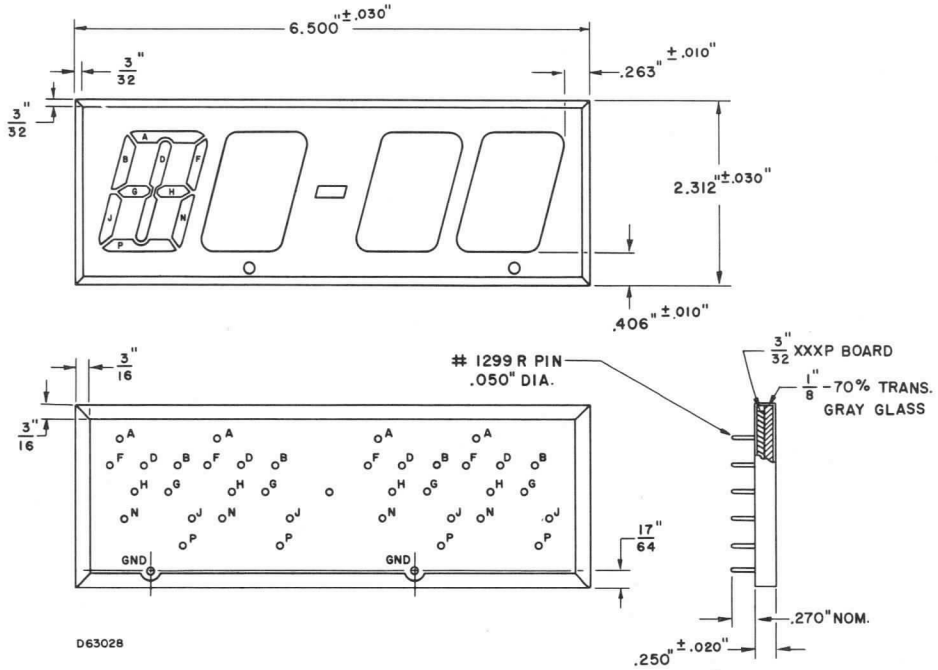

QUICK REFERENCE DATA

EL Numeric Display
4 Digit Numeric
9 Segment Design
Hyphen Between Digits 2 and 3
1½" Character Height
Wide Viewing Angle Parallax Free
Very Low Power Consumption
Fast Switching Speeds
Compact Design
Minimal Catastrophic Failure

SYLVANIA
ELECTRONIC TUBES

A Division of
Sylvania Electric Products Inc.

PICTURE TUBE
OPERATIONS

SENECA FALLS, NEW YORK

Prepared and Released By The
TECHNICAL PUBLICATIONS SECTION
EMPORIUM, PENNSYLVANIA

OCTOBER, 1963

File Under
ELECTROLUMINESCENT DEVICES

LIGHT OUTPUT VS. VOLTAGE AND FREQUENCY

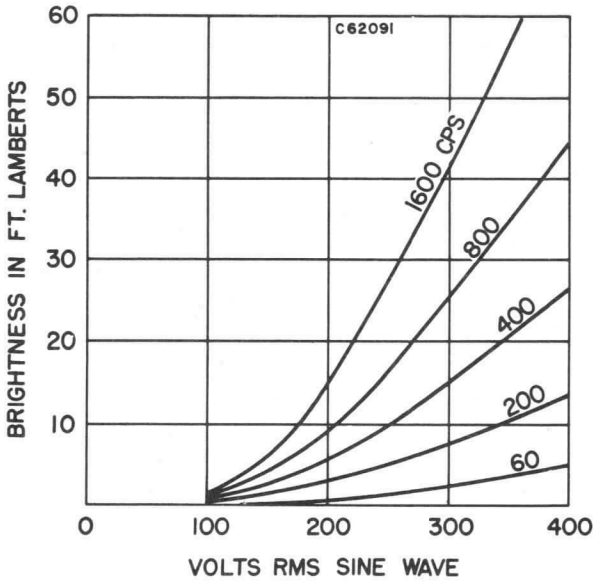

TYPICAL SPECTRAL ENERGY EMISSION CHARACTERISTICS

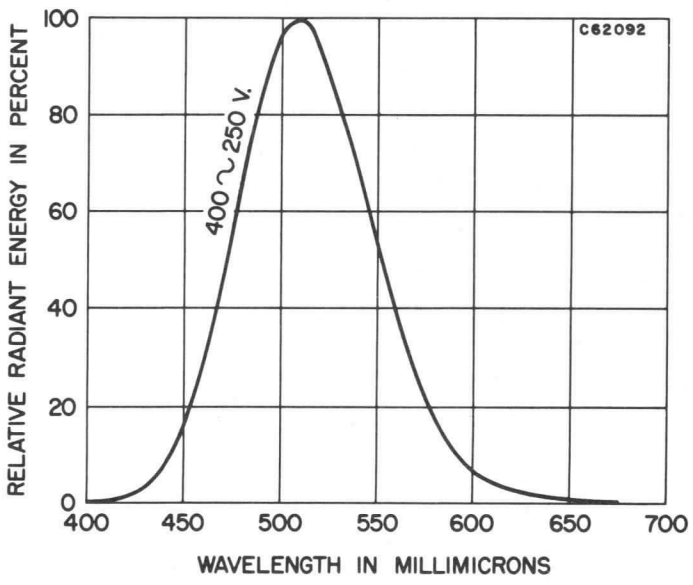

TYPICAL TRANSISTORIZED POWER SUPPLY

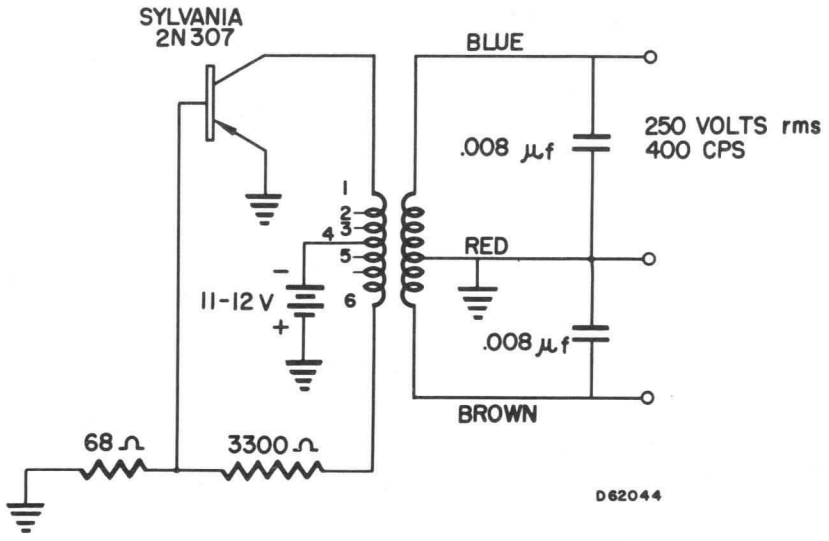

TRANSFORMER–STANCOR A-3856

MECHANICAL DATA

Construction	Glass Substrate; Neutral Density; 70 % Transmission
Dimensions	See Outline Drawing
Basing	No. 1299R Pins; K46-1101 Clips
Mounting Position	Any

MAXIMUM RATINGS

Peak Voltage	420 Volts
RMS Voltage (Sine Wave)	300 Volts
Peak Transient Voltage (Not to Exceed 0.5 Cycles at Operating Frequency)	500 Volts

TYPICAL OPERATING CONDITIONS

RMS Voltage	250-300 Volts
Frequency	400 cps
Power (Per Numeric—All Segments Energized)	18 mW
Power Factor	0.2
Light Output	10 Ft. Lamberts

NOTES:

1. *It is recommended that this device be operated from a minimum source impedance of 10 K-ohms.*
2. *All three common connector pins should be tied together.*

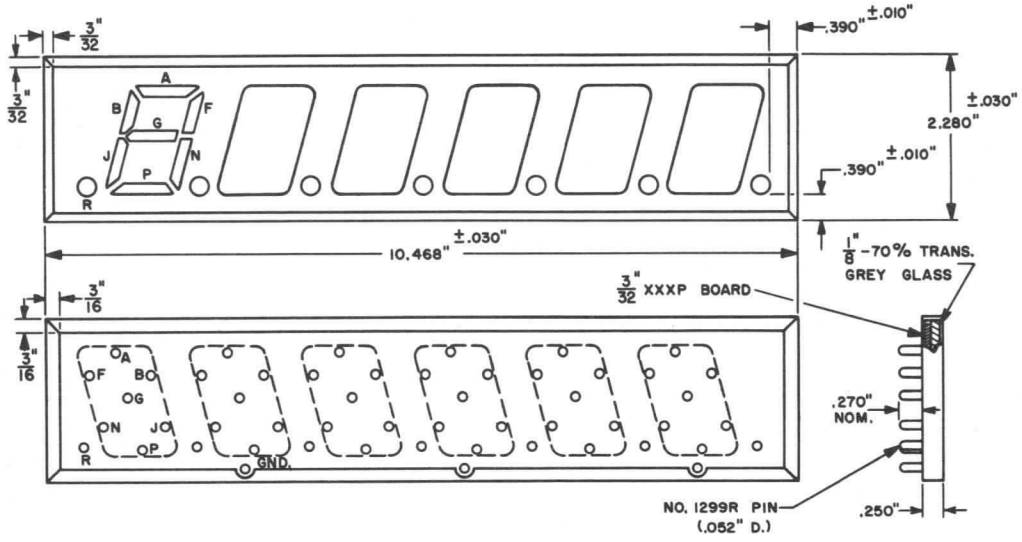

QUICK REFERENCE DATA

The Sylvania Type NU156 is an electroluminescent numeric display device featuring 1½″ characters. Each of the 6 digits is capable of displaying the numbers "0" thru "9".

SYLVANIA
ELECTRONIC TUBES

A Division of
Sylvania Electric Products Inc.

PICTURE TUBE
OPERATIONS

SENECA FALLS, NEW YORK

Prepared and Released By The
TECHNICAL PUBLICATIONS SECTION
EMPORIUM, PENNSYLVANIA

JULY, 1963

File Under
ELECTROLUMINESCENT DEVICES

LIGHT OUTPUT VS. VOLTAGE AND FREQUENCY

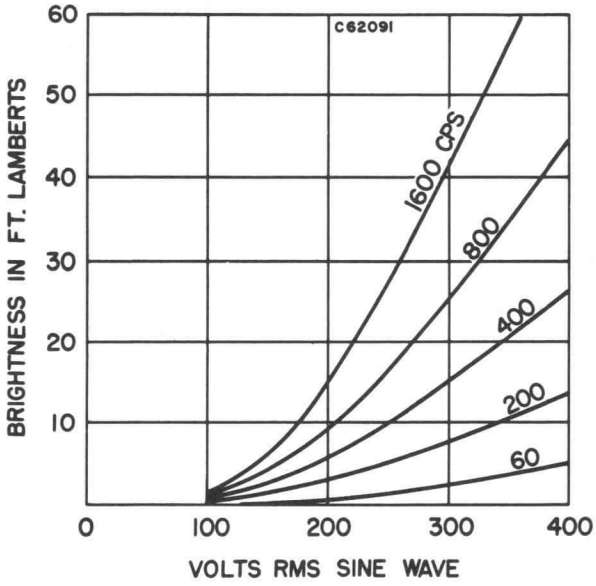

TYPICAL SPECTRAL ENERGY EMISSION CHARACTERISTICS

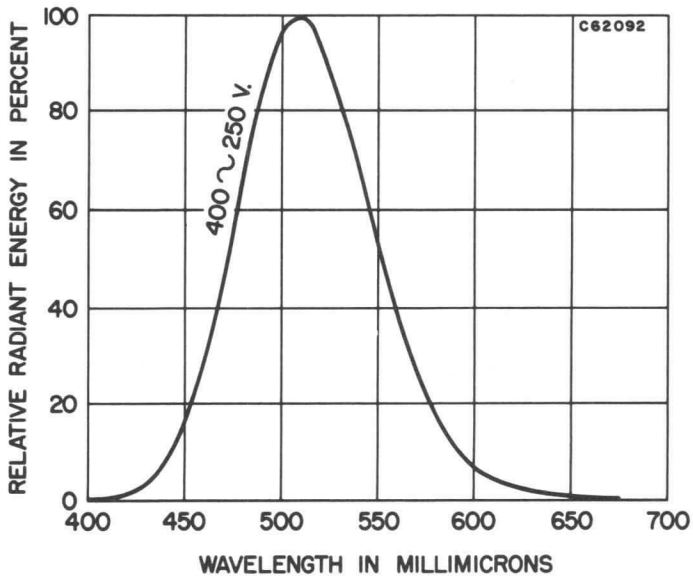

TYPICAL TRANSISTORIZED POWER SUPPLY

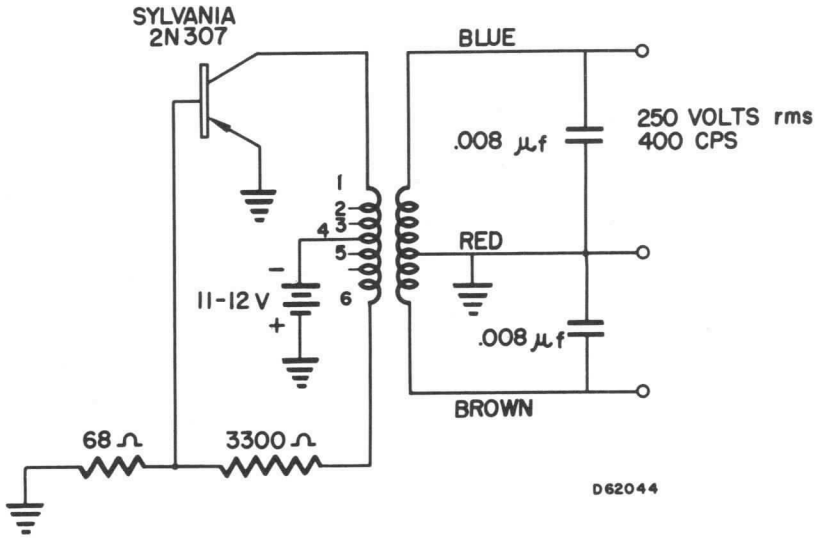

TRANSFORMER-STANCOR A-3856

SYLVANIA

engineering data service

SYLVANIA

NU157

MECHANICAL DATA

Construction	Glass Substrate; Neutral Density; 70 % Transmission
Dimensions	See Outline Drawing
Basing	No. 1299R Pins; K46-1101 Clips
Mounting Position	Any

MAXIMUM RATINGS

Peak Voltage	420 Volts
RMS Voltage (Sine Wave)	300 Volts
Peak Transient Voltage (Not to Exceed 0.5 Cycles at Operating Frequency)	500 Volts

TYPICAL OPERATING CONDITIONS

RMS Voltage	250-300 Volts
Frequency	400 cps
Power (Per Numeric—All Segments Energized)	18 mW
Power Factor	0.2
Light Output	10 Ft. Lamberts

NOTES:

1. *It is recommended that this device be operated from a minimum source impedance of 10 K-ohms.*
2. *All three common connector pins should be tied together.*

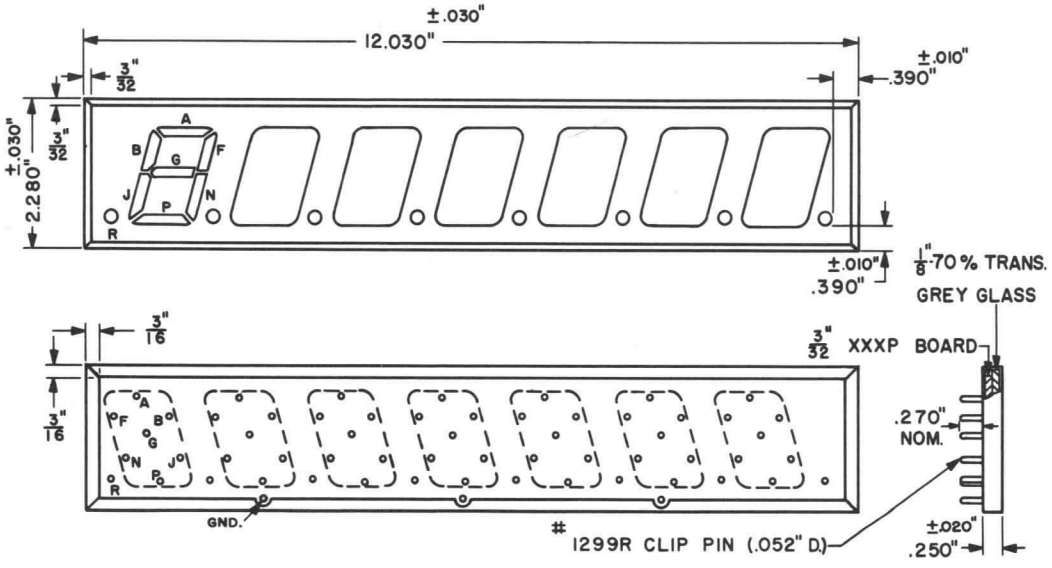

QUICK REFERENCE DATA

The Sylvania Type NU157 is an electroluminescent numeric display device featuring 1½" characters. Each of the 7 digits is capable of displaying the numbers "0" thru "9".

SYLVANIA
ELECTRONIC TUBES

A Division of
Sylvania Electric Products Inc.

PICTURE TUBE
OPERATIONS

SENECA FALLS, NEW YORK

Prepared and Released By The
TECHNICAL PUBLICATIONS SECTION
EMPORIUM, PENNSYLVANIA

JULY, 1963

File Under
ELECTROLUMINESCENT DEVICES

LIGHT OUTPUT VS. VOLTAGE AND FREQUENCY

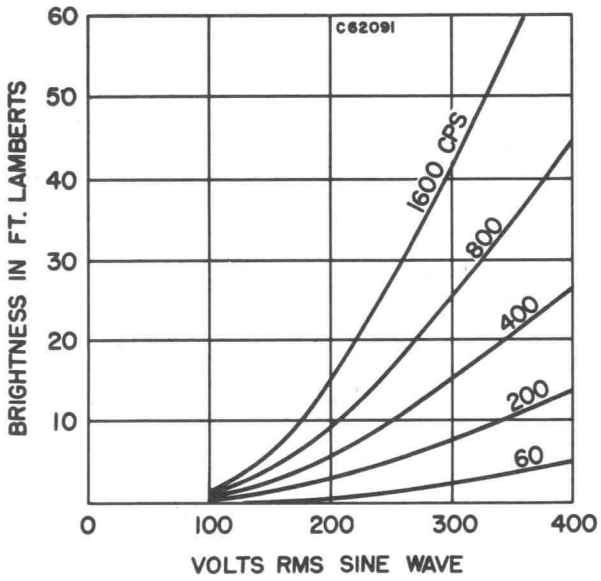

TYPICAL SPECTRAL ENERGY EMISSION CHARACTERISTICS

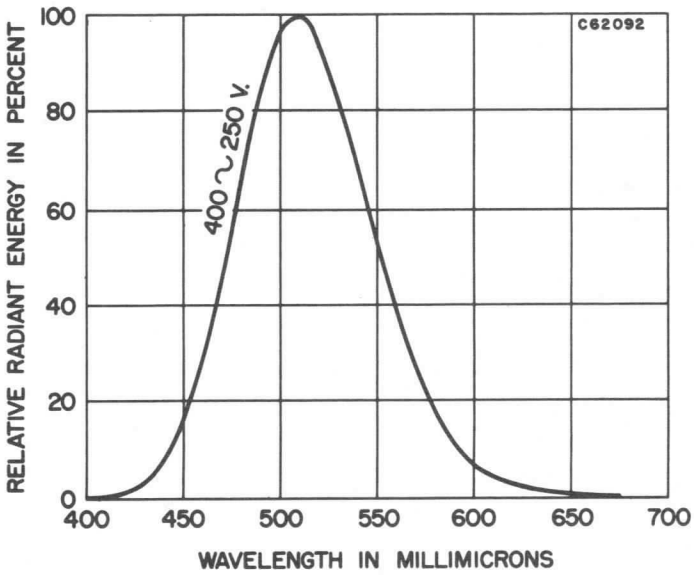

TYPICAL TRANSISTORIZED POWER SUPPLY

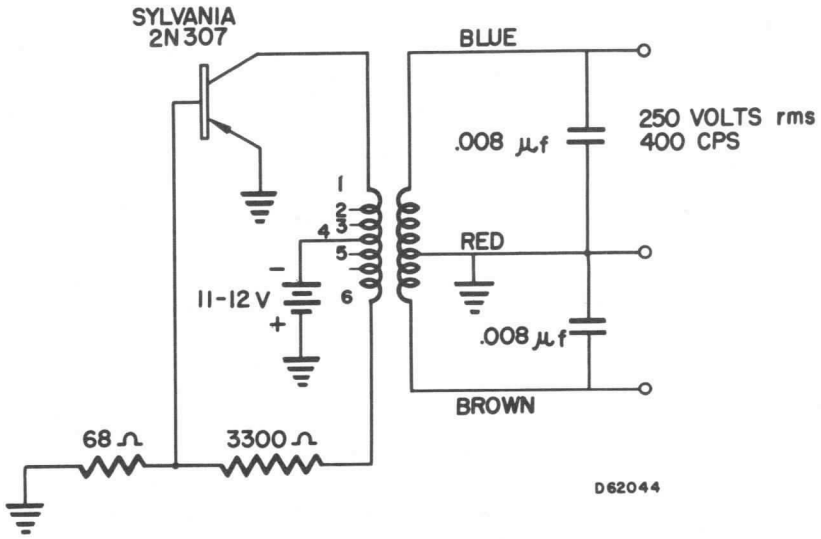

TRANSFORMER-STANCOR A-3856

MECHANICAL DATA

Construction	Glass Substrate; Neutral Density; 70 % Transmission
Dimensions	See Outline Drawing
Basing	No. 1333 Pins
Mounting Position	Any

MAXIMUM RATINGS

Peak Voltage	420 Volts
RMS Voltage (Sine Wave)	300 Volts
Peak Transient Voltage (Not to Exceed 0.5 Cycles at Operating Frequency)	500 Volts

TYPICAL OPERATING CONDITIONS

RMS Voltage	250 Volts
Frequency	400 cps
Power (Per Alpha-Numeric)	20 mW
Current (Per Alpha-Numeric)	375 μa
Power Factor	0.2
Light Output	10 Ft. Lamberts

NOTES:

1. *It is recommended that this device be operated from a minimum source impedance of 5K ohms.*
2. *All five common connector pins should be tied together.*

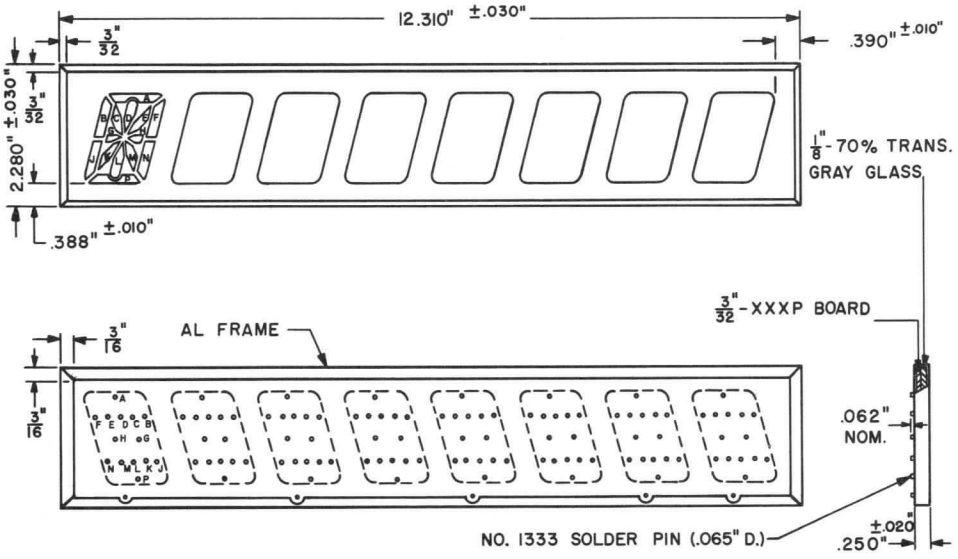

QUICK REFERENCE DATA

The Sylvania Type AN158 is an electroluminescent alpha-numeric display device featuring 8 characters in 1½″ height. There are 14 segments per character and combinations of segments may be lighted to form all letters in the alphabet as well as the numbers 0 thru 9 and some symbols. The device features wide viewing angle, minimal catastrophic failure and extremely low power consumption.

SYLVANIA
ELECTRONIC TUBES

A Division of
Sylvania Electric Products Inc.

PICTURE TUBE
OPERATIONS

SENECA FALLS, NEW YORK

Prepared and Released By The
TECHNICAL PUBLICATIONS SECTION
EMPORIUM, PENNSYLVANIA

MARCH, 1963

File Under
ELECTROLUMINESCENT DEVICES

LIGHT OUTPUT VS. VOLTAGE AND FREQUENCY

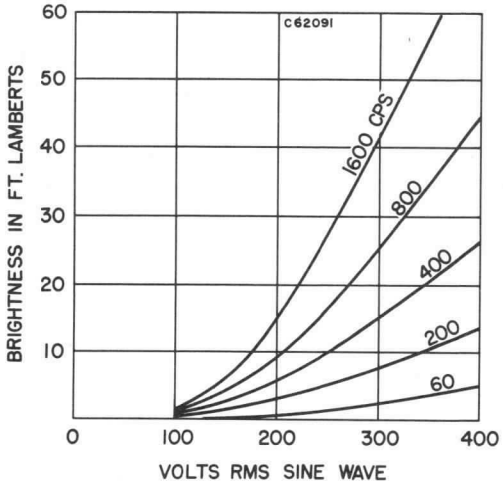

AVERAGE SEGMENT IMPEDANCE VS. VOLTAGE AND FREQUENCY

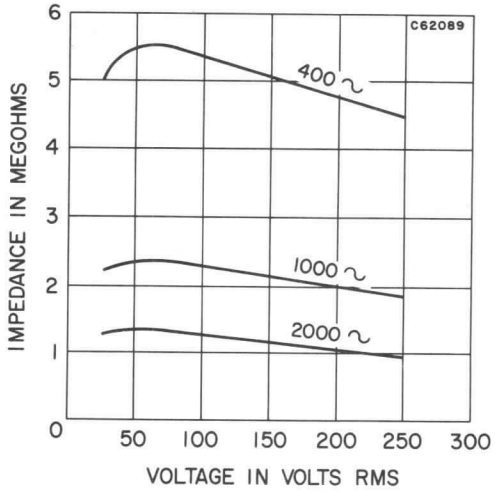

CURRENT VS. FREQUENCY DATA SHOWN FOR AVERAGE SEGMENT AT 220 VOLTS RMS

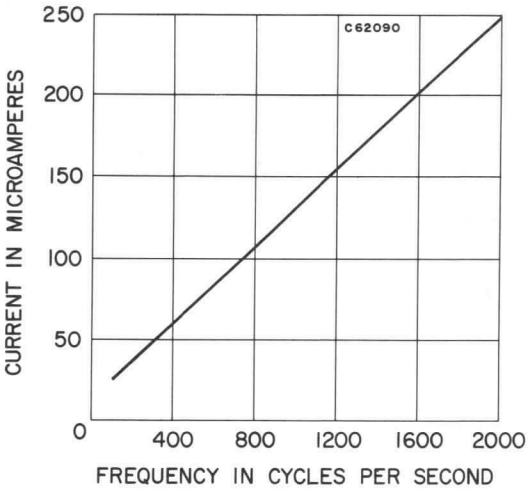

POWER VS. FREQUENCY DATA SHOWN FOR AVERAGE SEGMENT AT 220 VOLTS RMS

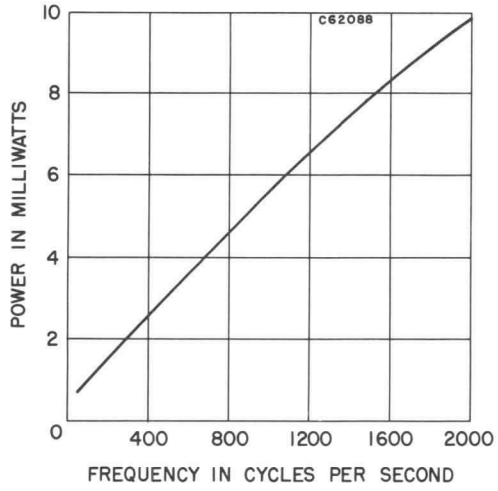

TYPICAL SPECTRAL ENERGY EMISSION CHARACTERISTICS

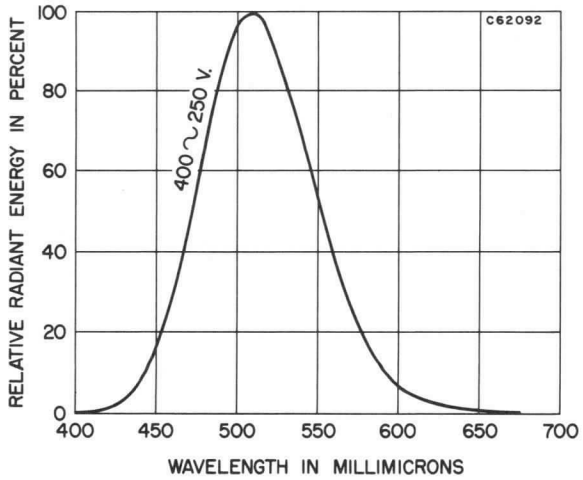

TYPICAL TRANSISTORIZED POWER SUPPLY

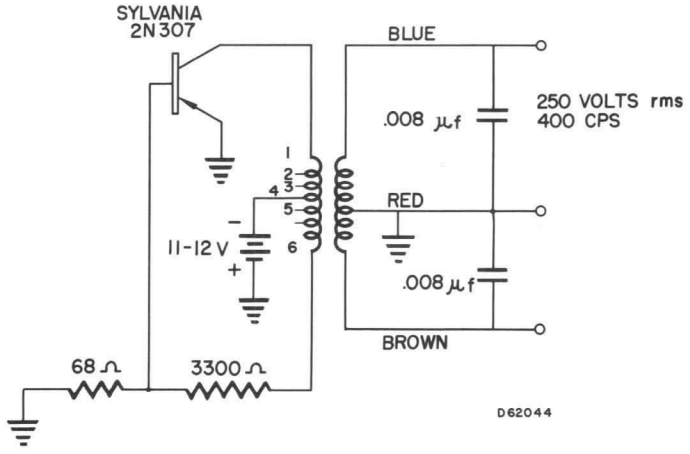

TRANSFORMER – STANCOR A-3856

DESCRIPTION

The SD176 is a four digit electroluminescent display device containing integral translation from 1-2-4-8 binary code to numerical readout. Each digit contains nine segments, and each character is one inch in height. The SD176 contains two symbols, a "dot", and an "X" and the unit of measure "Meters". AC input driving voltages may be gated using silicon controlled rectifiers, or lamp and photoconductor cell combinations. The SD150, an incandescent lamp and photoconductor combination, is an excellent means for accomplishing the input gating.

MECHANICAL DATA

Dimension	2 x 4 x ½ Inches
Basing	Solder Pins No. 1333
Mounting Position	Any

MAXIMUM RATINGS

Peak Voltage	350 Volts
RMS Sine Wave Voltage	275 Volts
Peak Transient Voltage	400 Volts
(Not to Exceed 0.5 Cycles at Operating Frequency)	

TYPICAL OPERATING CONDITIONS

RMS Voltage	200 Volts
Frequency	1600 cps
Power (Per Binary Input) (Approx.)	10 mw
Current (Per Binary Input) (Approx.)	100 μa
Power to Matrix (4 Zero Digits Lighted)	250 mw
Current to Matrix (4 Zero Digits Lighted)	3 Ma
Power Factor (Approx.)	0.2
Light Output (Approx.)	15 Ft. Lamberts

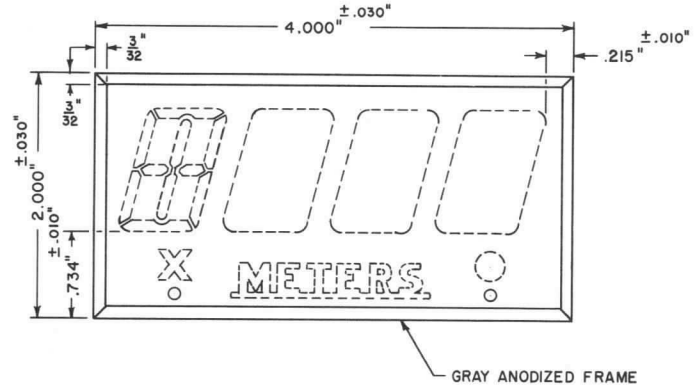

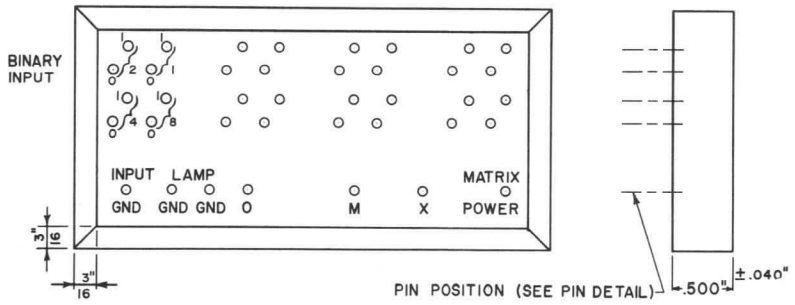

D64012

QUICK REFERENCE DATA

Readout and Translator
Multi Numeric Display
4 Digits
9 Segment Design
0 to 9 + Symbols
1" Character Height
Compact Design
Wide Viewing Angle
Parallax Free
Very Low Power Consumption

SYLVANIA ELECTRIC PRODUCTS INC.

Electronic Components Group
ELECTRONIC TUBE DIVISION
SENECA FALLS, NEW YORK

A Technical Publication

MAY, 1964

File Under
ELECTROLUMINESCENT DEVICES

PIN DETAIL

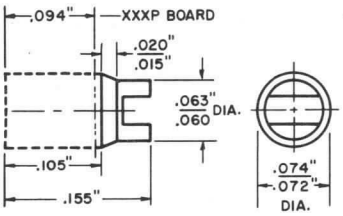

No. 1333 Solder Pin

GATING CIRCUIT

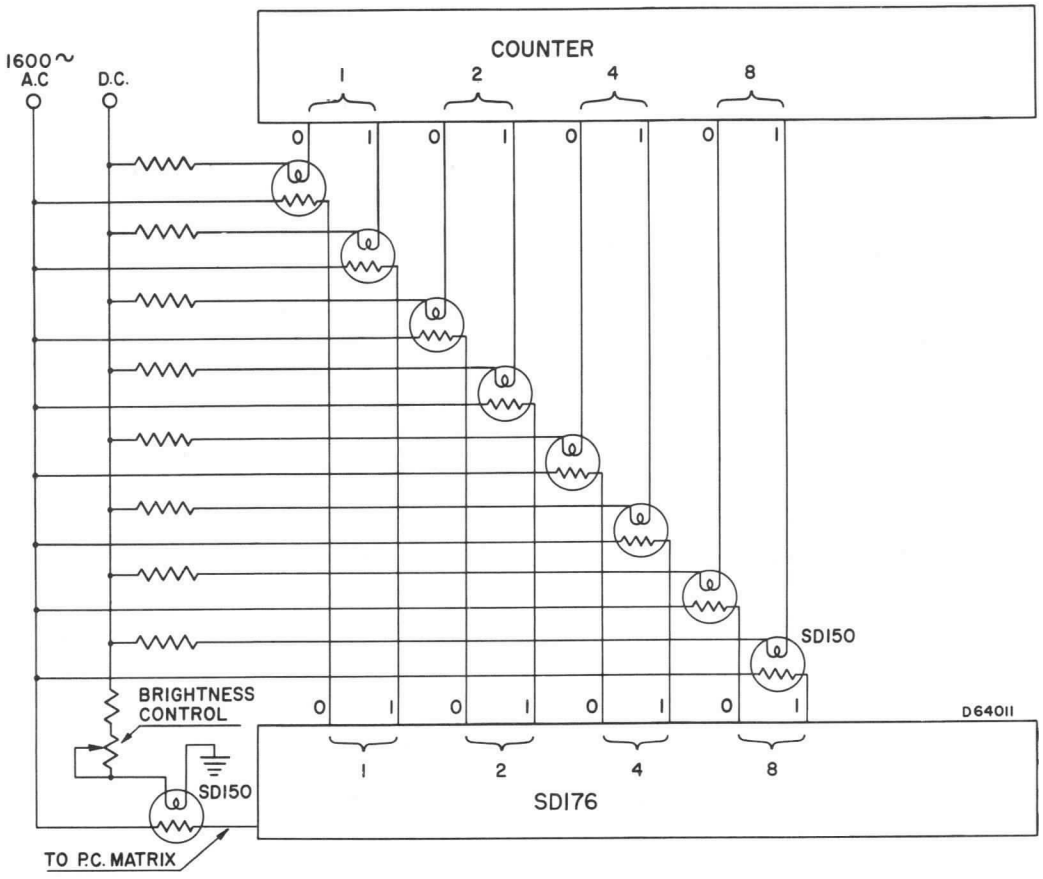

MECHANICAL DATA

Construction	Glass Substrate; Neutral Density; 70 % Transmission
Dimensions	See Outline Drawing
Basing	No. 1299R Clip Pins (K46-1101 Clips)
Mounting Position	Any

MAXIMUM RATINGS

Peak Voltage	420 Volts
RMS Voltage (Sine Wave)	300 Volts
Peak Transient Voltage (Not to Exceed 0.5 Cycles at Operating Frequency)	500 Volts

TYPICAL OPERATING CONDITIONS

RMS Voltage	250 Volts
Frequency	400 cps
Power (All Segments Energized)	70 mw
Current (All Segments Energized)	1.4 ma
Power Factor	0.2
Light Output	10 Ft. Lamberts

NOTE:

1. *It is recommended that this device be operated from a minimum source impedance of 10K ohms.*

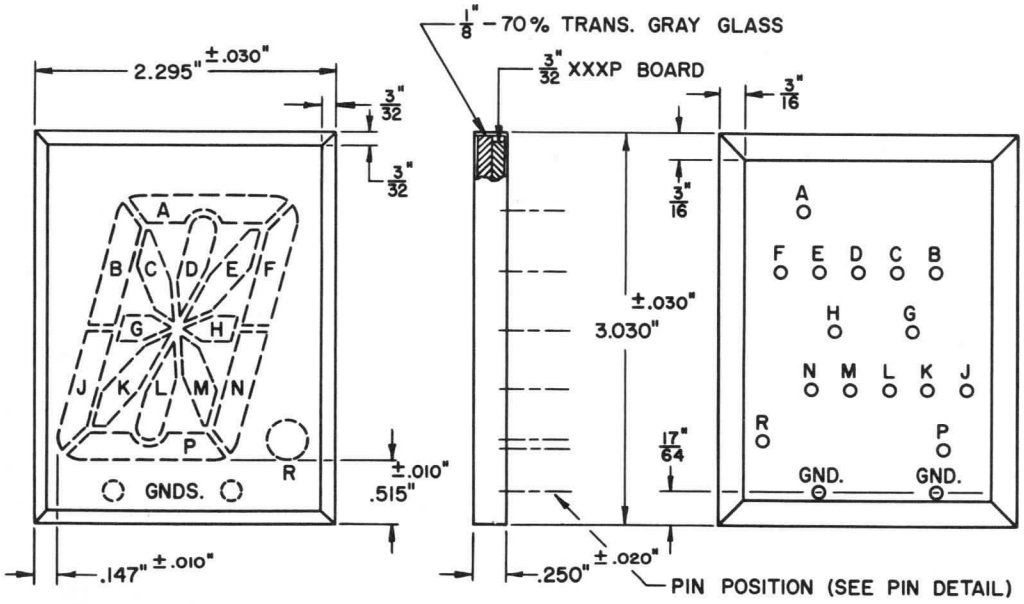

QUICK REFERENCE DATA

Electroluminescent
Alpha-Numeric Display
1 Character
14 Segment Design
0 to 9 + Decimal Point
Letters of Alphabet + Some Symbols
2" Character Height
Compact Design
Wide Angle Viewing
Parallax Free
Fast Switching Speed
Very Low Power Consumption
Minimal Catastrophic Failure

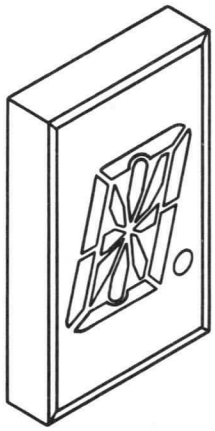

SYLVANIA
ELECTRONIC TUBES

A Division of
Sylvania Electric Products Inc.

PICTURE TUBE
OPERATIONS

SENECA FALLS, NEW YORK

Prepared and Released By The
TECHNICAL PUBLICATIONS SECTION
EMPORIUM, PENNSYLVANIA

DECEMBER, 1963

File Under
ELECTROLUMINESCENT DEVICES

PIN DETAIL

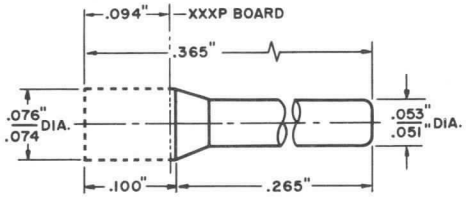

No. 1299R Clip Pin

TYPICAL TRANSISTORIZED POWER SUPPLY

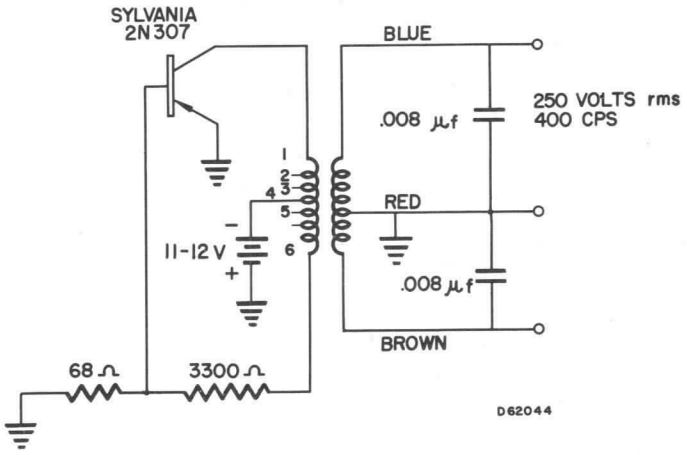

TRANSFORMER–STANCOR A-3856

LIGHT OUTPUT VS. VOLTAGE AND FREQUENCY

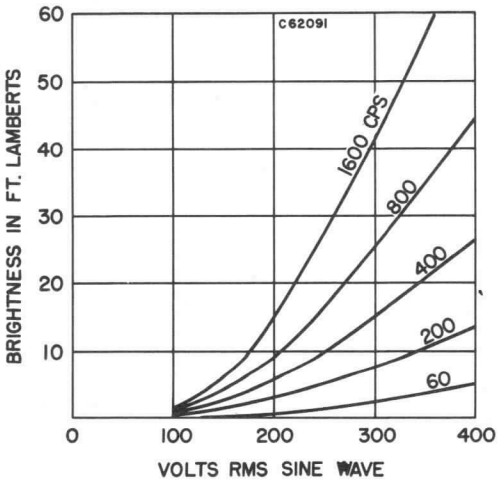

TYPICAL SPECTRAL ENERGY EMISSION CHARACTERISTICS

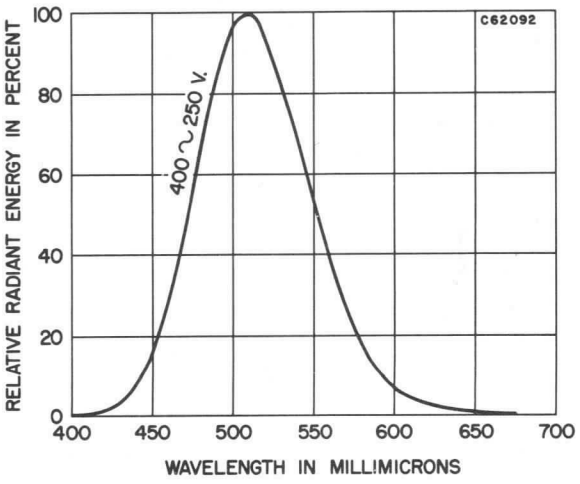

MECHANICAL DATA

Construction	Glass Substrate; Neutral Density; 70 % Transmission
Dimensions	See Outline Drawing
Basing	No. 1299R Pins; K46-1101 Clips
Mounting Position	Any

MAXIMUM RATINGS

Peak Voltage	420 Volts
RMS Voltage (Sine Wave)	300 Volts
Peak Transient Voltage (Not to Exceed 0.5 Cycles at Operating Frequency)	500 Volts

TYPICAL OPERATING CONDITIONS

RMS Voltage	250 Volts
Frequency	400 cps
Power (Per Numeric)	30 mW
Current (Per Numeric)	600 μa
Power Factor	0.2
Light Output	10 Ft. Lamberts

NOTES:

1. *It is recommended that this device be operated from a minimum source impedance of 10K ohms.*
2. *All five common connector pins should be tied together.*

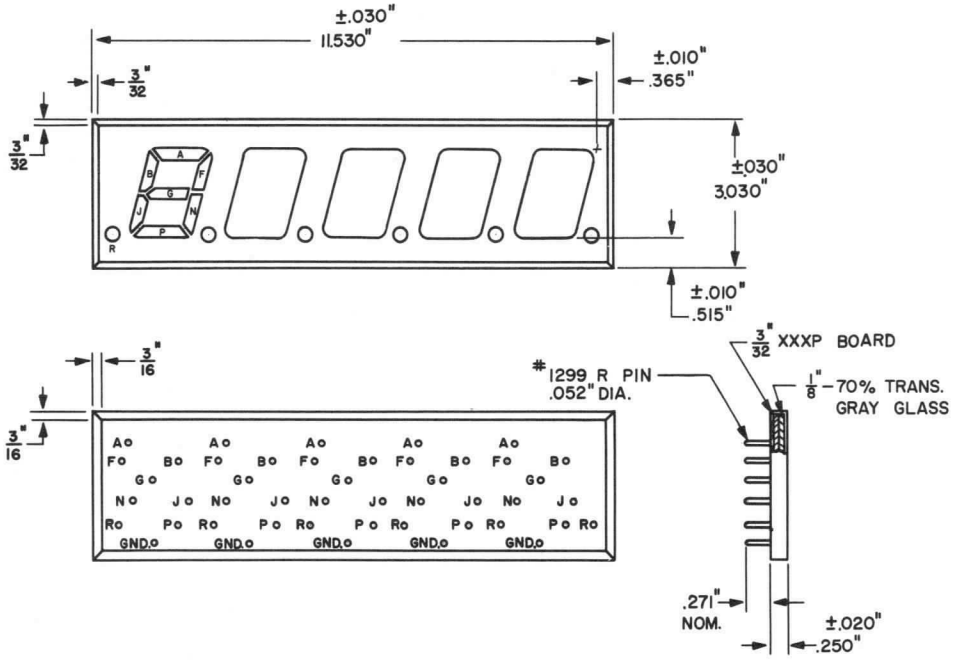

QUICK REFERENCE DATA

The Sylvania Type NU205 is an electroluminescent numeric display device featuring 2″ characters. Each of the 5 digits is capable of displaying the numbers 0 thru 9. The device features wide viewing angle and very low power consumption.

SYLVANIA
ELECTRONIC TUBES

A Division of
Sylvania Electric Products Inc.

PICTURE TUBE
OPERATIONS

SENECA FALLS, NEW YORK

Prepared and Released By The
TECHNICAL PUBLICATIONS SECTION
EMPORIUM, PENNSYLVANIA

MARCH, 1963

File Under
ELECTROLUMINESCENT DEVICES

LIGHT OUTPUT VS. VOLTAGE AND FREQUENCY

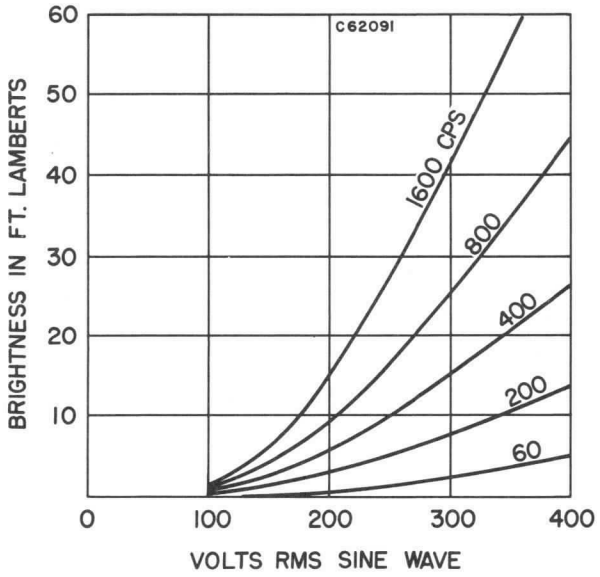

TYPICAL SPECTRAL ENERGY EMISSION CHARACTERISTICS

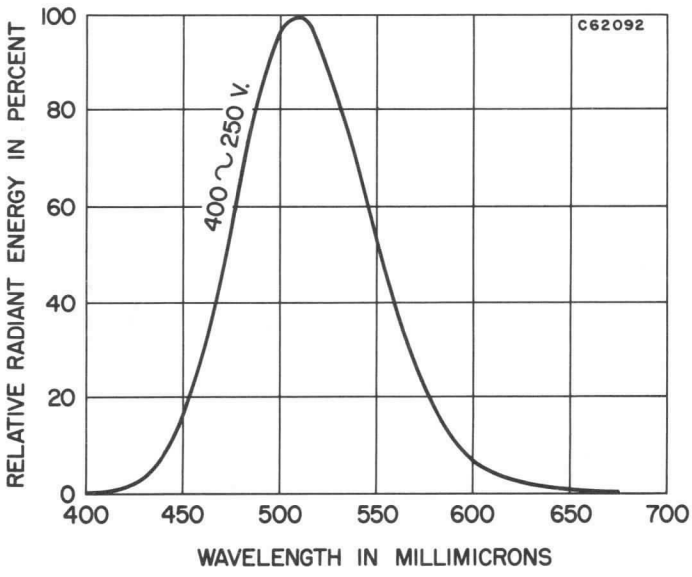

TYPICAL TRANSISTORIZED POWER SUPPLY

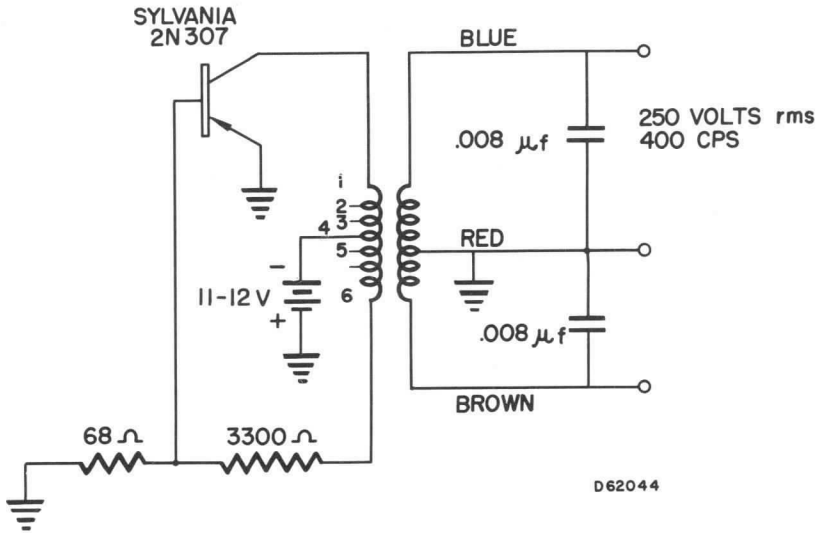

TRANSFORMER-STANCOR A-3856

MECHANICAL DATA

Construction	Glass Substrate; Neutral Density; 70 % Transmission
Dimensions	See Outline Drawing
Basing	No. 1299R Clip Pins (K46-1101 Clips)
Mounting Position	Any

MAXIMUM RATINGS

Peak Voltage	420 Volts
RMS Voltage (Sine Wave)	300 Volts
Peak Transient Voltage (Not to Exceed 0.5 Cycles at Operating Frequency)	500 Volts

TYPICAL OPERATING CONDITIONS

RMS Voltage	250 Volts
Frequency	400 cps
Power (Per Numeric)	150 mW
Current (Per Numeric)	3.0 ma
Power Factor	0.2
Light Output	10 Ft. Lamberts

NOTES:

1. *It is recommended that this device be operated from a minimum source impedance of 10K ohms.*
2. *Tie all eight common connectors together.*

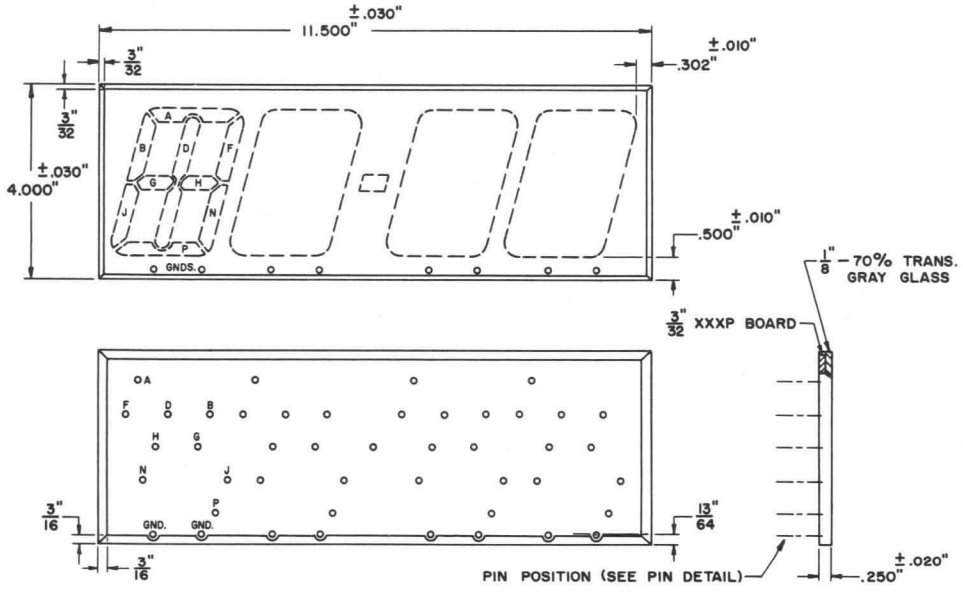

QUICK REFERENCE DATA

Electroluminescent
Multi-Numeric Display
4 Digits
9 Segment Design
0 to 9 + Some Symbols
Hyphen Between Digits 2 and 3
3″ Character Height
Compact Design
Wide Angle Viewing
Parallax Free
Fast Switching Speed
Very Low Power Consumption
Minimal Catastrophic Failure

SYLVANIA
ELECTRONIC TUBES

A Division of
Sylvania Electric Products Inc.

PICTURE TUBE
OPERATIONS

SENECA FALLS, NEW YORK

Prepared and Released By The
TECHNICAL PUBLICATIONS SECTION
EMPORIUM, PENNSYLVANIA

DECEMBER, 1963

File Under
ELECTROLUMINESCENT DEVICES

PIN DETAIL

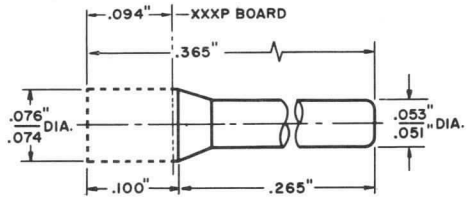

No. 1299R Clip Pin

TYPICAL TRANSISTORIZED POWER SUPPLY

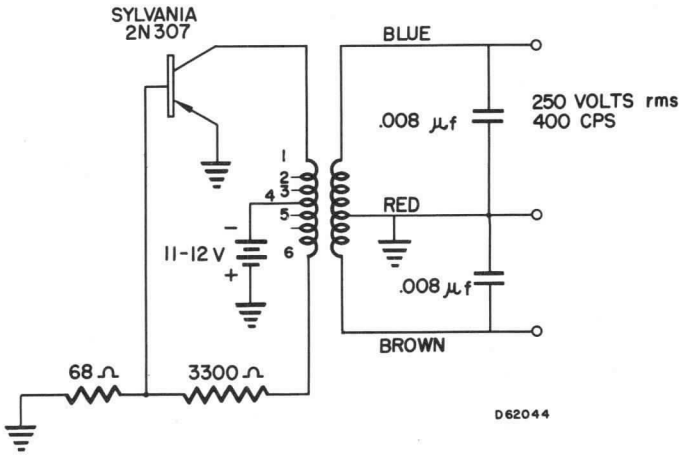

TRANSFORMER–STANCOR A-3856

LIGHT OUTPUT VS. VOLTAGE AND FREQUENCY

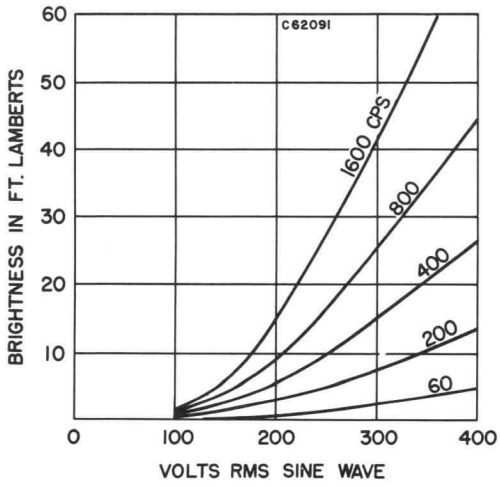

TYPICAL SPECTRAL ENERGY EMISSION CHARACTERISTICS

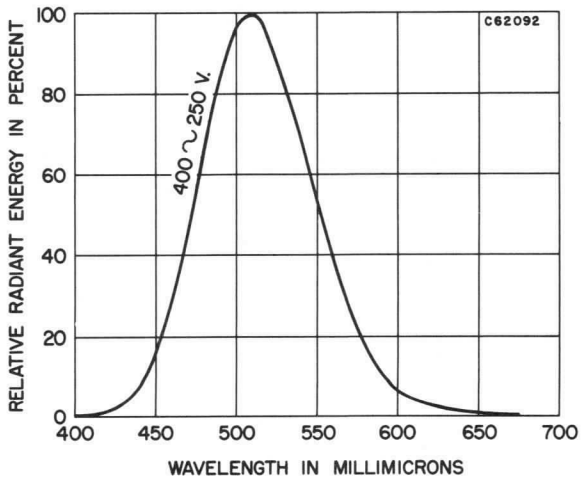

MECHANICAL DATA

Construction	Glass Substrate; Neutral Density; 70 % Transmission
Dimensions	See Outline Drawing
Basing	No. 1299R Pins; K46-1101 Clips
Mounting Position	Any

MAXIMUM RATINGS

Peak Voltage	420 Volts
RMS Voltage (Sine Wave)	300 Volts
Peak Transient Voltage (Not to Exceed 0.5 Cycles at Operating Frequency)	500 Volts

TYPICAL OPERATING CONDITIONS

RMS Voltage	250 Volts
Frequency	400 cps
Power (All Segments Energized)	160 mW
Current (All Segments Energized)	3.25 ma
Power Factor	0.2
Light Output	10 Ft. Lamberts

NOTES:

1. *It is recommended that this device be operated from a minimum source impedance of 8.2K ohms.*
2. *All five common connector pins should be tied together.*

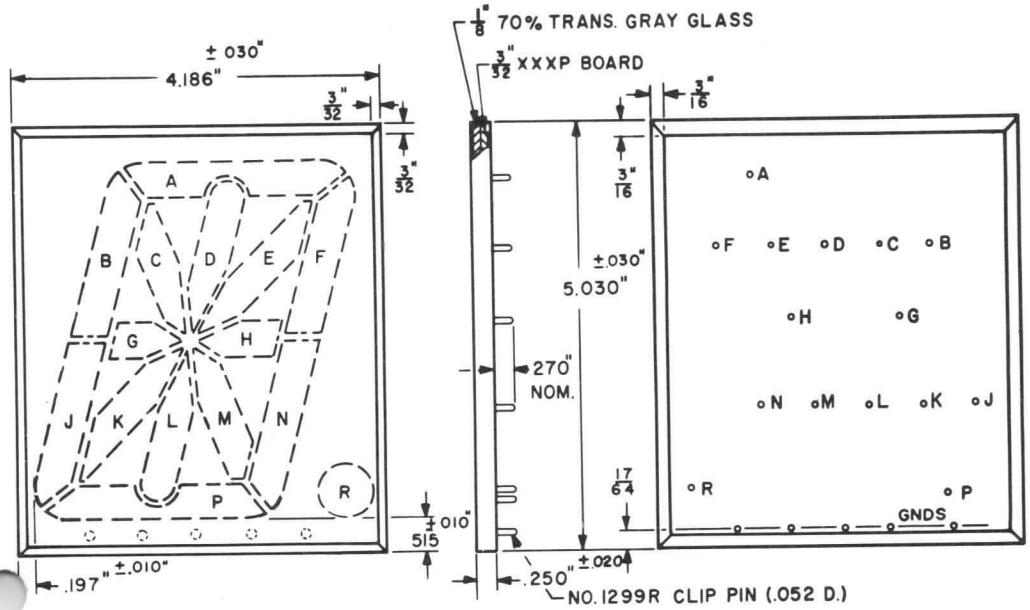

QUICK REFERENCE DATA

The Sylvania Type AN401 is an electroluminescent alpha-numeric display device. It features 14 segments in a character height of 4″. Combinations of segments may be lighted to form all letters in the alphabet as well as the numbers 0 thru 9 and some symbols. The device features wide viewing angle, minimal catastrophic failure and extremely low power consumption.

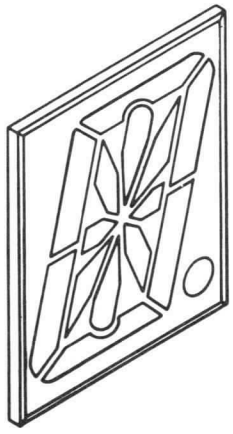

SYLVANIA
ELECTRONIC TUBES

A Division of
Sylvania Electric Products Inc.

PICTURE TUBE
OPERATIONS

SENECA FALLS, NEW YORK

Prepared and Released By The
TECHNICAL PUBLICATIONS SECTION
EMPORIUM, PENNSYLVANIA

MARCH, 1963

File Under
ELECTROLUMINESCENT DEVICES

TYPICAL TRANSISTORIZED POWER SUPPLY

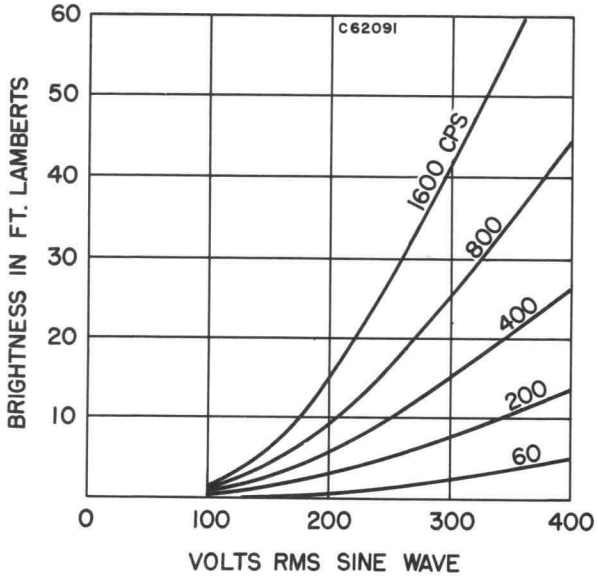

TYPICAL SPECTRAL ENERGY EMISSION CHARACTERISTICS

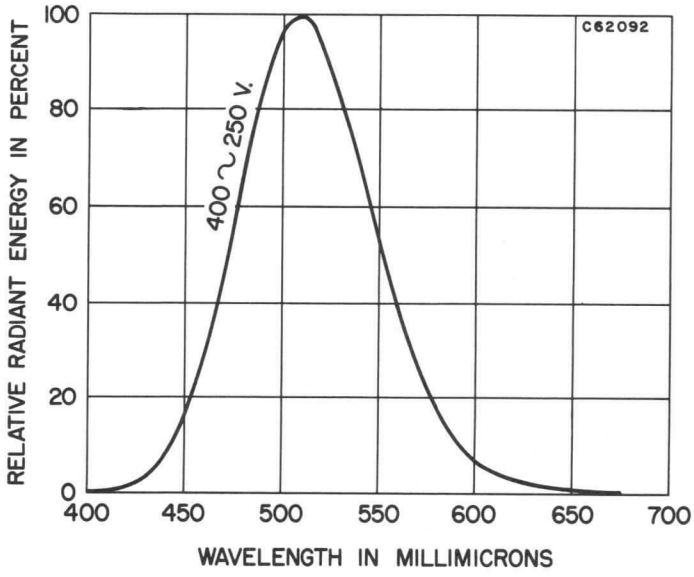

LIGHT OUTPUT VS. VOLTAGE AND FREQUENCY

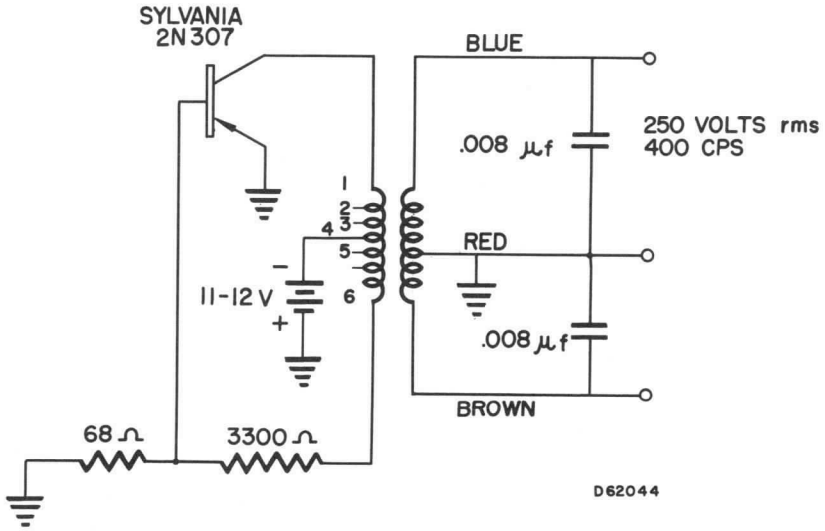

TRANSFORMER–STANCOR A-3856

MECHANICAL DATA

Construction	Glass Substrate; Neutral Density; 70 % Transmission
Dimensions	See Outline Drawing
Basing	No. 1299R Pins; K46-1101 Clips
Mounting Position	Any

MAXIMUM RATINGS

Peak Voltage	420 Volts
RMS Voltage (Sine Wave)	300 Volts
Peak Transient Voltage (Not to Exceed 0.5 Cycles at Operating Frequency)	500 Volts

TYPICAL OPERATING CONDITIONS

RMS Voltage	250 Volts
Frequency	400 cps
Power (All Segments Energized)	300 mW
Current (All Segments Energized)	3.5 ma
Power Factor	0.2
Light Output	10 Ft. Lamberts

NOTES:

1. *It is recommended that this device be operated from a minimum source impedance of 10K ohms.*
2. *All five common connector pins should be tied together.*

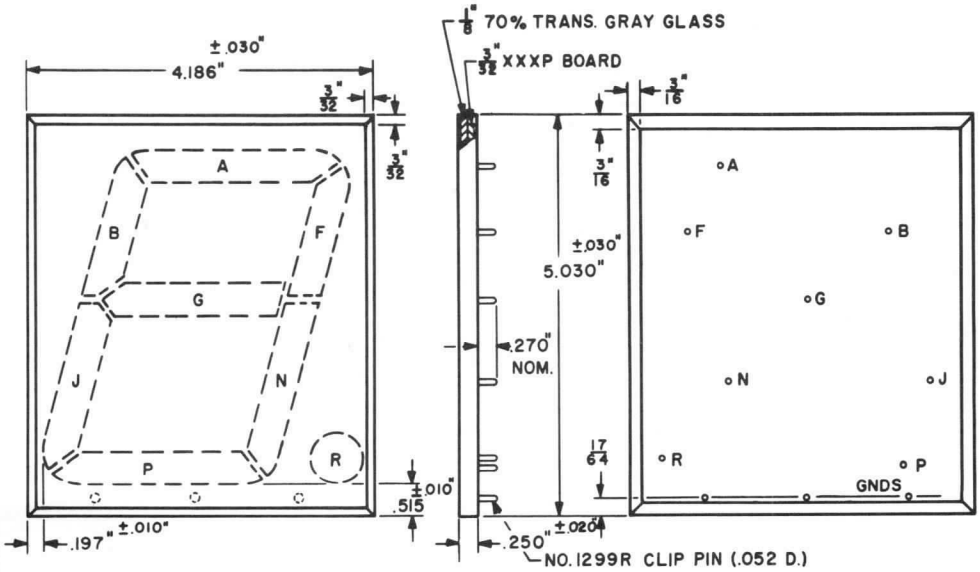

QUICK REFERENCE DATA

The Sylvania Type NU401 is an electroluminescent numeric display device. It features 7 segments, plus a decimal point, in a character height of 4″. Combinations of segments may be lighted to form all the numbers from 0 thru 9. The device features wide viewing angle, minimal catastrophic failure and very low power consumption.

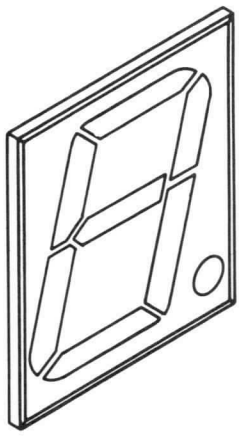

SYLVANIA
ELECTRONIC TUBES

A Division of
Sylvania Electric Products Inc.

PICTURE TUBE
OPERATIONS

SENECA FALLS, NEW YORK

Prepared and Released By The
TECHNICAL PUBLICATIONS SECTION
EMPORIUM, PENNSYLVANIA

MARCH, 1963

File Under
ELECTROLUMINESCENT DEVICES

LIGHT OUTPUT VS. VOLTAGE AND FREQUENCY

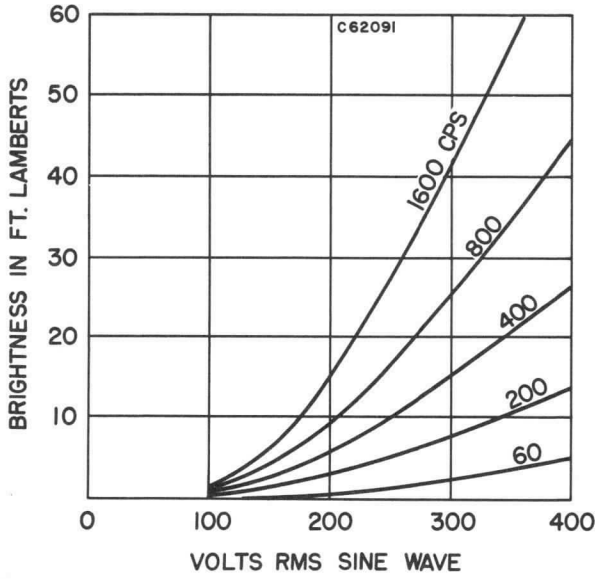

TYPICAL SPECTRAL ENERGY EMISSION CHARACTERISTICS

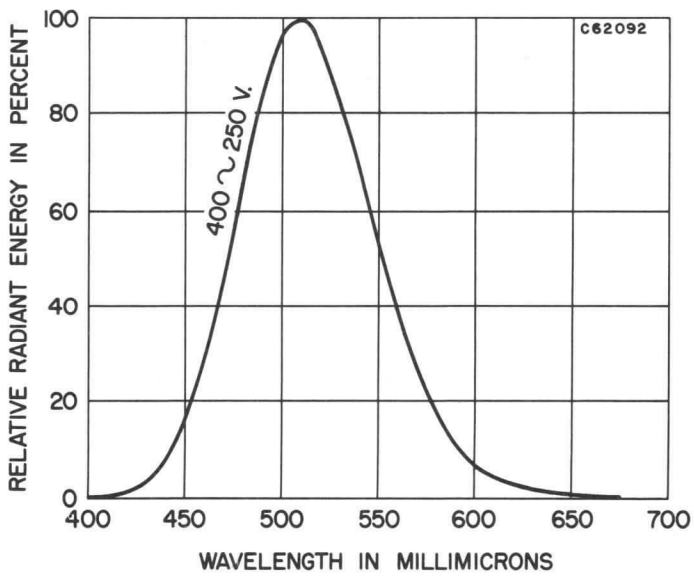

TYPICAL TRANSISTORIZED POWER SUPPLY

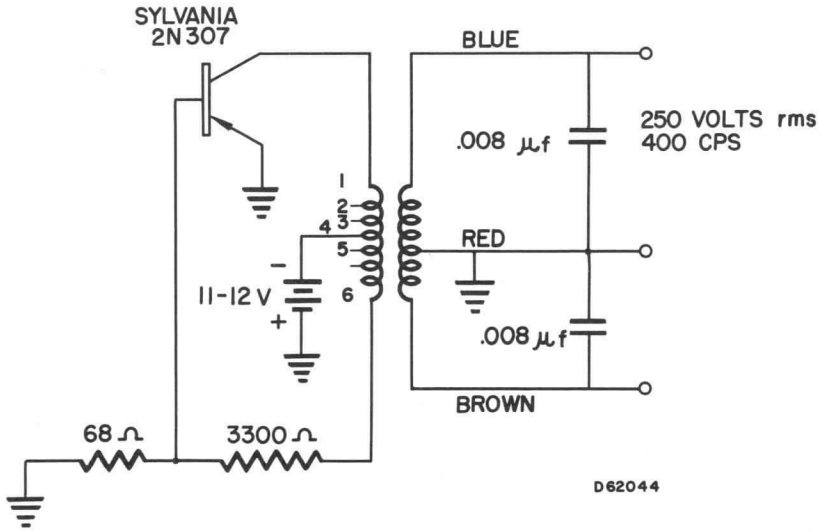

TRANSFORMER-STANCOR A-3856

MECHANICAL DATA

Construction	Glass Substrate; Neutral Density; 70 % Transmission
Dimensions	See Outline Drawing
Basing	No. 1299R Pins; K46-1101 Clips
Mounting Position	Any

MAXIMUM RATINGS

Peak Voltage	420 Volts
RMS Voltage (Sine Wave)	300 Volts
Peak Transient Voltage (Not to Exceed 0.5 Cycles at Operating Frequency)	500 Volts

TYPICAL OPERATING CONDITIONS

RMS Voltage	250 Volts
Frequency	400 cps
Power (All Segments Energized)	325 mW
Current (All Segments Energized)	5.5 ma
Power Factor	0.2
Light Output	10 Ft. Lamberts

NOTES:

1. *It is recommended that this device be operated from a minimum source impedance of 6.8K ohms.*
2. *All five common connector pins should be tied together.*

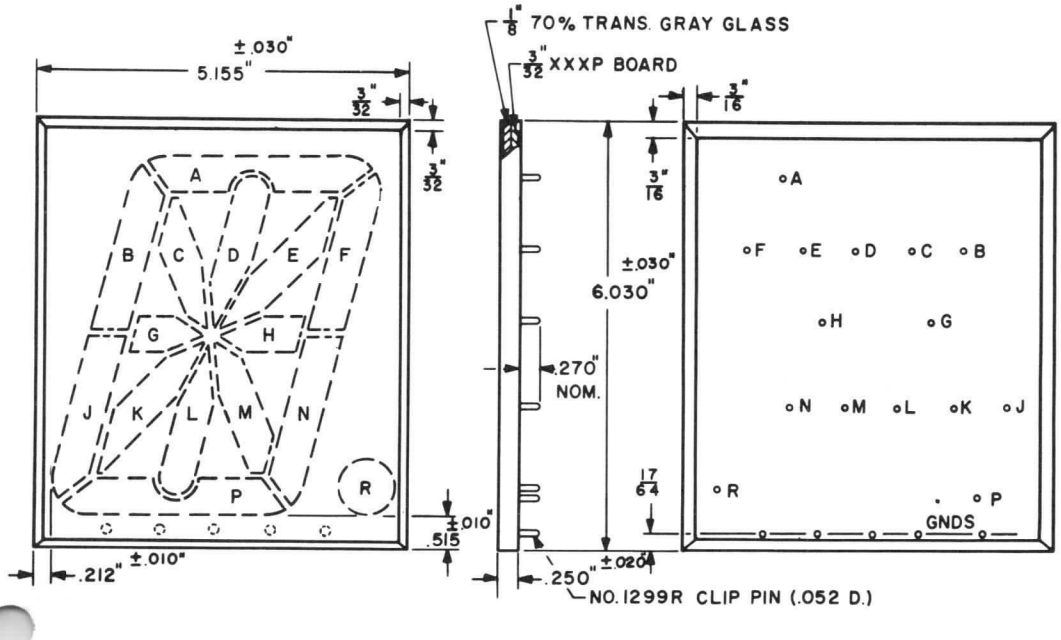

QUICK REFERENCE DATA

The Sylvania Type AN501 is an electroluminescent alpha-numeric display device. It features 14 segments in a character height of 5″. Combinations of segments may be lighted to form all letters in the alphabet as well as the numbers 0 thru 9 and some symbols. The device features wide viewing angle, minimal catastrophic failure and extremely low power consumption.

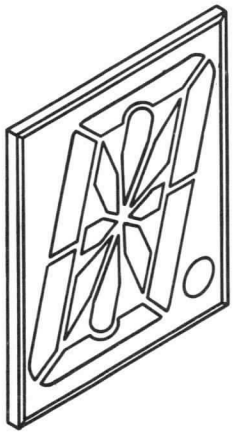

SYLVANIA
ELECTRONIC TUBES

A Division of
Sylvania Electric Products Inc.

PICTURE TUBE
OPERATIONS

SENECA FALLS, NEW YORK

Prepared and Released By The
TECHNICAL PUBLICATIONS SECTION
EMPORIUM, PENNSYLVANIA

MARCH, 1963

File Under
ELECTROLUMINESCENT DEVICES

LIGHT OUTPUT VS. VOLTAGE AND FREQUENCY

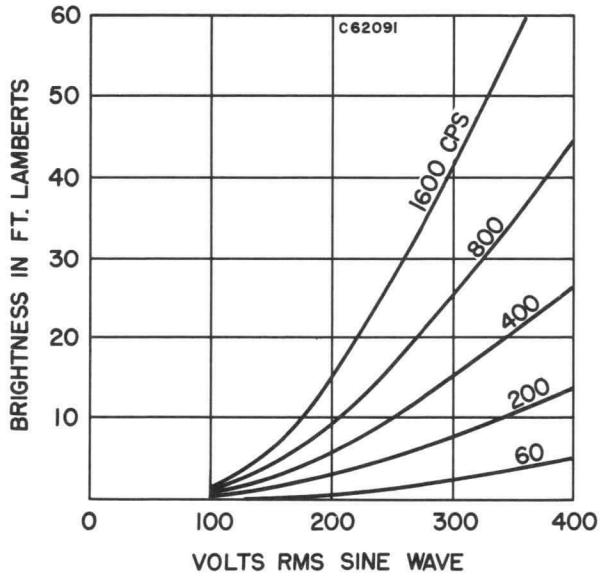

TYPICAL SPECTRAL ENERGY EMISSION CHARACTERISTICS

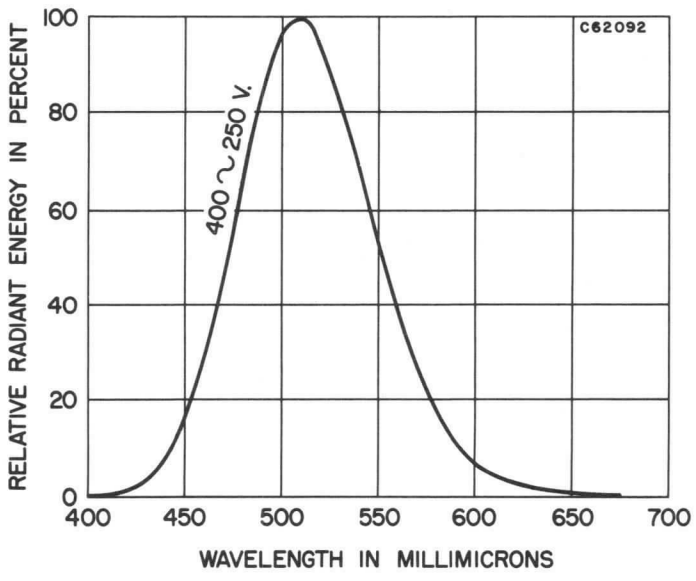

TYPICAL TRANSISTORIZED POWER SUPPLY

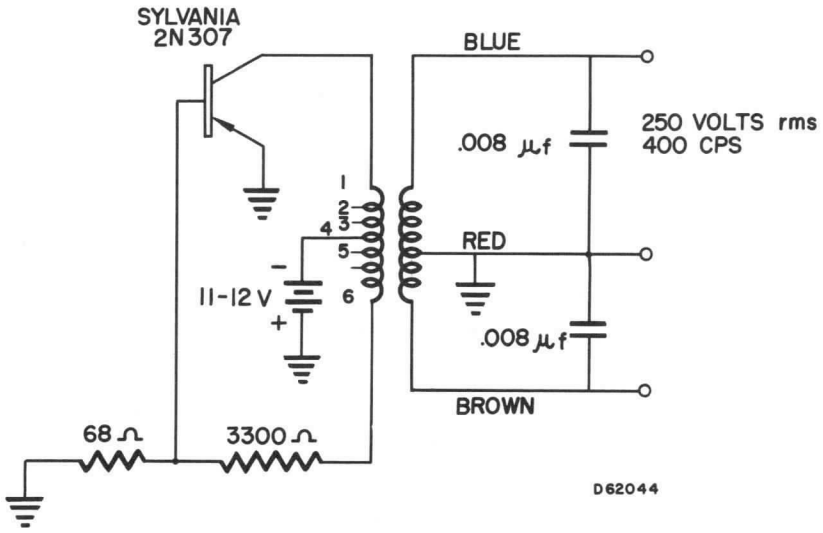

TRANSFORMER–STANCOR A-3856

MECHANICAL DATA

Construction	Glass Substrate; Neutral Density; 70 % Transmission
Dimensions	See Outline Drawing
Basing	No. 1299R Pins; K46-1101 Clips
Mounting Position	Any

MAXIMUM RATINGS

Peak Voltage	420 Volts
RMS Voltage (Sine Wave)	300 Volts
Peak Transient Voltage (Not to Exceed 0.5 Cycles at Operating Frequency)	500 Volts

TYPICAL OPERATING CONDITIONS

RMS Voltage	250 Volts
Frequency	400 cps
Power (All Segments Energized)	0.250 Watts
Current (All Segments Energized)	5.5 ma
Power Factor	0.2
Light Output	10 Ft. Lamberts

NOTES:

1. *It is recommended that this device be operated from a minimum source impedance of 10K ohms.*
2. *All five common connector pins should be tied together.*

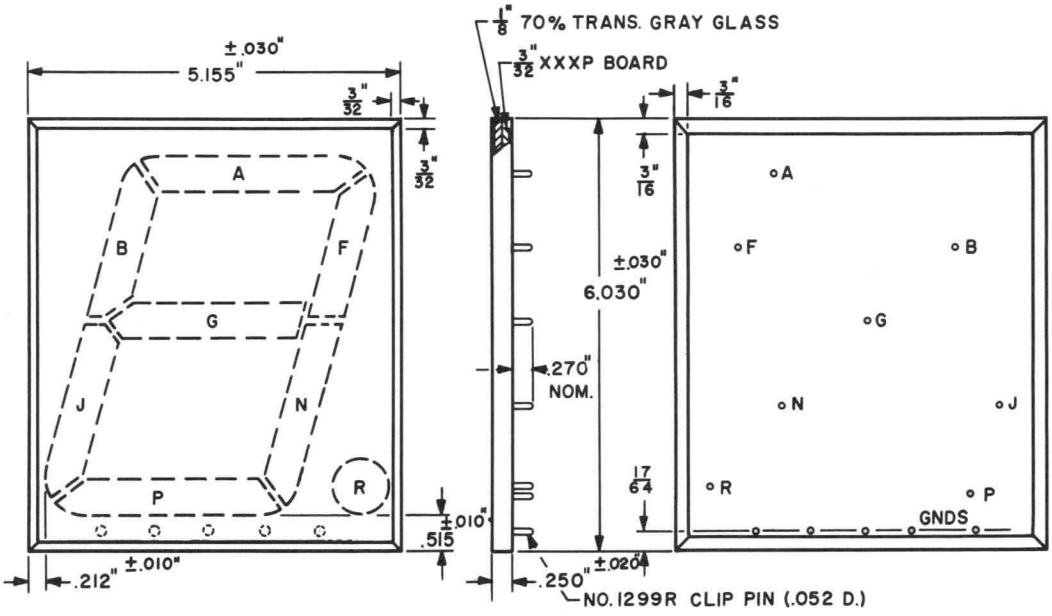

QUICK REFERENCE DATA

The Sylvania Type NU501 is an electroluminescent numeric display device. It features 7 segments, plus a decimal point, in a character height of 5″. Combinations of segments may be lighted to form all the numbers from 0 to 9. The device features wide viewing angle, minimal catastrophic failure and very low power consumption.

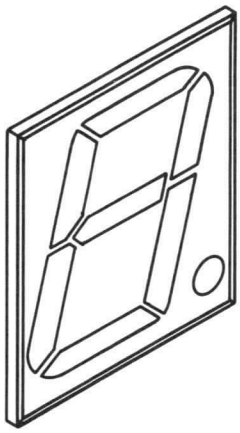

SYLVANIA
ELECTRONIC TUBES

A Division of
Sylvania Electric Products Inc.

PICTURE TUBE
OPERATIONS

SENECA FALLS, NEW YORK

Prepared and Released By The
TECHNICAL PUBLICATIONS SECTION
EMPORIUM, PENNSYLVANIA

MARCH, 1963

File Under
ELECTROLUMINESCENT DEVICES

LIGHT OUTPUT VS. VOLTAGE AND FREQUENCY

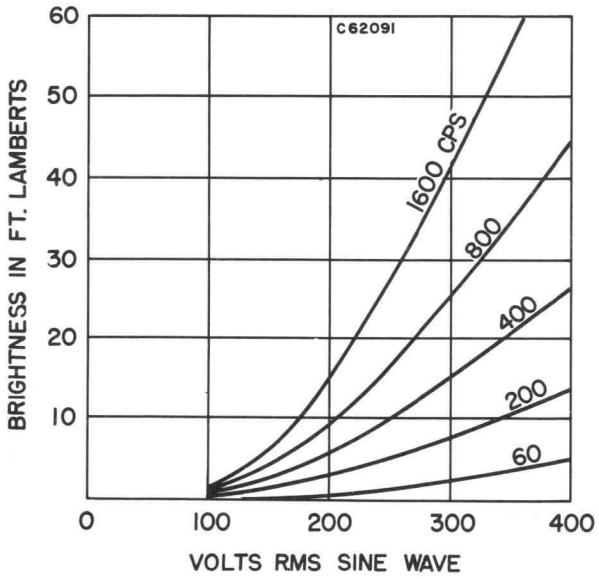

TYPICAL SPECTRAL ENERGY EMISSION CHARACTERISTICS

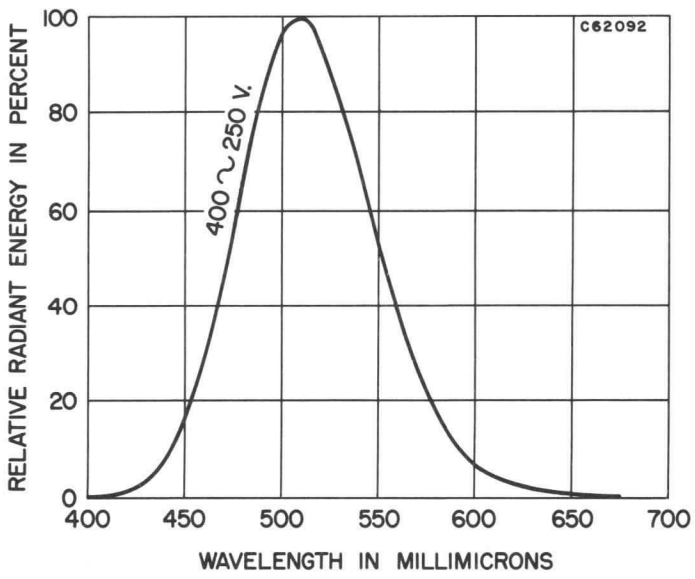

TYPICAL TRANSISTORIZED POWER SUPPLY

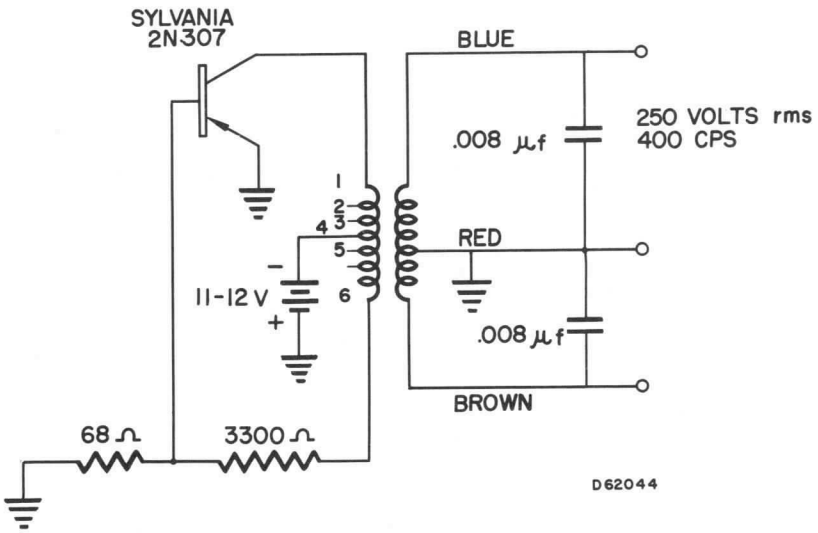

TRANSFORMER – STANCOR A-3856

MECHANICAL DATA

Construction	Glass Substrate; Neutral Density; 70 % Transmission
Dimensions	See Outline Drawing
Basing	No. 1299R Pins; K46-1101 Clips
Mounting Position	Any

MAXIMUM RATINGS

Peak Voltage	420 Volts
RMS Voltage (Sine Wave)	300 Volts
Peak Transient Voltage (Not to Exceed 0.5 Cycles at Operating Frequency)	500 Volts

TYPICAL OPERATING CONDITIONS

RMS Voltage	250 Volts
Frequency	400 cps
Power (All Segments Energized)	450 mW
Current (All Segments Energized)	6.6 ma
Power Factor	0.2
Light Output	10 Ft. Lamberts

NOTES:

1. *It is recommended that this device be operated from a minimum source impedance of 6.8K ohms*
2. *All six common connector pins should be tied together.*

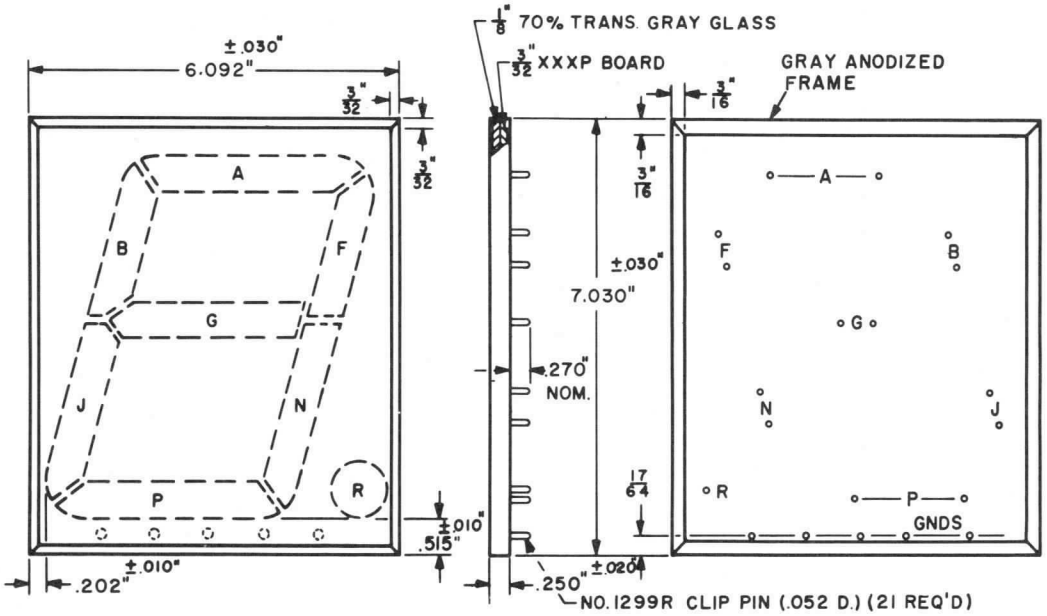

QUICK REFERENCE DATA

The Sylvania Type NU601 is an electroluminescent numeric display device. It features 7 segments, plus a decimal point, in a character height of 6″. Combinations of segments may be lighted to form all the numbers from 0 thru 9 in addition to some symbols. The device features wide viewing angle, minimal catastrophic failure and very low power consumption.

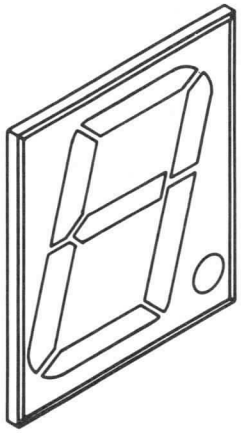

SYLVANIA
ELECTRONIC TUBES

A Division of
Sylvania Electric Products Inc.

PICTURE TUBE
OPERATIONS

SENECA FALLS, NEW YORK

Prepared and Released By The
TECHNICAL PUBLICATIONS SECTION
EMPORIUM, PENNSYLVANIA
SEPTEMBER, 1962

File Under
ELECTROLUMINESCENT DEVICES

LIGHT OUTPUT VS. VOLTAGE AND FREQUENCY

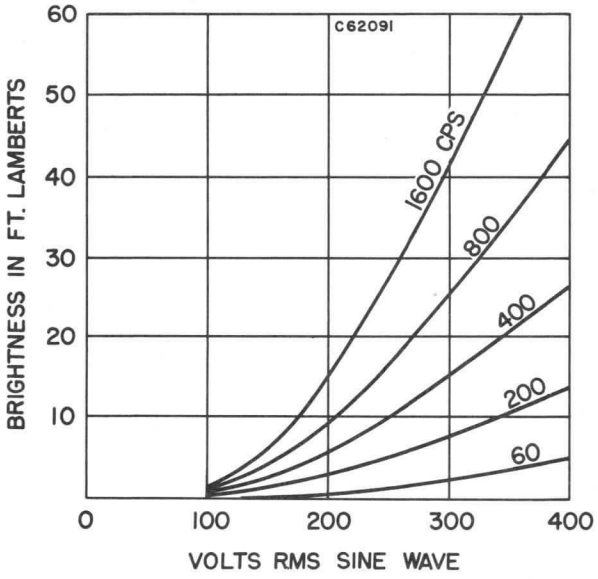

TYPICAL SPECTRAL ENERGY EMISSION CHARACTERISTICS

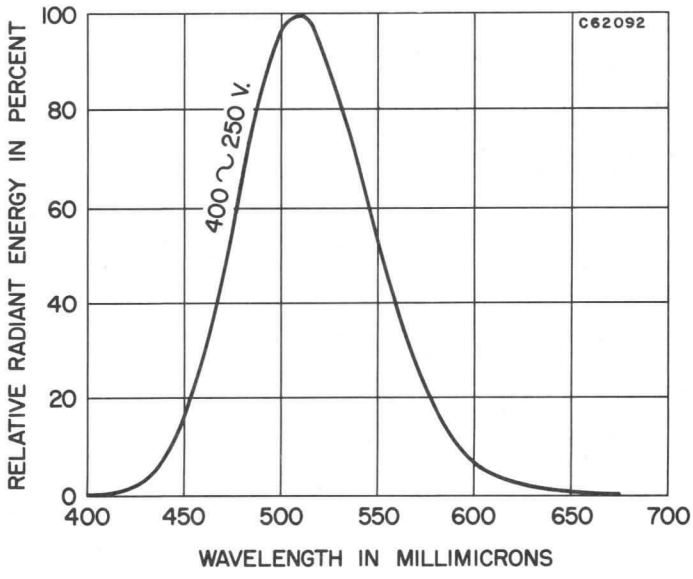

TYPICAL TRANSISTORIZED POWER SUPPLY

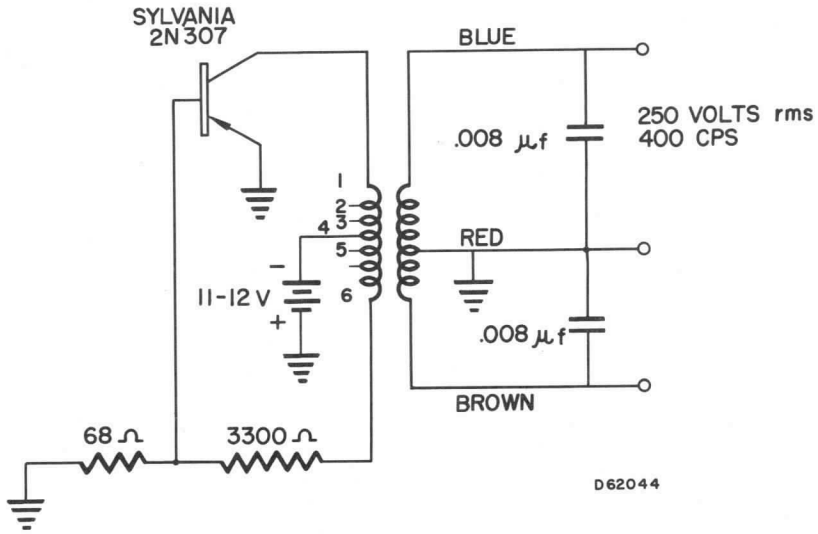

TRANSFORMER-STANCOR A-3856

MECHANICAL DATA

Construction	Glass Substrate; Neutral Density; 70 % Transmission
Dimensions	See Outline Drawing
Basing	No. 1378R Clip Pins
Mounting Position	Any

MAXIMUM RATINGS

Peak Voltage	420 Volts
RMS Voltage (Sine Wave)	300 Volts
Peak Transient Voltage (Not to Exceed 0.5 Cycles at Operating Frequency)	500 Volts

TYPICAL OPERATING CONDITIONS

RMS Voltage	250 Volts
Frequency	400 cps
Power (All Segments Energized)	0.6 Watt
Current (All Segments Energized)	13 Ma
Power Factor	0.2
Light Output	10 Ft. Lamberts

NOTE:

1. *It is recommended that this device be operated from a minimum source impedance of 27K ohms.*

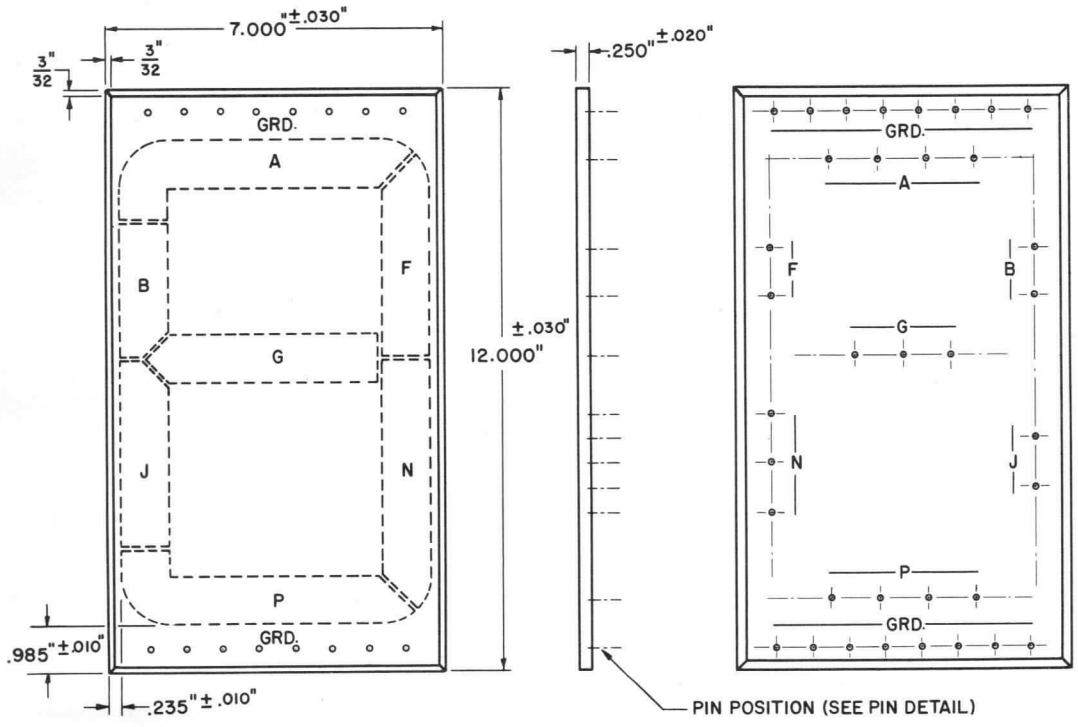

QUICK REFERENCE DATA

Electroluminescent
Numeric Display
1 Digit
7 Segment Design
0 to 9 Numerals
10″ Character Height
Compact Design
Wide Angle Viewing
Parallax Free
Fast Switching Speed
Very Low Power Consumption
Minimal Catastrophic Failure

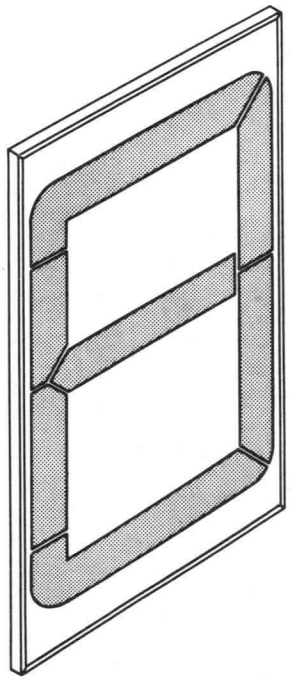

SYLVANIA ELECTRIC PRODUCTS INC.

Electronic Components Group
ELECTRONIC TUBE DIVISION
SENECA FALLS, NEW YORK

A Technical Publication

MAY, 1964

File Under

ELECTROLUMINESCENT DEVICES

PIN DETAIL

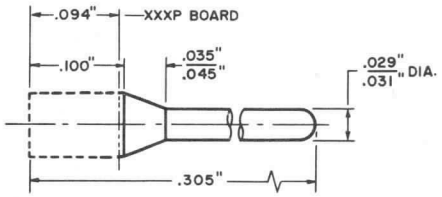

No. 1378R Clip Pin

TYPICAL TRANSISTORIZED POWER SUPPLY

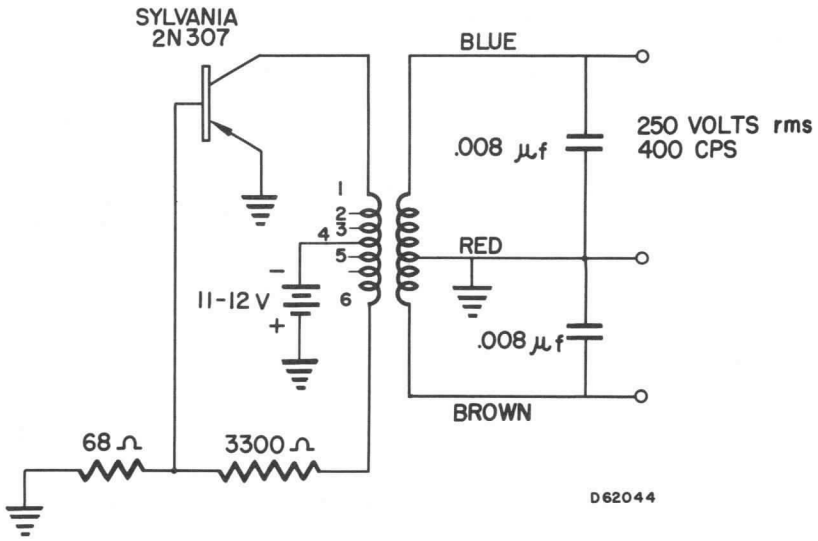

TRANSFORMER–STANCOR A-3856

LIGHT OUTPUT VS. VOLTAGE AND FREQUENCY

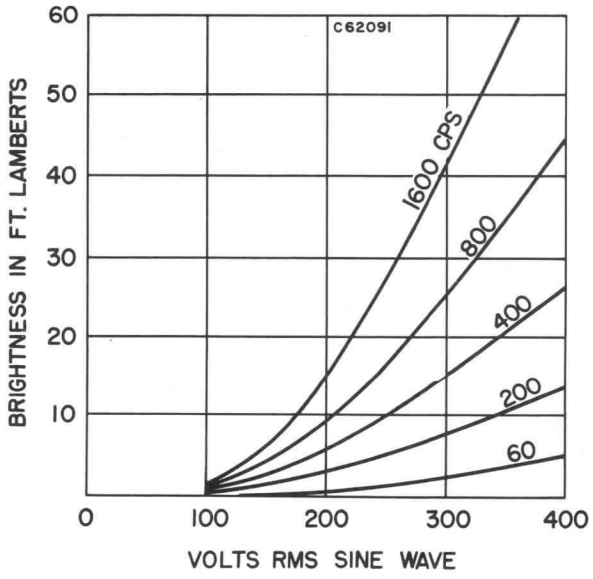
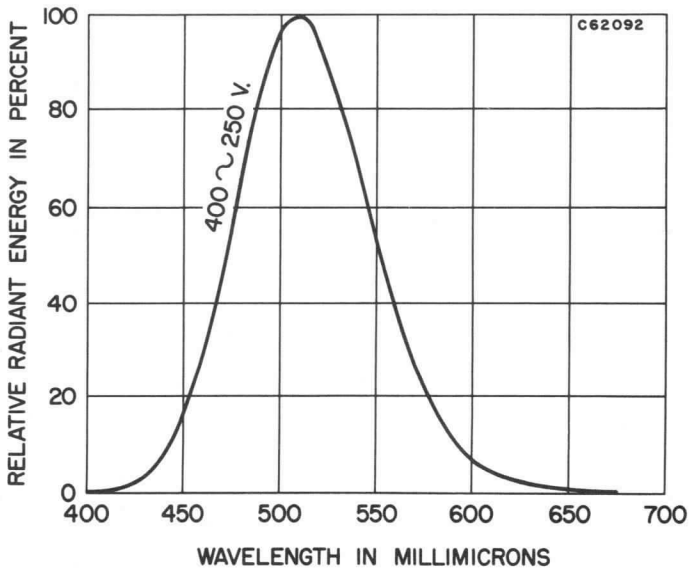
TYPICAL SPECTRAL ENERGY EMISSION CHARACTERISTICS