varian

SPECIAL TUBES COMPONENTS AND ACCESSORIES

gas switches
solid state devices
rf and if components
receivers
light sensing and emitting products
special products
accessories

volume 4

varian

DATA BOOK

VOL. 4

CAVITIES

Product Designation	Publication Number
BC-148	2250
BL-499	B1425
VA-1275	B1345
VA-1277	B1356
VA-1278	B1357
VA-1281	B1359
VA-1299	B1424

CERAMIC/METAL PRODUCTS

GAS SWITCHING TUBES

BTL-018	3037
(O)BLT-026	B1077
BLT-088	3031
BLT-101	3032
BLT-111	3033
(N)BLT-119	3592
(O)BLS-517	B1724
BTR-545A	3034
BTR-545B	3080
BTR-547	3035
(O)BTR-553	1810
(N)BTR-596	3485
BTR-639	3036
(N)BTR-673	3486
(O)VDU-1001	2222
(O)VDU-1002	2223
VDX-1006	3110
VDX-1010	2484
VDU-1011	2485
VDU-1012	2486
(N)VDX-1014	3487
VDU-1017	2487
VDU-1018	2488
VDU-1024	2489
VDU-1025	2490
VDC-1027	3111
(N)VDS-1028S	3593
VDC-1029	3112
VDX-1047	3098
VDX-1047S	3099
(N)VDX-1055	3488
(N)VDX-1057	3387
VDX-1071	3038
VDX-1080	3257
(N)VDX-1099	3472
(N)VDX-1119	3473
(N)VDX-1134	3489
(N)VDX-1135	3490
(N)VDX-1136	3491
(N)VDX-1137	3492
(N)VDX-1138	3493
(N)VDX-1142	3494
(N)VDX-1155	3695
(N)VDX-1157	3696
6624	3029
6795	3030
6795A	3085
VFS-9501	3275
VFX-9503	3276
VFX-9506	3277
(N)VFX-9513	3388
(O)High-Power Limiter	5/69

HIGH POWER FILTERS

(O)FC3JA1	1728
F112AA1	2824
(N)F112CA12/F112CA13	3630
(O)F112DA1	6/66
(O)F112FA2	6/66
F137AA3	1860
F137AA4	1868
F137AA6	1865
(N)F137AA7	3471
(O)F137DA2	1668
(O)F187AA2	1721
(O)F187CA1	2827
F187CA2	6/66
F284AA1	2471
(R)F284AA11/12	3571
(N)F284AA15	3604
(N)F284AB15	3605
(R)F284BA1	2828
(O)F284FA2	6/66
(O)F284GA2	2829
(O)F284GA3	2830
(O)F284HA1	1717
(N)F284PA3	3559
(O)F430CA7	6/66
(O)F650AA1	1664
(N)F650AA15	3501
(O)F650DA1	1718
(N)F650DA6	3595
(O)F650HA2	1670
(O)F2100AA1	6/66

HIGH POWER WATERLOADS

LC3EA3	2265
LC6EA1/LC6EA2	2277
(O)L90DA1	1663
L112BB5	2038
(N)L112BC7	3591
(O)L112DA1	1574
L112FA1	2500
L137AA5	2041
L137BB5	2267
L137BB9	2083
L137BC2	2039
L159AA2	2040
(O)L284AA7	1729
(O)L284BA3	1730
(O)DS4001	1673
(O)V-4030A	2834
(O)V-4030B	2832
(O)V-4030-30B	2833

IF COMPONENTS

ITLM	3082
ICP-1	2568
ITV-1	3081
ITM-2	2498
ITF-4	2916
(N)ICL-6-160-80	3643
ITL-7	2901
ITA-34	1968
MIF-8394	2913

INDUSTRIAL POWER PACKS & WAVEGUIDE COMPONENTS

LIGHT SENSING AND EMITTING DEVICES

(R)VPM-159, VPM-164	3631

MIXERS AND MODULATORS

Product Designation	Publication Number
(O)V-8302	2232
(R)V-8302B	3144
(R)V-8303	3145
(R)V-8306	3146
(R)V-8308B	3147
(R)V-8309	3148
(R)V-8314	3587
(N)V-8320	3327
(O)V-8375A/B	B1065
(O)VSZ-9716M	3205
(N)9753 Series	3674
(N)VSZ-9754	3670
(N)9755 Series	3659

MIXER-PREAMPLIFIERS

KC-7A	2969
IC-11A	3588
(N)9755A/B	3673

RECEIVERS

RF COMPONENTS

Filter Design Aid #1	2960
Filter Deisgn Aid #2	2961
OTX-1	2051
200 Series	2926
200M	3021
220	2951
300 Series	2937
BR-300	3002
300M	3020
400 Series	2938
400M	3019
(O)VCC-600	3553
(R)VZ-3002	3608
Communications Transistor Amps	3304
Thin Film Transistor Amps	3301
Radar Transistor Amplifiers	3167
Wideband Transistor Amps	3162
Medium Power Transistor Amps	3305

(N)New (R) Revised (O)Obsolete, remove

3481 8/77

Printed in U.S.A.

electron device group/611 hansen way/palo alto/california 94303

Product Designation	Publication Number
VSG-7425F	3073
VSP-7431A	3083
VSP-7431AP	3095
VSL-7441A	3078
VSL-7441AP	3096
VSL-7445C	3026
VSS-7450A	2968
VSS-7451A	3079
VSS-7451AP	3097
VSS-7451J	3132
VSS-7451JP	3133
VSS-7455A	3052
VSS-7455C	3027
(N)9721	3579
(O)VSZ-9721	3300
(O)9721H	3328
9722	3329
(N)9723	3581
(N)9724	3582
(R)9726	3583
(N)9729	3584
(N)9730	3585
VSZ-9900	2597

SOLID STATE DIODES

(O)BIMODE® Microwave Diodes	2179
(O)Super Power BIMODE® Microwave Diodes	2007
Gallium Arsenide Paramp Diodes	2212
(N)Microwave Gunn Effect Diodes	2657
(O)Silicon Paramp Varactor Diodes	2149
(O)Microwave Glass Packaged Silicon PIN Diodes	3068
(O)Microwave PIN Switching Diodes	2201
(O)Step Recovery Diodes	2048
(O)Microwave Glass Packaged Silicon Tuning Diodes	3640
(O)Diode Case Styles	2546
(O)VAO Series	3634
(O)VAO-10	2291
(O)VAS-10, VAS-20, VAS-30, VAS-40, VAS-50, VAS-60	3652

Product Designation	Publication Number
(O)VAT-10, VAT-50, VAT-60, VAT-70, VAT-90	3653
(O)VAO-20	2293
(O)VAO-30	2294
(O)VAP-80	3651
(R)VAT-110, VAT-130, VAT-140, VAT-160	3589
(R)VAP-200	3192
(O)VAT-200	3654
(O)VAD-210	3637
(O)VSD-210	2886
(O)VSD-C210	2888
(O)VAT-300	3650
(O)VSD-300/VSD-400	3638
(O)VSD-C300/VSD-C400	3639
(O)VSN-C320	3053
(O)VAB-800	3663
(O)VAB-800-2 & VAB-800A-2	3657
(O)VAB-811A-3 thru VAB-816A-3	3658
(O)VAB-900	3418
(O)VAT-1000	3200
(O)VSD-1000	3635
(O)VSD-C1000	3636
(O)VAB-1600	3259
(O)VAB-3200	3552
(N)9250 Series	3596

SOLID STATE SOURCES AND MULTIPLIERS

Varactor Tuned Gunn Effect Microwave Oscillator	3212
VSX-9001	3012
VSU-9002	3013
VSK-9004	3014
(O)VSX-9005	3201
VSC-9009	3011
VSA-9010	3003
VSQ-9021	3141
VSQ-9035	2788
(N)VSX-9037A	3625
(O)VSX-9070	2930
(O)VSX-9071	2931
VSU-9072	2932

Product Designation	Publication Number
(O)VSU-9075	2933
(O)VSU-9076	2934
VSU-9077	2935
(N)9080 Series	3310
(N)9681	3576
(N)9690	3577
(N)9691	3645
(N)9692	3578
(O)VSZ-9800/VSZ-9801	2122

SWITCHES

BL-805	B1185

TRANSMISSION LINE COMPONENTS

H62DA2	2306
(N)H62DA9	3558
(N)H90DA1	3594
H90DA2	2307
W90AA1	2404
W90BB5	2407
H112DA1	2268
H112DA2	2501
H112DA3	2269
(N)H112DA8	3561
(N)C137EA3	3554
(N)D137 Series	3407
(O)D137AA3	2470
H137DA2	2270
W137AA1	2340
W137BA3	2405
W137BA4	2406
W137BA5	1859
(N)C159GA1	3555
(N)H159DA3	3557
W187BA1	2401
H284DA1	2332
(N)H284DA6	3560
W284BC2	2403
H430DA4	2333
(N)F650AA15	3501
(N)F650DA6	3595
H650YA1	2271
(O)W975AA1	2402
(N)W975AA3	3649
(O)VC-1175A	DH20
(O)VE( )-8410	2850
(N)VUH-8426	3538
(R)VE( )-8480/VE( )-8486	3566

CAVITIES

dual mode discriminator cavities

reaction cavities

stabilizing cavities

transmission cavities

varian
electron tube and device group

TECHNICAL DATA

BC-148

HIGH-Q REACTION CAVITY

10.25-10.50 GHz

DESCRIPTION

The BC-148 is an ultra-stable, high-Q, reaction cavity for use in equipment for measuring FM noise in navigational, guidance, and tracking radar systems. This cavity, which is the heart of the noise-measuring equipment, features a unique six-way tuner lock and a calibrated micrometer for coarse frequency adjustment. When equipped with a VSK-010 constant-current, low-ripple power supply, remote electronic fine tuning can be achieved by energizing the coil-ferrite mechanism within the cavity using an external potentiometer. Careful design and selection of materials make this hermetically-sealed cavity extremely frequency stable under adverse temperature and vibration conditions.

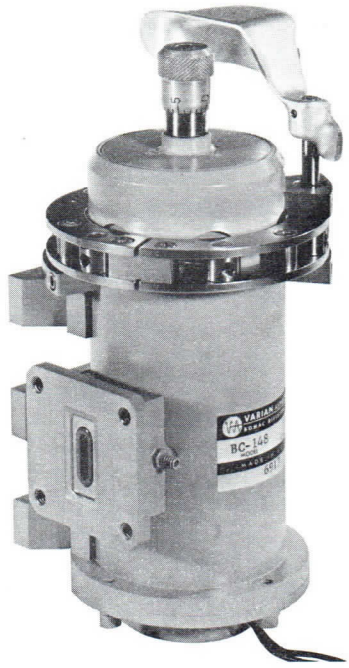

GENERAL CHARACTERISTICS[1]

ELECTRICAL

Tuning Range[2]	10.25-10.50 GHz
Loaded Q[3]	5,000
Input VSWR, max	1.2:1
Frequency/Temperature Coefficient, 0-75°C, max	13 kHz/°C
Fine Tuning, 0-5 Vdc into 15 Ω, min[4]	1 MHz
FM, per MIL-E-1, 4.9.19, max	300 Hz rms
Mode of Operation	TE-0,1,2

PHYSICAL

Dimensions	See Outline Drawing
Weight, approx	3.5 lb
Mounting Position[5]	Any
Mating Flange	UG-39/U
Micrometer Torque, max	8 lb-in

NOTES:

1. Characteristic values are based on performance tests. These figures may change without notice as a result of additional data or product refinement. Consult the Varian Solid State Division, Beverly, Massachusetts before using this information for final equipment design.
2. Versions operating at other frequency ranges can be supplied on special order.
3. Models can be furnished with a loaded Q as high as 15,000 at no extra cost.
4. When ordering, specify whether or not fine tuning is desired and whether or not the VKS-010 power supply is to be included.
5. Although the cavity may be mounted in any position, it should be installed in a position for easy micrometer reading.

2250 11/69

Printed in U.S.A.

OUTLINE DRAWING

DIMENSIONS ARE IN INCHES

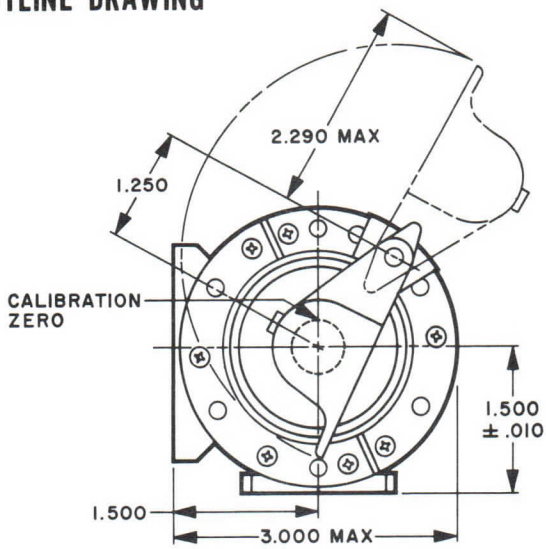

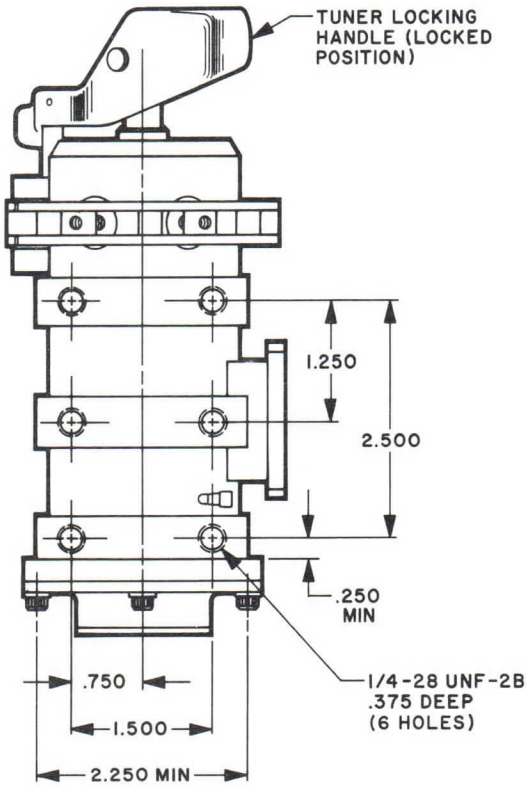

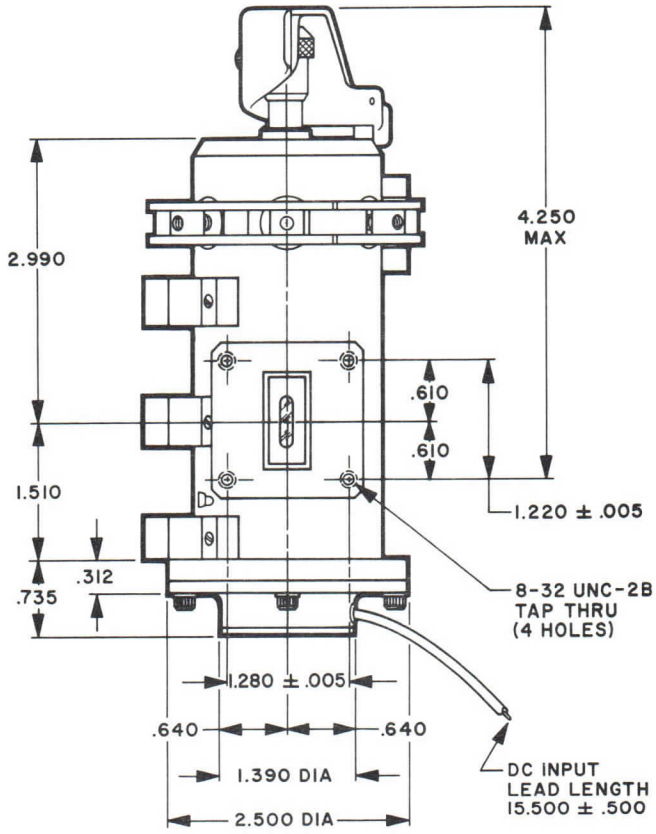

varian

DUAL-MODE CAVITY

DATA SHEET

BL-499

16.3-16.7 GHz

DESCRIPTION

The BL-499 is a tunable dual-mode cavity designed primarily to provide automatic frequency control (AFC) of electronically- or mechanically-tuned CW or pulse oscillators which operate between 16.3 and 16.7 gigahertz. It is used with two crystal detectors attached directly to each cavity output. The detectors can be supplied with the dual-mode cavity if so specified when ordering. If desired, a complete stabilized oscillator package, as shown in the schematic diagram, can be supplied.

FEATURES

- Permits simplified AFC circuitry
- Low input power
- Temperature compensation
- Accurate frequency calibration
- Light weight

AVAILABLE OPTIONS

- Direct-reading calibration
- Hermetic sealing
- Mechanical linkage for simultaneous tuning of cavity and reflex klystron
- Thirteen per cent tunability

CHARACTERISTICS

ELECTRICAL

Frequency Range, tunable ..16.3-16.7 GHz
Peak-to-Peak Frequency
Separation, ΔFp-p ..... 5 ± 0.5 MHz
Insertion Loss..... 7.5 ± 2.0 db
Loaded Q ..... 5,000 ± 600
Calibration, micrometer
vs frequency, per division.... 50 MHz
Frequency-Temperature
Coefficient, 0-85 °C ... 1 part in 10^6/°C
Frequency Stability
Short Term*, ms ..... 5 parts in 10^8
Long Term*, hrs ..... 1 part in 10^6
Input Power*, maximum ..... 10 mW

Output Voltage*, minimum,
at either F_B or F_A ..... 0.1 Vdc
Loading Resistance*, R_L ..... 10,000 Ω

PHYSICAL

Dimensions ..... See Outline Drawing
Weight ..... 8 oz
Mounting Position...Consistent with Micrometer Read-Out
Input and Output
Connectors ..... Mate with UG-419/U Flange

* Requirements and performance of complete stabilized oscillator as supplied by Varian.

Pub. B1425 4/66

Printed in U.S.A.

AFC NETWORK

The heart of this AFC network is the tunable, direct-reading, dual-mode cavity. Its two outputs, each with a crystal detector, transmit different frequencies about 5 MHz apart. This frequency difference is maintained over the cavity tuning range. Cavity calibration is based on the crossover frequency. The higher-frequency crystal develops a positive potential and the lower-frequency crystal develops a negative potential. Voltages from these detectors are summed in the bridge and any resultant fed to the d-c amplifier. The amplifier output voltage alters the klystron voltage to keep the klystron frequency midway between the two cavity frequencies. At any cavity setting, the klystron frequency varies no more than ±1 MHz over a temperature range of -55 to +100°C. During cavity tuning, the mechanical linkage adjusts the klystron tuner and reflector voltage simultaneously for continuous tracking. In this way, the klystron power output is stabilized at the desired frequency.

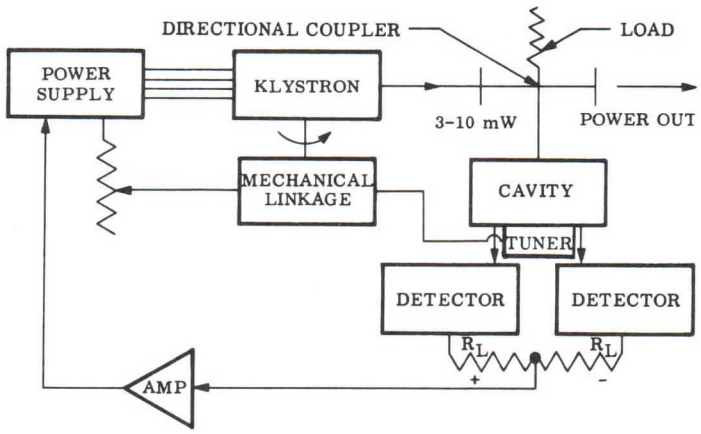

DISCRIMINATOR CURVE

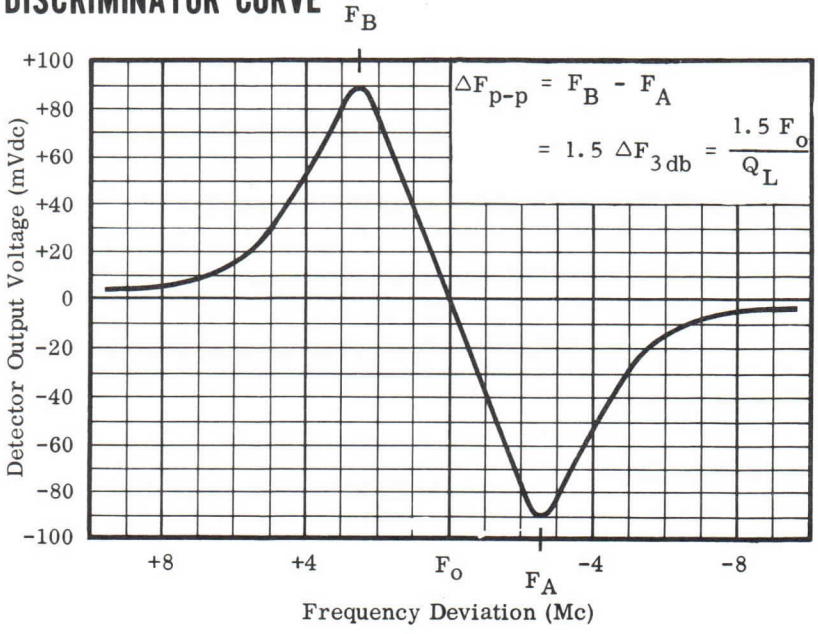

OUTLINE DRAWING

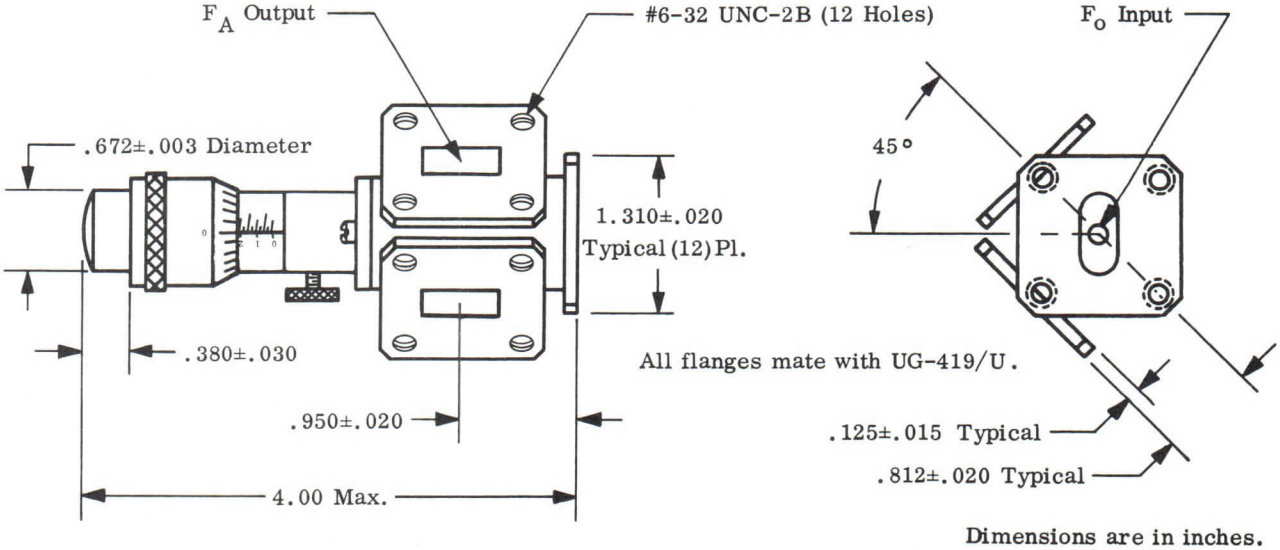

Dimensions are in inches.

VARIAN
BOMAC DIVISION

MICRODOME* STABILIZING CAVITY

DATA SHEET

VA-1275

5.4-5.9 Gc

DESCRIPTION

The VA-1275 MICRODOME Stabilizing Cavity is the C-band model of Varian Associates' new MICRODOME series of high Q resonant cavities. This series provides frequency stabilization of microwave oscillators comparable to that of earlier Varian cavities, but the new units are simpler and more rugged. In addition to their stabilization function, these transmission-type cavities isolate the oscillator from the load and serve as filters.

Both the mechanical stability and high Q of MICRODOME Stabilizing Cavities result from their configuration—a hemispherical dome atop a cylindrical sleeve which is mounted on a flat base plate. Cavity Q increases with the quotient of the internal volume and the surface area, and this volume-to-surface quotient is large with the domed shape.

When a klystron works directly into a high Q cavity, the circuit Q as seen by the electron beam is approximately the Q of the cavity alone. This results in a large increase in klystron frequency stability. A figure of merit, S, for such a system is given by the ratio of klystron modulation sensitivity to the modulation sensitivity of the klystron-cavity combination.

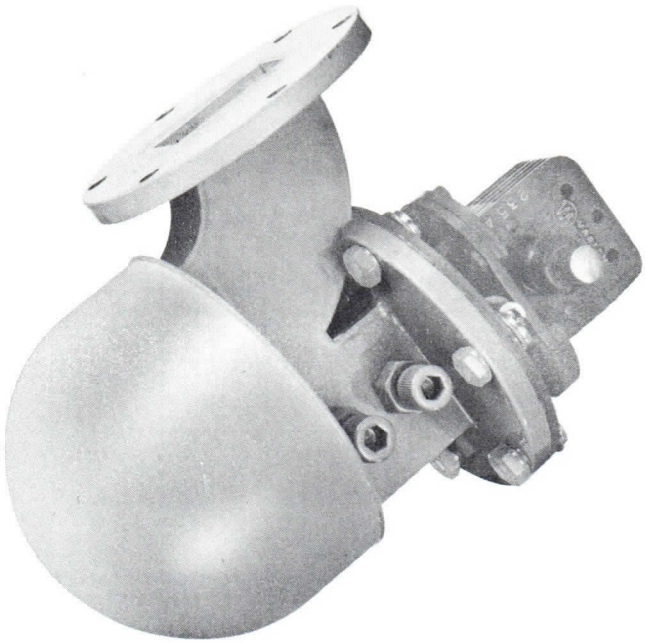

FEATURES

- High Q.
- Reliability.
- Passive and requiring only microwave excitation.
- Lightweight.
- Hermetically sealed (upon special request).
- Mechanical stability.
- Unlimited life without maintenance.
- Compact.
- Temperature-compensated.
- Tunable over a ten percent bandwidth (upon special request).

CHARACTERISTICS

ELECTRICAL

F_0 (Fixed Frequency, ±1 mc)	5.4 - 5.9 Gc
Q_0 (Unloaded Q)	25,000
L (Insertion Loss)[1]	10 db
Temperature Coefficient[2]	One part in 10^6 per °C
Frequency Stability (With VA-244 Klystron)[3]	
Short Term[4]	One part in 10^8 (milliseconds)
Long Term[4]	One part in 10^5 (hours)
Stabilization Ratio	50

PHYSICAL

Dimensions	See Outline Drawing
Weight[5]	Less than two pounds
Mounting Position	Any
Input and Output Connectors[6]	Mate with UG-344/U Flange

NOTES

1 Refer to accompanying curve relating rated minimum stabilization ratio and insertion loss. The insertion loss range can be shifted on special request.

2 Average temperature coefficient between 0°C and +100°C.

3 Please specify, "for use with tube type ....", when ordering cavity.

4 Depends upon the power supply and the external environment.

5 Weight varies slightly with frequency.

6 Input and output waveguide configuration can be supplied to customer requirements.

Additional operation and application information available upon request.

*Trademark

B1345 6/65

Printed in U.S.A.

CHARACTERISTIC CURVE

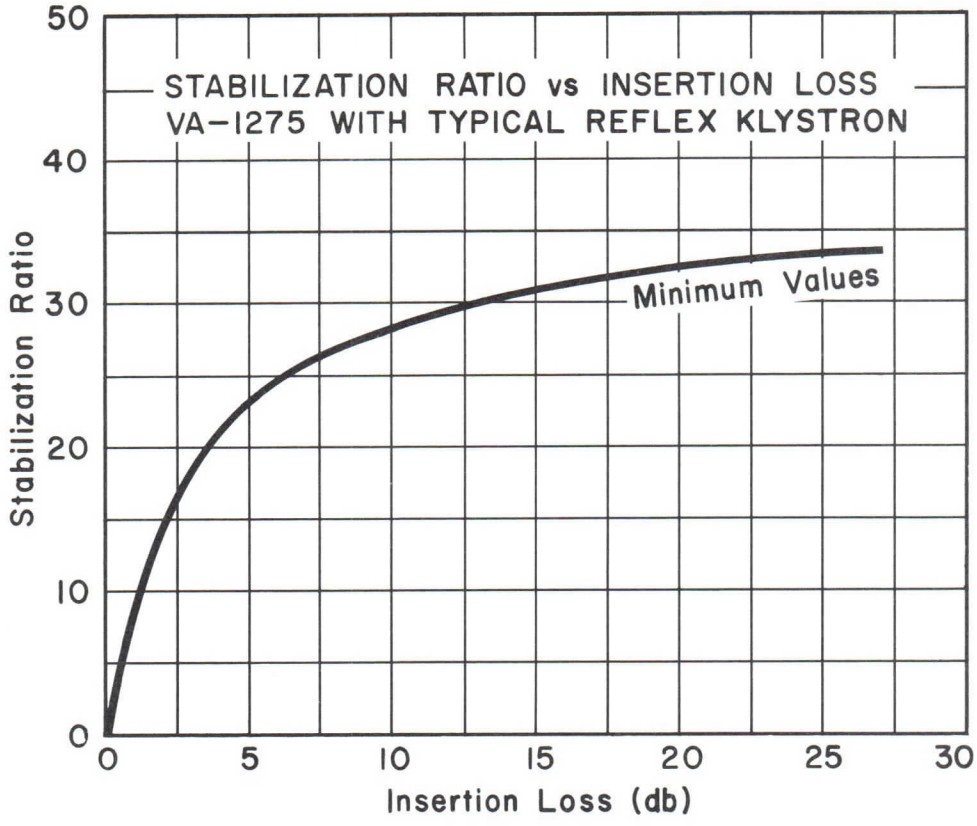

OUTLINE DRAWING

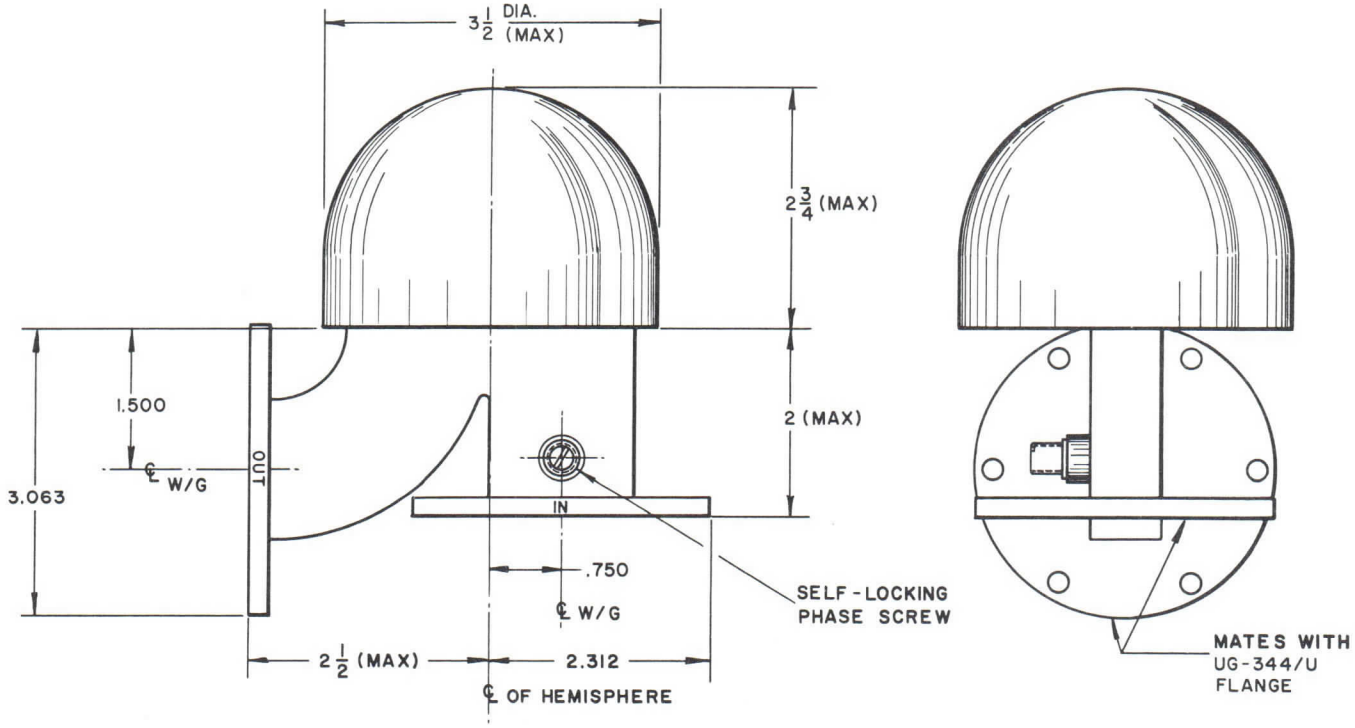

VARIAN
BOMAC DIVISION

MICRODOME* STABILIZING CAVITY

DATA SHEET

VA-1277

8.5-9.6 Gc

DESCRIPTION

The VA-1277 MICRODOME Stabilizing Cavity is the X-band model of Varian Associates' new MICRODOME series of high Q resonant cavities. This series provides frequency stabilization of microwave oscillators comparable to that of earlier Varian cavities, but the new units are simpler and more rugged. In addition to their stabilization function, these transmission-type cavities isolate the oscillator from the load and serve as filters.

Both the mechanical stability and high Q of MICRODOME Stabilizing Cavities result from their configuration—a hemispherical dome atop a cylindrical sleeve which is mounted on a flat base plate. Cavity Q increases with the quotient of the internal volume and the surface area, and this volume-to-surface quotient is large with the domed shape.

When a klystron works directly into a high Q cavity, the circuit Q as seen by the electron beam is approximately the Q of the cavity alone. This results in a large increase in klystron frequency stability. A figure of merit, S, for such a system is given by the ratio of klystron modulation sensitivity to the modulation sensitivity of the klystron-cavity combination.

FEATURES

- High Q.
- Reliability.
- Passive and requiring only microwave excitation.
- Lightweight.
- Hermetically sealed (upon special request).
- Mechanical stability.
- Unlimited life without maintenance.
- Compact.
- Temperature-compensated.
- Tunable over a ten percent bandwidth (upon special request).

CHARACTERISTICS

ELECTRICAL

F_0 (Fixed Frequency, ±2 mc)	8.5 to 9.6 Gc
Q_0 (Unloaded Q)	20,000
L (Insertion Loss)[1]	10 db
Temperature Coefficient[2]	One part in 10^6 per °C
Frequency Stability (With VA-242 Klystron)[3]	
Short Term[4]	One part in 10^8 (milliseconds)
Long Term[4]	One part in 10^5 (hours)
Stabilization Ratio	20

PHYSICAL

Dimensions	See Outline Drawing
Weight[5]	Less than 12 ounces
Mounting Position	Any
Input and Output Connectors[6]	Mate with UG-39/U Flange

NOTES

1 Refer to accompanying curve relating rated minimum stabilization ratio and insertion loss. The insertion loss range can be shifted on special request.

2 Average temperature coefficient between 0°C and +100°C.

3 Please specify, "for use with tube type ....", when ordering cavity.

4 Depends upon the power supply and the external environment.

5 Weight varies slightly with frequency.

6 Input and output waveguide configuration can be supplied to customer requirements.

Additional operation and application information available upon request.

*Trademark

B1356 6/65

Printed in U.S.A.

CHARACTERISTIC CURVE

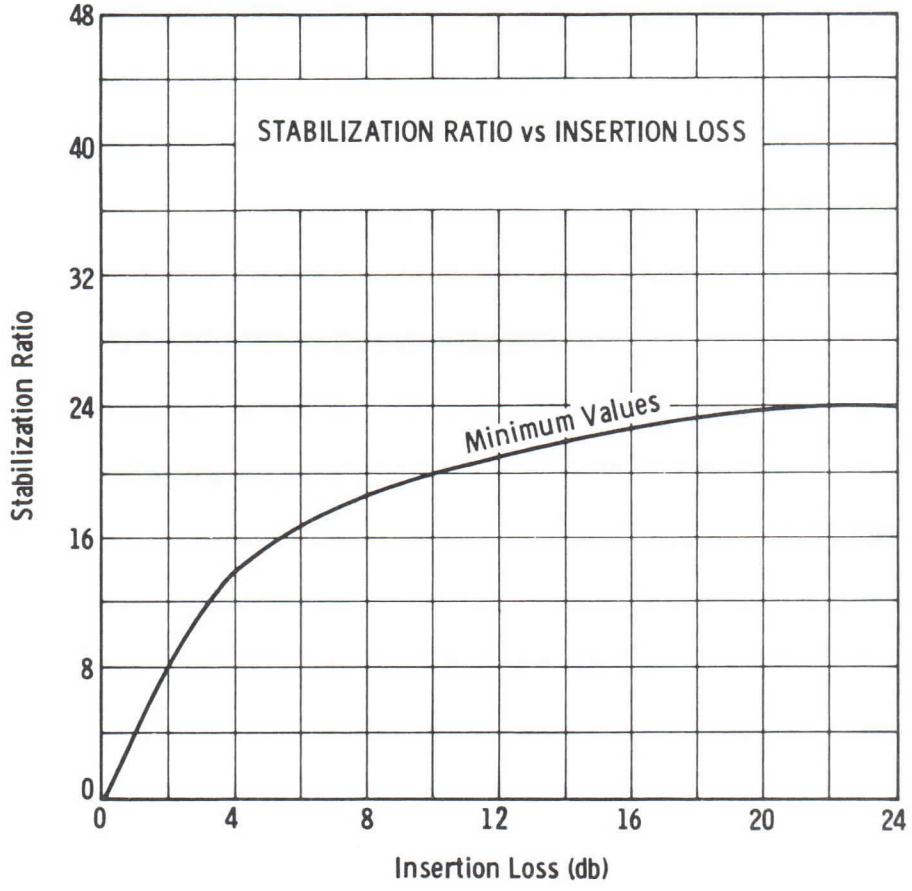

OUTLINE DRAWING

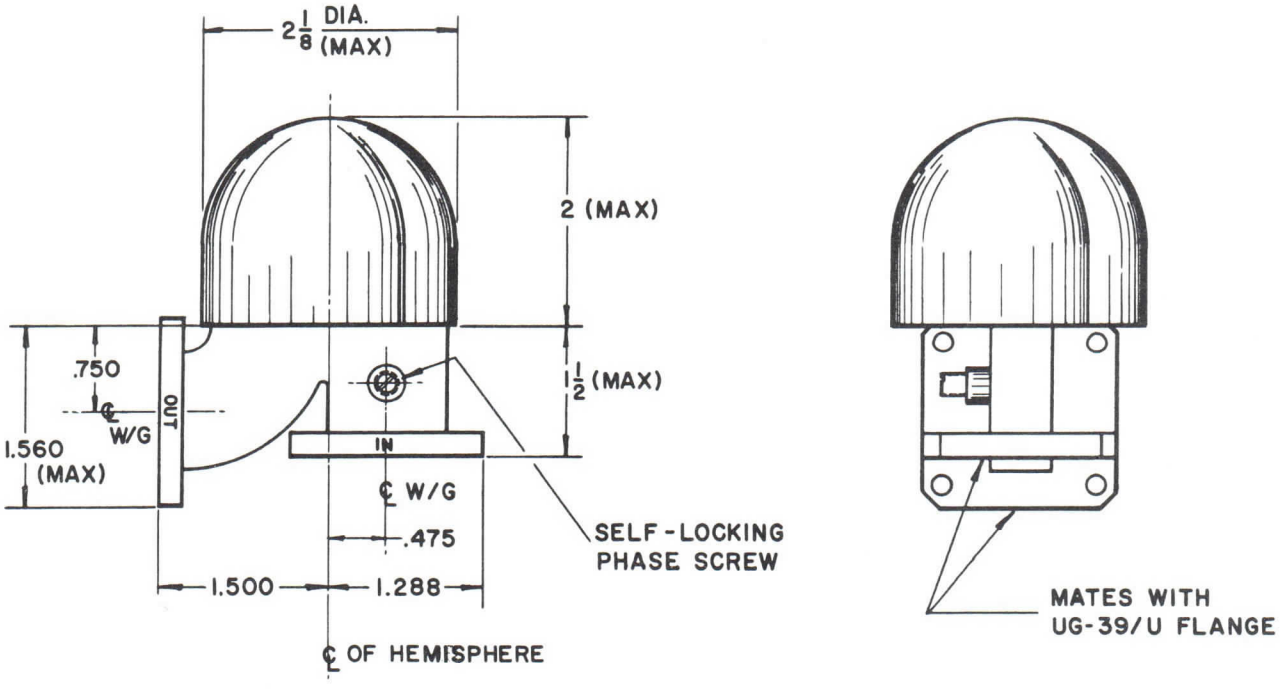

VARIAN
BOMAC DIVISION

MICRODOME* STABILIZING CAVITY

DATA SHEET

VA-1278

13-17 Gc

DESCRIPTION

The VA-1278 MICRODOME Stabilizing Cavity is the Ku-band model of Varian Associates' new MICRODOME series of high Q resonant cavities. This series provides frequency stabilization of microwave oscillators comparable to that of earlier Varian cavities, but the new units are simpler and more rugged. In addition to their stabilization function, these transmission-type cavities isolate the oscillator from the load and serve as filters.

Both the mechanical stability and high Q of MICRODOME Stabilizing Cavities result from their configuration—a hemispherical dome atop a cylindrical sleeve which is mounted on a flat base plate. Cavity Q increases with the quotient of the internal volume and the surface area, and this volume-to-surface quotient is large with the domed shape.

When a klystron works directly into a high Q cavity, the circuit Q as seen by the electron beam is approximately the Q of the cavity alone. This results in a large increase in klystron frequency stability. A figure of merit, S, for such a system is given by the ratio of klystron modulation sensitivity to the modulation sensitivity of the klystron-cavity combination.

FEATURES

- High Q.
- Reliability.
- Passive and requiring only microwave excitation.
- Lightweight.
- Hermetically sealed (upon special request).
- Unlimited life without maintenance.
- Compact.
- Temperature-compensated.
- Mechanical stability.

CHARACTERISTICS

ELECTRICAL

VA-1278	
F_o (Fixed Frequency, ±4 mc)	15 - 17 Gc
VA-1278C	
F_o (Fixed Frequency, ±3 mc)	13 - 15 Gc
Q_o (Unloaded Q)	15,000
L (Insertion Loss)[1]	10 db
Temperature Coefficient[2]	One part in 10^6 per °C
Frequency Stability (With VA-246 or VA-94 Klystron)[3]	
Short Term[4]	One part in 10^8 (milliseconds)
Long Term[4]	One part in 10^5 (hours)
Stabilization Ratio	15

PHYSICAL

Dimensions	See Outline Drawing
Weight[5]	Less than two pounds
Mounting Position	Any
Input and Output Connectors[6]	Mate with UG-419/U Flange

Additional operation and application information available upon request.

NOTES —See page 2

*Trademark

B1357 6/65

Printed in U.S.A.

NOTES

1 Refer to accompanying curve relating rated minimum stabilization ratio and insertion loss. The insertion loss range can be shifted on special request.

2 Average temperature coefficient between 0°C and +100°C.

3 Please specify, "for use with tube type .....", when ordering cavity.

4 Depends upon the power supply and the external environment.

5 Weight varies slightly with frequency.

6 Input and output waveguide configuration can be supplied to customer requirements.

CHARACTERISTIC CURVE

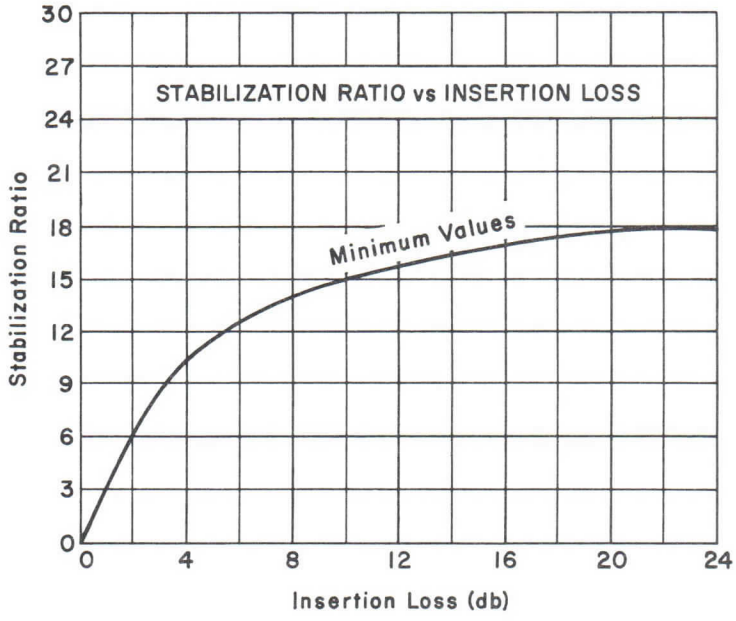

OUTLINE DRAWING

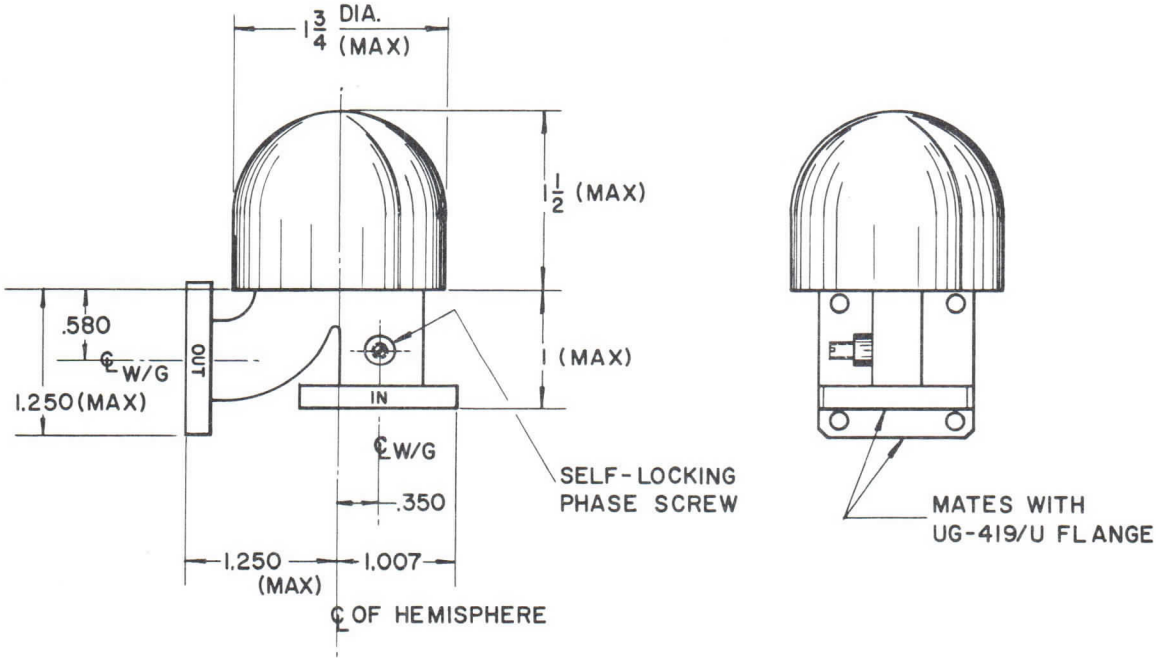

VARIAN
BOMAC DIVISION

HIGH-Q STABILIZING CAVITY

DATA SHEET

VA-1281 Series

8.5-9.6 Gc

DESCRIPTION

The VA-1281 is the basic model of Varian Associates' X-Band series high-Q cavity resonators. Rigid brazed and welded construction is used throughout. All adjustments are provided with lock nuts for stable, non-microphonic operation. The VA-1281 has many applications when used as a frequency stabilizing device with reflex klystron oscillators such as the Varian VA-217C or the VA-203B. Among these are uses in klystron transmitters, airborne receiver local oscillators, and missile guidance systems. Stabilization is achieved by the cavity's reaction on the klystron pulling factor.

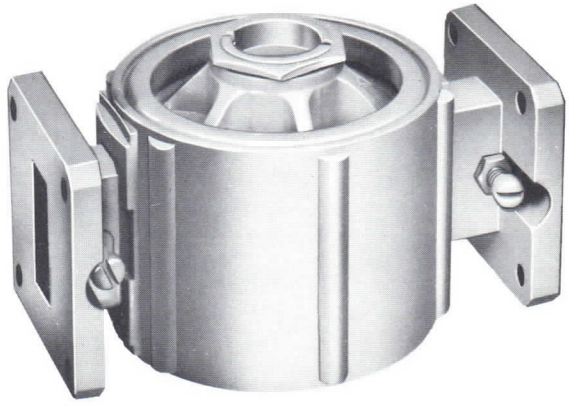

FEATURES

- Excellent frequency stability.
- Rigid ribbed construction.
- Very light weight and small size.
- Temperature compensated.
- Trim tuning adjustment.
- Adjustment screws with lock nuts.

CHARACTERISTICS

ELECTRICAL

F_0 (available center frequencies)	8.5 - 9.6 Gc
Tuning Range	± 50 Mc
Q_0 (unloaded Q)	20,000
L (insertion loss)[1]	9 to 18 db
Temperature Coefficient[2]	1 part in 10^6/°C
Frequency Stability (with VA-217C klystron)[3]	
Short Term*	1 part in 10^8
Long Term*	1 part in 10^4
Stabilization Ratio[1]	20
Mode of Operation	$TE_{0,1,1}$

*Depends on the power supply circuitry and the external environment.

MECHANICAL

Dimensions	See Specification Drawing
Weight[4] (at F_0 = 9350 Mc)	1.2 lb.
Mounting Position	Any
Input Connector	Mates with UG-39/U or UG-40A/U flange
Output Connector	Mates with UG-39/U or UG-40A/U flange

Tuning, Input coupling, Output coupling, Input phase, and Output phase adjustments are made by means of slotted screws. Lock nuts are provided.

(When requested on purchase order, adjustments will be preset and locked to customer specifications.)

NOTES:

1. Refer to curve relating rated minimum stabilization ratio and insertion loss. The insertion loss range can be shifted on special request.
2. Average temperature coefficient between 0°C and +100°C.
3. Please specify, "for use with tube type ....." when ordering cavity.
4. Weight varies slightly with frequency.

Additional operation and application information available upon request.

B1359 6/65

Printed in U.S.A.

VA-1281

CHARACTERISTIC CURVES

All curves are average values

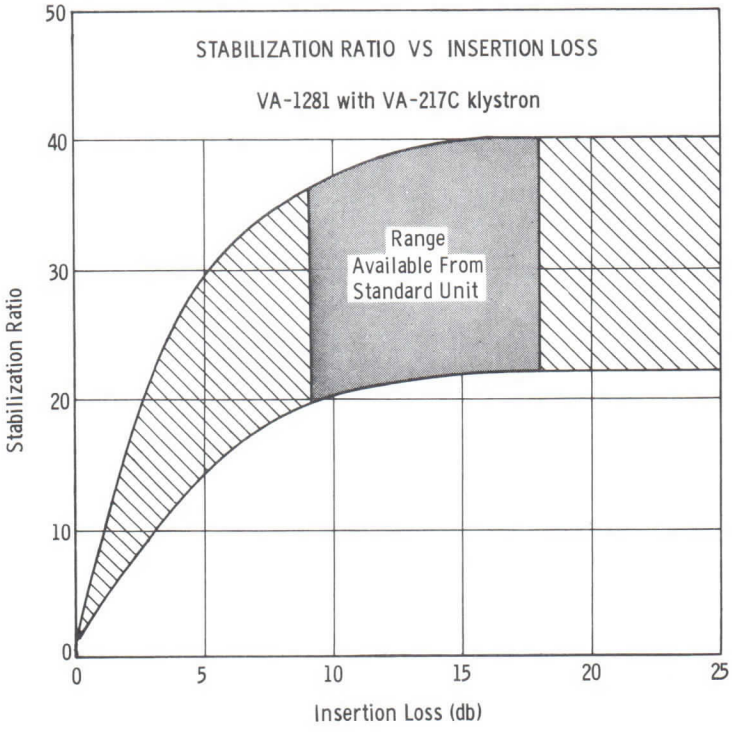

OUTLINE DRAWING

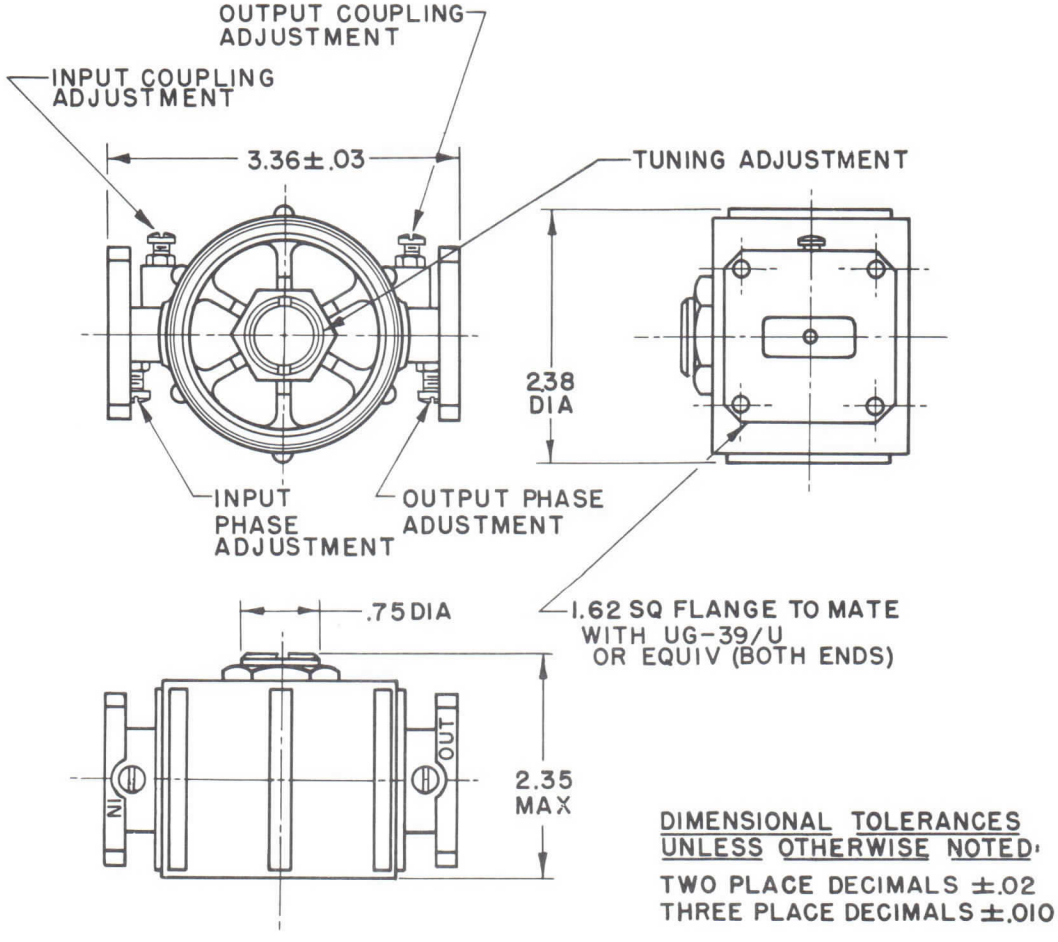

DIMENSIONAL TOLERANCES UNLESS OTHERWISE NOTED:

TWO PLACE DECIMALS ±.02
THREE PLACE DECIMALS ±.010

VARIAN associates

BOMAC DIVISION

HIGH-Q STABILIZING CAVITY

DATA SHEET

VA-1299 Series

8.5 - 9.6 Gc

DESCRIPTION

The VA-1299 is the basic model of Varian Associates' X-band series of hermetically sealed and evacuated high Q cavity resonators. These cavities provide frequency stabilization of microwave oscillators under conditions of variable pressure as well as variable temperature. Rigid brazed and welded construction is used throughout. A sealed and insulated probe is provided for checking the vacuum quality. Convenient tabs assure firm mounting into the waveguide system. All adjustments are provided with lock nuts for stable, non-microphonic operation.

The VA-1299 has many applications when used as a frequency stabilizing device with reflex klystron oscillators such as the Varian VA-217C or the VA-203B. Among these are uses in klystron transmitters, airborne receiver local oscillators, and missile guidance systems.

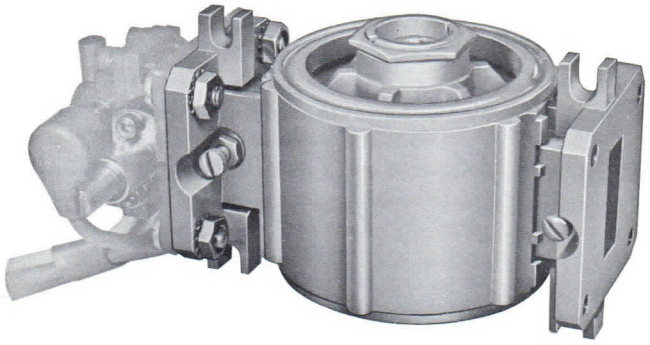

VA-1299
SHOWN WITH 217C KLYSTRON

FEATURES

Excellent frequency stability . . . Rigid ribbed construction . . . Hermetically sealed and evacuated . . . Convenient vacuum detector . . . Very light weight and small size . . . Temperature compensated . . . Trim tuning adjustment . . . Adjustment screws with lock nuts.

CHARACTERISTICS

ELECTRICAL

Fo (available center frequencies)	8.5 to 9.6 kMc
Tuning range	±15 Mc
Qo (unloaded Q)	18,000
L (insertion loss)[1]	7 to 13 db
Frequency stability (with VA-217C klystron)[2]	
Short term*	1 part in 10^8
Long term*	1 part in 10^4
Temperature Coef.	5 parts in 10^7/°C
Stabilization ratio	20[1]
Mode of operation	$TE_{0,1,1}$

*Depends on the power supply circuitry and the external environment.

MECHANICAL

Dimensions	per outline drawing, page 2
Weight[3] (At Fo = 9350 Mc)	18 oz.
Mounting	per outline drawing, page 2
Mounting position	Any
Input and Output Connectors	mate with UG-39/U or equivalent

Tuning, Input coupling, Output coupling, Input phase, and Output phase adjustments are made by means of slotted screws. Lock nuts are provided.

(When requested on purchase order, adjustments will be preset and locked to customer specifications.)

NOTES

1. Refer to curve relating per cent of rated minimum stabilization ratio and insertion loss on the next page.
2. Please specify: "for use with tube type....." when ordering cavity.
3. Weight varies slightly with frequency.

Additional operation and application information available upon request

Pub. B1424 12/65

Printed in U.S.A.

CHARACTERISTIC CURVE

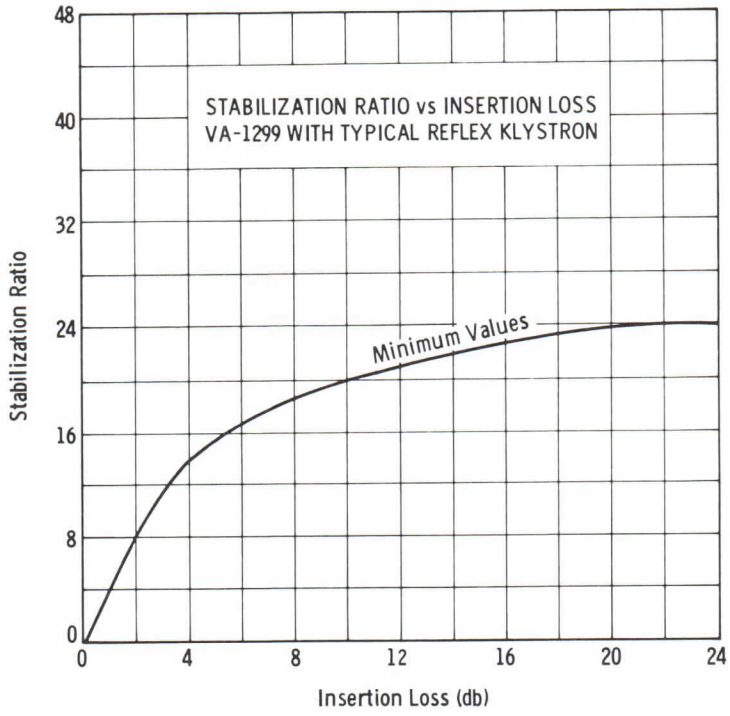

OUTLINE DRAWING

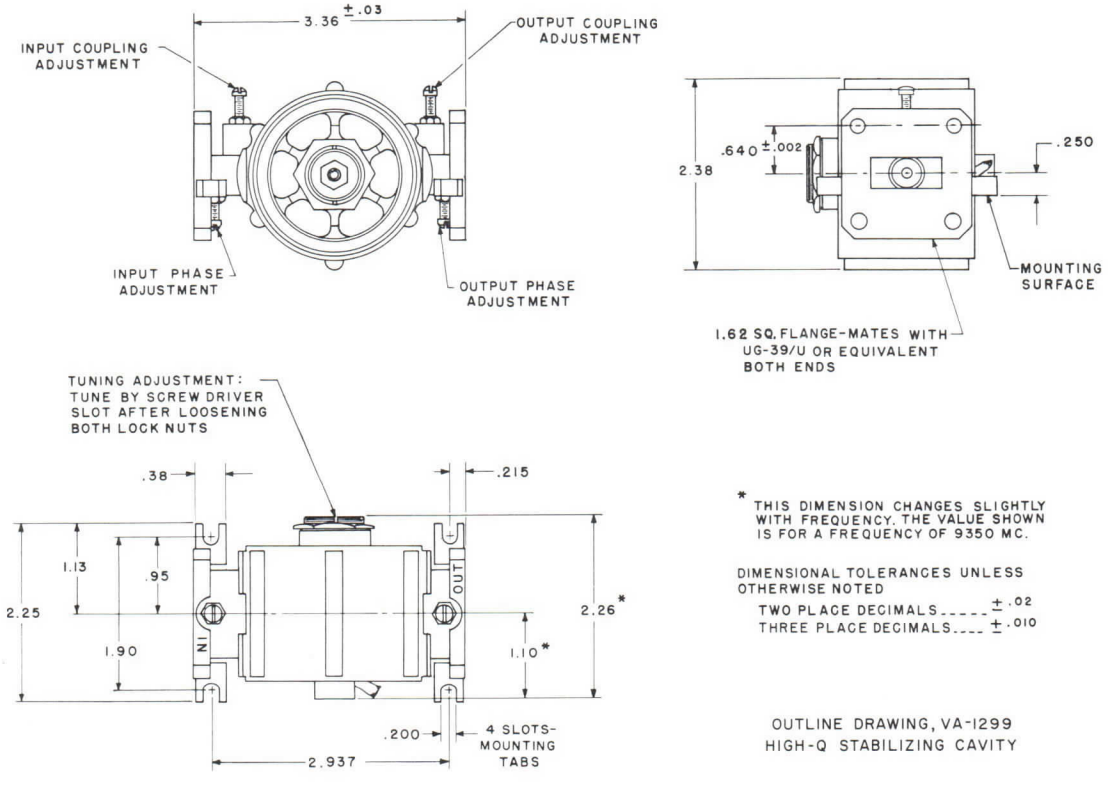

* THIS DIMENSION CHANGES SLIGHTLY WITH FREQUENCY. THE VALUE SHOWN IS FOR A FREQUENCY OF 9350 MC.

DIMENSIONAL TOLERANCES UNLESS OTHERWISE NOTED
TWO PLACE DECIMALS ..... ±.02
THREE PLACE DECIMALS .... ±.010

OUTLINE DRAWING, VA-1299
HIGH-Q STABILIZING CAVITY

CERAMIC/METAL PRODUCTS

GAS SWITCHING TUBES

atr's

tr's

tr limiters

crystal protectors

shutters

varian
eastern tube division

TECHNICAL DATA

BTL-018

SINGLE TR LIMITER

9.325-9.575 GHz

DESCRIPTION

The BTL-018 is a single bandpass TR Limiter (TRL) which operates in the frequency range of 9.325 to 9.575 gigahertz. This X-band receiver protector provides low leakage power for receiver protection. This device was designed specifically for use in the RDR-1E weather radar. Operating life expectancy is greater than 2000 hours.

GENERAL CHARACTERISTICS[1]

ELECTRICAL

Frequency Range	9.325-9.575 GHz
Peak Power	10 kW
Duty Cycle	0.001
Recovery Time, max	10 μs
Spike Leakage, max	0.06 erg
Flat Leakage, max	40 mW
Insertion Loss	0.9 dB
Ignitor Open Circuit Voltage, min	-700 Vdc
Ignitor Voltage Drop	175-375 Vdc
VSWR	1.4:1

PHYSICAL

Dimensions	See Outline Drawing
Weight, approx	8 oz
Mating Flanges	UG-135/U or equivalent

ENVIRONMENTAL

Altitude	70,000 ft
Vibration, 50 ± 2 Hz	15 G
Pressurization	30 lbf/in²g
Operating Temperature	-40 to +70 °C

TYPICAL OPERATING CONDITIONS[1]

Frequency Range	9.325-9.575 GHz
Peak Transmitter Power	10 kW
Transmitter Pulse Width	1.0 μs
Pulse Repetition Rate	1000 pps
Recovery Time	3.0 μs
Breakdown Power	100 mW
Spike Leakage	0.04 erg
Flat Leakage	30 mW
Insertion Loss	0.8 dB
Ignitor Current[2]	150 μAdc
Ignitor Voltage Drop	225 Vdc

OUTLINE DRAWING

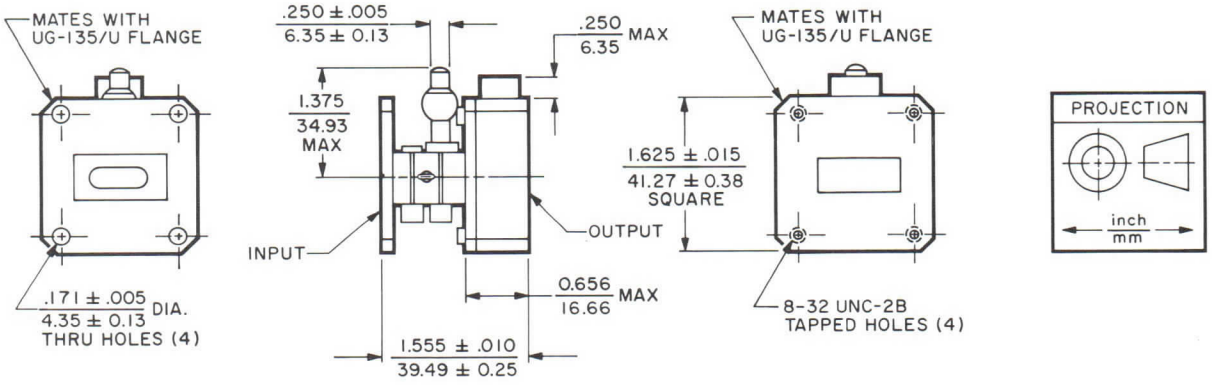

3037 6/73

Printed in U.S.A.

CHARACTERISTIC CURVES [1]

Typical performance values

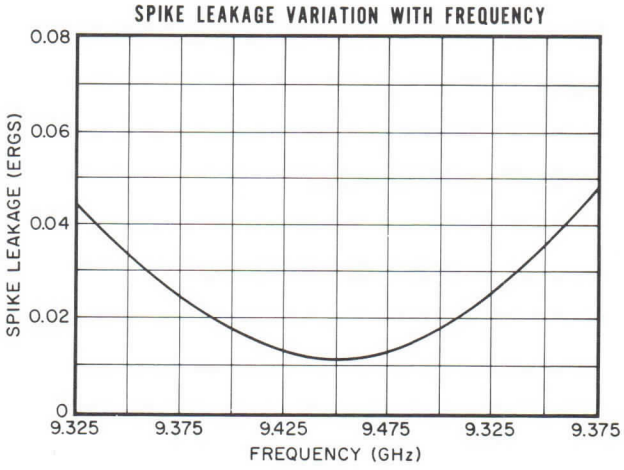

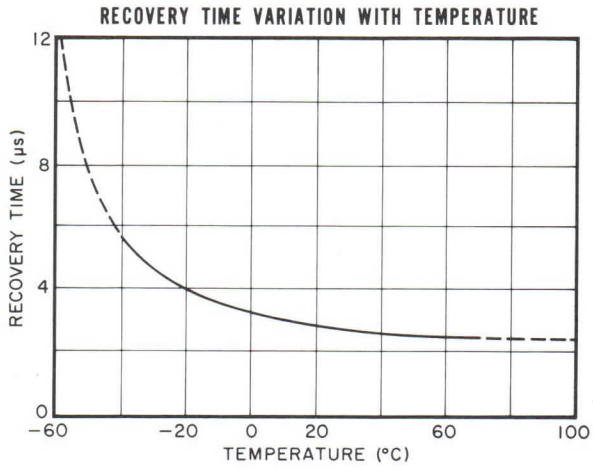

NOTES:

1. General characteristics, operating conditions, and characteristic curves are based on performance tests. These figures may be changed without notice as the result of additional performance data or product refinement. The Varian Eastern Tube Division should be consulted before using this information for final equipment design.

2. To calculate the value of ignitor series resistance required, use the following formula:

$$R_i = \frac{Ebb-Eid}{I_i}$$

where

R_i = Total ignitor-circuit series resistance in megohms
Ebb = Ignitor open-circuit supply voltage in volts
Eid = Ignitor voltage drop in volts
I_i = Ignitor current in microamperes

Example: $R_i = \frac{700-225}{150} = \frac{475}{150} = 3.167$ megohms

(To prevent oscillation, at least 0.5 megohm of the total series resistance should be close to the ignitor cap.)

VARIAN associates
BOMAC DIVISION

CRYSTAL PROTECTOR

BLT-026

23.7-24.3 Gc

DESCRIPTION

The BLT-026 is a fixed tuned, bandpass, TR tube designed to operate from 23.7 to 24.3 Gc at a maximum level of 35 kw. This tube is recommended for Airborne Navigation Radar applications as a crystal protector.

FEATURES

- Rugged
- High reliability
- Phase controlled
- Wide temperature range operation

CHARACTERISTICS

ELECTRICAL

Typical

Frequency	23.7 to 24.3 Gc
Recovery Time, maximum	4 μsec
Open Circuit Ignitor Voltage, minimum	−750 Vdc
Insertion Loss, maximum	0.8 db
VSWR, maximum	1.2
Flat Leakage Power, maximum	40 mw
Spike Leakage Energy, maximum	0.2 erg
Minimum Fire Power, maximum	0.5 watts

PHYSICAL

General

Mating Flange	UG 210/U
Tube Length	0.990 inches
Weight, approximate	2 oz

Environmental

Mounting Position	Any
Shock	15 G
Vibration, 0.060 inch excursion	5 to 500 cps

Read Operating Instructions before installing tube.

1077 7/63

Printed in U.S.A.

CHARACTERISTIC CURVES

Typical performance values

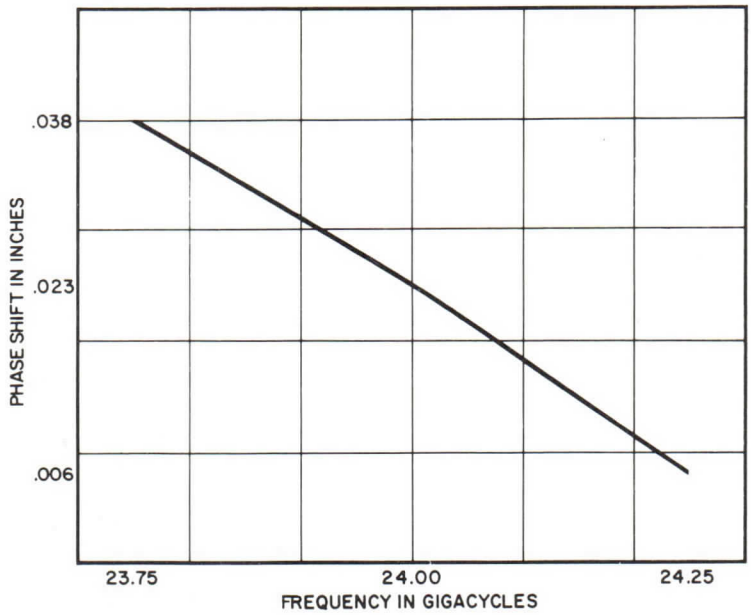

OUTLINE DRAWING

INPUT FLANGE

OUTPUT FLANGE

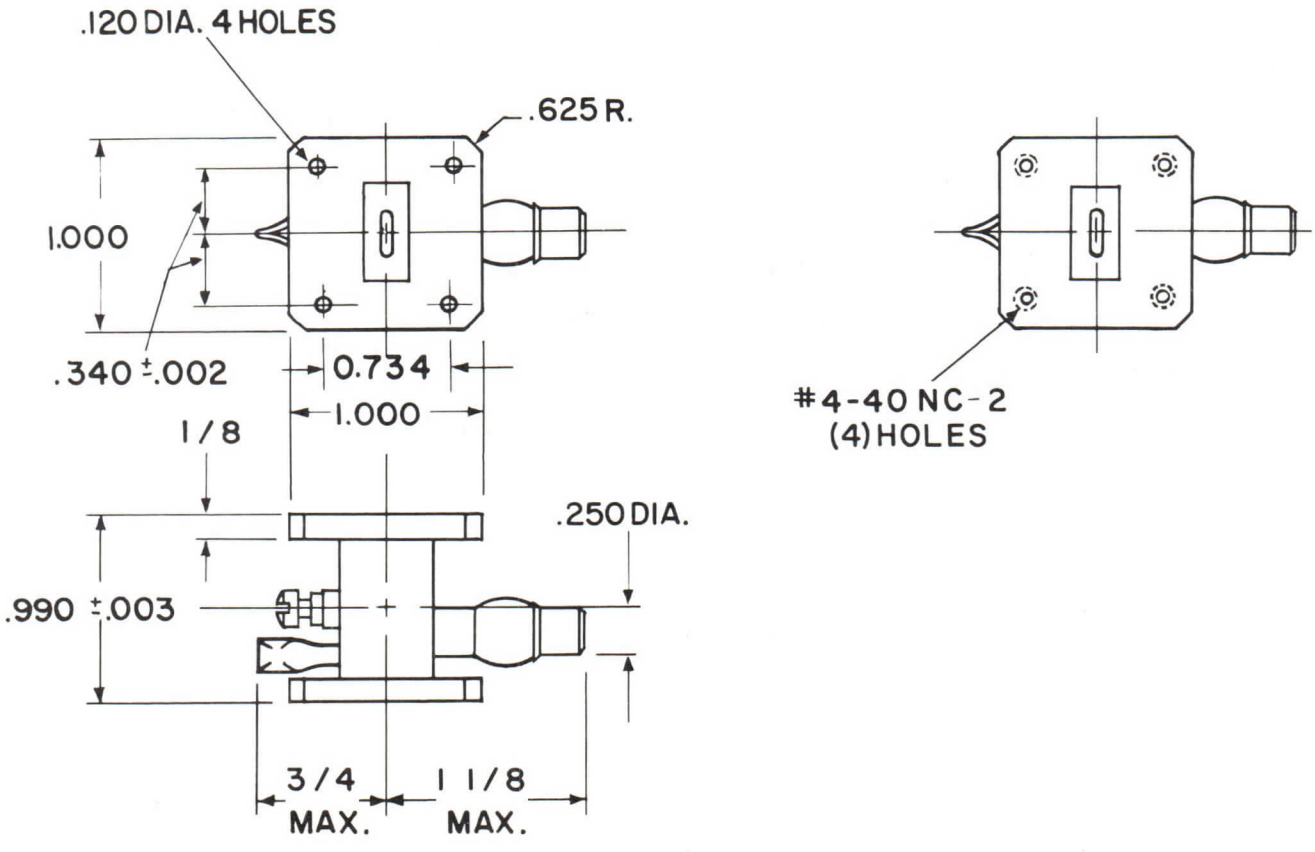

varian
eastern tube division

TECHNICAL DATA

BLT-088

SINGLE TR TUBE

9.335-9.415 GHz

DESCRIPTION

The BLT-088 is a single bandpass TR tube which operates in the frequency range of 9.335 to 9.415 gigahertz. This X-band receiver protector provides fast recovery time and controlled firing power. It was designed specifically for operation in AVQ-45 and AVQ-47 weather radars. Operating life expectancy is greater than 1000 hours.

OUTLINE DRAWING

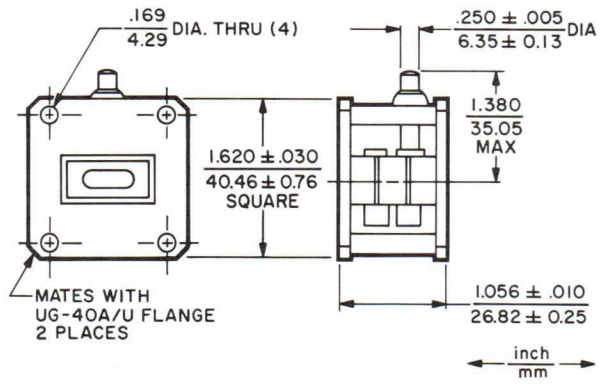

GENERAL CHARACTERISTICS [1]

ELECTRICAL

Frequency Range	9.335-9.415	GHz
Peak Power	2	kW
Duty Cycle	0.001	
Recovery Time	2.0	μs
Spike Leakage, max	0.25	erg
Flat Leakage, max	50	mW
Insertion Loss	0.7	dB
Ignitor Open Circuit Voltage, min	-700	Vdc
Ignitor Voltage Drop	175 to 375	Vdc
VSWR	1.4:1	

PHYSICAL

Dimensions	See Outline Drawing
Weight, approx	4 oz
Mating Flanges	UG-40A/U or equivalent

ENVIRONMENTAL

Altitude	70,000 ft
Vibration, 50 ± 2 Hz	15 G
Pressurization	30 $lbf/in^2 g$
Operating Temperature	-40 to +70 °C

TYPICAL OPERATING CONDITIONS [1]

Frequency Range	9.335-9.415	GHz
Peak Transmitter Power	2	kW
Transmitter Pulse Width	2.0	μs
Pulse Repetition Rate	400	pps
Recovery Time	1.3	μs
Breakdown Power	80	mW
Spike Leakage	0.15	erg
Flat Leakage	30	mW
Insertion Loss	0.6	dB
Ignitor Current [2]	150	μAdc
Ignitor Voltage Drop	225	Vdc

3031 7/73

Printed in U.S.A.

CHARACTERISTIC CURVES [1]

Typical performance values

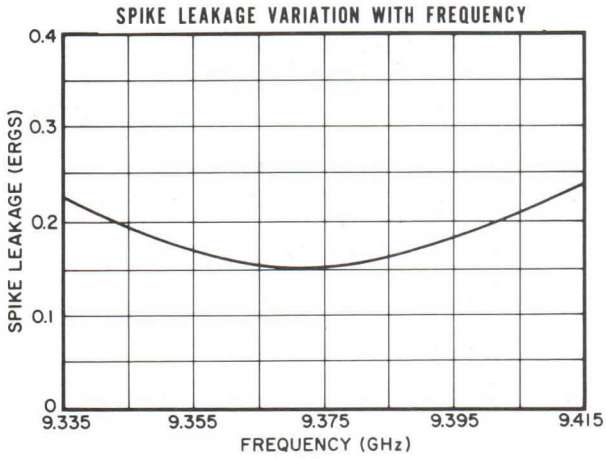

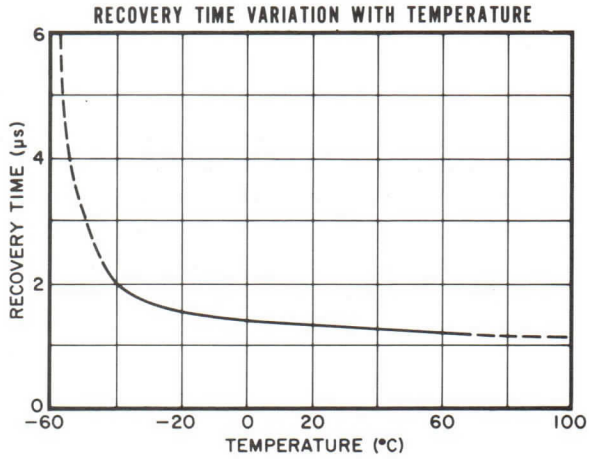

NOTES:

1. General characteristics, operating conditions, and characteristic curves are based on performance tests. These figures may be changed without notice as the result of additional performance data or product refinement. The Varian Eastern Tube Division should be consulted before using this information for final equipment design.

2. To calculate the value of ignitor series resistance required, use the following formula:

$$R_i = \frac{Ebb-Eid}{I_i}$$

where

R_i = Total ignitor-circuit series resistance in megohms
Ebb = Ignitor open-circuit supply voltage in volts
Eid = Ignitor voltage drop in volts
I_i = Ignitor current in microamperes

Example: $R_i = \frac{700-225}{150} = \frac{475}{150} = 3.167$ megohms

(To prevent oscillation, at least 0.5 megohm of the total series resistance should be close to the ignitor cap.)

varian
eastern tube division

TECHNICAL DATA

BLT-101

SINGLE TR TUBE

9.325-9.425 GHz

DESCRIPTION

The BLT-101 is a single bandpass TR tube which operates in the frequency range of 9.325 to 9.425 gigahertz. This X-band receiver protector is designed specifically for operation in RDR-1 weather radars. Operating life expectancy is greater than 500 hours.

GENERAL CHARACTERISTICS[1]

ELECTRICAL

Frequency Range	9.325-9.425 GHz
Peak Power	40 kW
Duty Cycle	0.001
Recovery Time, max	10 μs
Spike Leakage, max	0.25 erg
Flat Leakage, max	60 mW
Insertion Loss	0.5 dB
Ignitor Open Circuit Voltage, min	-700 Vdc
Ignitor Voltage Drop	175 to 375 Vdc
VSWR	1.4:1

PHYSICAL

Dimensions	See Outline Drawing
Weight, approx	2 oz
Mating Flanges	See Outline Drawing

ENVIRONMENTAL

Altitude	70,000 ft
Vibration, 50 ± 2 Hz	15 G
Pressurization	30 lbf/in²g
Operating Temperature	0 to +70 °C

TYPICAL OPERATING CONDITIONS[1]

Frequency Range	9.325-9.425 GHz
Peak Transmitter Power	40 kW
Transmitter Pulse Width	1.0 μs
Pulse Repetition Rate	1000 pps
Recovery Time	4 μs
Spike Leakage	0.2 erg
Flat Leakage	40 mW
Insertion Loss	0.4 dB
Ignitor Current[2]	150 μAdc
Ignitor Voltage Drop	225 Vdc

NOTES:

1. General characteristics and operating conditions are based on performance tests. These figures may be changed without notice as the result of additional performance data or product refinement. The Varian Eastern Tube Division should be consulted before using this information for final equipment design.
2. To calculate the value of ignitor series resistance required, use the following formula:

$$R_i = \frac{Ebb - Eid}{I_i}$$

where

R_i = Total ignitor-circuit series resistance in megohms
Ebb = Ignitor open-circuit supply voltage in volts
Eid = Ignitor voltage drop in volts
I_i = Ignitor current in microamperes

Example: $R_i = \frac{700-225}{150} = \frac{475}{150} = 3.167$ megohms

(To prevent oscillation, at least 0.5 megohm of the total series resistance should be close to the ignitor cap.)

OUTLINE DRAWING

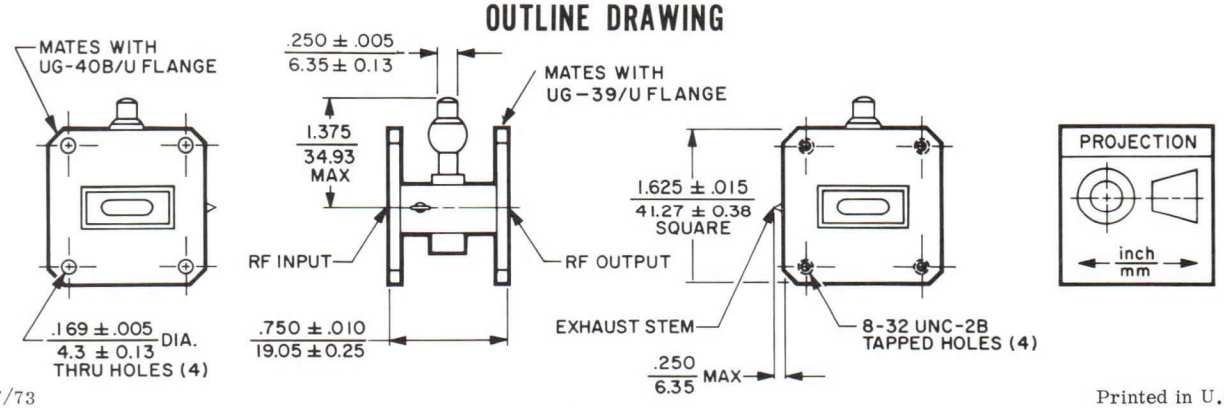

3032 7/73

Printed in U.S.A.

varian
eastern tube division

TECHNICAL DATA

BLT-111

DURATEMP® SINGLE TR TUBE

16-17 GHz

DESCRIPTION

The BLT-111 is a single bandpass DURATEMP TR tube which operates in the frequency range of 16 to 17 gigahertz. This Ku-band receiver protector provides low leakage power and exceptionally fast recovery time over a wide range of incident power. The TR employs special high-temperature processing techniques which greatly increase shelf and operating life. It maintains stable operation over a wide temperature range. Operating life expectancy is greater than 2000 hours.

OUTLINE DRAWING

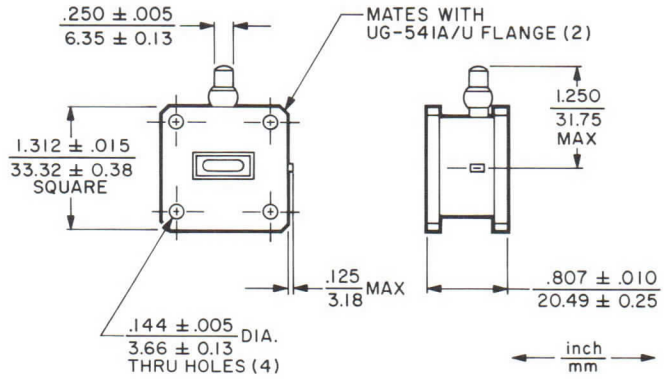

GENERAL CHARACTERISTICS[1]

ELECTRICAL

Frequency Range	16-17 GHz
Peak Power	10 kW
Duty Cycle	0.001
Recovery Time	1 μs
Spike Leakage, max	0.1 erg
Flat Leakage, max	40 mW
Insertion Loss	0.5 dB
Ignitor Open Circuit Voltage, min	-750 Vdc
Ignitor Voltage Drop	175-375 Vdc
VSWR	1.3:1

PHYSICAL

Dimensions	See Outline Drawing
Weight, approx	3.25 oz
Mating Flanges	UG-541A/U or equivalent

ENVIRONMENTAL

Altitude	70,000 ft
Vibration, 50 ± 2 Hz	15 G
Pressurization	30 lbf/in²g
Operating Temperature	-55 to +125 °C

TYPICAL OPERATING CONDITIONS[1]

Frequency Range	16-17 GHz
Peak Transmitter Power	10 kW
Transmitter Pulse Width	0.5 μs
Pulse Repetition Rate	2000 pps
Recovery Time	0.5 μs
Breakdown Power	150 mW
Spike Leakage	0.07 erg
Flat Leakage	30 mW
Insertion Loss	0.3 dB
Ignitor Current[2]	150 μAdc
Ignitor Voltage Drop	225 Vdc

3033 6/73

Printed in U.S.A.

CHARACTERISTIC CURVES [1]

Typical performance values

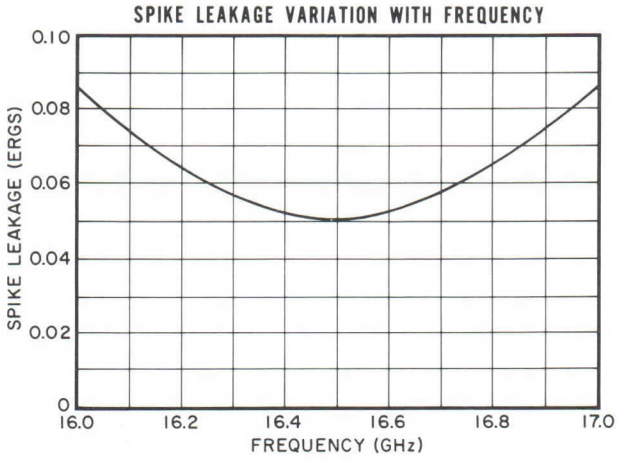

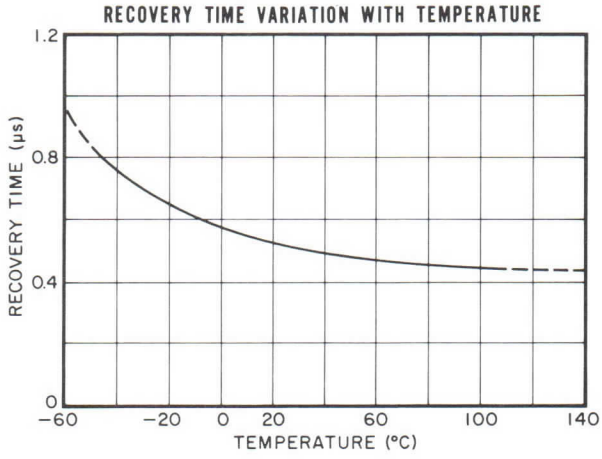

NOTES:

1. General characteristics, operating conditions, and characteristic curves are based on performance tests. These figures may be changed without notice as the result of additional performance data or product refinement. The Varian Eastern Tube Division should be consulted before using this information for final equipment design.

2. To calculate the value of ignitor series resistance required, use the following formula:

$$R_i = \frac{Ebb-Eid}{I_i}$$

where

R_i = Total ignitor-circuit series resistance in megohms
Ebb = Ignitor open-circuit supply voltage in volts
Eid = Ignitor voltage drop in volts
I_i = Ignitor current in microamperes

Example: $R_i = \frac{750-225}{150} = \frac{525}{150} = 3.5$ megohms

(To prevent oscillation, at least 0.5 megohm of the total series resistance should be close to the ignitor cap.)

varian

TECHNICAL DATA

BLT-119

R-F SWITCH

2.9-3.2 GHz

DESCRIPTION

The BLT-119 is a single-pole, double-throw, bandpass r-f switch for use as a receiver protector. This S-band device was designed specifically to replace the BS-110 in Selenia 1060, 1401A, 1450, 1650 and 1660 marine radars. Operating life expectancy is greater than 500 hours.

GENERAL CHARACTERISTICS[1]

ELECTRICAL

Frequency Range	2.9-3.2 GHz
Peak Power, max	60 kW
Duty Cycle	0.005
Recovery Time, 3 dB	1.5 μs
Spike Leakage, max	0.4 erg
Flat Leakage, max	40 mW
Insertion Loss, max	0.7 dB
Ignitor Open Circuit Voltage, min	-650 Vdc
Ignitor Voltage Drop	225-375 Vdc
VSWR	1.4:1

PHYSICAL

Dimensions	See Outline Drawing
Weight, approx	2.25 lb/567 g
Mating Flanges	Special

ENVIRONMENTAL

Altitude	10,000 ft/3 km
Vibration, 50 ± 2 Hz	15 G
Pressurization	30 lbf/in^2 g(2.1 kgf/cm^2 g)
Operating Temperature	0 to +70 °C

CHARACTERISTIC CURVE[1]

Typical performance values

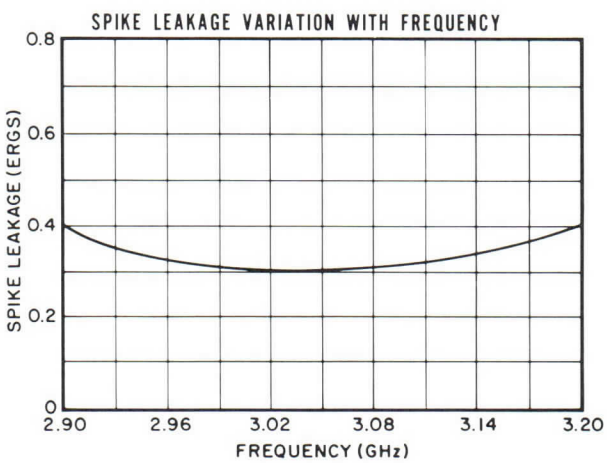

TYPICAL OPERATING CONDITIONS[1]

Frequency Range	2.9 to 3.2 GHz
Peak Transmitter Power	60 kW
Transmitter Pulse Width	0.5 μs
Pulse Repetition Rate	1000 pps
Recovery Time, 3 dB	1.0 μs
Spike Leakage	0.3 erg
Flat Leakage	35 mW
Insertion Loss	0.6 dB
Ignitor Current[2]	150 μAdc
Ignitor Voltage Drop	235 Vdc

NOTES:

1. General characteristics, operating conditions, and characteristic curves are based on performance tests. These figures may change without notice as the result of additional performance data or product refinement. Consult Varian before using this information for final equipment design.

2. To calculate the value of ignitor series resistance required, use the following formula:

$$R_i = \frac{Eff-Eid}{I_i}$$

where

R_i = Total ignitor-circuit series resistance in megohms
Ebb = Ignitor open-circuit supply voltage in volts
Eid = Ignitor voltage drop in volts
I_i = Ignitor current in microamperes

Example: $R_i = \frac{700-225}{150} = \frac{475}{150} = 3.167$ megohms

(To prevent oscillation, at least 0.5 megohm of the total series resistance should be close to the ignitor cap.)

3592 8/76

Printed in U.S.A.

OUTLINE DRAWING

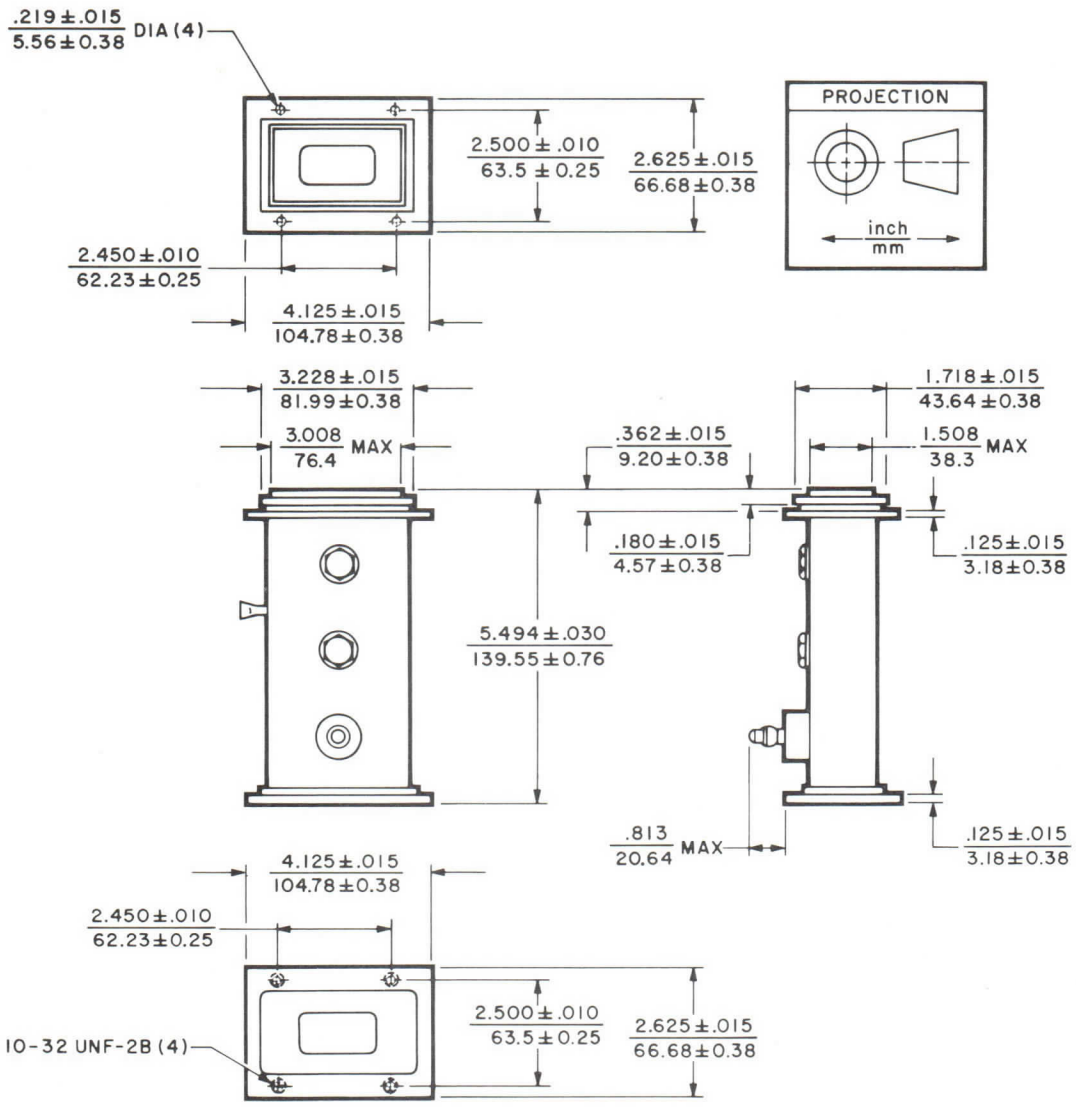

varian

CRYSTAL PROTECTOR

DATA SHEET

BLS-517

69.5-71.5 GHz

DESCRIPTION

The BLS-517 is a fixed-frequency crystal protector for pulsed systems operating up to 3 kilowatts between 69.5 and 71.5 gigahertz. It is ideal for use in systems where consistent performance and high reliability under severe environmental conditions are important. High temperature processing techniques provide long life and stable operation over a wide temperature range. Warranted life is 500 hours.

GENERAL CHARACTERISTICS[1]

ELECTRICAL

Frequency	69.5-71.5 GHz
Recovery Time, at 25 °C, max	0.5 μs
Insertion Loss, max	1.0 dB
Firing Power, min	300 mW
Flat Leakage Power, max	30 mW
Spike Leakage Energy, max	0.03 erg
Noise Figure[2]	1.1 dB
Open-circuit Ignitor Voltage, min	-750 Vdc
Ignitor Current, typ	200 μAdc
Input VSWR	1.3:1

PHYSICAL

Dimensions	See Outline Drawing
Weight, approx	2 oz
Mounting Position	Any
RF Connections	Mate with UG-385/U Flange

ENVIRONMENTAL

Operating Temperature	-40 to +85 °C
Shock, 11 ms	50 G
Vibration	
Amplitude, 50±2 Hz	0.08 in
Sweep Frequency	10-500-10 Hz

NOTES:

1. Characteristics are based on test performance and may change without notice as a result of additional data or product improvement.
2. Noise figure includes total contribution from insertion loss, ignitor interaction, and ignitor noise.

OUTLINE DRAWING

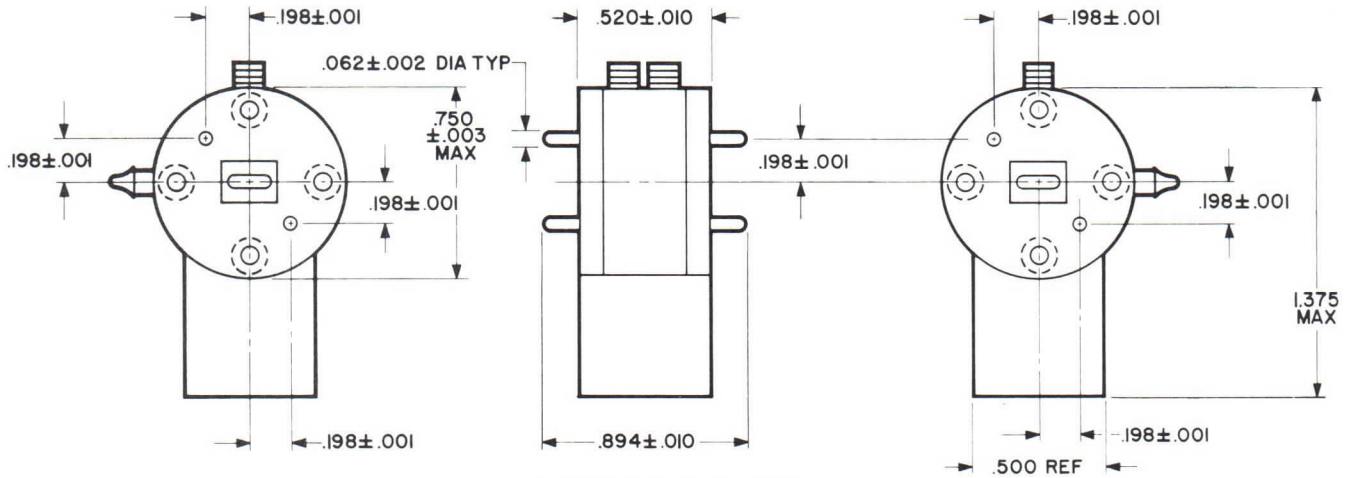

DIMENSIONS ARE IN INCHES

B1724 6/67

Printed in U.S.A.

varian
eastern tube division

TECHNICAL DATA

BTR-545A

SINGLE TR TUBE

9.325-9.425 GHz

DESCRIPTION

The BTR-545A is a single bandpass TR tube which operates in the frequency range of 9.325 to 9.425 gigahertz. This X-band receiver protector provides fast recovery time, low insertion loss, and controlled firing power. This tube was designed specifically for operation in WP-103 and WP-103G weather radars. Operating life expectancy is greater than 500 hours.

GENERAL CHARACTERISTICS[1]

ELECTRICAL

Frequency Range	9.325-9.425 GHz
Peak Power	5 kW
Duty Cycle	0.001
Recovery Time	3 μs
Spike Leakage, max	0.25 erg
Flat Leakage, max	40 mW
Insertion Loss	0.5 dB
Open Circuit Ignitor Voltage, min	-650 Vdc
Ignitor Voltage Drop	175 to 375 Vdc
VSWR	1.4:1

PHYSICAL

Dimensions	See Outline Drawing
Weight, approx	1.5 oz
Mating Flanges	Special

ENVIRONMENTAL

Altitude	70,000 ft
Vibration, 50 ± 2 Hz	15 G
Pressurization	30 lbf/in²g
Operating Temperature	-40 to +90 °C

TYPICAL OPERATING CONDITIONS[1]

Frequency Range	9.325-9.425 GHz
Peak Transmitter Power	5 kW
Transmitter Pulse Width	1 μs
Pulse Repetition Rate	1000 pps
Recovery Time	1.5 μs
Breakdown Power	100 mW
Spike Leakage	0.15 erg
Flat Leakage	20 mW
Insertion Loss	0.35 dB
Ignitor Current[2]	150 μAdc
Ignitor Voltage Drop	225 Vdc

OUTLINE DRAWING

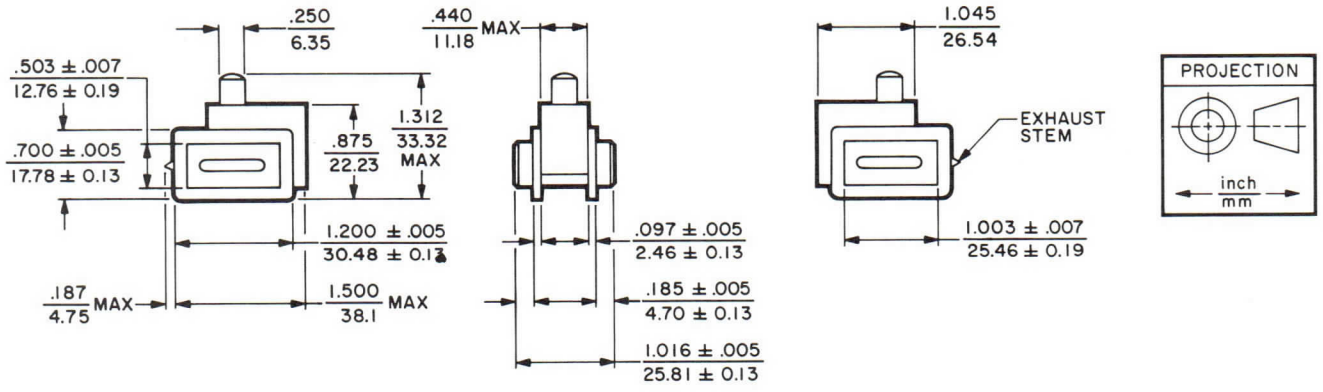

3034 7/73

Printed in U.S.A.

CHARACTERISTIC CURVES [1]

Typical performance values

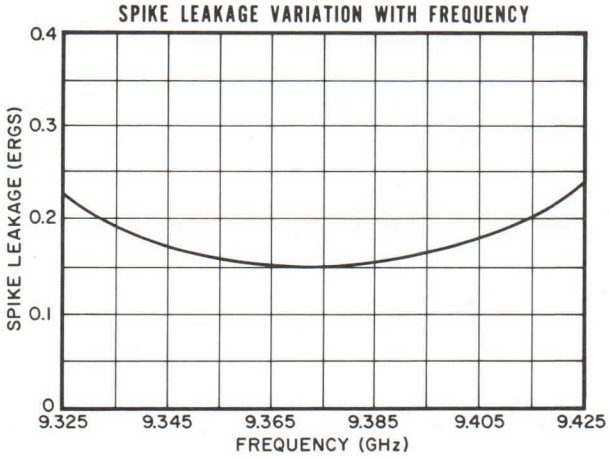

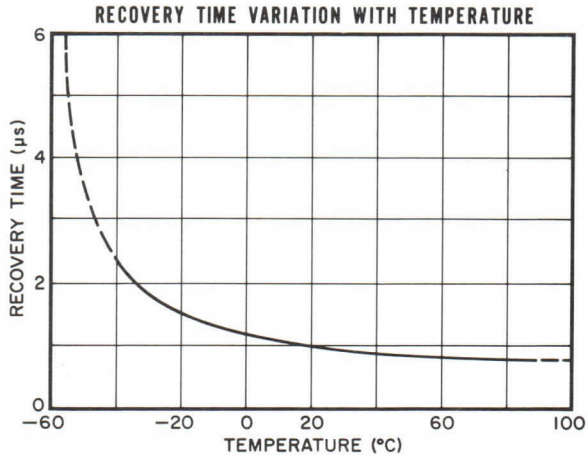

NOTES:

1. General characteristics, operating conditions, and characteristic curves are based on performance tests. These figures may be changed without notice as the result of additional performance data or product refinement. The Varian Eastern Tube Division should be consulted before using this information for final equipment design.

2. To calculate the value of ignitor series resistance required, use the following formula:

$$R_i = \frac{Ebb-Eid}{I_i}$$

where

R_i = Total ignitor-circuit series resistance in megohms
Ebb = Ignitor open-circuit supply voltage in volts
Eid = Ignitor voltage drop in volts
I_i = Ignitor current in microamperes

Example: $R_i = \frac{650-225}{150} = 2.833$ megohms

(To prevent oscillation, at least 0.5 megohm of the total series resistance should be close to the ignitor cap.)

varian
eastern tube division

TECHNICAL DATA

BTR-545B

SINGLE TR TUBE

9.0-9.4 GHz

DESCRIPTION

The BTR-545B is a single bandpass TR tube which operates in the frequency range of 9.0 to 9.4 gigahertz. This X-band receiver protector provides fast recovery time, low insertion loss, and controlled firing power. This broadband version of the BTR-545A was designed specifically for operation in WP-103 and WP-103G weather radars. For best system operation, the 6795A tube type should be replaced with the BTR-545B. Operating life expectancy is greater than 500 hours.

GENERAL CHARACTERISTICS[1]

ELECTRICAL

Frequency Range	9.0-9.4 GHz
Peak Power	5 kW
Duty Cycle	0.001
Recovery Time	3 μs
Spike Leakage, max	0.25 erg
Flat Leakage, max	40 mW
Insertion Loss	0.5 dB
Open Circuit Ignitor Voltage, min	-650 Vdc
Ignitor Voltage Drop	175 to 375 Vdc
VSWR	1.4:1

PHYSICAL

Dimensions	See Outline Drawing
Weight, approx	1.5 oz
Mating Flanges	Special

ENVIRONMENTAL

Altitude	70,000 ft
Vibration, 50 ± 2 Hz	15 G
Pressurization	30 lbf/in²g
Operating Temperature	-40 to +90 °C

TYPICAL OPERATING CONDITIONS[1]

Frequency Range	9.0-9.4 GHz
Peak Transmitter Power	5 kW
Transmitter Pulse Width	1 μs
Pulse Repetition Rate	1000 pps
Recovery Time	1.5 μs
Breakdown Power	100 mW
Spike Leakage	0.15 erg
Flat Leakage	20 mW
Insertion Loss	0.35 dB
Ignitor Current[2]	150 μAdc
Ignitor Voltage Drop	225 Vdc

OUTLINE DRAWING

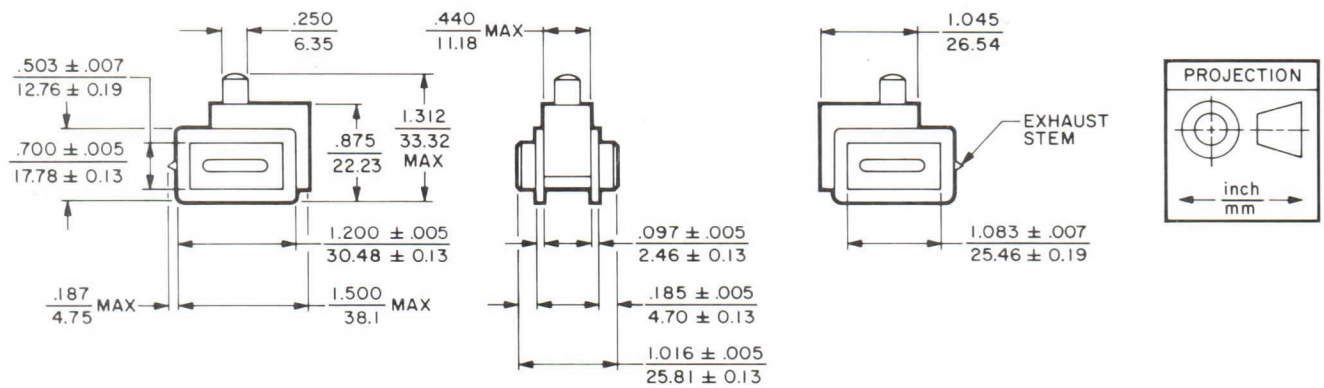

3080 9/73

Printed in U.S.A.

CHARACTERISTIC CURVES[1]
Typical performance values

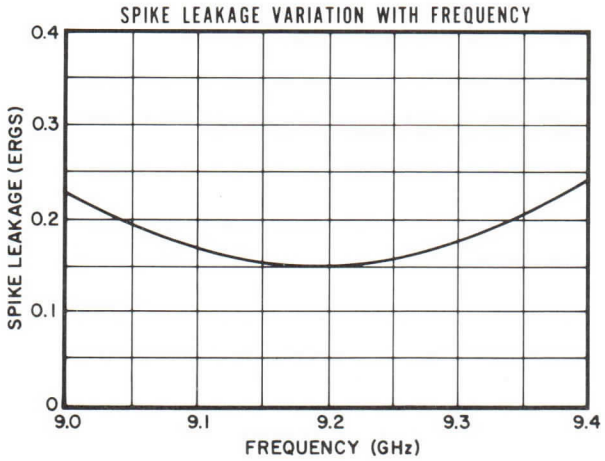

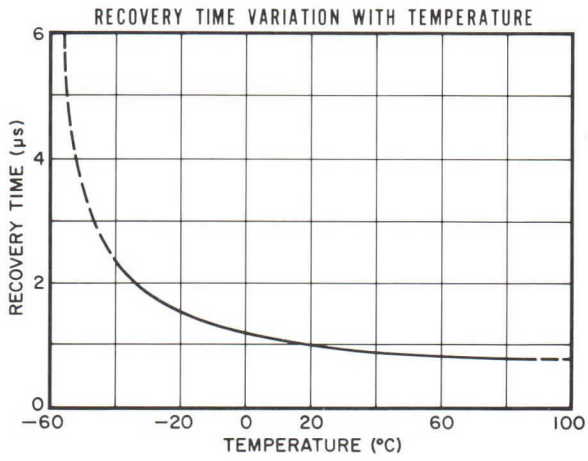

NOTES:

1. General characteristics, operating conditions, and characteristic curves are based on performance tests. These figures may be changed without notice as the result of additional performance data or product refinement. The Varian Eastern Tube Division should be consulted before using this information for final equipment design.

2. To calculate the value of ignitor series resistance required, use the following formula:

$$R_i = \frac{Ebb-Eid}{I_i}$$

where

R_i = Total ignitor-circuit series resistance in megohms
Ebb = Ignitor open-circuit supply voltage in volts
Eid = Ignitor voltage drop in volts
I_i = Ignitor current in microamperes

Example: $R_i = \frac{650-225}{150} = \frac{425}{150} = 2.833$ megohms

(To prevent oscillation, at least 0.5 megohm of the total series resistance should be close to the ignitor cap.)

varian
eastern tube division

TECHNICAL DATA

BTR-547

SINGLE TR TUBE

5.35-5.45 GHz

DESCRIPTION

The BTR-547 is a single bandpass TR tube which operates in the frequency range of 5.35 to 5.45 gigahertz. This C-band duplexing tube offers very low insertion loss and ignitor noise ratio. This tube was designed specifically for use in the AVQ-10 weather radar having a TDA receiver front end. Operating life expectancy is greater than 500 hours.

GENERAL CHARACTERISTICS[1]

ELECTRICAL

Frequency Range	5.35-5.45	GHz
Peak Power, max	85	kW
Duty Cycle, max	0.0015	
Recovery Time, max	7.0	μs
Spike Leakage, max	0.15	erg
Flat Leakage, max	60	mW
Insertion Loss, max	0.3	dB
Ignitor Open Circuit Voltage, min	-700	Vdc
Ignitor Voltage Drop	175-375	Vdc
Ignitor Noise Ratio, max	1.1:1	
VSWR, max	1.25:1	

PHYSICAL

Dimensions	See Outline Drawing
Weight, approx	6 oz

ENVIRONMENTAL

Altitude	70,000	ft
Vibration, 50 ± 2 Hz	15	G
Pressurization	30	$lbf/in^2 g$
Operating Temperature	-40 to +70	°C

CHARACTERISTIC CURVES

Typical performance values

SPIKE LEAKAGE VARIATION WITH FREQUENCY

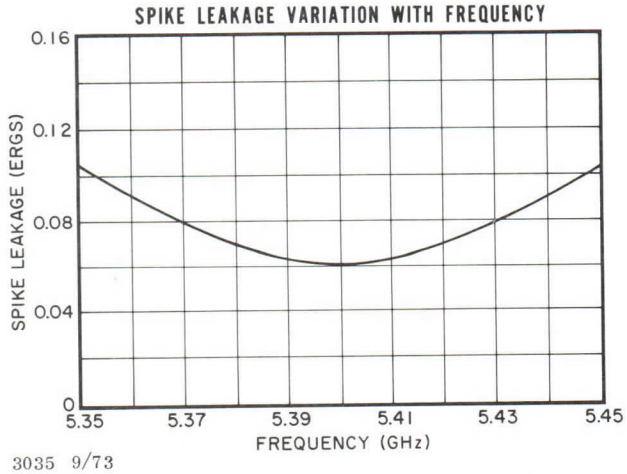

OUTLINE DRAWING

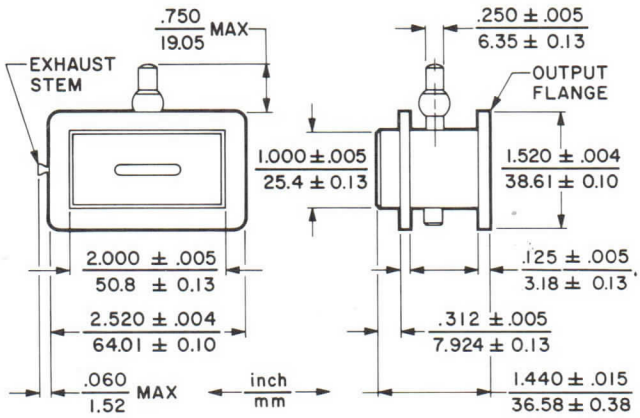

TYPICAL OPERATING CONDITIONS[1]

Frequency Range	5.35-5.45	GHz
Peak Transmitter Power	85	kW
Transmitter Pulse Width	1	μs
Pulse Repetition Rate	1000	pps
Recovery Time	3	μs
Spike Leakage	0.08	erg
Flat Leakage	45	mW
Insertion Loss	0.25	dB
Ignitor Noise Ratio	1.05:1	
Ignitor Current	150	μAdc
Ignitor Voltage Drop	225	Vdc

NOTES:

1. General characteristics and operating conditions are based on performance tests. These figures may be changed without notice as the result of additional performance data or product refinement. The Varian Eastern Tube Division should be consulted before using this information for final equipment design.
2. To calculate the value of ignitor series resistance required, use the following formula:

$$R_i = \frac{Ebb - Eid}{I_i}$$

where

R_i = Total ignitor-circuit series resistance in megohms
Ebb = Ignitor open-circuit supply voltage in volts
Eid = Ignitor voltage drop in volts
I_i = Ignitor current in microamperes

Example: $R_i = \frac{700-225}{150} = \frac{475}{150} = 3.167$ megohms

(To prevent oscillation, at least 0.5 megohm of the total series resistance should be close to the ignitor cap.)

3035 9/73

Printed in U.S.A.

CHARACTERISTIC CURVES
Typical performance values

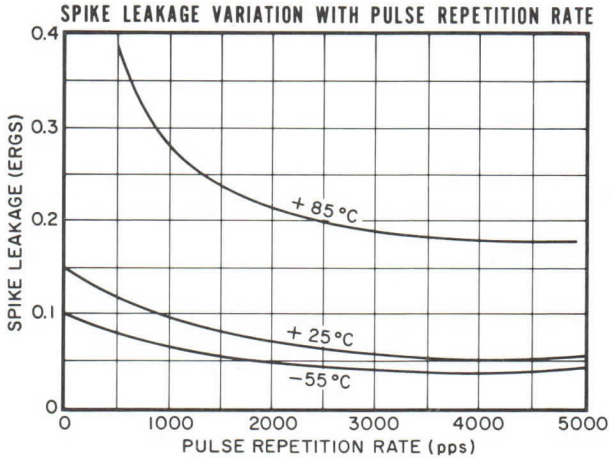

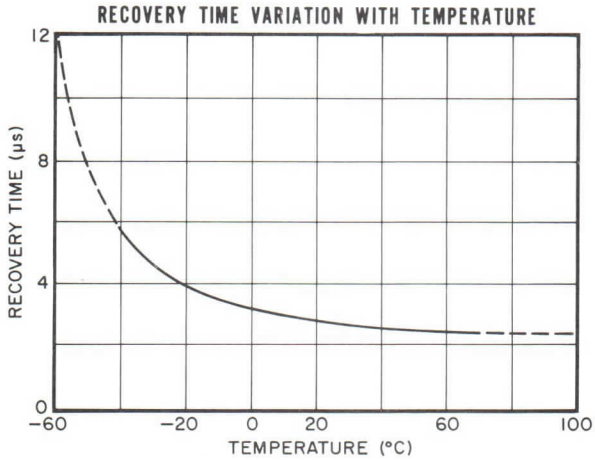

OUTLINE DRAWINGS

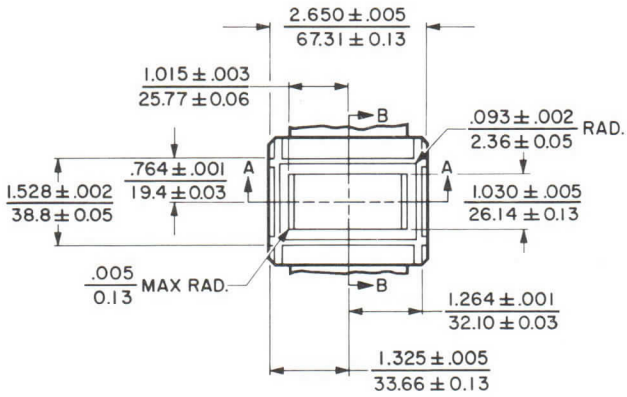

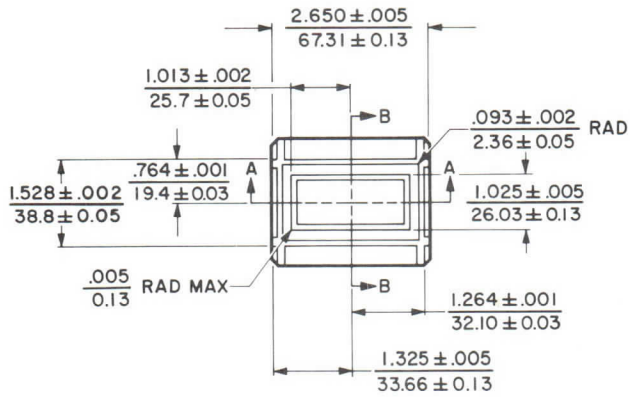

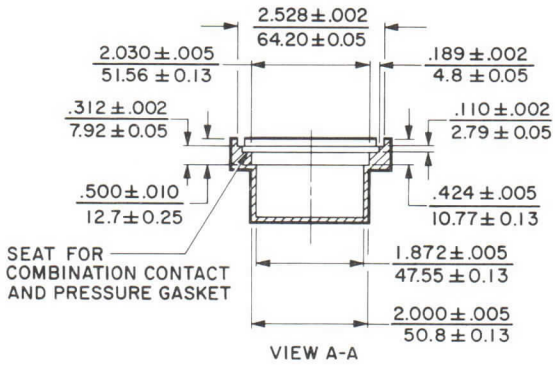

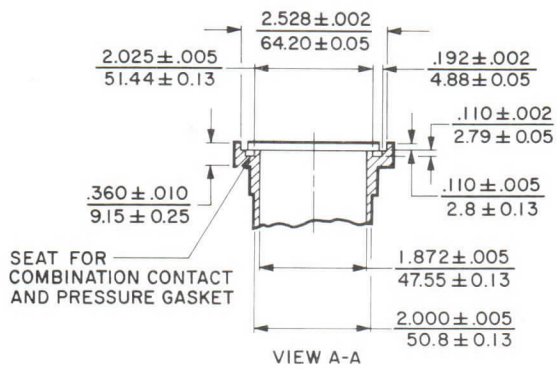

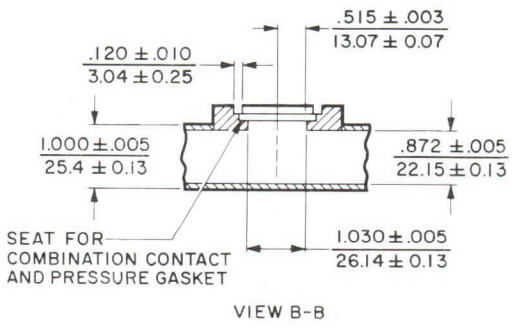

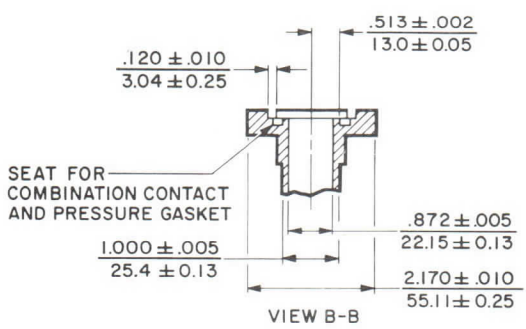

INPUT MOUNTING SEAT

inch / mm

OUTPUT MOUNTING SEAT

varian

CRYSTAL PROTECTOR AND SHUTTER

DATA SHEET

BTR-553

16.0-17.0 GHz

DESCRIPTION

The BTR-553 is a crystal protector with external 28-volt shutter which operates in the frequency band of 16.0 to 17.0 gigahertz. This Ku-band device provides consistent performance under severe environmental conditions. The shutter prevents damage to the receiver while the system is not in operation.

FEATURES

- Rugged construction
- Compact and lightweight
- Shutter life of 100,000 cycles
- Warranted tube life of 1000 hours

GENERAL CHARACTERISTICS

ELECTRICAL

Frequency Range	16.0 to 17.0 GHz
Peak Power, nominal	10 kW
Duty Cycle, max	0.001
Recovery Time, typ	0.5 μs
Spike Leakage,* typ	0.2 erg
Flat Leakage, typ	30 mW
VSWR, max	1.3:1
Insertion Loss, typ	0.5 dB
Breakdown Power, typ	150 mW
Shutter Attenuation, min	25 dB
Pulse Width	0.2 to 2.0 μs

MECHANICAL

Dimensions	See Outline Drawing
Mating Flanges	UG-541/U
Weight, approx	4 oz
Operating Temperature	-55 to +125 °C

ENVIRONMENTAL

Altitude	60,000 ft
Vibration	
Frequency, 5-55 Hz, DA	0.08 in
Frequency, 55-500 Hz	10 G

OPERATING CONDITIONS

Frequency Range	16.0 to 17.0 GHz
Peak Transmitter Power, maximum	10 kW
Transmitter Pulse Width	1.0 μs
Pulse Repetition Rate	1000 pps
Open Circuit Ignitor Voltage, minimum	-700 Vdc
Shutter Voltage, typical	28 Vdc
Pull In Voltage, minimum	21 Vdc
Holding Voltage, minimum	10 Vdc
Ignitor Current	100 to 200 μAdc
Insertion Loss, shutter closed, minimum	25 dB

* Tested with sampling scope.

1810 11/67

Printed in U.S.A.

OUTLINE DRAWING

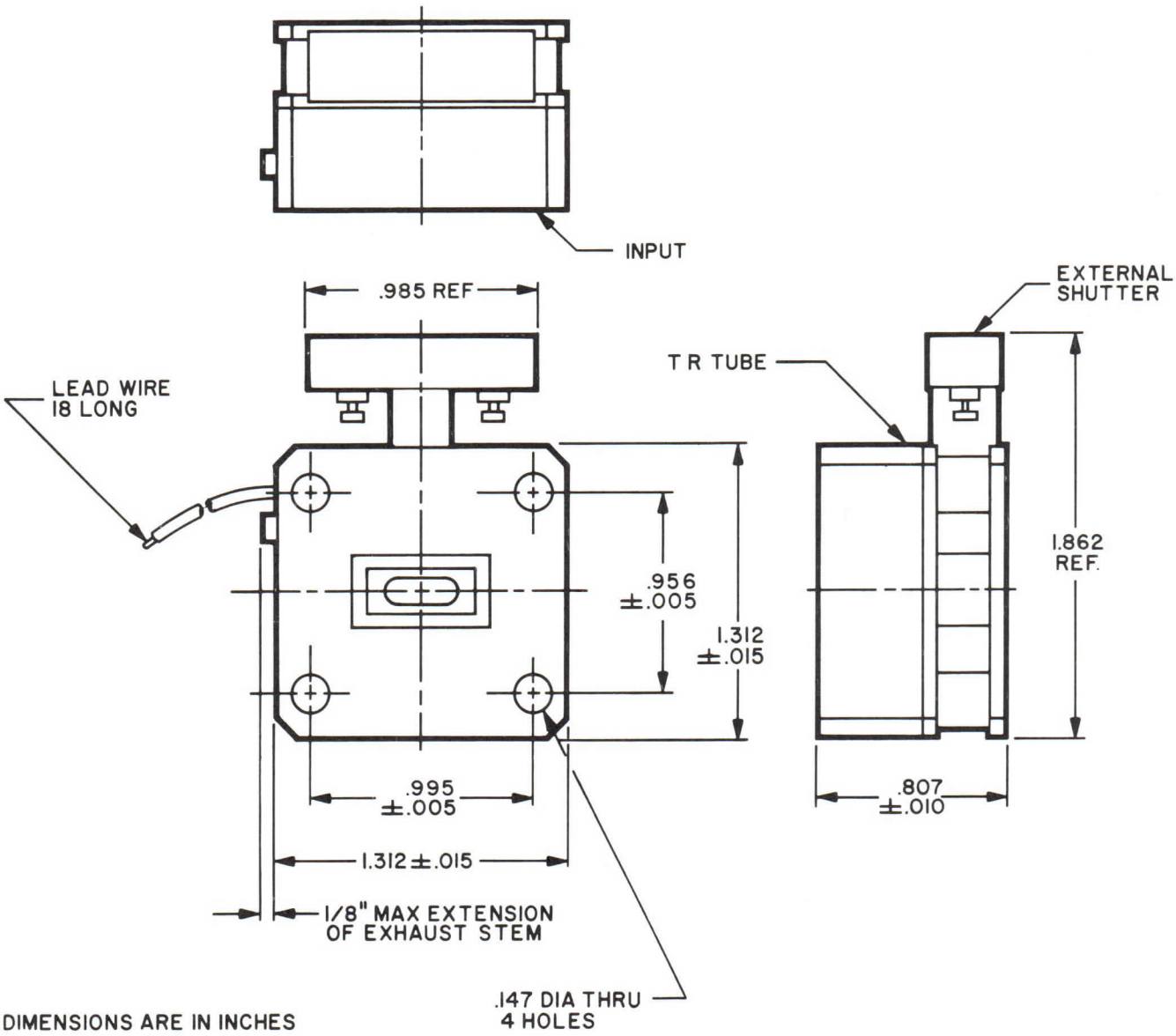

DIMENSIONS ARE IN INCHES

varian beverly

TECHNICAL DATA

BTR-554

CRYSTAL PROTECTOR AND SHUTTER

16-17 GHz

DESCRIPTION

The BTR-554 is a crystal protector with external 28-volt shutter which operates in the frequency band of 16.0 to 17.0 gigahertz. This Ku-band device provides consistent performance under severe environmental conditions. The shutter prevents damage to the receiver while the system is not in operation.

FEATURES

- Rugged construction
- Compact and lightweight
- Shutter life of 100,000 cycles
- Warranted tube life of 2000 hours

GENERAL CHARACTERISTICS

ELECTRICAL

Frequency Range	16.0 to 17.0 GHz
Peak Power, nominal	10 kW
Duty Cycle, max	0.001
Recovery Time, typ	0.5 μs
Spike Leakage,* typ	0.1 erg
Flat Leakage, typ	30 mW
VSWR, max	1.3:1
Insertion Loss, typ	0.4 dB
Breakdown Power, typ	100 mW
Shutter Attenuation, min	25 dB
Pulse Width	0.2 to 2.0 μs

MECHANICAL

Dimensions	See Outline Drawing
Mating Flanges	UG-541/U
Weight, approx	5 oz
Operating Temperature	-55 to +125 °C

ENVIRONMENTAL

Altitude	70,000 ft
Vibration	
Frequency, 5-55 Hz, DA	0.08 in
Frequency, 55-500 Hz	10 G

OPERATING CONDITIONS

Frequency Range	16.0 to 17.0 GHz
Peak Transmitter Power, maximum	10 kW
Transmitter Pulse Width	1.0 μs
Pulse Repetition Rate	1000 pps
Open Circuit Ignitor Voltage, minimum	-700 Vdc
Shutter Voltage, typical	28 Vdc
Pull In Voltage, minimum	21 Vdc
Holding Voltage, minimum	10 Vdc
Ignitor Current	100 to 200 μAdc
Insertion Loss, shutter closed, minimum	25 dB

*Tested with sampling scope

1809 11/67

Printed in U.S.A.

OUTLINE DRAWING

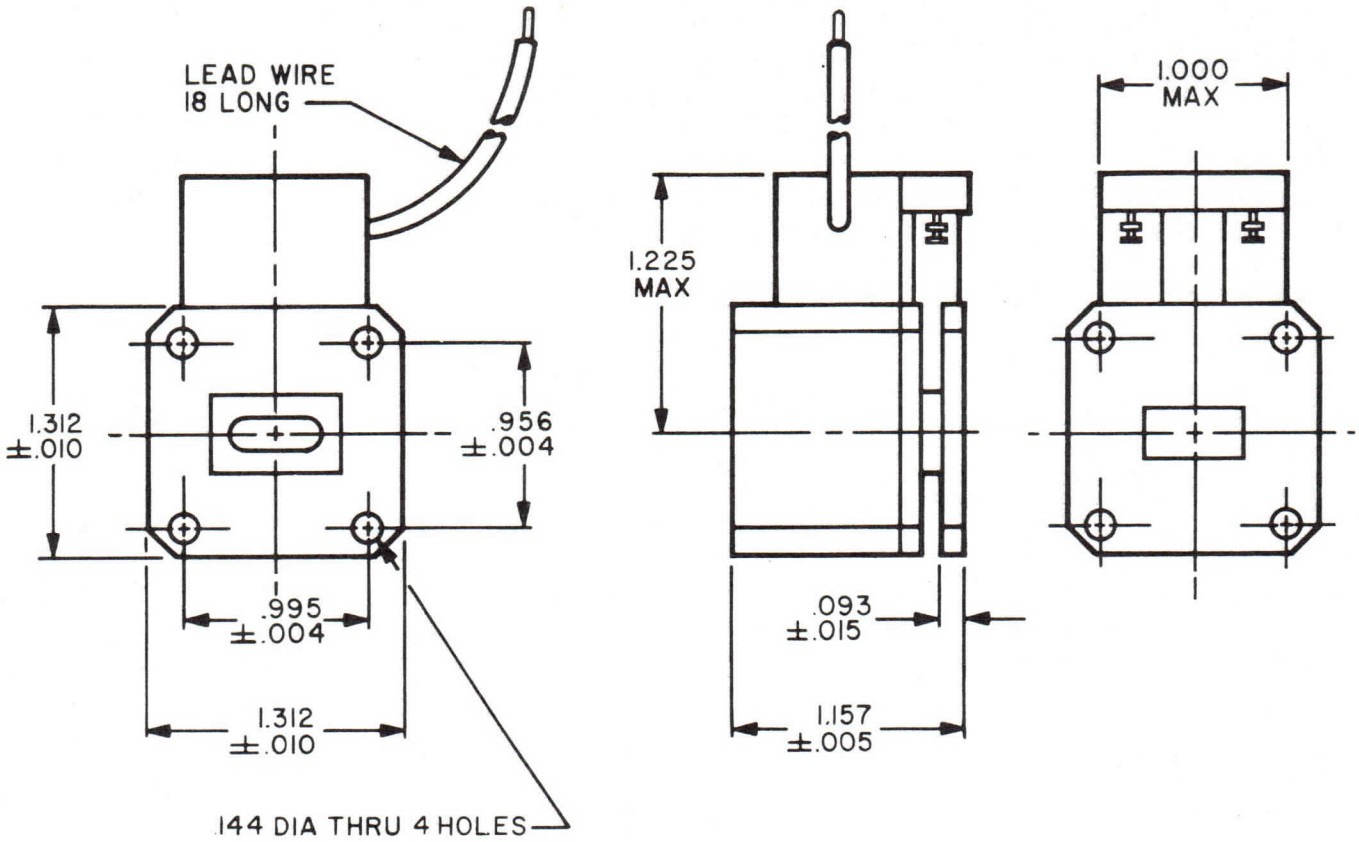

DIMENSIONS ARE IN INCHES

varian

TECHNICAL DATA

BTR-596

SINGLE TR TUBE

9.31-9.51 GHz

DESCRIPTION

The BTR-596 is a single bandpass TR tube which operates in the frequency range of 9.31 to 9.51 gigahertz. This X-band receiver protector was designed specifically for operation in Decca D101 and Decca Super 101 marine radars. Operating life expectance is greater than 500 hours.

GENERAL CHARACTERISTICS [1]

ELECTRICAL

Frequency Range	9.31-9.51	GHz
Peak Power, max	100	kW
Duty Cycle	0.001	
Recovery Time, 3 dB	1.5	μs
Spike Leakage, max	0.2	erg
Flat Leakage, max	75	mW
Insertion Loss, max	0.8	dB
Ignitor Open Circuit Voltage, min	-700	Vdc
Ignitor Voltage Drop	175-375	Vdc
VSWR	1.3:1	

PHYSICAL

Dimensions	See Outline Drawing
Weight, approx	4 oz/113.6 g
Mating Flanges	UG-40A/U or equivalent
Position of Short[2]	0.201-0.260 in/5.11-6.60 mm

ENVIRONMENTAL

Altitude	70,000 ft/21 km
Vibration, 50 ± 2 Hz	15 G
Pressurization	30 lbf/in^{2}g (2.1 kgf/cm^{2}g)
Operating Temperature	0 to +70 °C

TYPICAL OPERATING CONDITIONS [1]

Frequency Range	9.31 to 9.51	GHz
Peak Transmitter Power	3	kW
Transmitter Pulse Width	0.8	μs
Pulse Repetition Rate	1000	pps
Recovery Time, 3 dB	1.0	μs
Spike Leakage	0.15	erg
Flat Leakage	50	mW
Insertion Loss	0.6	dB
Ignitor Current[3]	150	μAdc
Ignitor Voltage Drop	235	Vdc

OUTLINE DRAWING

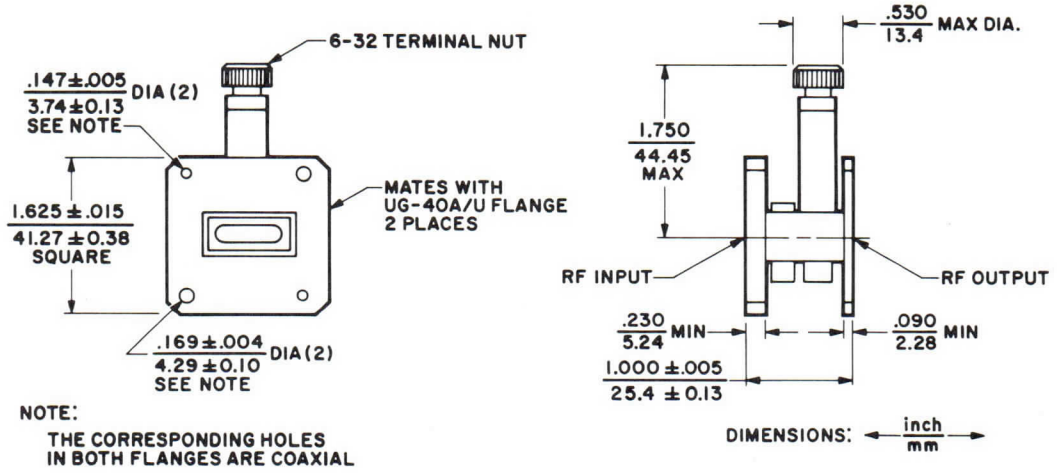

3485 5/76

Printed in U.S.A.

CHARACTERISTIC CURVES [1]

Typical performance values

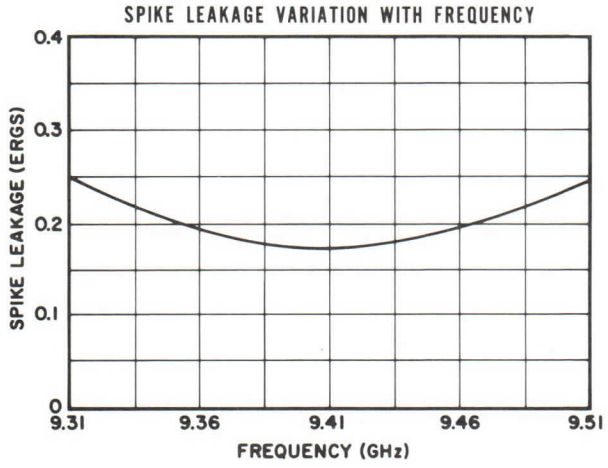

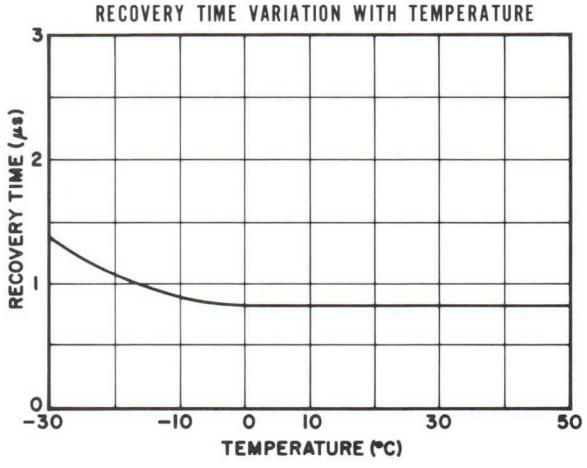

NOTES:

1. General characteristics, operating conditions, and characteristic curves are based on performance tests. These figures may change without notice as the result of additional performance data or product refinement. The Varian Beverly Division should be consulted before using this information for final equipment design.

2. Distance of the effective r-f short circuit behind the face of the input flange.

3. To calculate the value of ignitor series resistance required, use the following formula:

$$R_i = \frac{Ebb-Eid}{I_i}$$

where

R_i = Total ignitor-circuit series resistance in megohms
Ebb = Ignitor open-circuit supply voltage in volts
Eid = Ignitor voltage drop in volts
I_i = Ignitor current in microamperes

Example: $R_i = \frac{700-225}{150} = \frac{475}{150} = 3.167$ megohms

(To prevent oscillation, at least 0.5 megohm of the total series resistance should be close to the ignitor cap.)

varian
eastern tube division

TECHNICAL DATA

BTR-639

SINGLE TR TUBE

9.335-9.415 GHz

DESCRIPTION

The BTR-639 is a single bandpass TR tube which operates in the frequency range of 9.335 to 9.415 gigahertz. This X-band receiver protector was designed specifically for operation in AVQ-20, AVQ-45, and AVQ-47 weather radars. Operating life expectancy is greater than 750 hours.

OUTLINE DRAWING

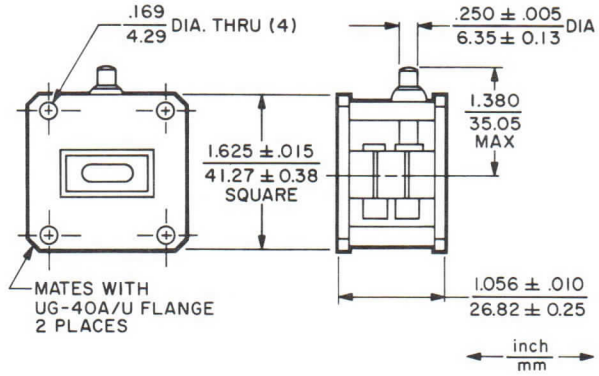

GENERAL CHARACTERISTICS[1]

ELECTRICAL

Frequency Range	9.335-9.415	GHz
Peak Power	2	kW
Duty Cycle	0.001	
Recovery Time	10	μs
Spike Leakage, max	0.25	erg
Flat Leakage, max	50	mW
Insertion Loss	0.7	dB
Ignitor Open Circuit Voltage, min	-700	Vdc
Ignitor Voltage Drop	175-375	Vdc
VSWR	1.4:1	

PHYSICAL

Dimensions	See Outline Drawing
Weight, approx	4 oz
Mating Flanges	UG-40A/U or equivalent

ENVIRONMENTAL

Altitude	70,000	ft
Vibration, 50 ± 2 Hz	15	G
Pressurization	30	$lbf/in^2 g$
Operating Temperature	-40 to +70	°C

TYPICAL OPERATING CONDITIONS[1]

Frequency Range	9.335-9.415	GHz
Peak Transmitter Power	2	kW
Transmitter Pulse Width	2	μs
Pulse Repetition Rate	400	pps
Recovery Time	4	μs
Breakdown Power	150	mW
Spike Leakage	0.18	erg
Flat Leakage	30	mW
Insertion Loss	0.6	dB
Ignitor Current[2]	150	μAdc
Ignitor Voltage Drop	225	Vdc

3036 6/73

Printed in U.S.A.

CHARACTERISTIC CURVES [1]

Typical performance values

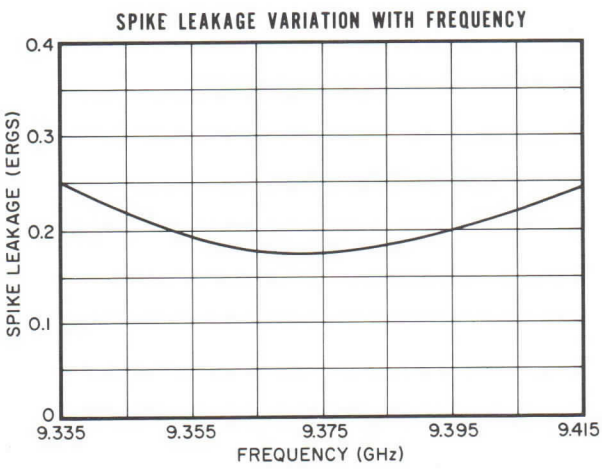

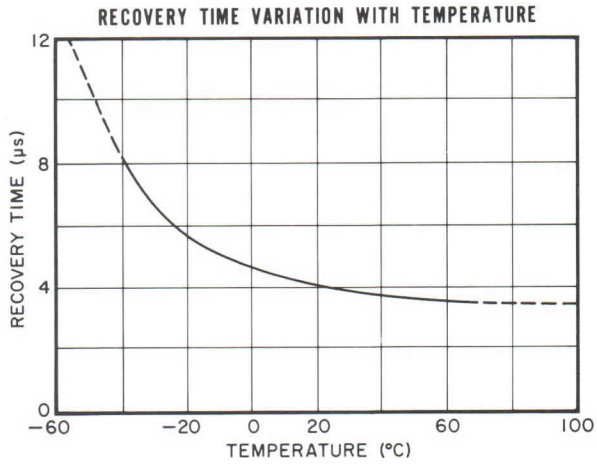

NOTES:

1. General characteristics, operating conditions, and characteristic curves are based on performance tests. These figures may be changed without notice as the result of additional performance data or product refinement. The Varian Eastern Tube Division should be consulted before using this information for final equipment design.

2. To calculate the value of ignitor series resistance required, use the following formula:

$$R_i = \frac{Ebb-Eid}{I_i}$$

where

R_i = Total ignitor-circuit series resistance in megohms
Ebb = Ignitor open-circuit supply voltage in volts
Eid = Ignitor voltage drop in volts
I_i = Ignitor current in microamperes

Example: $R_i = \frac{700-225}{150} = \frac{475}{150} = 3.167$ megohms

(To prevent oscillation, at least 0.5 megohm of the total series resistance should be close to the ignitor cap.)

varian

TECHNICAL DATA

BTR-673

SINGLE TR TUBE

9.3-9.5 GHz

DESCRIPTION

The BTR-673 is a single bandpass TR tube which operates in the frequency range of 9.3 to 9.5 gigahertz. This X-band receiver protector was designed specifically for operation in Marconi Raymac 1, 2, 12, 12HD, and 16 as well as in ASTARON BIRD models ASTARON 200, 250, 300/300R marine radars. Operating life expectancy is greater than 500 hours.

GENERAL CHARACTERISTICS [1]

ELECTRICAL

Frequency Range	9.3-9.5 GHz
Peak Power, max	100 kW
Duty Cycle	0.001
Recovery Time, 3 dB	3 μs
Spike Leakage, max	0.20 erg
Flat Leakage, max	75 mW
Insertion Loss	0.7 dB
Ignitor Open Circuit Voltage, min	-700 Vdc
Ignitor Voltage Drop	172-375 Vdc
VSWR	1.3:1
Position of Short[2]	0.011-0.031 in/0.28-0.79 mm

PHYSICAL

Dimensions	See Outline Drawing
Weight, approx	4 oz/113.6 g
Mating Flanges	UG-40A/U or equivalent

ENVIRONMENTAL

Altitude	70,000 ft/21 km
Vibration, 50 ± 2 Hz	15 G
Pressurization	30 lbf/in²g
Operating Temperature	-30 to +70 °C

TYPICAL OPERATING CONDITIONS [1]

Frequency Range	9.3-9.5 GHz
Peak Transmitter Power	20 kW
Transmitter Pulse Width	1 μs
Pulse Repetition Rate	1000 pps
Recovery Time	2 μs
Spike Leakage	0.15 erg
Flat Leakage	50 mW
Insertion Loss	0.6 dB
Ignitor Current[3]	150 μAdc
Ignitor Voltage Drop	235 Vdc

OUTLINE DRAWING

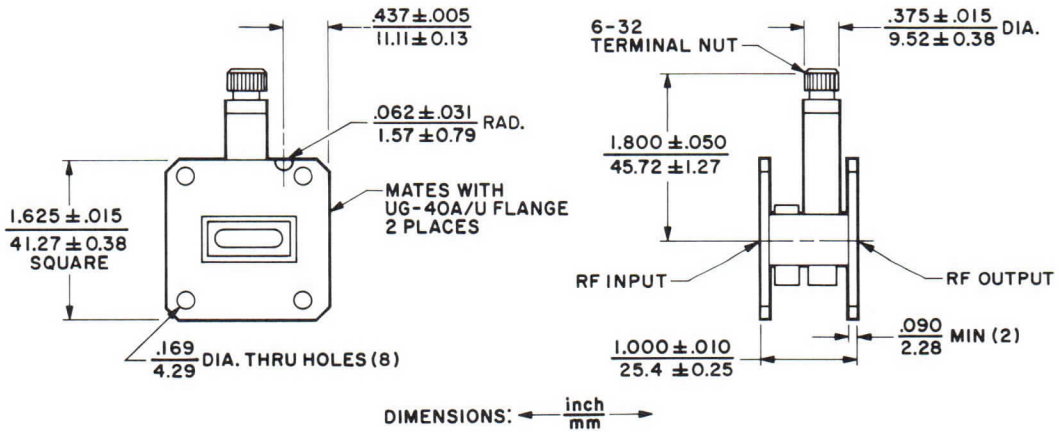

3486 1/76

Printed in U.S.A.

CHARACTERISTIC CURVES [1]

Typical performance values

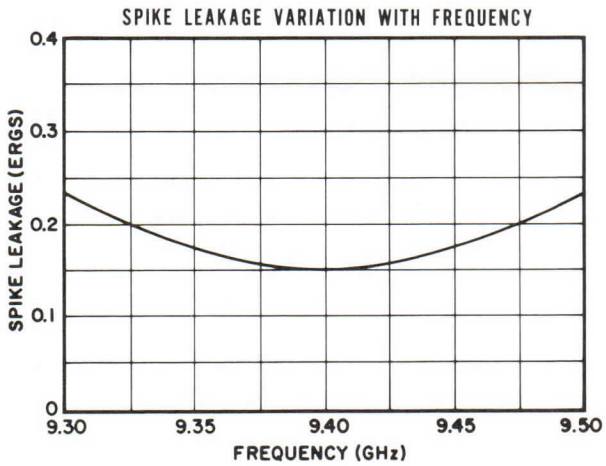

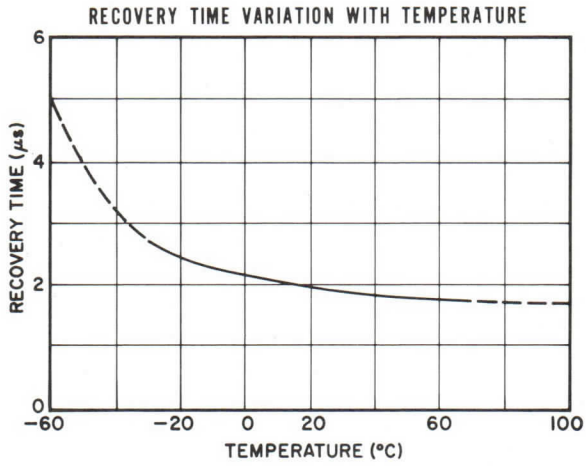

NOTES:

1. General characteristics, operating conditions, and characteristic curves are based on performance tests. These figures may change without notice as the result of additional performance data or product refinement. Varian/Beverly should be consulted before using this information for final equipment design.

2. Distance of the effective rf short circuit behind face of input flange.

3. To calculate the value of ignitor series resistance required, use the following formula:

$$R_i = \frac{Ebb-Eid}{I_i}$$

where

R_i = Total ignitor-circuit series resistance in megohms
Ebb = Ignitor open-circuit supply voltage in volts
Eid = Ignitor voltage drop in volts
I_i = Ignitor current in microamperes

Example: $R_i = \frac{700-225}{150} = \frac{475}{150} = 3.167$ megohms

(To prevent oscillation, at least 0.5 megohm of the total series resistance should be close to the ignitor cap.)

varian beverly

TECHNICAL DATA

VDX-1006

DURATEMP® PASSIVE TR-LIMITER

8.5-9.6 GHz

DESCRIPTION

The VDX-1006 is a bandpass DURATEMP passive TR limiter (TRL) which operates in the frequency range of 8.5 to 9.6 gigahertz. This X-band device provides low leakage power and exceptionally fast recovery time over a wide range of incident power. The TRL crystal-protector device employs special high-temperature processing techniques which greatly increase normal shelf and operating life. The TRL protector will maintain stable operation over a wide temperature range. The VDX-1006 has a design life of 2000 hours.

OUTLINE DRAWING

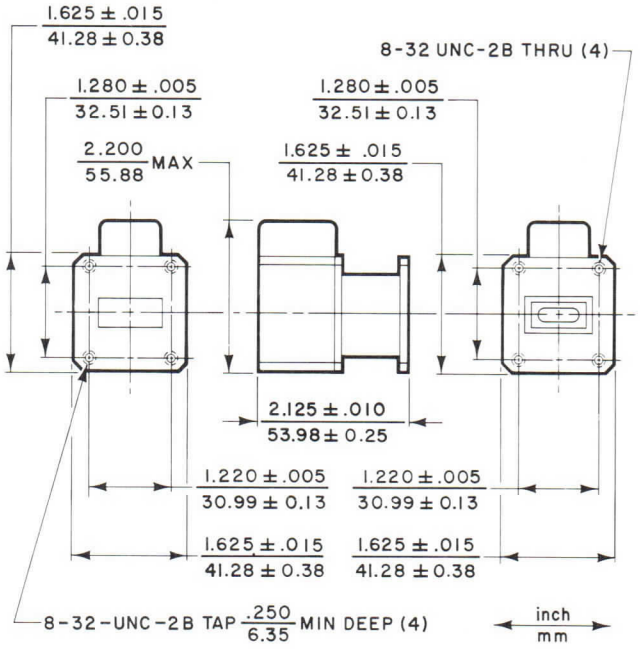

GENERAL CHARACTERISTICS [1]

ELECTRICAL

Frequency Range	8.5-9.6 GHz
Peak Power, max	100 kW
Duty Cycle	0.001
Recovery Time	1.5 μs
Spike Leakage Power, max	0.05 erg
Flat Leakage Power, max	50 mW
VSWR	1.4:1
Insertion Loss, max	1.0 dB

PHYSICAL

Dimensions	See Outline Drawing
Weight, approx	8.5 oz
Mating Flanges	UG-40A/U

ENVIRONMENTAL

Altitude	70,000 ft
Vibration, 50 ± 2 Hz	15 G
Pressurization	30 lbf/in^{2}g
Operating Temperature	-55 to +100 °C

TYPICAL OPERATING CONDITIONS [1]

Frequency Range	8.5-9.6 GHz
Peak Transmitter Power	10 kW
Transmitter Pulse Width	1.0 μs
Pulse Repetition Rate	1000 pps
Recovery Time	0.8 μs
Breakdown Power	80 mW
Spike Leakage	0.02 erg
Flat Leakage	20 mW
Insertion Loss	0.8 dB

3369 3/75

Printed in U.S.A.

CHARACTERISTIC CURVES
Typical Performance Values

SPIKE LEAKAGE VARIATION WITH FREQUENCY

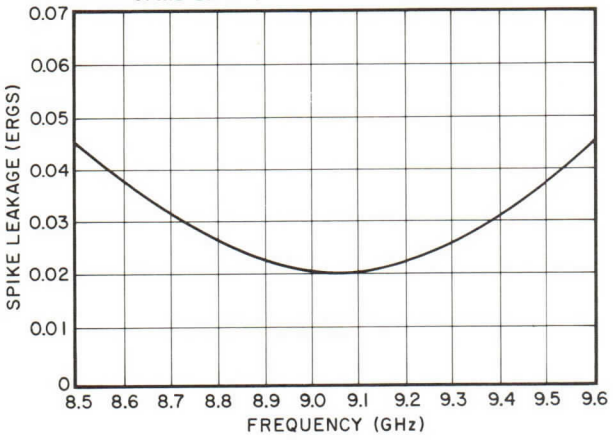

SPIKE LEAKAGE VARIATION WITH PULSE REPETITION RATE

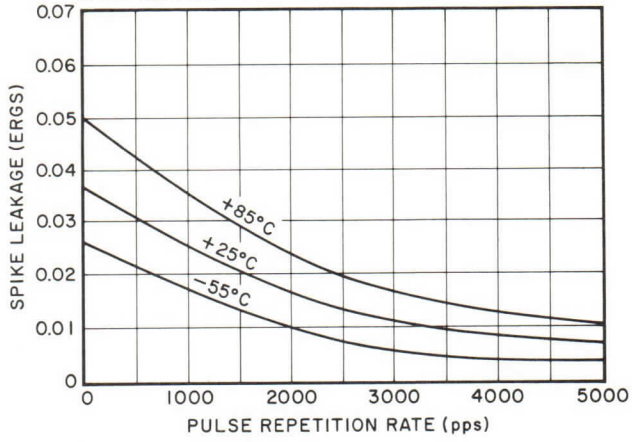

RECOVERY TIME VARIATION WITH TEMPERATURE

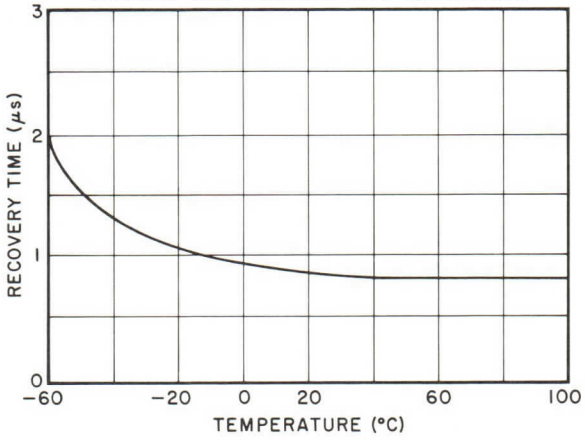

NOTE:

1. Characteristics and operating values are based on performance tests. These figures may change without notice as a result of additional data or product refinement. Consult Varian Beverly before using this information for final equipment design.

varian
solid state division

TECHNICAL DATA

VDX-1010

DURATEMP® SINGLE PASSIVE TR-LIMITER AND NOISE SOURCE

9.0-9.6 GHz

DESCRIPTION

The VDX-1010 is a bandpass DURATEMP passive TR Limiter (TRL) with integral noise source. It operates in the frequency range of 9.0 to 9.6 gigahertz. The integral noise source typically operates from 28.0 to 50.0 volts. It can supply a calibrated noise level at any specified value between 5.0 and 15.0 dB, with an accuracy of ±1.5 dB, over the entire operating temperature range.

This X-band device provides low leakage power and exceptionally fast recovery time over a wide range of incident power. The TRL employs special high-temperature processing techniques which greatly increase shelf and operating life. The TRL maintains stable operation over a wide temperature range. Life expectancy is greater than 2000 hours.

OUTLINE DRAWING

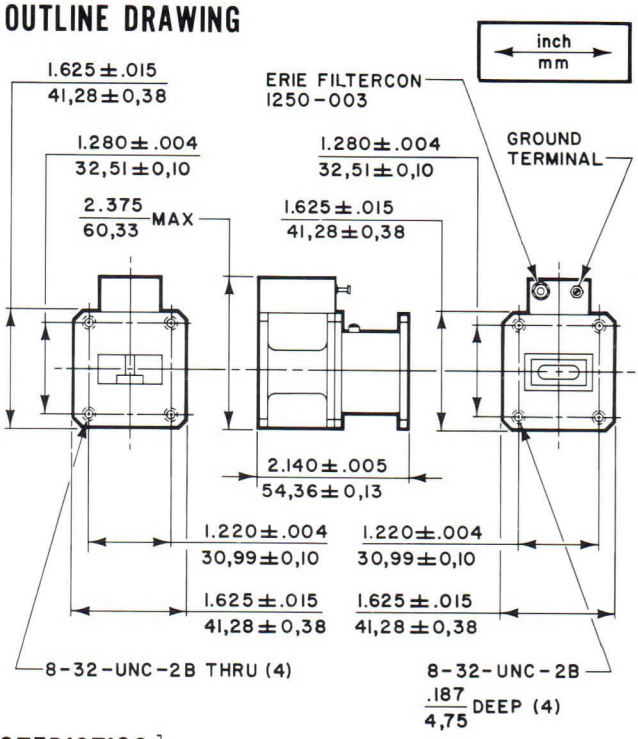

GENERAL CHARACTERISTICS[1]

ELECTRICAL

Frequency Range	9.0-9.6 GHz
Peak Power, max	100 kW
Duty Cycle	0.001
Recovery Time, max	1.0 μs
Noise Level, max[2]	15 dB
Insertion Loss, max	1.0 dB
Spike Leakage, max	0.05 erg
Flat Leakage, max	50 mW
VSWR	1.4:1

PHYSICAL

Dimensions	See Outline Drawing
Weight, approx	8.5 oz
Mating Flange	UG-40A/U

ENVIRONMENTAL

Altitude	70,000 ft
Vibration, 50 ± 2 Hz	15 G
Pressurization	30 lbf/in²g
Operating Temperature	-55 to +100 °C

TYPICAL OPERATING CONDITIONS

Frequency Range	9.0-9.6 GHz
Peak Transmitter Power	10 kW
Transmitter Pulse Width	1.0 μs
Pulse Repetition Rate	1000 pps
Recovery Time	0.6 μs
Breakdown Power	50 mW
Spike Leakage	0.02 erg
Flat Leakage	30 mW
Noise Level[2]	9.0 ± 1.5 dB
Insertion Loss	0.75 dB

NOTES:

1. General characteristics and characteristic curves are based on performance tests. These figures may change without notice as a result of additional data or product refinement. The Varian Solid State Division should be consulted before using this information for final equipment design.
2. Customer may specify the noise level desired.

2484 10/70

Printed in U.S.A.

CHARACTERISTIC CURVES[1]

Typical Performance Values

SPIKE LEAKAGE VARIATION WITH FREQUENCY

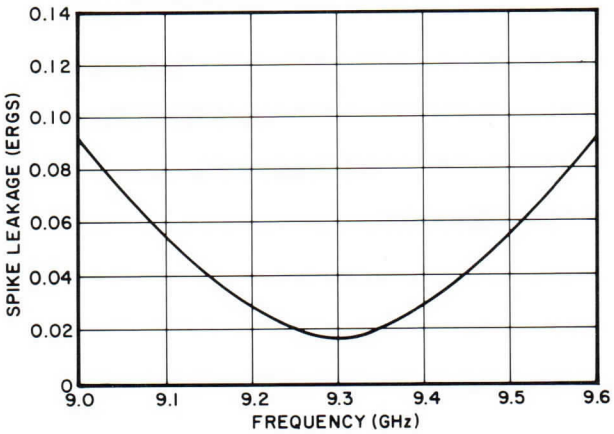

SPIKE LEAKAGE VARIATION WITH PULSE REPETITION RATE

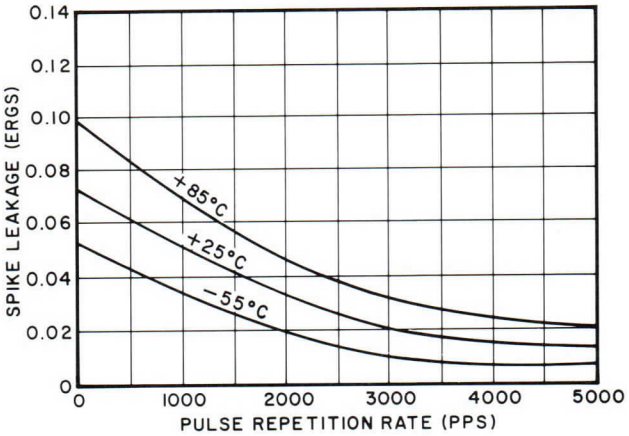

RECOVERY TIME VARIATION WITH TEMPERATURE

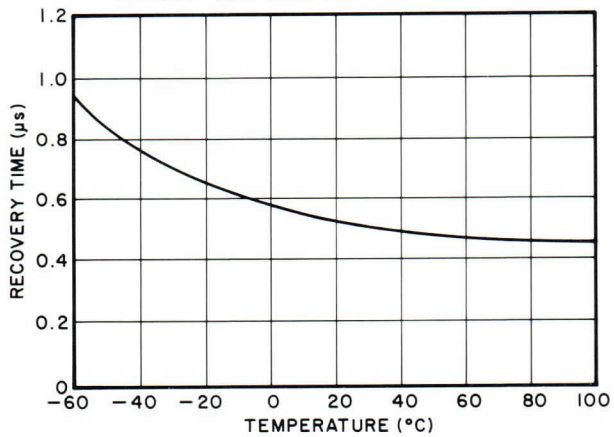

NOISE GENERATED DURING REVERSE BIAS PERIOD

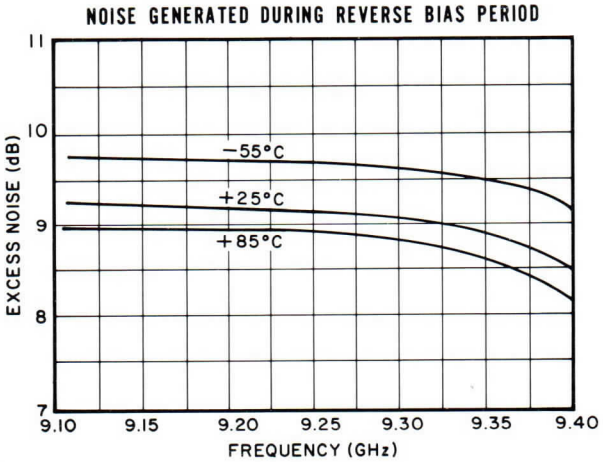

NOISE VARIATION WITH REVERSE CURRENT

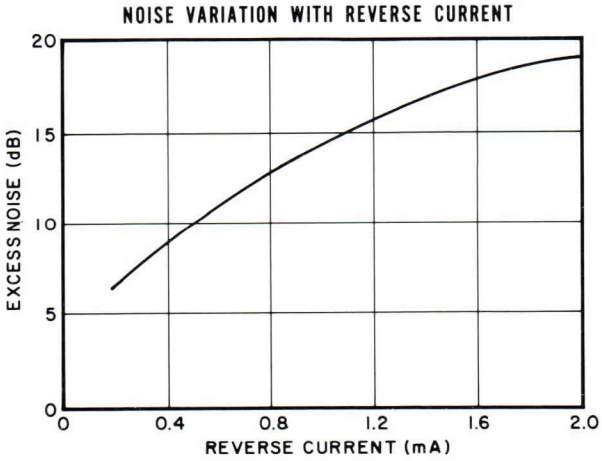

varian
solid state division

TECHNICAL DATA

VDU-1011

DURATEMP® DUAL PASSIVE TR-LIMITER

16.5-17.0 GHz

DESCRIPTION

The VDU-1011 is a dual bandpass DURATEMP passive TR-Limiter (TRL), which operates in the frequency range of 16.5 to 17.0 gigahertz. This Ku-band duplexing provides low leakage power and exceptionally fast recovery time over a wide range of incident power. This TRL employs special high-temperature processing techniques which greatly increase shelf and operating life. It maintains stable operation over a wide temperature range. Operating life expectancy is greater than 2000 hours.

OUTLINE DRAWING

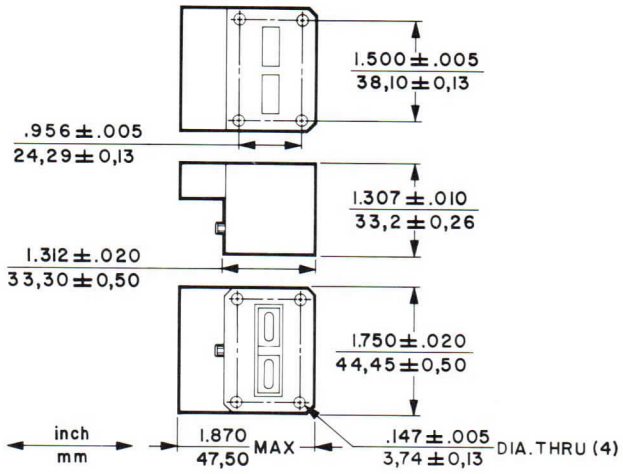

GENERAL CHARACTERISTICS[1]

ELECTRICAL

Frequency Range	16.5-17.0 GHz
Peak Power	125 kW
Duty Cycle	0.001
Recovery Time	1.0 μs
Spike Leakage, max	0.05 erg
Flat Leakage, max	50 mW
Insertion Loss, max	1.0 dB
Phase Control	±3.0 °
VSWR	1.3:1

PHYSICAL

Dimensions	See Outline Drawing
Weight, approx	8.5 oz
Mating Flanges	Special

ENVIRONMENTAL

Altitude	70,000 ft
Vibration, 50 ± 2 Hz	15 G
Pressurization	30 lbf/in²g
Operating Temperature	-55 to +90 °C

TYPICAL OPERATING CONDITIONS

Frequency Range	16.5-17.0 GHz
Peak Transmitter Power	85 kW
Transmitter Pulse Width	0.5 μs
Pulse Repetition Rate	2000 pps
Recovery Time	0.7 μs
Breakdown Power	100 mW
Spike Leakage	0.01 erg
Flat Leakage	10 mW
Insertion Loss	0.8 dB

2485 11/70

Printed in U.S.A.

NOTE:

1. General characteristics and characteristic curves are based on performance tests. These figures may be changed without notice as the result of additional performance data or product refinement. The Varian Solid State Division should be consulted before using this information for final equipment design.

CHARACTERISTIC CURVES[1]

Typical performance values

SPIKE LEAKAGE VARIATION WITH FREQUENCY

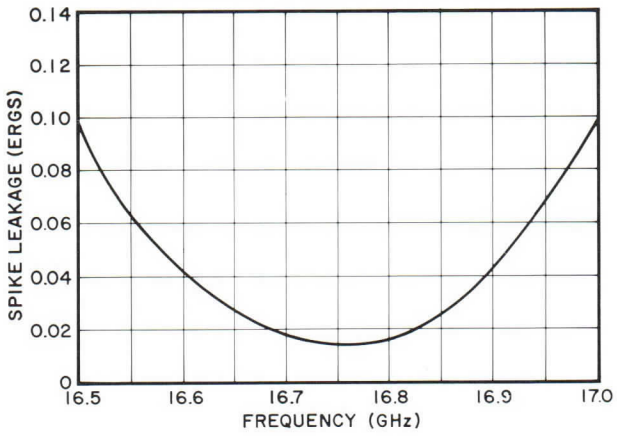

SPIKE LEAKAGE VARIATION WITH PULSE REPETITION RATE

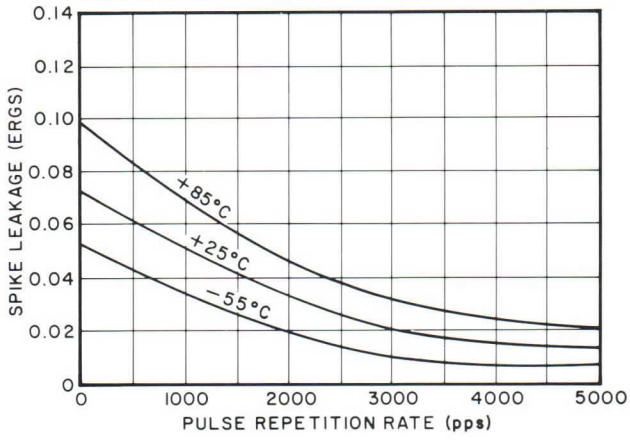

RECOVERY TIME VARIATION WITH TEMPERATURE

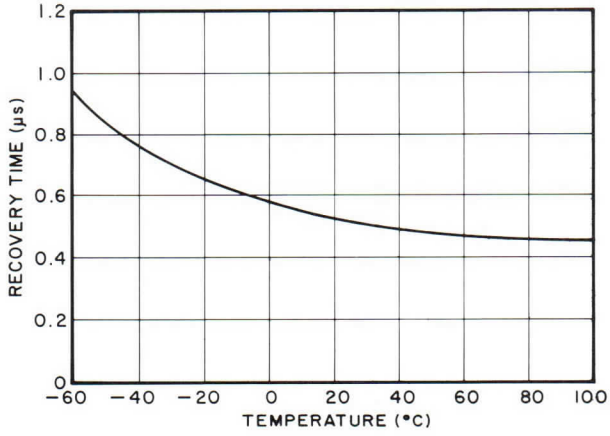

varian
solid state division

TECHNICAL DATA

VDU-1012

DURATEMP® SINGLE PASSIVE TR-LIMITER

16.5-17.0 GHz

DESCRIPTION

The VDU-1012 is a single bandpass DURATEMP Passive TR Limiter (TRL), which operates in the frequency range of 16.5 to 17.0 gigahertz. This Ku-band receiver protector provides low leakage power and exceptionally fast recovery time over a wide range of incident power. This TRL employs special high-temperature processing techniques which greatly increase shelf and operating life. It maintains stable operation over a wide temperature range. Operating life expectancy is greater than 2000 hours.

OUTLINE DRAWING

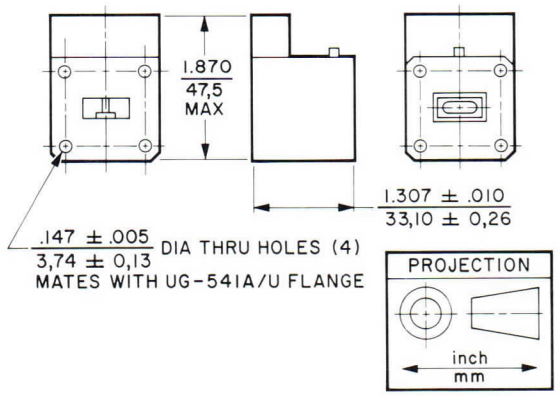

GENERAL CHARACTERISTICS[1]

ELECTRICAL

Frequency Range	16.5-17.0	GHz
Peak Power	15	kW
Duty Cycle	0.001	
Recovery Time, max	1.0	μs
Spike Leakage, max	0.1	erg
Flat Leakage, max	50	mW
Insertion Loss	1.0	dB
Phase Control	±3.0	°
VSWR	1.4:1	

PHYSICAL

Dimensions	See Outline Drawing
Weight, approx	6.0 oz
Mating Flanges	UG-541A/U

ENVIRONMENTAL

Altitude	70,000	ft
Vibration, 50 ± 2 Hz	15	G
Pressurization	30	lbf/in^2g
Operating Temperature	-55 to +90	°C

TYPICAL OPERATING CONDITIONS

Frequency Range	16.5-17.0	GHz
Peak Transmitter Power	10	kW
Transmitter Pulse Width	0.5	μs
Pulse Repetition Rate	2000	pps
Recovery Time	0.7	μs
Breakdown Power	100	mW
Spike Leakage	0.05	erg
Flat Leakage	30	mW
Insertion Loss	0.8	dB

2486 11/70

Printed in U.S.A.

varian/solid state division/salem road/beverly/massachusetts 01915

NOTE:

1. General characteristics and characteristic curves are based on performance tests. These figures may be changed without notice as the result of additional performance data or product refinement. The Varian Solid State Division should be consulted before using this information for final equipment design.

CHARACTERISTIC CURVES[1]

Typical performance values

SPIKE LEAKAGE VARIATION WITH FREQUENCY

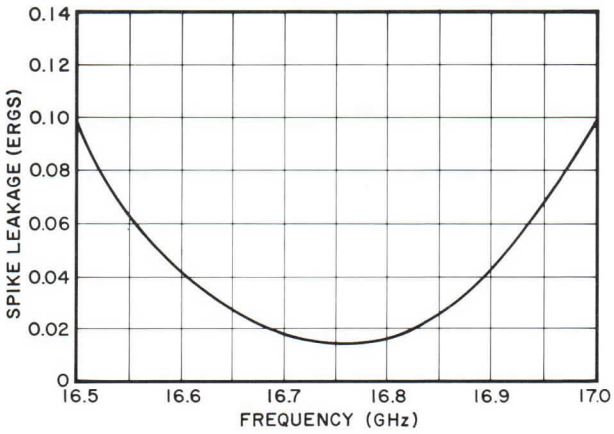

SPIKE LEAKAGE VARIATION WITH PULSE REPETITION RATE

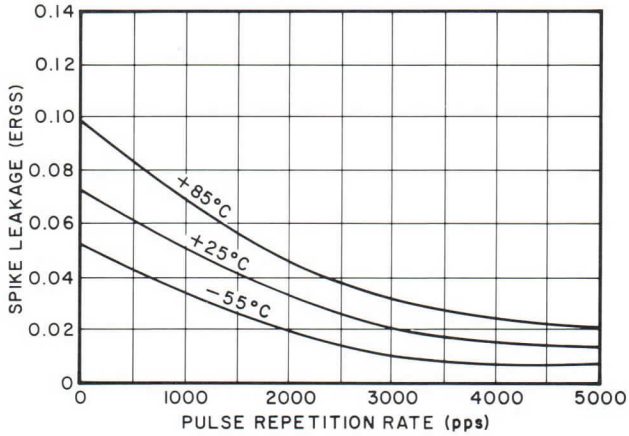

RECOVERY TIME VARIATION WITH TEMPERATURE

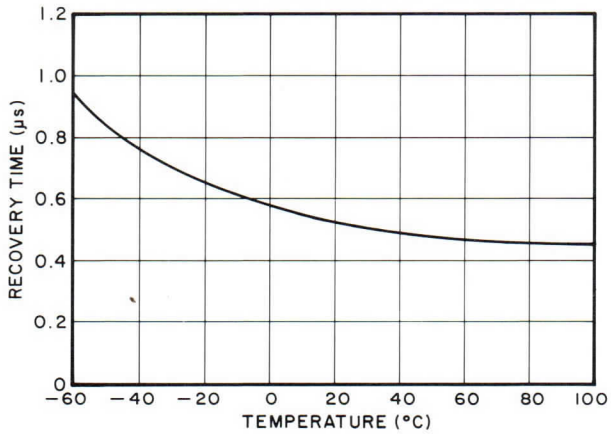

varian

TECHNICAL DATA

VDX-1014

DURATEMP ®
SINGLE PASSIVE
TR LIMITER

9.305-9.405 GHz

DESCRIPTION

The VDX-1014 is a single bandpass DURATEMP Passive TR Limiter (TRL) which operates in the frequency range of 9.305 to 9.405 gigahertz. This X-band receiver protector provides low leakage power and exceptionally fast recovery time over a wide range of incident power. The VDX-1014 was designed especially for operation in AVQ-21A weather radars. The TRL employs special high-temperature processing techniques which greatly increase shelf and operating life. It maintains stable operation over a wide temperature range. Operating life expectancy is greater than 2500 hours.

GENERAL CHARACTERISTICS [1]

ELECTRICAL [2]

Frequency Range	9.305-9.405 GHz
Peak Power	10 kW
Duty Cycle	0.001
Recovery Time	1.5 μs
Spike Leakage, max	0.1 erg
Flat Leakage, max	50 mW
Insertion Loss	0.7 dB
VSWR	1.3:1

PHYSICAL

Dimensions	See Outline Drawing
Weight, approx	8 oz/227 g
Mating Flanges	UG-135/U or equivalent

ENVIRONMENTAL

Altitude	70,000 ft/21 km
Vibration, 50 ± 2 Hz	15 G
Pressurization	30 lbf/in² g
Operating Temperature	-55 to +90 °C

TYPICAL OPERATING CONDITIONS [1]

Frequency Range	9.305-9.405 GHz
Peak Transmitter Power	10 kW
Transmitter Pulse Width	3.5 μs
Pulse Repetition Rate	265 pps
Recovery Time	0.9 μs
Breakdown Power	40 mW
Spike Leakage	0.05 erg
Flat Leakage	40 mW
Insertion Loss	0.6 dB

OUTLINE DRAWING

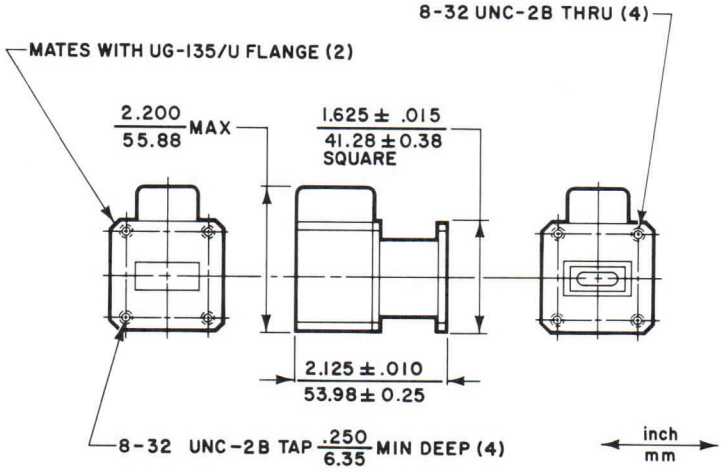

3487 1/76

Printed in U.S.A.

CHARACTERISTIC CURVES [1]

Typical performance values

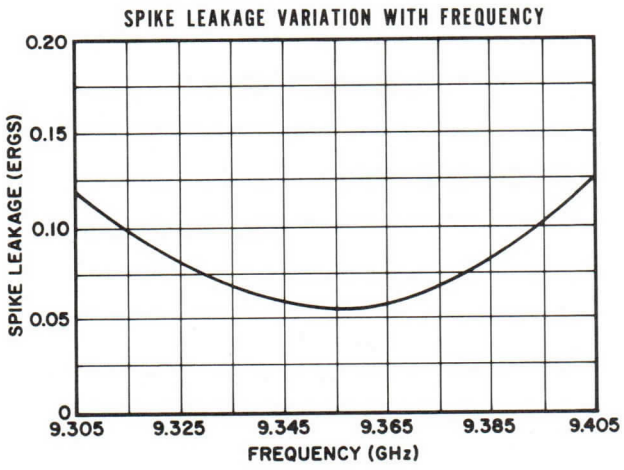

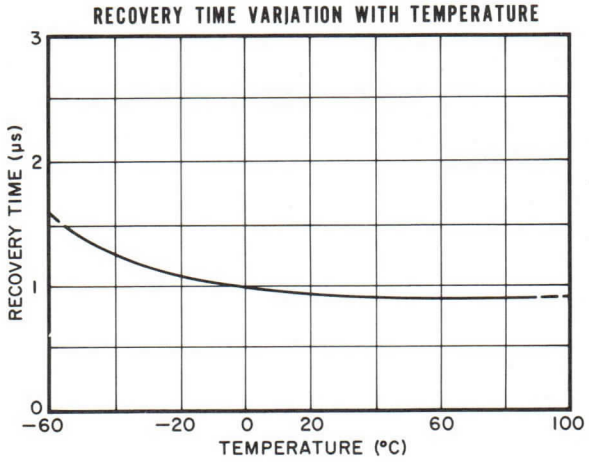

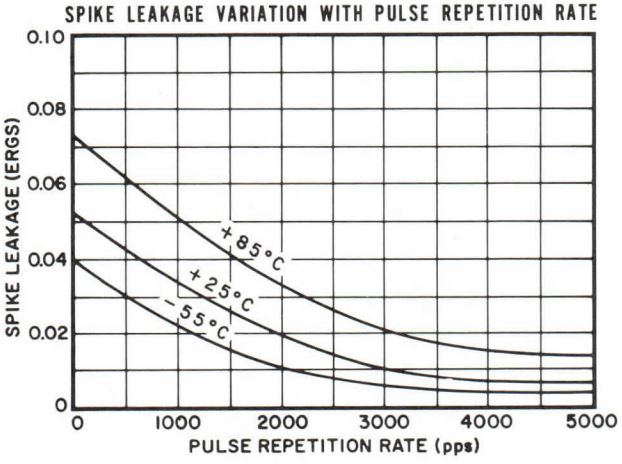

NOTES:

1. General characteristics, operating conditions and characteristic curves are based on performance tests. These figures may change without notice as the result of additional performance data or product refinement. Varian Beverly should be consulted before using this information for final equipment design.
2. Values apply at 25°C and sea level atmospheric pressure.

varian
solid state division

TECHNICAL DATA

VDU-1017

DURATEMP® DUAL PASSIVE TR-LIMITER

16.0-17.0 GHz

DESCRIPTION

The VDU-1017 is a dual bandpass DURATEMP passive TR Limiter (TRL) which operates in the frequency range of 16.0 to 17.0 gigahertz. This Ku-band duplexing device provides low leakage power and exceptionally fast recovery time over a wide range of incident power. The TRL employs special high-temperature processing techniques which greatly increase shelf and operating life. It maintains stable operation over a wide temperature range. Operating life expectancy is greater than 2000 hours.

OUTLINE DRAWING

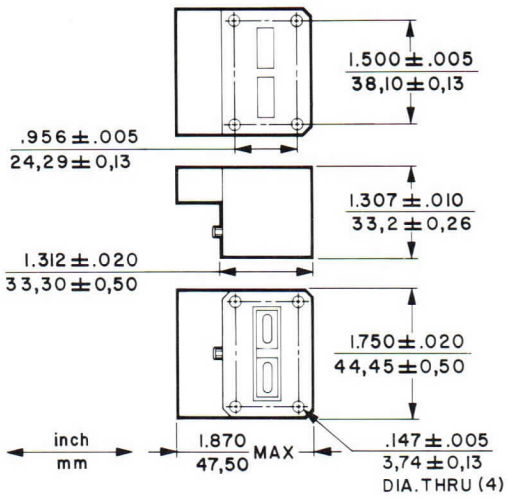

GENERAL CHARACTERISTICS[1]

ELECTRICAL

Frequency Range	16.0-17.0	GHz
Peak Power	125	kW
Duty Cycle	0.001	
Recovery Time	1.0	μs
Spike Leakage, max	0.05	erg
Flat Leakage, max	50	mW
Insertion Loss, max	1.1	dB
Phase Control	±3.0	°
VSWR	1.4:1	

PHYSICAL

Dimensions	See Outline Drawing
Weight, approx	8.5 oz
Mating Flanges	Special

ENVIRONMENTAL

Altitude	70,000	ft
Vibration, 50 ± 2 Hz	15	G
Pressurization	30	lbf/in²g
Operating Temperature	-55 to +90	°C

TYPICAL OPERATING CONDITIONS

Frequency Range	16.0-17.0	GHz
Peak Transmitter Power	85	kW
Transmitter Pulse Width	0.5	μs
Pulse Repetition Rate	2000	pps
Recovery Time	0.7	μs
Breakdown Power	100	mW
Spike Leakage	0.01	erg
Flat Leakage	10	mW
Insertion Loss	0.9	dB

NOTE:

1. General characteristics and characteristic curves are based on performance tests. These figures may be changed without notice as the result of additional performance data or product refinement. The Varian Solid State Division should be consulted before using this information for final equipment design.

2487 11/70

Printed in U.S.A.

CHARACTERISTIC CURVES [1]

Typical performance values

SPIKE LEAKAGE VARIATION WITH FREQUENCY

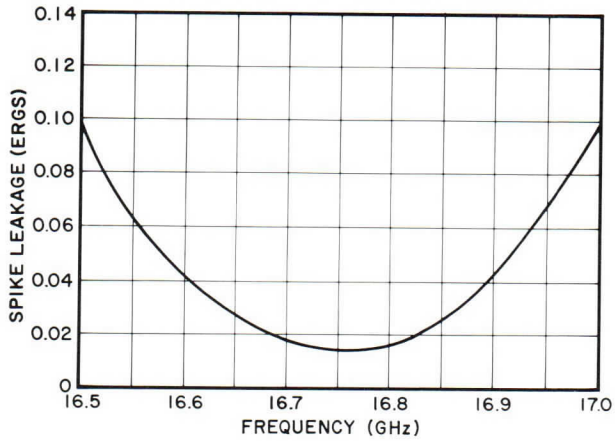

SPIKE LEAKAGE VARIATION WITH PULSE REPETITION RATE

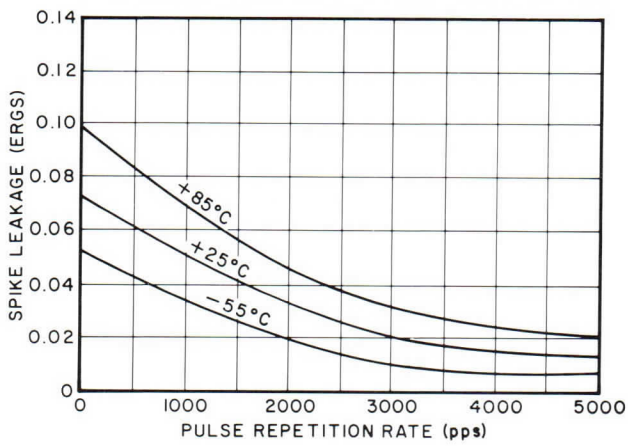

RECOVERY TIME VARIATION WITH TEMPERATURE

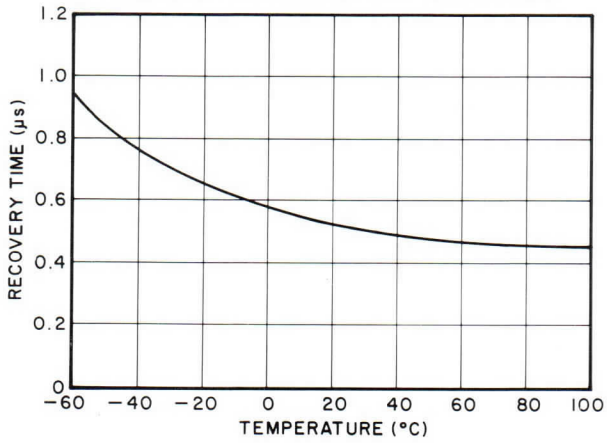

varian
solid state division

TECHNICAL DATA

VDU-1018

DURATEMP® SINGLE PASSIVE TR LIMITER

16.0-17.0 GHz

DESCRIPTION

The VDU-1018 is a single bandpass DURATEMP Passive TR Limiter (TRL) which operates in the frequency range of 16.0 to 17.0 gigahertz. This Ku-band receiver protector provides low leakage power and exceptionally fast recovery time over a wide range of incident power. The TRL employs special high-temperature processing techniques which greatly increase shelf and operating life. It maintains stable operation over a wide temperature range. Operating life expectancy is greater than 2000 hours.

OUTLINE DRAWING

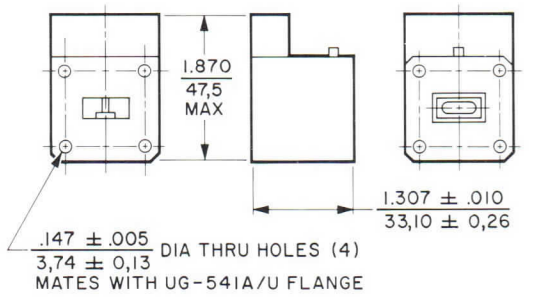

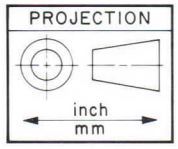

GENERAL CHARACTERISTICS[1]

ELECTRICAL

Frequency Range	16.0-17.0	GHz
Peak Power	15	kW
Duty Cycle	0.001	
Recovery Time	1.0	μs
Spike Leakage, max	0.1	erg
Flat Leakage, max	60	mW
Insertion Loss	1.1	dB
Phase Control	±3.0	°
VSWR	1.4:1	

PHYSICAL

Dimensions	See Outline Drawing
Weight, approx	6 oz
Mating Flanges	UG-541A/U

ENVIRONMENTAL

Altitude	70,000	ft
Vibration, 50 ± 2 Hz	15	G
Pressurization	30	lbf/in^2g
Operating Temperature	-55 to +90	°C

TYPICAL OPERATING CONDITIONS

Frequency Range	16.0-17.0	GHz
Peak Transmitter Power	10	kW
Transmitter Pulse Width	0.5	μs
Pulse Repetition Rate	2000	pps
Recovery Time	0.7	μs
Breakdown Power	100	mW
Spike Leakage	0.05	erg
Flat Leakage	30	mW
Insertion Loss	0.9	dB

NOTE:

1. General characteristics and characteristic curves are based on performance tests. These figures may be changed without notice as the result of additional performance data or product refinement. The Varian Solid State Division should be consulted before using this information for final equipment design.

2488 11/70

Printed in U.S.A.

CHARACTERISTIC CURVES[1]

Typical performance values

SPIKE LEAKAGE VARIATION WITH FREQUENCY

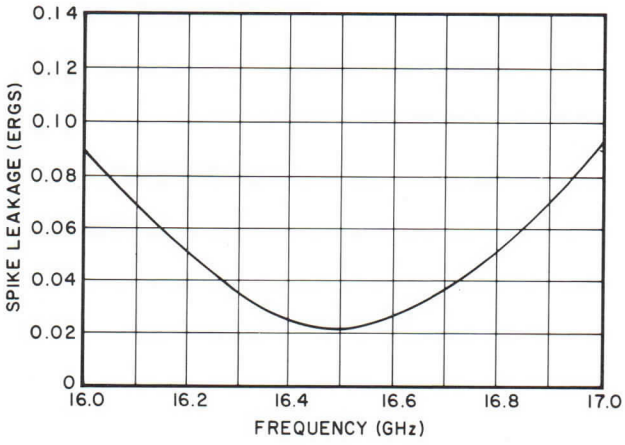

SPIKE LEAKAGE VARIATION WITH PULSE REPETITION RATE

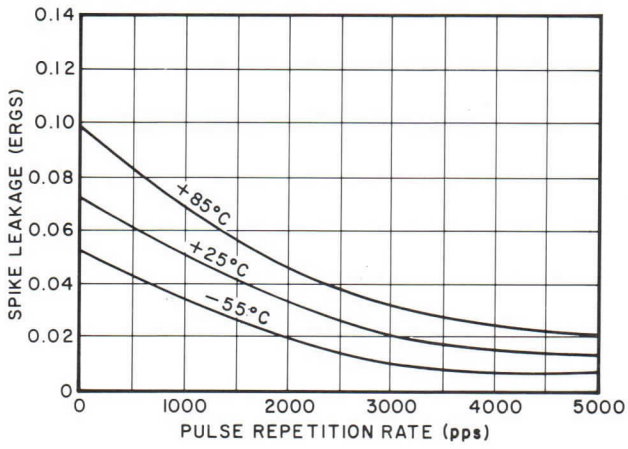

RECOVERY TIME VARIATION WITH TEMPERATURE

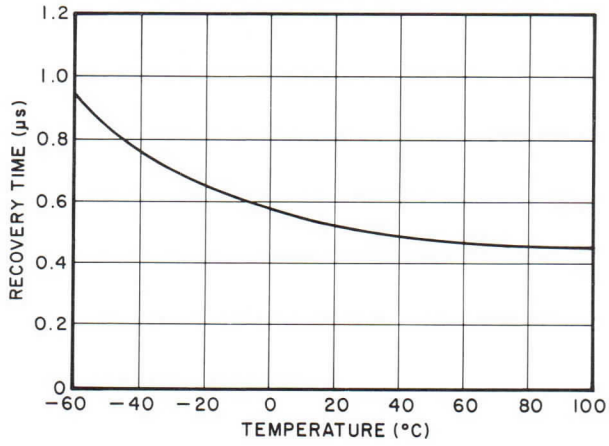

varian
solid state division

TECHNICAL DATA

VDU-1024

DURATEMP® DUAL PASSIVE TR LIMITER AND NOISE SOURCE
16.5-17.0 GHz

DESCRIPTION

The VDU-1024 is a dual bandpass DURATEMP passive TR Limiter (TRL) with integral noise source. It operates in the frequency range of 16.5 to 17.0 gigahertz. The integral noise source typically operates from 28.0 to 50.0 volts. It can supply a calibrated noise level at any specified value between 5.0 and 15.0 dB, with an accuracy of ±1.5 dB, over the entire operating temperature range.

This Ku-band duplexing device provides low leakage power and exceptionally fast recovery time over a wide range of incident power. The TRL employs special high-temperature processing techniques which greatly increase shelf and operating life. The TRL maintains stable operation over a wide temperature range. Life expectancy is greater than 2000 hours.

OUTLINE DRAWING

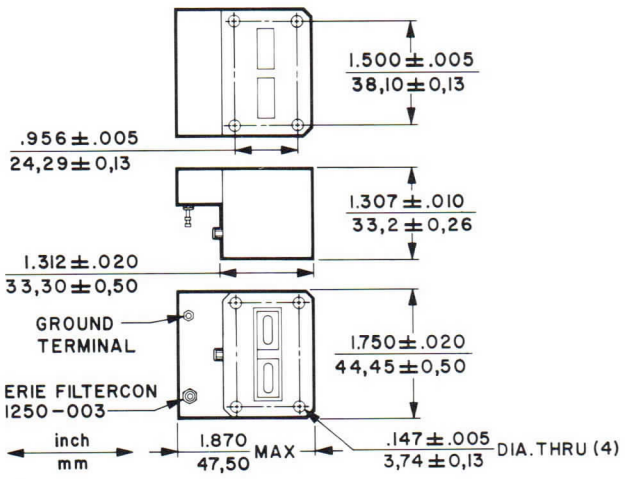

GENERAL CHARACTERISTICS[1]

ELECTRICAL

Frequency Range	16.5-17.0	GHz
Peak Power, max	125	kW
Duty Cycle	0.001	
Recovery Time	1.0	μs
Noise Level, max[2]	15	dB
Insertion Loss, max	1.0	dB
Spike Leakage, max	0.05	erg
Flat Leakage, max	50	mW
VSWR	1.4:1	

PHYSICAL

Dimensions	See Outline Drawing
Weight, approx	8.5 oz
Mating Flanges	Special

ENVIRONMENTAL

Altitude	70,000 ft
Vibration, 50 ± 2 Hz	15 G
Pressurization	30 lbf/in²g
Operating Temperature	-55 to +90 °C

TYPICAL OPERATING CONDITIONS

Frequency Range	16.5-17.0	GHz
Peak Transmitter Power	85	kW
Transmitter Pulse Width	0.5	μs
Pulse Repetition Rate	2000	pps
Recovery Time	0.7	μs
Breakdown Power	100	mW
Spike Leakage	0.01	erg
Flat Leakage	10	mW
Noise Level[2]	9 ± 1.5	dB
Insertion Loss	0.9	dB

NOTES:

1. General characteristics and characteristic curves are based on performance tests. These figures may change without notice as a result of additional data or product refinement. The Varian Solid State Division should be consulted before using this information for final equipment design.
2. Customer may specify the noise level desired.

2489 11/70

Printed in U.S.A.

CHARACTERISTIC CURVES[1]

Typical performance values

SPIKE LEAKAGE VARIATION WITH FREQUENCY

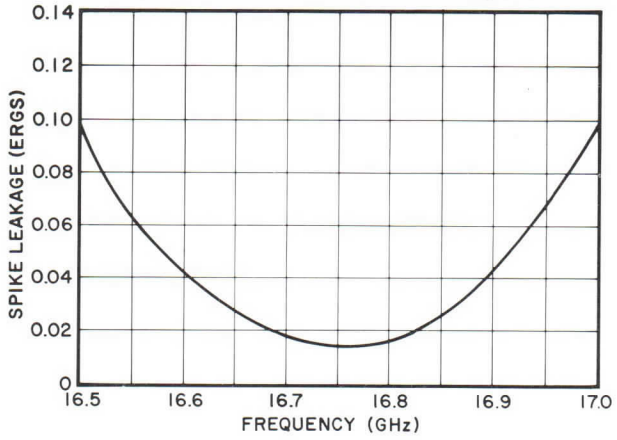

SPIKE LEAKAGE VARIATION WITH PULSE REPETITION RATE

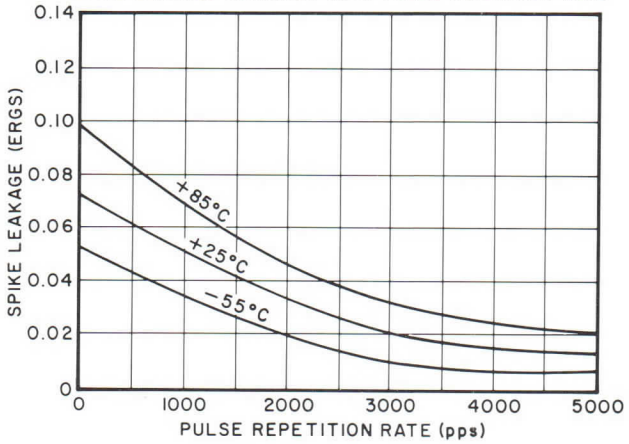

RECOVERY TIME VARIATION WITH TEMPERATURE

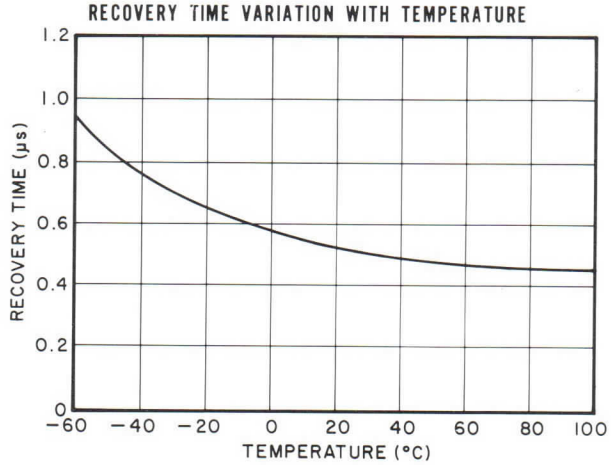

NOISE GENERATED DURING REVERSE BIAS PERIOD

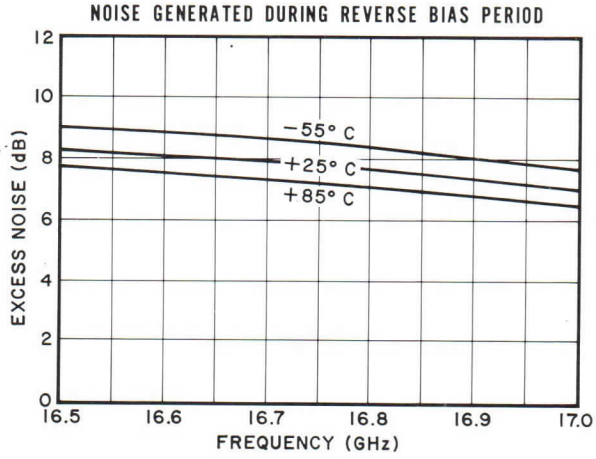

NOISE VARIATION WITH REVERSE CURRENT

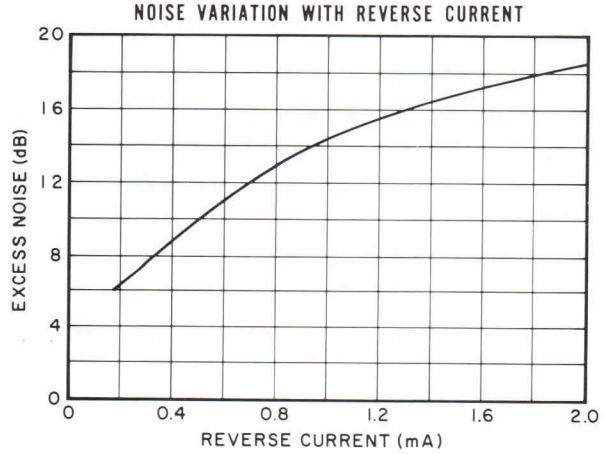

varian
solid state division

TECHNICAL DATA

VDU-1025

DURATEMP ® SINGLE PASSIVE TR LIMITER AND NOISE SOURCE

16.5-17.0 GHz

DESCRIPTION

The VDU-1025 is a single bandpass DURATEMP passive TR Limiter (TRL) with integral noise source. It operates in the frequency range of 16.5 to 17.0 gigahertz. The integral noise source typically operates from 28.0 to 50.0 volts. It can supply a calibrated noise level at any specified value between 5.0 and 15.0 dB, with an accuracy of ±1.5 dB, over the entire operating temperature range.

This Ku-band receiver protector provides low leakage power and exceptionally fast recovery time over a wide range of incident power. The TRL employs special high-temperature processing techniques which greatly increase shelf and operating life. The TRL maintains stable operation over a wide temperature range. Life expectancy is greater than 2000 hours.

OUTLINE DRAWING

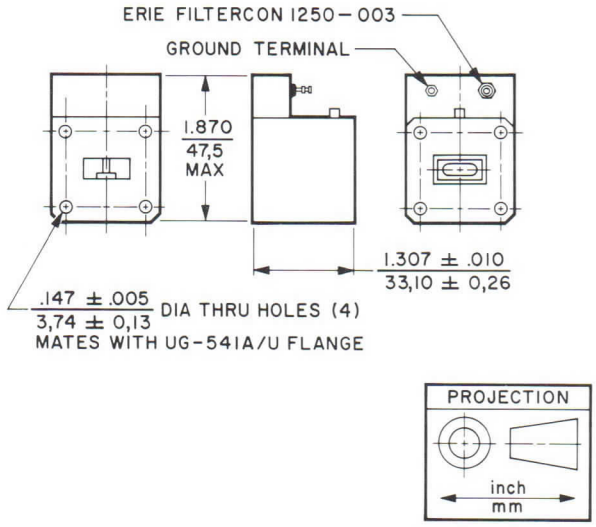

GENERAL CHARACTERISTICS[1]

ELECTRICAL

Frequency Range	16.5-17.0 GHz
Peak Power, max	15 kW
Duty Cycle	0.001
Recovery Time	1.0 μs
Noise Level, max[2]	15 dB
Insertion Loss, max	1.0 dB
Spike Leakage, max	0.1 erg
Flat Leakage, max	60 mW
Phase Control	±3.0 °
VSWR	1.4:1

PHYSICAL

Dimensions	See Outline Drawing
Weight, approx	5.0 oz
Mating Flange	UG-541A/U

ENVIRONMENTAL

Altitude	70,000 ft
Vibration, 50 ± 2 Hz	15 G
Pressurization	30 lbf/in²g
Operating Temperature	-55 to +90 °C

TYPICAL OPERATING CONDITIONS

Frequency Range	16.5-17.0 GHz
Peak Transmitter Power	10 kW
Transmitter Pulse Width	0.5 μs
Pulse Repetition Rate	2000 pps
Recovery Time	0.7 μs
Breakdown Power	100 mW
Spike Leakage	0.05 erg
Flat Leakage	30 mW
Noise Level[2]	9.0 ± 1.5 dB
Insertion Loss	0.9 dB

NOTES:

1. General characteristics and characteristic curves are based on performance tests. These figures may change without notice as a result of additional data or product refinement. The Varian Solid State Division should be consulted before using this information for final equipment design.
2. Customer may specify the noise level desired.

2490 11/70

Printed in U.S.A.

CHARACTERISTIC CURVES[1]

Typical performance values

SPIKE LEAKAGE VARIATION WITH FREQUENCY

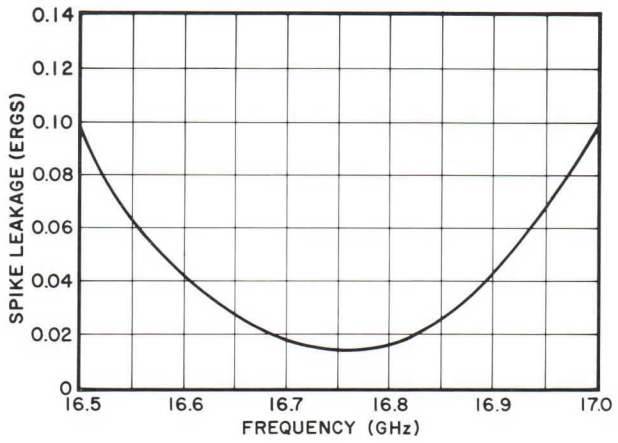

SPIKE LEAKAGE VARIATION WITH PULSE REPETITION RATE

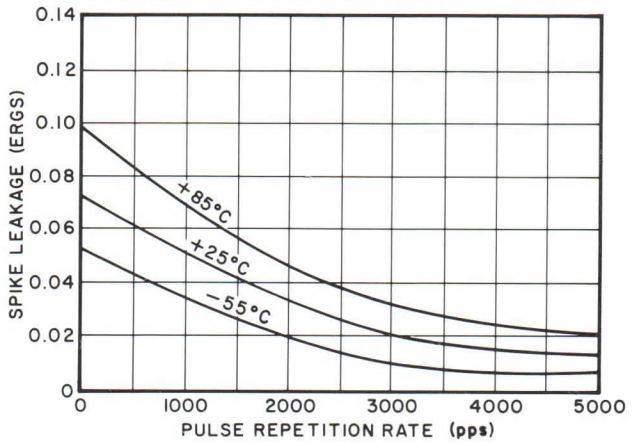

RECOVERY TIME VARIATION WITH TEMPERATURE

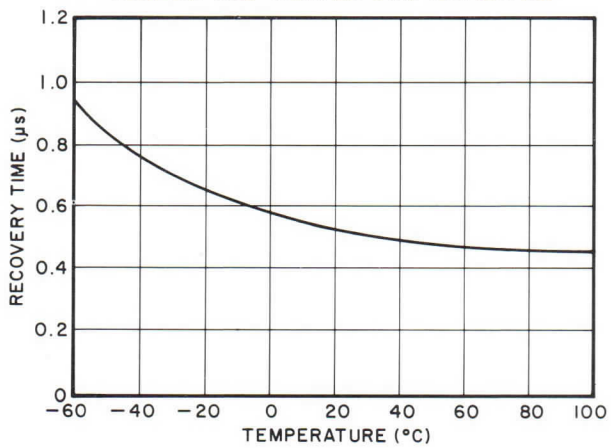

NOISE GENERATED DURING REVERSE BIAS PERIOD

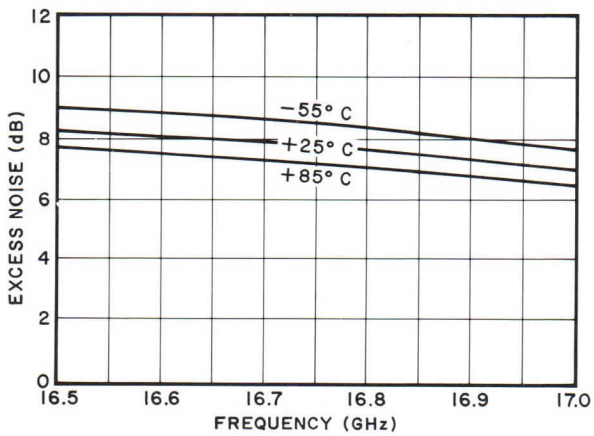

NOISE VARIATION WITH REVERSE CURRENT

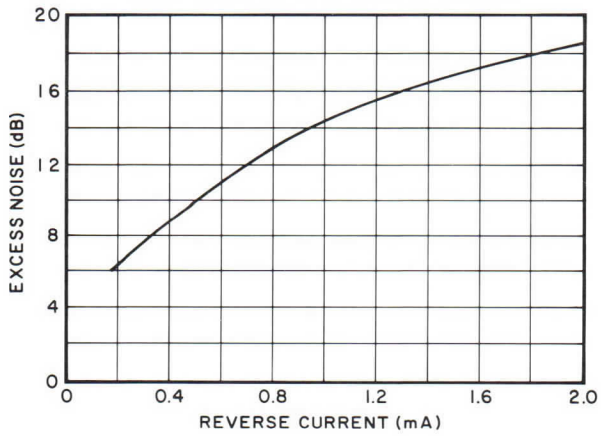

varian
eastern tube division

TECHNICAL DATA

VDC-1027

DURATEMP®
SINGLE PASSIVE
TR LIMITER
5.450-5.825 GHz

DESCRIPTION

The VDC-1027 is a single bandpass DURATEMP Passive TR Limiter (TRL) which operates in the frequency range of 5.450 to 5.825 gigahertz. This C-band receiver protector provides low leakage power and fast recovery time over a wide range of incident power. The TRL employs special high-temperature processing techniques which greatly increase shelf and operating life. It maintains stable operation over a wide temperature range. Operating life expectancy is greater than 2000 hours.

OUTLINE DRAWING

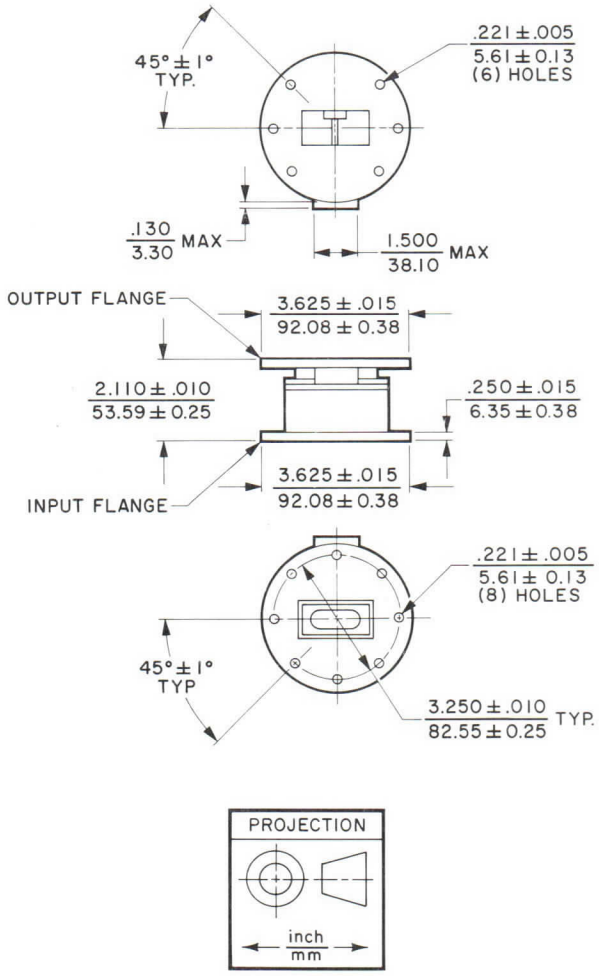

GENERAL CHARACTERISTICS [1]

ELECTRICAL

Frequency Range	5.450-5.825 GHz
Peak Power	50 kW
Duty Cycle	0.0007
Recovery Time	10 μs
Spike Leakage, max	0.1 erg
Flat Leakage, max	70 mW
Insertion Loss	0.8 dB
VSWR	1.4:1

PHYSICAL

Dimensions	See Outline Drawing
Weight, approx	6 oz
Mating Flanges	UG-148/U

ENVIRONMENTAL

Altitude	40,000 ft
Vibration, 50 ± 2 Hz	15 G
Pressurization	30 lbf/in²g
Operating Temperature	-55 to +90 °C

TYPICAL OPERATING CONDITIONS [1]

Frequency Range	5.450-5.825 GHz
Peak Transmitter Power	50 kW
Transmitter Pulse Width	2.1 μs
Pulse Repetition Rate	325 pps
Recovery Time	3 μs
Breakdown Power	100 mW
Spike Leakage	0.05 erg
Flat Leakage	50 mW
Insertion Loss	0.7 dB

3111 10/73

Printed in U.S.A.

CHARACTERISTIC CURVES[1]

Typical performance values

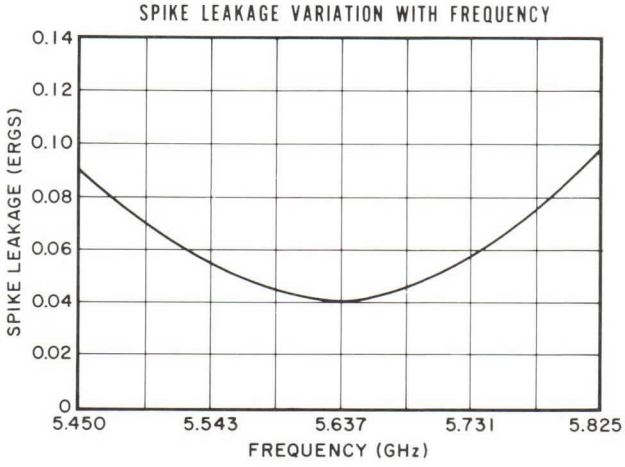

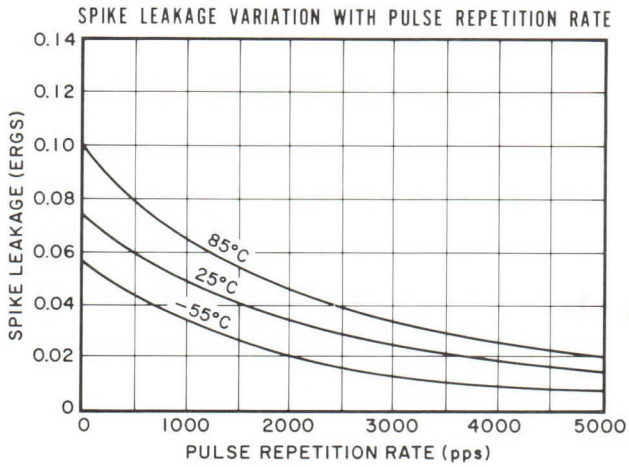

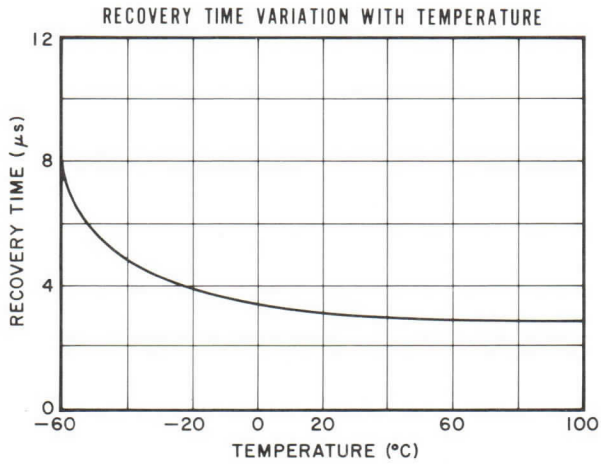

NOTES:

1. Characteristics and operating values are based on performance tests. These figures may change without notice as a result of additional data or product refinement. Consult the Eastern Tube Division before using this information for final equipment design.

varian

PRELIMINARY
TECHNICAL DATA

VDS-1028S

R-F SWITCH

2.9-3.2 GHz

DESCRIPTION

The VDS-1028S is a solid-state, single-pole, double-throw, passive bandpass r-f switch for use as a receiver protector. This S-band device was designed specifically to replace the BLT-119 or BS-110 TR tubes in Selenia 1060, 1401A, 1450, 1650 and 1660 marine radars. Operating life expectancy is greater than 4000 hours.

GENERAL CHARACTERISTICS

ELECTRICAL

Frequency Range	2.9-3.2 GHz
Peak Power, max	60 kW
Duty Cycle	0.005
Recovery Time, 3 dB	1.5 μs
Spike Leakage, max	0.05 erg
Flat Leakage, max	40 mW
Insertion Loss, max	0.6 dB
VSWR	1.4:1

PHYSICAL

Dimensions	See Outline Drawing
Weight, approx	3 lb/1.36 kg
Mating Flanges	Special

ENVIRONMENTAL

Altitude	10,000 ft/3 km
Vibration, 50 Hz ± 2 Hz	15 G
Pressurization	30 lbf/in^2 g(2.1 kgf/cm^2 g)
Operating Temperature	0 to +70 °C

TYPICAL OPERATING CONDITIONS

Frequency Range	2.9 to 3.2 GHz
Peak Transmitter Power	60 kW
Transmitter Pulse Width	0.5 μs
Pulse Repetition Rate	1000 pps
Recovery Time, 3 dB	1.0 μs
Spike Leakage	0.05 erg
Flat Leakage	25 mW
Insertion Loss	0.5 dB

CHARACTERISTIC CURVE

Typical performance values

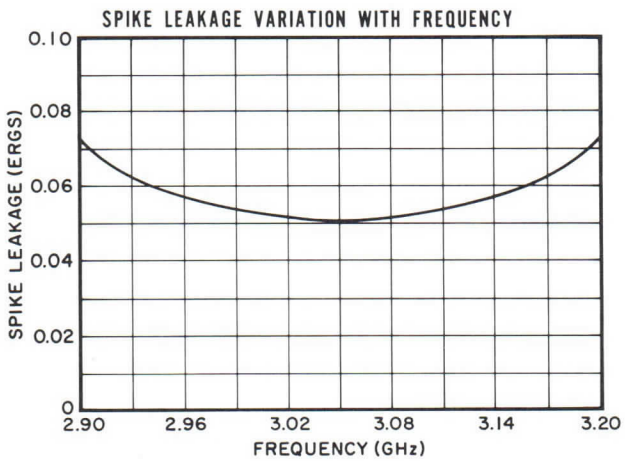

NOTE:

General characteristics, operating conditions, and characteristic curves are based on performance tests. These figures may change without notice as the result of additional performance data or product refinement. Consult Varian before using this information for final equipment design.

3593 8/76

Printed in U.S.A.

OUTLINE DRAWING

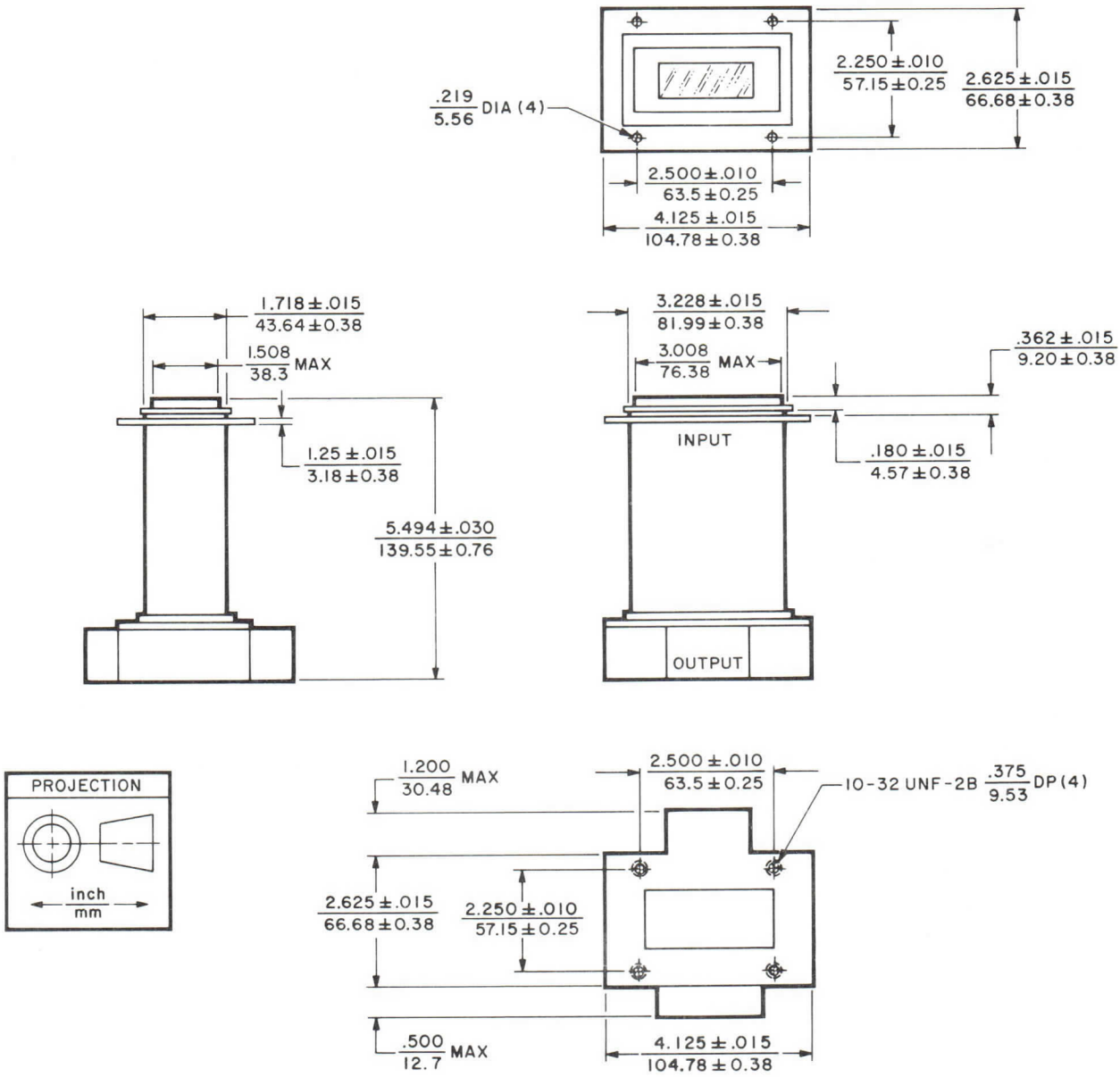

varian
eastern tube division

TECHNICAL DATA

VDC-1029

DURATEMP® SINGLE PASSIVE TR LIMITER

5.395-5.905 GHz

DESCRIPTION

The VDC-1029 is a single bandpass DURATEMP Passive TR Limiter (TRL) which operates in the frequency range of 5.395 to 5.905 gigahertz. This C-band receiver protector provides low leakage power and exceptionally fast recovery time over a wide range of incident power. The TRL employs special high-temperature processing techniques which greatly increase shelf and operating life. It maintains stable operation over a wide temperature range. This TRL was specifically designed to replace the 5865 used in the SPS-10 radar. Operating life expectancy is greater than 4000 hours.

OUTLINE DRAWING

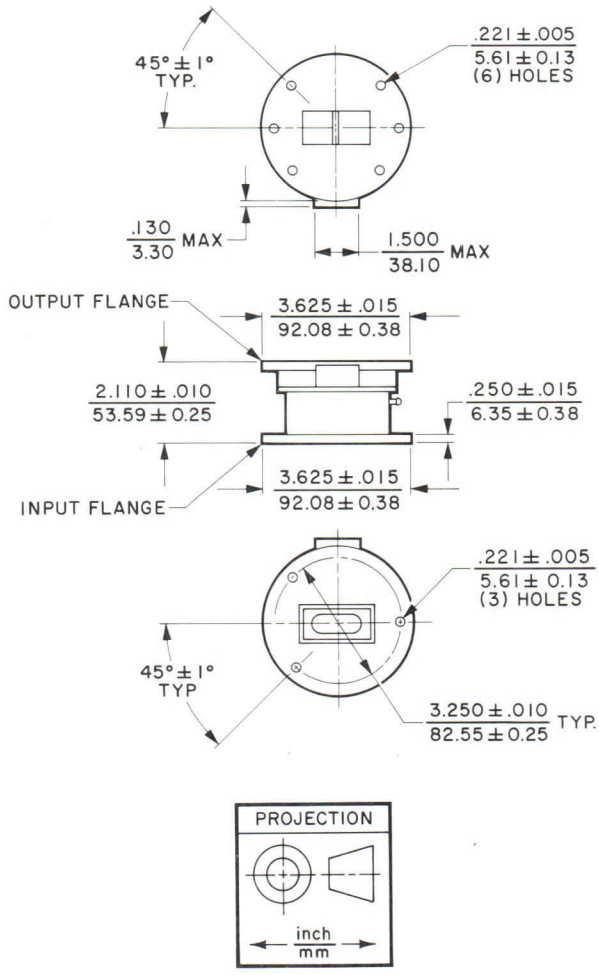

GENERAL CHARACTERISTICS[1]

ELECTRICAL

Frequency Range	5.395-5.905 GHz
Peak Power	300 kW
Duty Cycle	0.001
Recovery Time	5.0 μs
Spike Leakage, max	0.1 erg
Flat Leakage, max	70 mW
Insertion Loss	0.5 dB
VSWR	1.4:1
Position of Short	.085 ± .015 in

PHYSICAL

Dimensions	See Outline Drawing
Weight, approx	5 oz
Mating Flanges	UG-148/U

ENVIRONMENTAL

Altitude	10,000 ft
Vibration, 50 ± 2 Hz	15 G
Pressurization	30 lbf/in^2g
Operating Temperature	-55 to +90 °C

TYPICAL OPERATING CONDITIONS[1]

Frequency Range	5.395-5.905 GHz
Peak Transmitter Power	300 kW
Transmitter Pulse Width	1.0 μs
Pulse Repetition Rate	1000 pps
Recovery Time	3.0 μs
Breakdown Power	80 mW
Spike Leakage	0.05 erg
Flat Leakage	50 mW
Insertion Loss	0.4 dB

3112 10/73

Printed in U.S.A.

CHARACTERISTIC CURVES[1]

Typical performance values

SPIKE LEAKAGE VARIATION WITH FREQUENCY

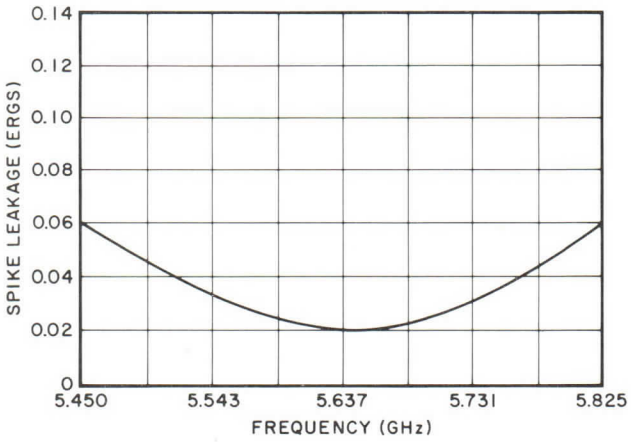

SPIKE LEAKAGE VARIATION WITH PULSE REPETITION RATE

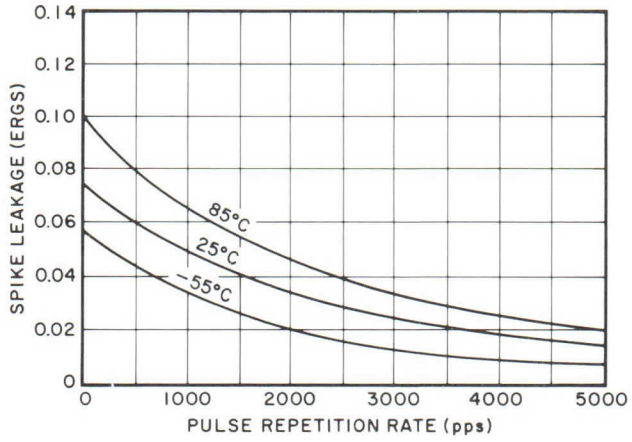

RECOVERY TIME VARIATION WITH TEMPERATURE

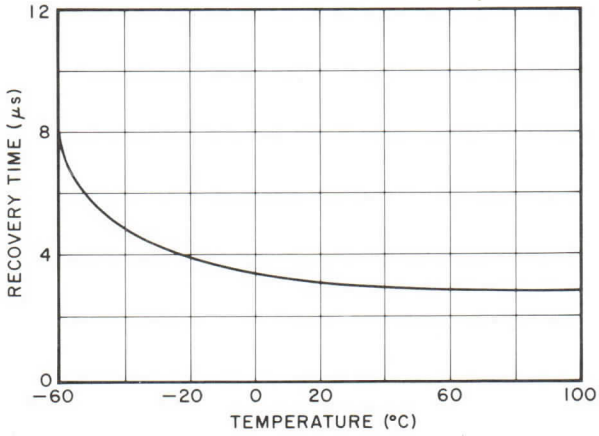

NOTES:

1. Characteristics and operating values are based on performance tests. These figures may change without notice as a result of additional data or product refinement. Consult the Eastern Tube Division before using this information for final equipment design.

varian
eastern tube division

TECHNICAL DATA

VDX-1047

DURATEMP®
SINGLE PASSIVE
TR LIMITER

9.15-9.30 GHz

DESCRIPTION

The VDX-1047 is a single bandpass DURATEMP Passive TR Limiter (TRL) which operates in the frequency range of 9.15 to 9.30 gigahertz. This X-band receiver protector provides low leakage power and excpetionally fast recovery time over a wide range of incident power. The TRL employs special high-temperature processing techniques which greatly increase shelf and operating life. It maintains stable operation over a wide temperature range. Operating life expectancy is greater than 2500 hours.

GENERAL CHARACTERISTICS [1]

ELECTRICAL

Frequency Range	9.15-9.30	GHz
Peak Power, max	50	kW
Duty Cycle, max	0.001	
Recovery Time, max	2.0	μs
Spike Leakage, max	0.06	erg
Flat Leakage, max	50	mW
Insertion Loss, max	0.6	dB
VSWR	1.4:1	

PHYSICAL

Dimensions	See Outline Drawing
Weight, approx	8 oz
Mating Flanges	UG-135/U or equivalent

ENVIRONMENTAL

Altitude	70,000	ft
Vibration, 50 ± 2 Hz	15	G
Pressurization	30	lbf/in²g
Operating Temperature	-55 to +90	°C

TYPICAL OPERATING CONDITIONS [1,2]

Frequency Range	9.15-9.30	GHz
Peak Transmitter Power	20	kW
Transmitter Pulse Width	1	μs
Pulse Repetition Rate	1000	pps
Recovery Time	1	μs
Breakdown Power	75	mW
Spike Leakage	0.03	erg
Flat Leakage	30	mW
Insertion Loss	0.5	dB

OUTLINE DRAWING

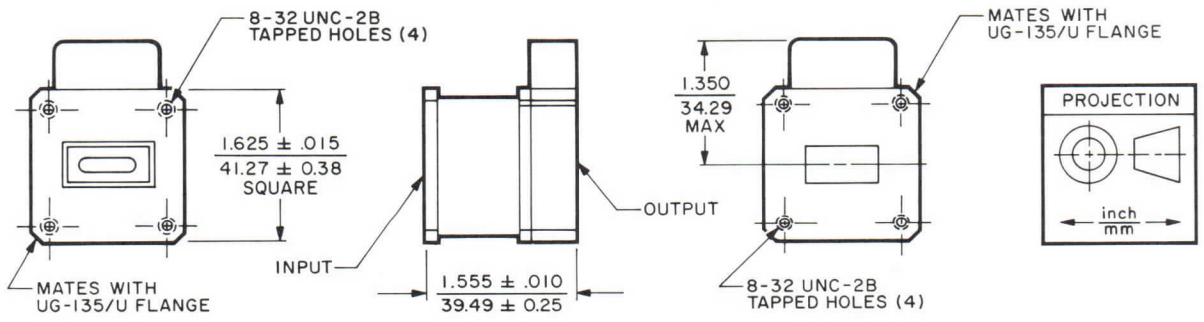

3098 9/73

Printed in U.S.A.

CHARACTERISTIC CURVES [1]

Typical performance values

SPIKE LEAKAGE VARIATION WITH FREQUENCY

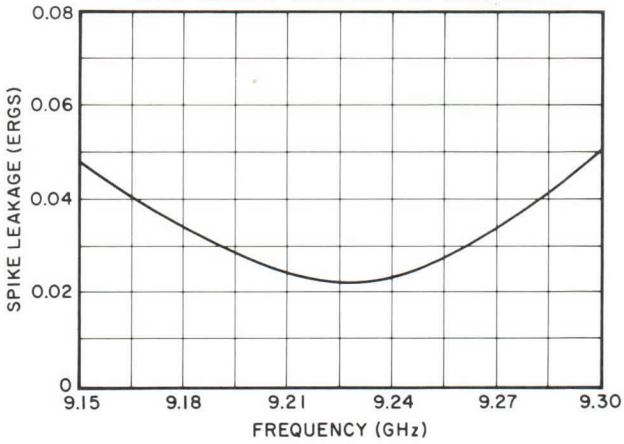

SPIKE LEAKAGE VARIATION WITH PULSE REPETITION RATE

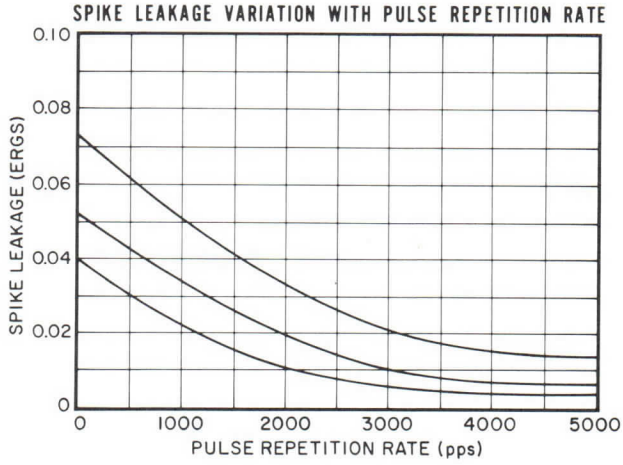

RECOVERY TIME VARIATION WITH TEMPERATURE

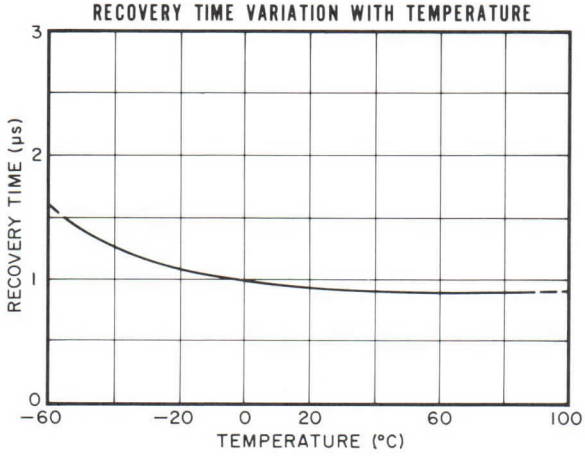

NOTES:

1. General characteristics, operating conditions, and characteristic curves are based on performance tests. These figures may be changed without notice as the result of additional performance data or product refinement. The Varian Eastern Tube Division should be consulted before using this information for final equipment design.

2. Values apply at 25°C and sea level atmospheric pressure.

varian
eastern tube division

TECHNICAL DATA

VDX-1047S

DURATEMP® SINGLE PASSIVE TR LIMITER

9.3-9.5 GHz

DESCRIPTION

The VDX-1047S is a single bandpass DURATEMP Passive TR Limiter (TRL) which operates in the frequency range of 9.3 to 9.5 gigahertz. This X-band receiver protector provides low leakage power and exceptionally fast recovery time over a wide range of incident power. The VDX-1047S was designed especially for operation in boat radars and is intended to replace the 1B63A, 1B63B, BL-95/6644, and BTR-629. The TRL employs special high-temperature processing techniques which greatly increase shelf and operating life. It maintains stable operation over a wide temperature range. Operating life expectancy is greater than 2000 hours.

GENERAL CHARACTERISTICS [1]

ELECTRICAL

Frequency Range	9.3-9.5 GHz
Peak Power, max	50 kW
Duty Cycle, max	0.001
Recovery Time, max	5 μs
Spike Leakage, max	0.1 erg
Flat Leakage, max	25 mW
Insertion Loss, max	1.0 dB
VSWR	1.4:1

PHYSICAL

Dimensions	See Outline Drawing
Weight, approx	8 oz
Mating Flanges	UG-135/U or equivalent

ENVIRONMENTAL

Altitude	70,000 ft
Vibration, 50 ± 2 Hz	15 G
Pressurization	30 lbf/in²g
Operating Temperature	-55 to +90 °C

TYPICAL OPERATING CONDITIONS [1,2]

Frequency Range	9.3-9.5 GHz
Peak Transmitter Power	20 kW
Transmitter Pulse Width	1.2 μs
Pulse Repetition Rate	500 pps
Recovery Time	2 μs
Breakdown Power	75 mW
Spike Leakage	0.05 erg
Flat Leakage	20 mW
Insertion Loss	0.7 dB

OUTLINE DRAWING

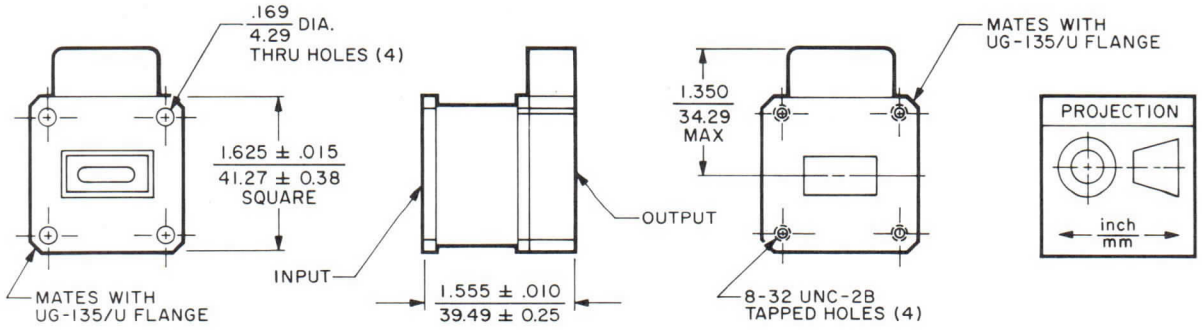

3099 9/73

Printed in U.S.A.

CHARACTERISTIC CURVES [1]

Typical performance values

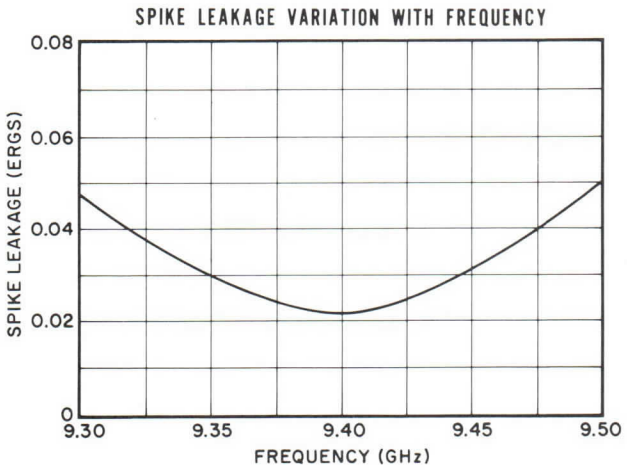

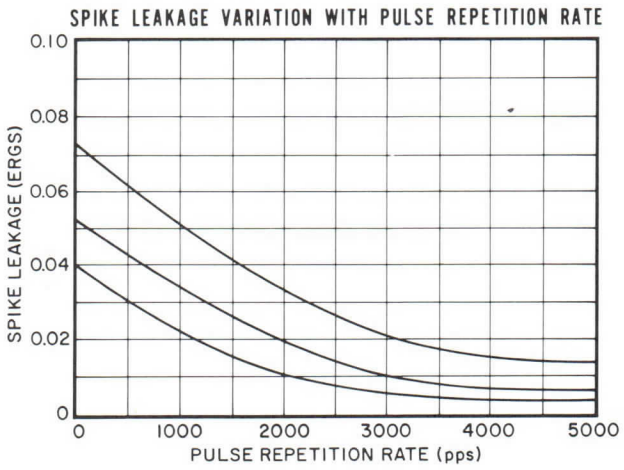

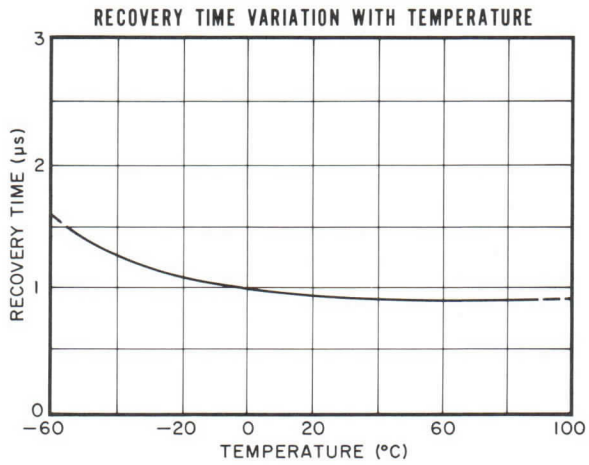

NOTES:

1. General characteristics, operating conditions, and characteristic curves are based on performance tests. These figures may be changed without notice as the result of additional performance data or product refinement. The Varian Eastern Tube Division should be consulted before using this information for final equipment design.

2. Values apply at 25°C and sea level atmospheric pressure.

varian

TECHNICAL DATA

VDX-1055

DURATEMP SINGLE PASSIVE TR LIMITER

9.325-9.425 GHz

DESCRIPTION

The VDX-1055 is a single bandpass DURATEMP Passive TR Limiter (TRL) which operates in the frequency range of 9.325 to 9.425 gigahertz. This X-band receiver protector provides low leakage power and exceptionally fast recovery time over a wide range of incident power. The VDX-1055 was designed especially for operation in AVQ-56 weather radars. The TRL employs special high-temperature processing techniques which greatly increase shelf and operating life. It maintains stable operation over a wide temperature range. Operating life expectancy is greater than 2500 hours.

GENERAL CHARACTERISTICS[1]

ELECTRICAL[2]

Frequency Range	9.325-9.425 GHz
Peak Power	10 kW
Duty Cycle	0.001
Recovery Time	1.0 μs
Spike Leakage, max	0.05 erg
Flat Leakage, max	50 mW
Insertion Loss	0.8 dB
VSWR	1.4:1

PHYSICAL

Dimensions	See Outline Drawing
Weight, approx	8 oz/227 g
Mating Flanges	UG-135/U or equivalent

ENVIRONMENTAL

Altitude	70,000 ft/21 km
Vibration, 50 ± 2 Hz	15 G
Pressurization	30 lbf/in² g

TYPICAL OPERATING CONDITIONS[1]

Frequency Range	9.325-9.425 GHz
Peak Transmitter Power	10 kW
Transmitter Pulse Width	2.25 μs
Pulse Repetition Rate	350 pps
Recovery Time	0.7 μs
Breakdown Power	75 mW
Spike Leakage	0.03 erg
Flat Leakage	30 mW
Insertion Loss	0.7 dB

OUTLINE DRAWING

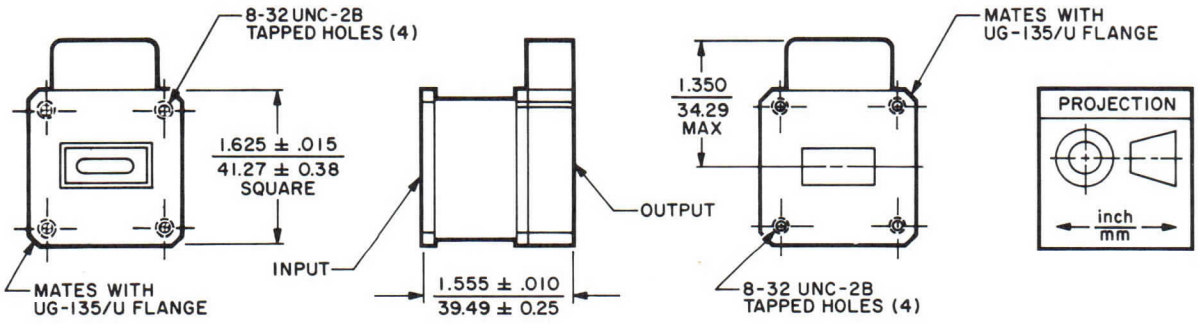

3488 1/76

Printed in U.S.A.

CHARACTERISTIC CURVES[1]

Typical performance values

SPIKE LEAKAGE VARIATION WITH FREQUENCY

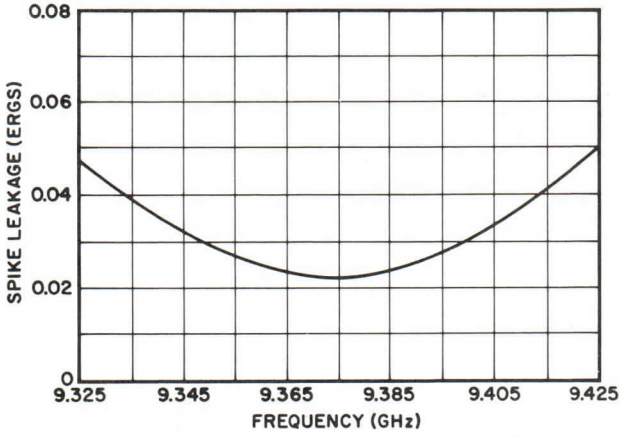

RECOVERY TIME VARIATION WITH TEMPERATURE

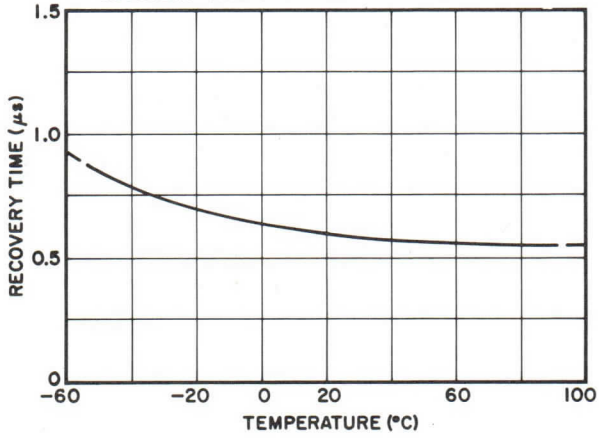

SPIKE LEAKAGE VARIATION WITH PULSE REPETITION RATE

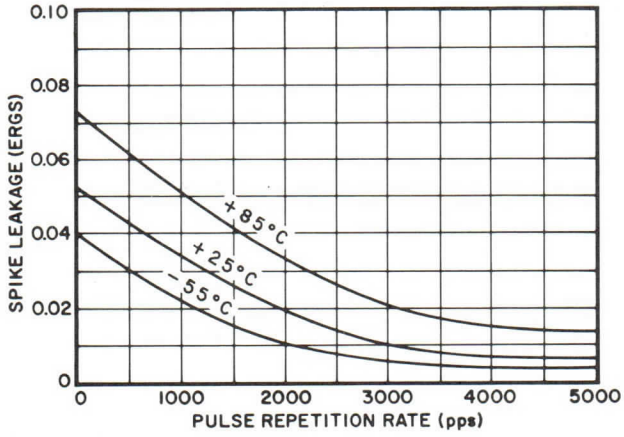

NOTES:

1. General characteristics, operating conditions and characteristic curves are based on performance tests. These figures may change without notice as the result of additional performance data or product refinement. Varian Beverly should be consulted before using this information for final equipment design.
2. Values apply at 25°C and sea level atmospheric pressure.

varian beverly

TECHNICAL DATA

VDX-1057

DURATEMP SINGLE PASSIVE TR LIMITER WITH FAULT MONITOR 9.325-9.425 GHz

DESCRIPTION

The VDX-1057 is a single bandpass DURATEMP Passive TR Limiter (TRL) which operates in the frequency range of 9.325 to 9.425 gigahertz. This X-band receiver protector provides low leakage power and exceptionally fast recovery time over a wide range of incident power. The VDX-1057 was designed especially for operation in RDR-1F weather radars. It incorporates a monitor circuit to detect its deterioration and a test terminal for checking the monitor circuit independently from the TRL. The TRL employs special high-temperature processing techniques which greatly increase shelf and operating life. It maintains stable operation over a wide temperature range. Operating life expectancy is greater than 2500 hours.

GENERAL CHARACTERISTICS[1]

ELECTRICAL[2]

Frequency Range	9.325-9.425 GHz
Peak Power	100 kW
Duty Cycle	0.001
Recovery Time	1.5 μs
Spike Leakage, max	0.03 erg
Flat Leakage, max	50 mW
Insertion Loss	0.8 dB
VSWR	1.4:1

PHYSICAL

Dimensions	See Outline Drawing
Weight, approx	8 oz/226 g
Mating Flanges	See Outline Drawing

ENVIRONMENTAL

Altitude	70,000 ft
Vibration, 50 ± 2 Hz	15 G
Pressurization	30 lbf/in²g
Operating Temperature	-55 to +90 °C

TYPICAL OPERATING CONDITIONS[1,2]

Frequency Range	9.325-9.425 GHz
Peak Transmitter Power	10 kW
Transmitter Pulse Width	1 μs
Pulse Repetition Rate	1000 pps
Recovery Time	0.8 μs
Breakdown Power	25 mW
Spike Leakage	0.008 erg
Flat Leakage	30 mW
Insertion Loss	0.7 dB

OUTLINE DRAWING

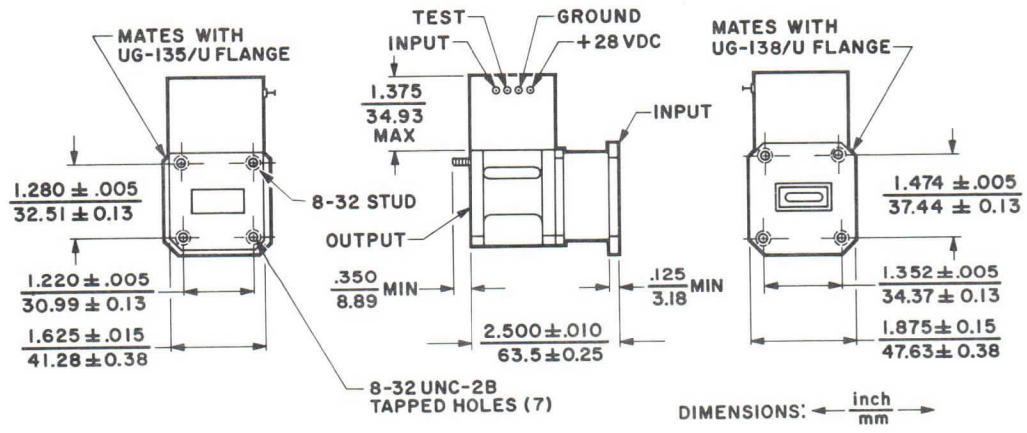

3387 5/75

Printed in U.S.A.

CHARACTERISTIC CURVES [1]

Typical performance values

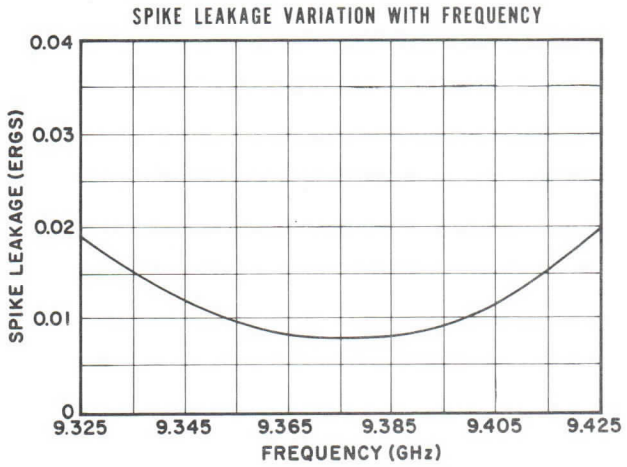

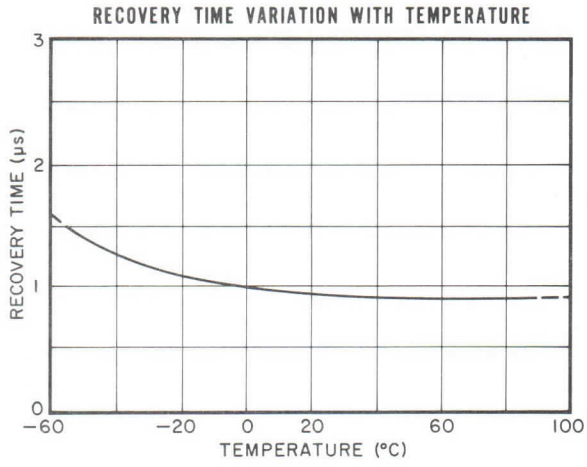

NOTES:

1. General characteristics, operating conditions, and characteristic curves are based on performance tests. These figures may be changed without notice as the result of additional performance data or product refinement. Varian Beverly should be consulted before using this information for final equipment design.

2. Values apply at 25°C and sea level atmospheric pressure.

varian
eastern tube division

TECHNICAL DATA

VDX-1071

DURATEMP®
SINGLE PASSIVE
TR LIMITER
9.325-9.575 GHz

DESCRIPTION

The VDX-1071 is a single bandpass DURATEMP Passive TR Limiter (TRL) which operates in the frequency range of 9.325 to 9.575 gigahertz. This X-band receiver protector provides low leakage power and exceptionally fast recovery time over a wide range of incident power. The VDX-1071 was designed especially for operation in RDR-1E weather radars. The TRL employs special high-temperature processing techniques which greatly increase shelf and operating life. It maintains stable operation over a wide temperature range. Operating life expectancy is greater than 2500 hours.

GENERAL CHARACTERISTICS[1]

ELECTRICAL[2]

Frequency Range	9.325-9.575 GHz
Peak Power	10 kW
Duty Cycle	0.001
Recovery Time	<1.5 μs
Spike Leakage, max	0.05 erg
Flat Leakage, max	50 mW
Insertion Loss	0.8 dB
VSWR	1.4:1

PHYSICAL

Dimensions	See Outline Drawing
Weight, approx	8 oz
Mating Flanges	UG-135/U or equivalent

ENVIRONMENTAL

Altitude	70,000 ft
Vibration, 50 ± 2 Hz	15 G
Pressurization	30 lbf/in²g
Operating Temperature	-55 to +90 °C

TYPICAL OPERATING CONDITIONS[1,2]

Frequency Range	9.325-9.575 GHz
Peak Transmitter Power	10 kW
Transmitter Pulse Width	1 μs
Pulse Repetition Rate	1000 pps
Recovery Time	1 μs
Breakdown Power	100 mW
Spike Leakage	0.03 erg
Flat Leakage	30 mW
Insertion Loss	0.7 dB

OUTLINE DRAWING

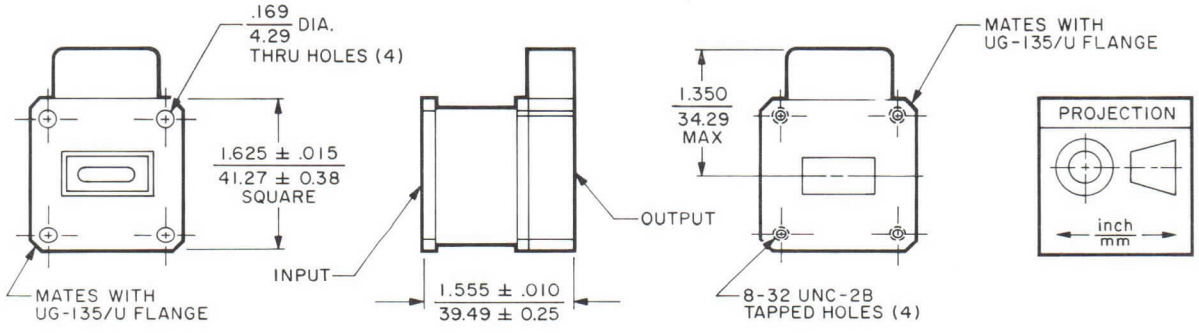

3038 6/73

Printed in U.S.A.

CHARACTERISTIC CURVES[1]

Typical performance values

SPIKE LEAKAGE VARIATION WITH FREQUENCY

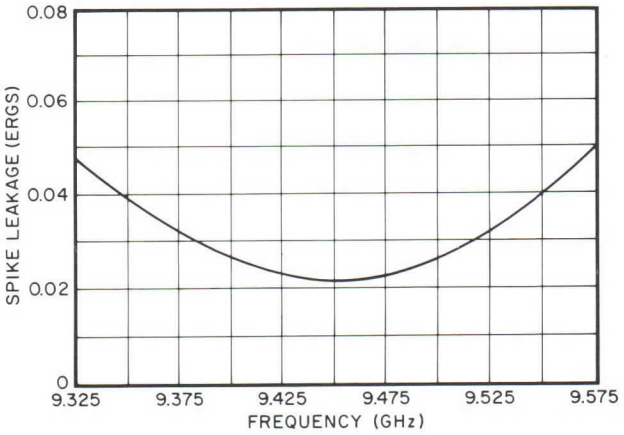

RECOVERY TIME VARIATION WITH TEMPERATURE

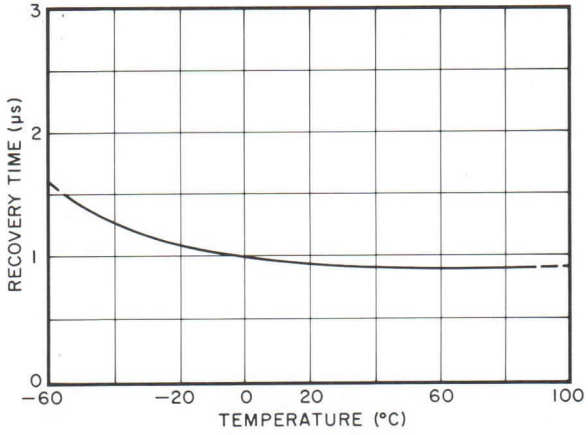

SPIKE LEAKAGE VARIATION WITH PULSE REPETITION RATE

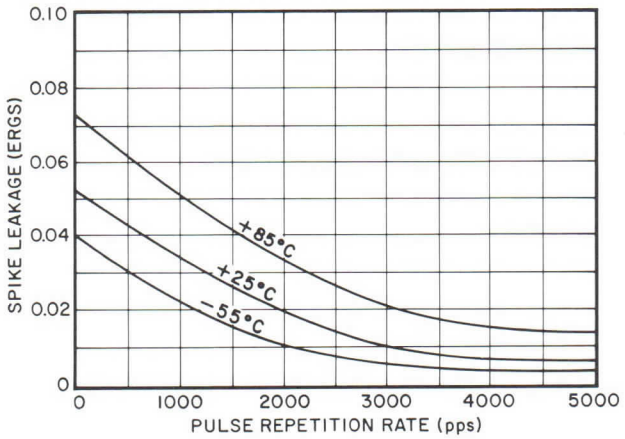

NOTES:

1. General characteristics, operating conditions, and characteristic curves are based on performance tests. These figures may be changed without notice as the result of additional performance data or product refinement. The Varian Eastern Tube Division should be consulted before using this information for final equipment design.

2. Values apply at 25°C and sea level atmospheric pressure.

varian beverly

TECHNICAL DATA

VDX-1080

RF SWITCH

9.3-9.5 GHz
5 kW

DESCRIPTION

The VDX-1080 is a solid-state, single-pole, double-throw, passive, bandpass r-f switch used as a receiver protector. It operates over the frequency range of 9.3 to 9.5 gigahertz. This X-band receiver protector provides low leakage power and fast recovery time over a wide range of incident power. The VDX-1080 was designed especially for operation in boat radars and is intended to replace the 1B63A, 1B63B, BL-95/6644, and BTR-629. Operating life expectancy is greater than 2000 hours.

GENERAL CHARACTERISTICS [1]

ELECTRICAL

Frequency Range	9.3-9.5	GHz
Peak Power, max	5	kW
Duty Cycle, max	0.001	
Recovery Time, max	1.5	μs
Spike Leakage, max	0.05	erg
Flat Leakage, max	50	mW
Insertion Loss, max	0.85	dB
VSWR	1.3:1	

PHYSICAL

Dimensions	See Outline Drawing
Weight, approximate	6/170 oz/g
Mating Flanges	UG-135/U or equivalent

ENVIRONMENTAL

Altitude	50,000 ft
Vibration, 50 ± 2 Hz	15 G
Operating Temperature	-10 to +60 °C

TYPICAL OPERATING CONDITIONS [1,2]

Frequency Range	9.3-9.5	GHz
Peak Transmitter Power	3	kW
Transmitter Pulse Width	0.6	μs
Pulse Repetition Rate	1000	pps
Recovery Time	1	μs
Breakdown Power	100	mW
Spike Leakage	0.03	erg
Flat Leakage	40	mW
Insertion Loss	0.75	dB

OUTLINE DRAWING

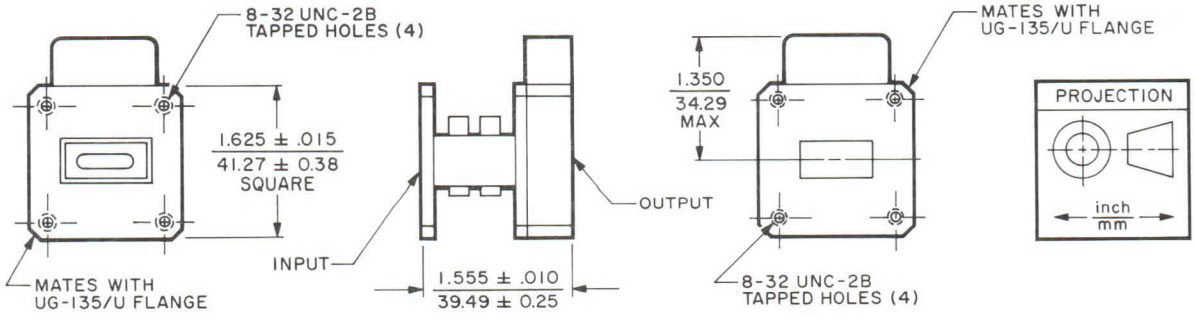

3257 7/74

Printed in U.S.A.

CHARACTERISTIC CURVES [1]

Typical performance values

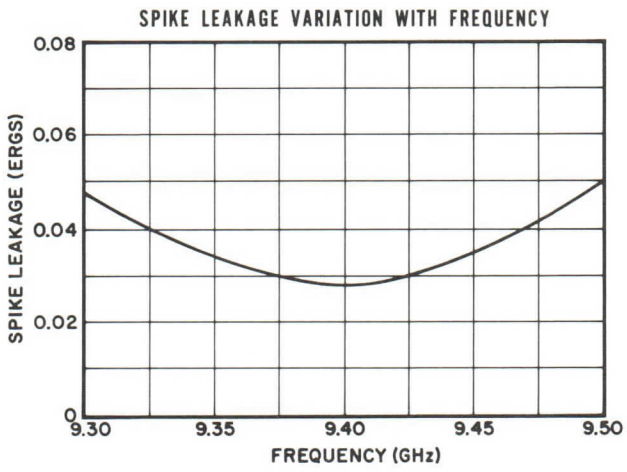

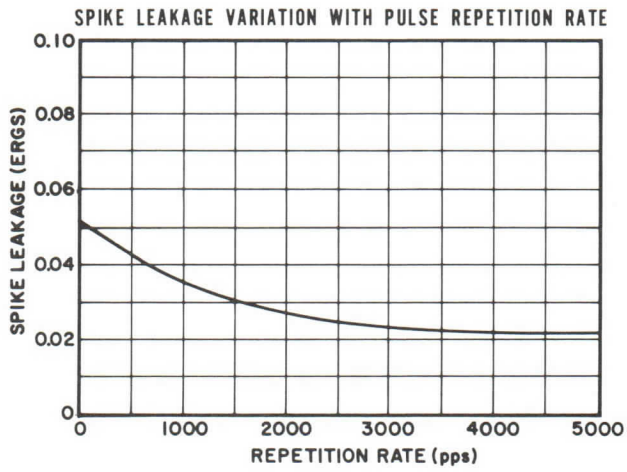

NOTES:

1. General characteristics, operating conditions, and characteristic curves are based on performance tests. These figures may be changed without notice as the result of additional performance data or product refinement. Varian Beverly should be consulted before using this information for final equipment design.

2. Values apply at 25°C and sea level atmospheric pressure.

varian beverly

TECHNICAL DATA

VDX-1099

DURATEMP®
SINGLE PASSIVE
TR LIMITER
9.275-9.475 GHz

DESCRIPTION

The VDX-1099 is a single bandpass DURATEMP Passive TR Limiter (TRL) which operates in the frequency range of 9.275 to 9.475 gigahertz. This X-band receiver protector provides low leakage power and exceptionally fast recovery time over a wide range of incident power.

The TRL employs special high-temperature processing techniques which greatly increases shelf and operating life. It maintains stable operation over a wide temperature range. Operating life expectancy is greater than 2500 hours.

GENERAL CHARACTERISTICS[1]

ELECTRICAL[2]

Frequency Range	9.275-9.475 GHz
Peak Power	50 kW
Duty Cycle	0.001
Recovery Time, max	1.0 μs
Spike Leakage, max	0.05 erg
Flat Leakage, max	50 mW
Insertion Loss	0.8 dB
VSWR	1.4:1

PHYSICAL

Dimensions	See Outline Drawing
Weight, approx	8 oz/227 g
Mating Flanges	UG-135/U or equivalent

ENVIRONMENTAL

Altitude	70,000 ft
Vibration, 50 ± 2 Hz	15 G
Pressurization	30 lbf/in² g
Operating Temperature	-55 to +90 °C

TYPICAL OPERATING CONDITIONS[1,2]

Frequency Range	9.275-9.475 GHz
Peak Transmitter Power	50 kW
Transmitter Pulse Width	1 μs
Pulse Repetition Rate	1000 pps
Recovery Time	0.6 μs
Breakdown Power	100 mW
Spike Leakage	0.03 erg
Flat Leakage	30 mW
Insertion Loss	0.7 dB

OUTLINE DRAWING

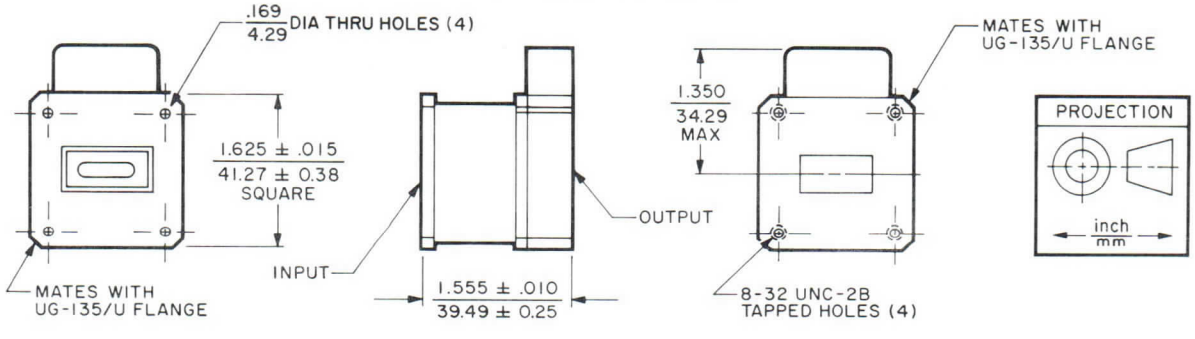

3472 12/75

Printed in U.S.A.

CHARACTERISTIC CURVES [1]

Typical performance values

SPIKE LEAKAGE VARIATION WITH FREQUENCY

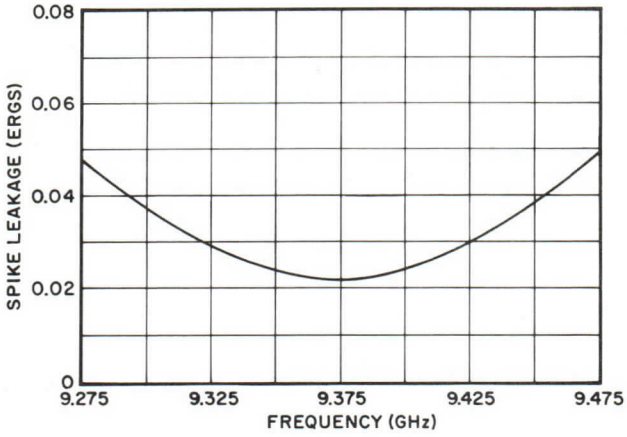

RECOVERY TIME VARIATION WITH TEMPERATURE

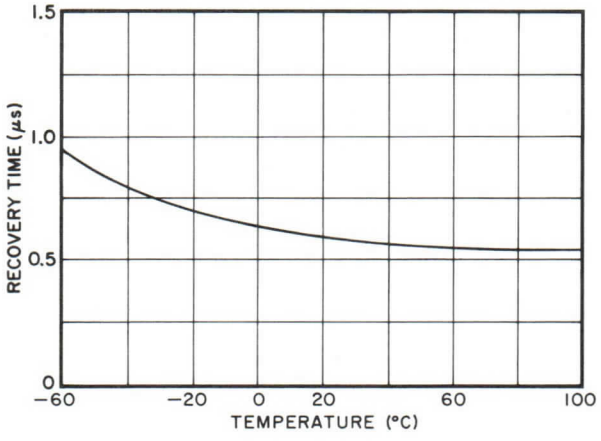

SPIKE LEAKAGE VARIATION WITH PULSE REPETITION RATE

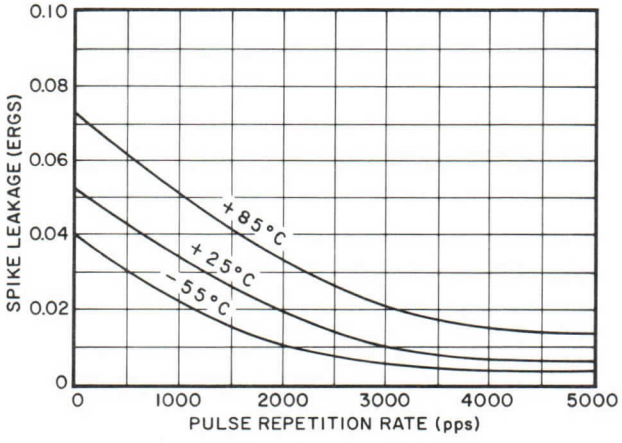

NOTES:

1. General characteristics, operating conditions, and characteristic curves are based on performance tests. These figures may change without notice as the result of additional performance data or product refinement. Varian Beverly should be consulted before using this information for final equipment design.

2. Values apply at 25°C and sea level atmospheric pressure.

varian beverly

TECHNICAL DATA

VDX-1119

DURATEMP ® SINGLE PASSIVE TR LIMITER

9.245-9.445 GHz

DESCRIPTION

The VDX-1119 is a single bandpass DURATEMP Passive TR Limiter (TRL) which operates in the frequency range of 9.245 to 9.445 gigahertz. This X-band receiver protector provides low leakage power and exceptionally fast recovery time over a wide range of incident power. The VDX-1119 was designed especially for operation in weather radar systems and incorporates Sensitivity Time Control (STC) of at least 20 dB. The TRL employs special high-temperature processing techniques which greatly increase shelf and operating life. It maintains stable operation over a wide temperature range. Operating life expectancy is greater than 2500 hours.

GENERAL CHARACTERISTICS [1]

ELECTRICAL [2]

Frequency Range	9.245-9.445 GHz
Peak Power	10 kW
Duty Cycle	0.001
Recovery Time	5 μs
Spike Leakage, max	0.05 erg
Flat Leakage, max	50 mW
Insertion Loss	0.8 dB
VSWR	1.4:1
Sensitivity Time Control, min	20 dB

PHYSICAL

Dimensions	See Outline Drawing
Weight, approx	8 oz/227 g
Mating Flanges	UG-135/U or equivalent

ENVIRONMENTAL

Altitude	70,000 ft
Vibration, 50 ± 2 Hz	15 G
Pressurization	30 lbf/in^{2}g
Operating Temperature	-55 to +90 °C

TYPICAL OPERATING CONDITIONS [1,2]

Frequency Range	9.245-9.445 GHz
Peak Transmitter Power	10 kW
Transmitter Pulse Width	5.5 μs
Pulse Repetition Rate	1100 pps
Recovery Time	3 μs
Breakdown Power	50 mW
Spike Leakage	0.03 erg
Flat Leakage	30 mW
Insertion Loss	0.7 dB
Spike Leakage Amplitude	2 W

OUTLINE DRAWING

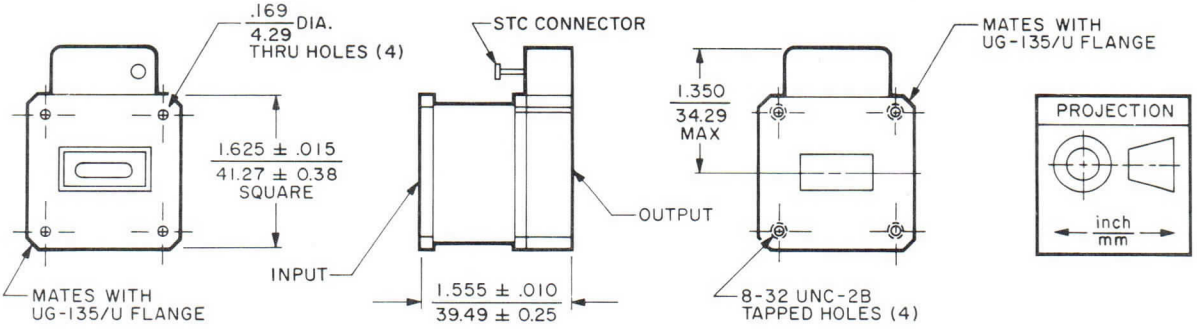

3473 12/75

Printed in U.S.A.

CHARACTERISTIC CURVES[1]

Typical performance values

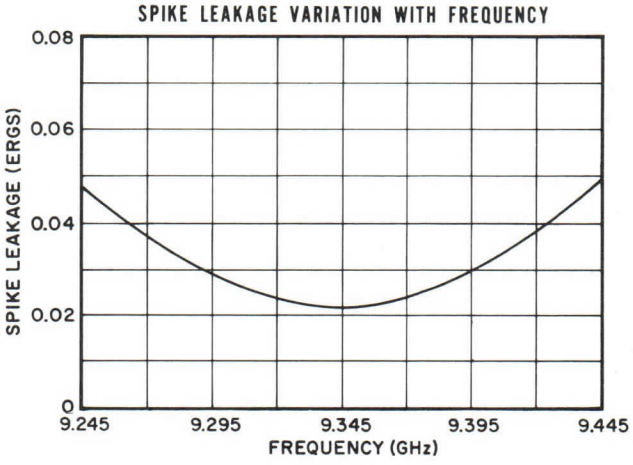

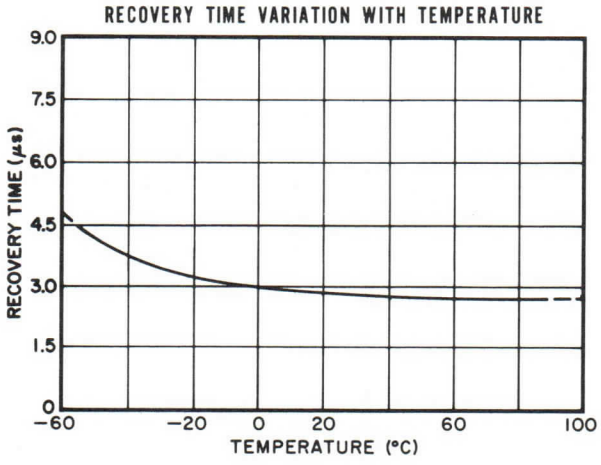

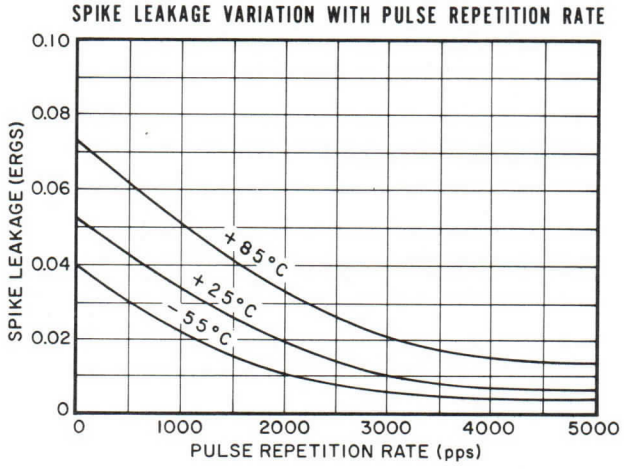

NOTES:

1. General characteristics, operating conditions, and characteristic curves are based on performance tests. These figures may change without notice as the result of additional performance data or product refinement. Varian Beverly should be consulted before using this information for final equipment design.

2. Values apply at 25°C and sea level atmospheric pressure.

varian

TECHNICAL DATA

VDX-1134

SINGLE TR LIMITER

9.3-9.5 GHz

DESCRIPTION

The VDX-1134 is a single bandpass active TR Limiter (TRL) which operates in the frequency range of 9.3 to 9.5 gigahertz. This X-band receiver protector provides low leakage power and fast recovery time over a wide range of incident power. The VDX-1134 was designed especially for operation in JRC models JMA 148, 149, 153, 157, 158, 159, and 170 marine radars. Operating life expectancy is greater than 1500 hours.

GENERAL CHARACTERISTICS [1]

ELECTRICAL [2]

Frequency Range	9.3-9.5	GHz
Peak Power	50	kW
Duty Cycle	0.001	
Recovery Time	3.0	μs
Spike Leakage, max	0.1	erg
Flat Leakage, max	65	mW
Insertion Loss	0.7	dB
Ignitor Open Circuit Voltage, min	-700	Vdc
Ignitor Voltage Drop	175-375	Vdc
VSWR	1.3:1	
Position of Short [3]	0.058-0.072 in/1.47-1.83	mm

PHYSICAL

Dimensions	See Outline Drawing
Weight, approx	8 oz/227 g
Mating Flanges	UG-135/U or equivalent

ENVIRONMENTAL

Altitude	10,000 ft/3 km
Vibration, 50 ± 2 Hz	15 G
Pressurization	30 lbf/in² g
Operating Temperature	-10 to +70 °C

TYPICAL OPERATING CONDITIONS [1]

Frequency Range	9.3-9.5	GHz
Peak Transmitter Power	50	kW
Transmitter Pulse Width	1	μs
Pulse Repetition Rate	1000	pps
Recovery Time	2.0	μs
Spike Leakage	0.05	erg
Flat Leakage	45	mW
Insertion Loss	0.65	dB
Ignitor Current [4]	150	μAdc
Ignitor Voltage Drop	235	Vdc

OUTLINE DRAWING

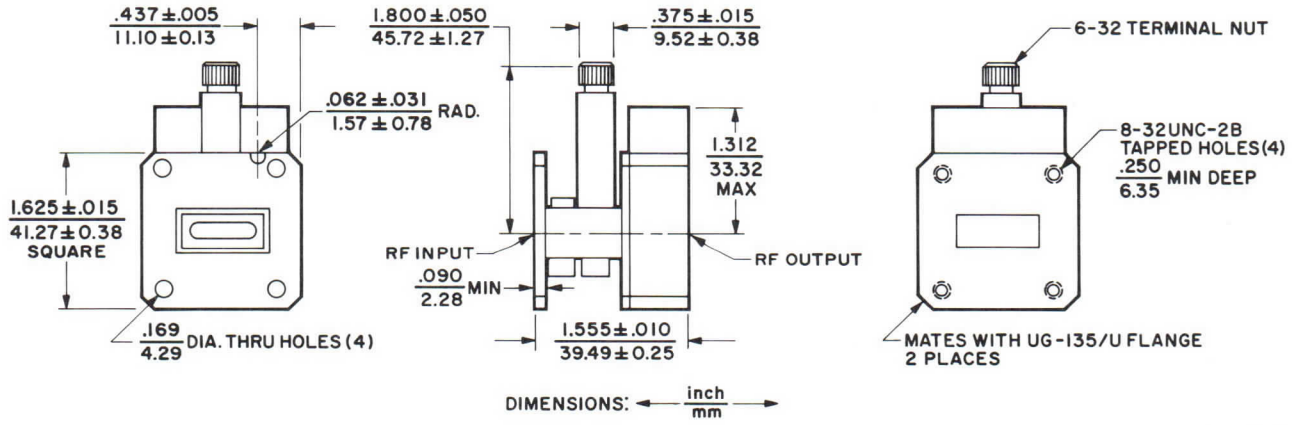

3489 1/76

Printed in U.S.A.

CHARACTERISTIC CURVES [1]

Typical performance values

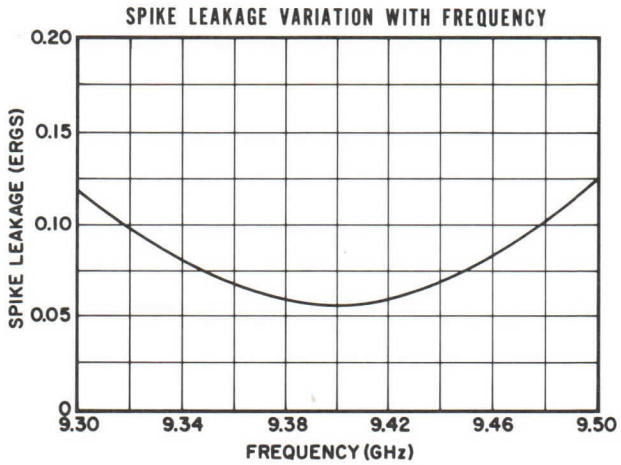

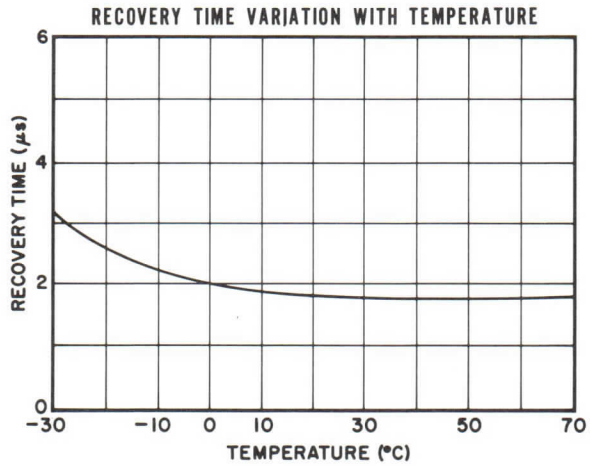

NOTES:

1. General characteristics, operating conditions, and characteristic curves are based on performance tests. These figures may change without notice as the result of additional performance data or product refinement. Varian/Beverly should be consulted before using this information for final equipment design.

2. Values apply at 25° C and sea level atmospheric pressure.

3. Distance of the effective rf short circuit behind face of input flange.

4. To calculate the value of ignitor series resistance required, use the following formula:

$$R_i = \frac{Ebb-Eid}{I_i}$$

where

R_i = Total ignitor-circuit series resistance in megohms
Ebb = Ignitor open-circuit supply voltage in volts
Eid = Ignitor voltage drop in volts
I_i = Ignitor current in microamperes

Example: $R_i = \frac{650-225}{150} = 2.833$ megohms

(To prevent oscillation, at least 0.5 megohm of the total series resistance should be close to the ignitor cap.)

varian

TECHNICAL DATA

VDX-1135

SINGLE TR LIMITER

9.3-9.5 GHz

DESCRIPTION

The VDX-1135 is a single bandpass active TR Limiter (TRL) which operates in the frequency range of 9.3 to 9.5 gigahertz. This X-band receiver protector provides low leakage power and fast recovery time over a wide range of incident power. The VDX-1135 was designed especially for operation in Marconi Predictor and Radio Locator 12 and 16 marine radars. Operating life expectancy is greater than 1500 hours.

GENERAL CHARACTERISTICS [1]

ELECTRICAL [2]

Frequency Range	9.3-9.5	GHz
Peak Power	25	kW
Duty Cycle	0.001	
Recovery Time	3.0	μs
Spike Leakage, max	0.1	erg
Flat Leakage, max	60	mW
Insertion Loss	0.8	dB
Ignitor Open Circuit Voltage, min	-700	Vdc
Ignitor Voltage Drop	175-375	Vdc
VSWR	1.3:1	
Position of Short [3]	0.011-0.031 in/0.28-0.79	mm

PHYSICAL

Dimensions	See Outline Drawing
Weight, approx	8 oz/227 g
Mating Flanges	UG-135/U or equivalent

ENVIRONMENTAL

Altitude	10,000 ft/3 km
Vibration, 50 ± 2 Hz	15 G
Pressurization	30 lbf/in^2 g
Operating Temperature	-30 to +70 °C

TYPICAL OPERATING CONDITIONS [1]

Frequency Range	9.3-9.5	GHz
Peak Transmitter Power	25	kW
Transmitter Pulse Width	1	μs
Pulse Repetition Rate	1000	pps
Recovery Time	2.0	μs
Spike Leakage	0.08	erg
Flat Leakage	50	mW
Insertion Loss	0.7	dB
Ignitor Current [4]	150	μAdc
Ignitor Voltage Drop	235	Vdc

OUTLINE DRAWING

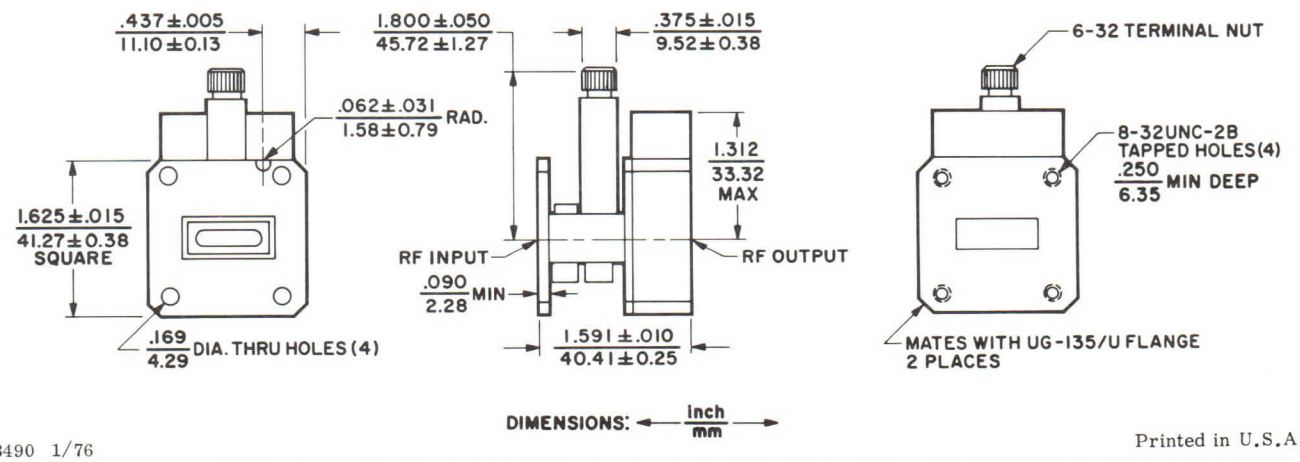

3490 1/76

Printed in U.S.A.

CHARACTERISTIC CURVES [1]

Typical performance values

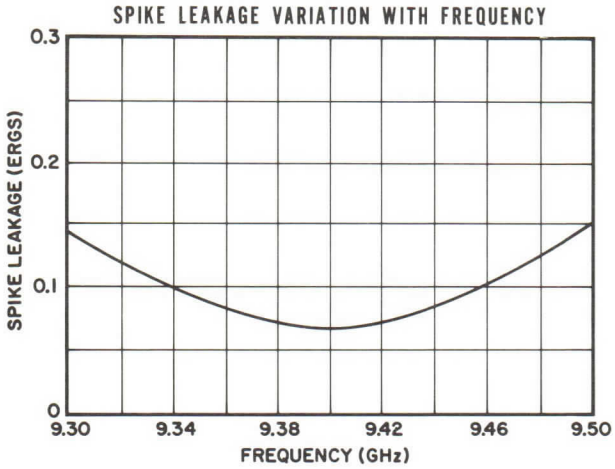

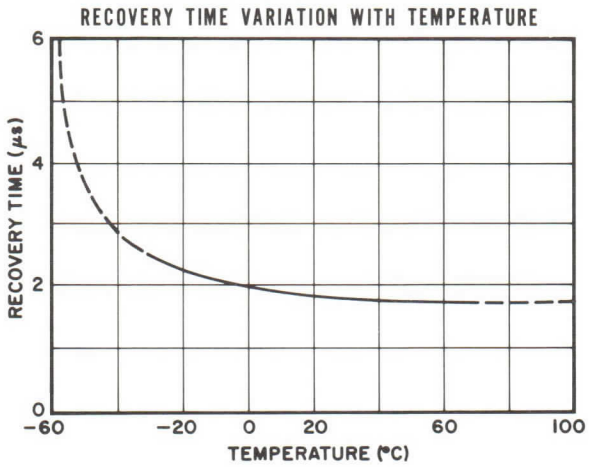

NOTES:

1. General characteristics, operating conditions, and characteristic curves are based on performance tests. These figures may change without notice as the result of additional performance data or product refinement. Varian/Beverly should be consulted before using this information for final equipment design.

2. Values apply at 25° C and sea level atmospheric pressure.

3. Distance of the effective rf short circuit behind face of input flange.

4. To calculate the value of ignitor series resistance required, use the following formula:

$$R_i = \frac{Ebb-Eid}{I_i}$$

where

R_i = Total ignitor-circuit series resistance in megohms
Ebb = Ignitor open-circuit supply voltage in volts
Eid = Ignitor voltage drop in volts
I_i = Ignitor current in microamperes

Example: $R_i = \frac{650-225}{150} = 2.833$ megohms

(To prevent oscillation, at least 0.5 megohm of the total series resistance should be close to the ignitor cap.)

varian

TECHNICAL DATA

VDX-1136

DURATEMP ®
SINGLE PASSIVE
TR LIMITER
9.3-9.5 GHz

DESCRIPTION

The VDX-1136 is a single bandpass DURATEMP Passive TR Limiter (TRL) which operates in the frequency range of 9.3 to 9.5 gigahertz. This X-band receiver protector provides low leakage power and fast recovery time over a wide range of incident power. The VDX-1136 was designed especially for direct replacement of the VDX-1134 used in JRC models 148, 149, 153, 157, 158, 159, and 170 marine radars. The TRL employs special high-temperature processing techniques which greatly increase shelf and operating life. It maintains stable operation over a wide temperature range. Operating life expectancy is greater than 2500 hours.

GENERAL CHARACTERISTICS [1]

ELECTRICAL [2]

Frequency Range	9.3-9.5 GHz
Peak Power	50 kW
Duty Cycle	0.001
Recovery Time	3.0 μs
Spike Leakage, max	0.1 erg
Flat Leakage, max	50 mW
Insertion Loss	0.7 dB
VSWR	1.1:1
Position of Short [3]	0.058-0.072 in/1.47-1.83 mm

PHYSICAL

Dimensions	See Outline Drawing
Weight, approx	8 oz/227 g
Mating Flanges	UG-135/U or equivalent

ENVIRONMENTAL

Altitude	70,000 ft/21 km
Vibration, 50 ± 2 Hz	15 G
Pressurization	30 lbf/in² g
Operating Temperature	-55 to +90 °C

TYPICAL OPERATING CONDITIONS [1]

Frequency Range	9.3-9.5 GHz
Peak Transmitter Power	40 kW
Transmitter Pulse Width	1 μs
Pulse Repetition Rate	1000 pps
Recovery Time	1 μs
Breakdown Power	100 mW
Spike Leakage	0.03 erg
Flat Leakage	40 mW
Insertion Loss	0.65 dB

OUTLINE DRAWING

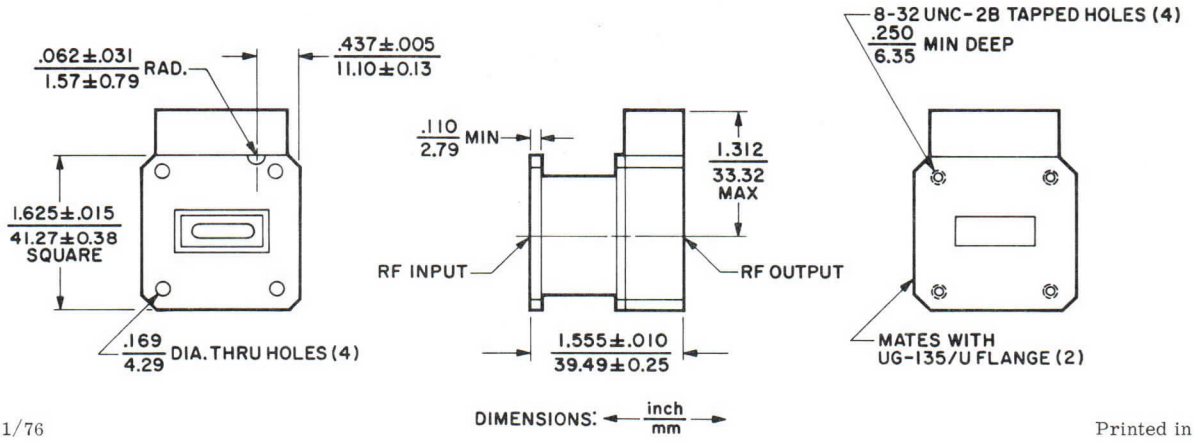

3491 1/76

Printed in U.S.A.

CHARACTERISTIC CURVES [1]

Typical performance values

SPIKE LEAKAGE VARIATION WITH FREQUENCY

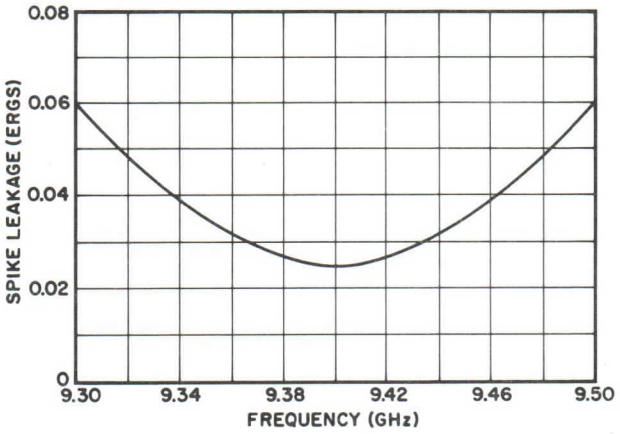

RECOVERY TIME VARIATION WITH TEMPERATURE

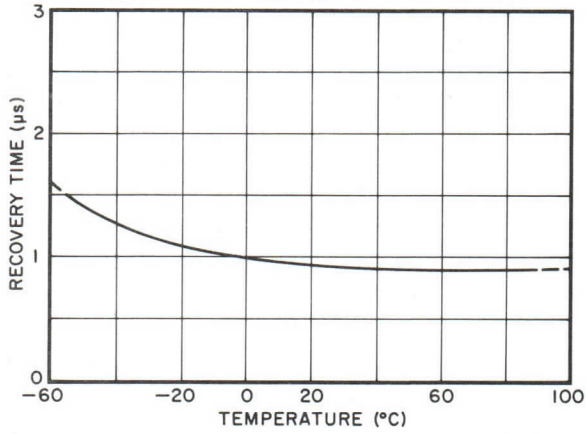

SPIKE LEAKAGE VARIATION WITH PULSE REPETITION RATE

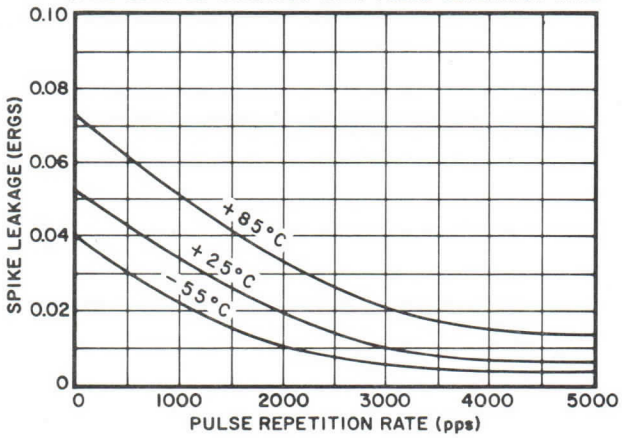

NOTES:

1. General characteristics, operating conditions, and characteristic curves are based on performance tests. These figures may change without notice as the result of additional performance data or product refinement. Varian Beverly should be consulted before using this information for final equipment design.
2. Values apply at 25°C and sea level atmospheric pressure.
3. Distance of the effective rf short circuit behind face of input flange.

varian

TECHNICAL DATA

VDX-1137

DURATEMP®
SINGLE PASSIVE
TR LIMITER
9.3-9.5 GHz

DESCRIPTION

The VDX-1137 is a single bandpass DURATEMP Passive TR Limiter (TRL) which operates in the frequency range of 9.3 to 9.5 gigahertz. This X-band receiver protector provides low leakage power and fast recovery time over a wide range of incident power. The VDX-1137 was designed especially to replace the VDX-1135 used in Marconi Predictor and Radio Locator 12 and 16 marine radars. The TRL employs special high-temperature processing techniques which greatly increase shelf and operating life. It maintains stable operation over a wide temperature range. Operating life expectancy is greater than 2500 hours.

GENERAL CHARACTERISTICS [1]

ELECTRICAL [2]

Frequency Range	9.3-9.5 GHz
Peak Power	25 kW
Duty Cycle	0.001
Recovery Time	3.0 μs
Spike Leakage	0.05 erg
Flat Leakage, max	50 mW
Insertion Loss	0.8 dB
VSWR	1.3:1
Position of Short [3]	0.011-0.031 in/0.28-0.79 mm

PHYSICAL

Dimensions	See Outline Drawing
Weight, approx	8 oz/227 g
Mating Flanges	UG-135/U or equivalent

ENVIRONMENTAL

Altitude	70,000 ft/21 km
Vibration, 50 ± 2 Hz	15 G
Pressurization	30 lbf/in² g
Operating Temperature	-55 to +90 °C

TYPICAL OPERATING CONDITIONS [1]

Frequency Range	9.3-9.5 GHz
Peak Transmitter Power	25 kW
Transmitter Pulse Width	1 μs
Pulse Repetition Rate	1000 pps
Recovery Time	2 μs
Breakdown Power	100 mW
Spike Leakage	0.03 erg
Flat Leakage	40 mW
Insertion Loss	0.7 dB

OUTLINE DRAWING

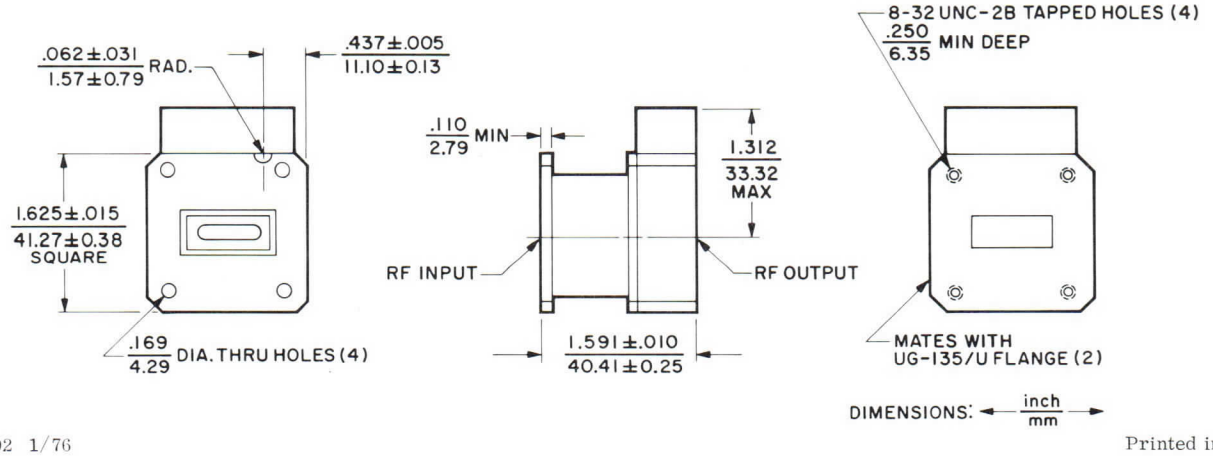

3492 1/76

Printed in U.S.A.

CHARACTERISTIC CURVES [1]

Typical performance values

SPIKE LEAKAGE VARIATION WITH FREQUENCY

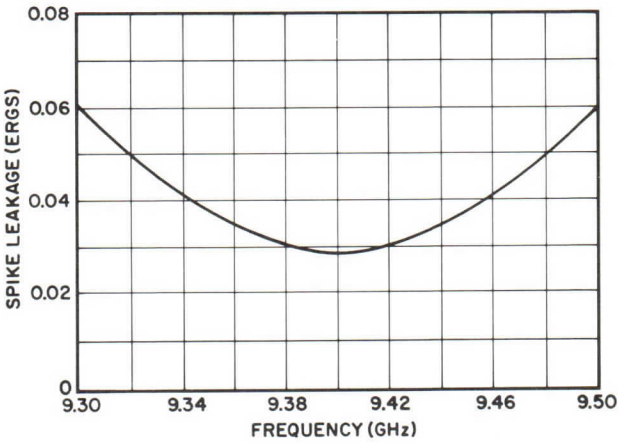

RECOVERY TIME VARIATION WITH TEMPERATURE

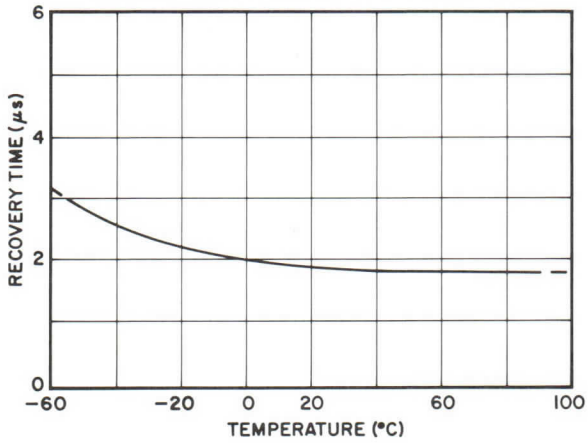

SPIKE LEAKAGE VARIATION WITH PULSE REPETITION RATE

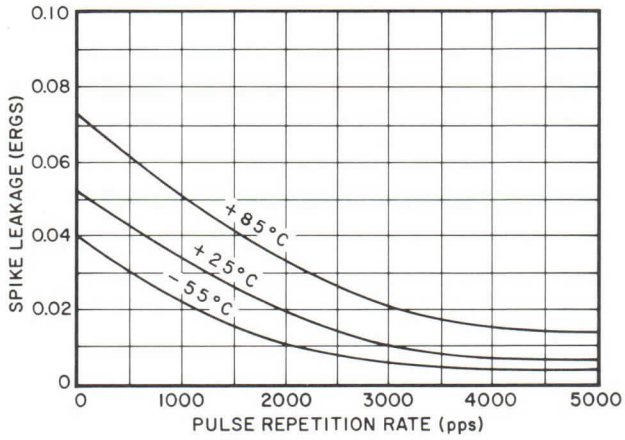

NOTES:

1. General characteristics, operating conditions, and characteristic curves are based on performance tests. These figures may change without notice as the result of additional performance data or product refinement. Varian Beverly should be consulted before using this information for final equipment design.
2. Values apply at 25°C and sea level atmospheric pressure.
3. Distance of the effective rf short circuit behind face of input flange.

varian

TECHNICAL DATA

VDX-1138

DURATEMP SINGLE PASSIVE TR LIMITER

9.3-9.5 GHz

DESCRIPTION

The VDX-1138 is a single bandpass DURATEMP Passive TR Limiter (TRL) which operates in the frequency range of 9.3 to 9.5 gigahertz. This X-band receiver protector provides low leakage power and fast recovery time over a wide range of incident power. The VDX-1138 was designed especially for operation in Decca RM914A, RM916A, and RM1216A marine radars. The VDX-1138 is a direct replacement for the BS-958. The TRL employs special high-temperature processing techniques which greatly increase shelf and operating life. It maintains stable operation over a wide temperature range. Operating life expectancy is greater than 2500 hours.

GENERAL CHARACTERISTICS [1]

ELECTRICAL

Frequency Range	9.3-9.5 GHz
Peak Power	40 kW
Duty Cycle	0.001
Recovery Time	3.0 μs
Spike Leakage, max	0.05 erg
Flat Leakage, max	50 mW
Insertion Loss	0.8 dB
VSWR	1.4:1

PHYSICAL

Dimensions	See Outline Drawing
Weight, approx	8 oz/227 g
Mating Flanges	UG-135/U or equivalent
Position of Short[3]	
Gap Discharge	0.22-0.26 in/5.6-6.6 mm
Window Discharge	0.22-0.24 in/5.6-6.1 mm

ENVIRONMENTAL

Altitude	70,000 ft/21 km
Vibration, 50 ± 2 Hz	50 G
Pressurization	30 lbf/in^{2}g (2.1 kgf/cm^{2}g)
Operating Temperature	-55 to +90 °C

TYPICAL OPERATING CONDITIONS [1]

Frequency Range	9.3-9.5 GHz
Peak Transmitter Power	40 kW
Transmitter Pulse Width	1.0 μs
Pulse Repetition Rate	1000 pps
Recovery Time	1.5 μs
Breakdown Power	100 mW
Spike Leakage	0.03 erg
Flat Leakage	40 mW
Insertion Loss	0.7 dB

OUTLINE DRAWING

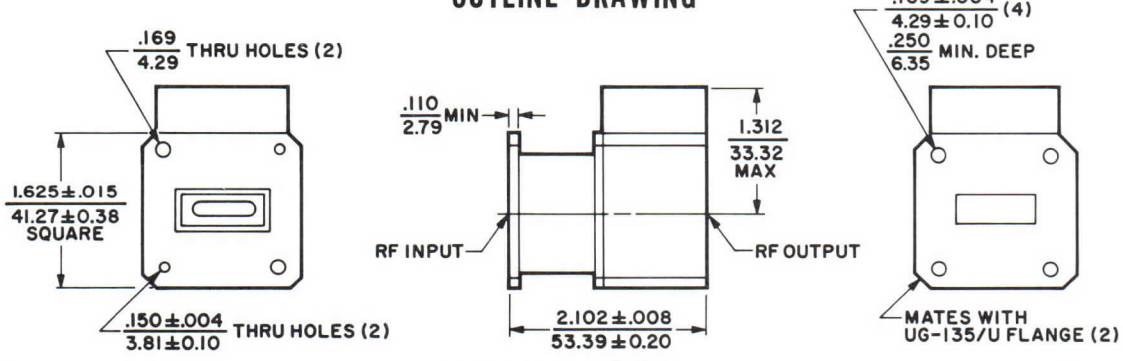

DIMENSIONS: ← inch / mm →

3493 6/76

Printed in U.S.A.

CHARACTERISTIC CURVES[1]

Typical performance values

SPIKE LEAKAGE VARIATION WITH FREQUENCY

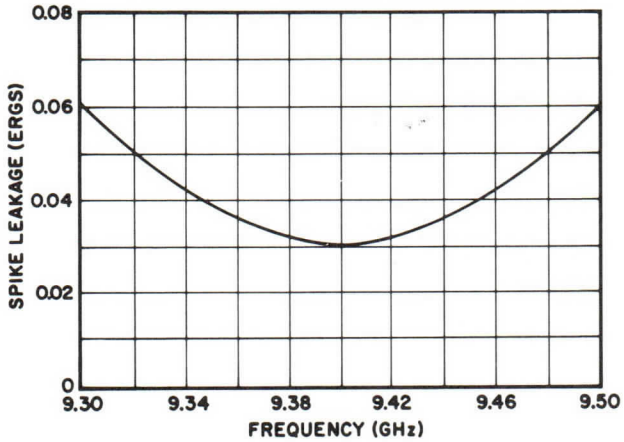

RECOVERY TIME VARIATION WITH TEMPERATURE

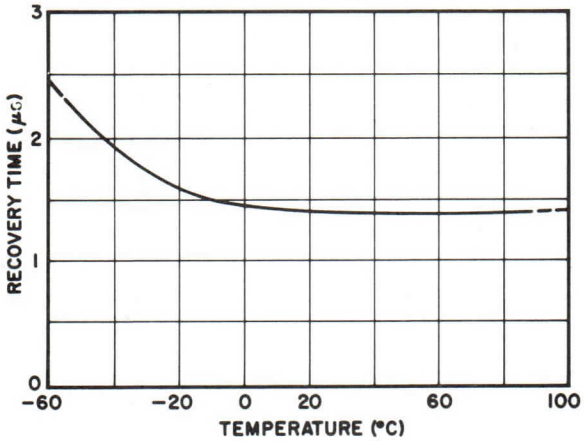

SPIKE LEAKAGE VARIATION WITH PULSE REPETITION RATE

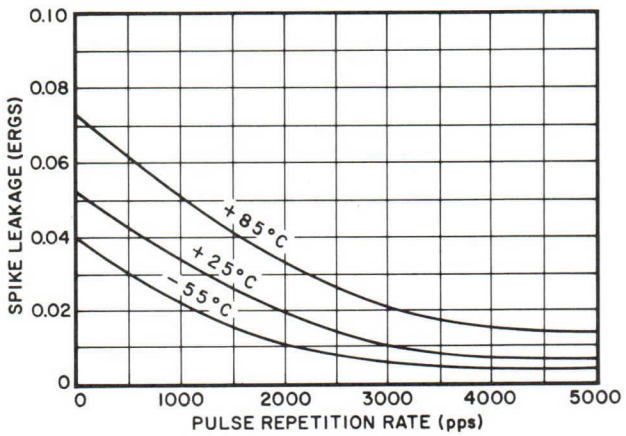

NOTES:

1. General characteristics, operating conditions, and characteristic curves are based on performance tests. These figures may change without notice as the result of additional performance data or product refinement. The Varian Beverly Division should be consulted before using this information for final equipment design.
2. Values apply at 25°C and sea level atmospheric pressure.
3. Distance of the effective r-f short circuit behind the face of the input flange.

varian

TECHNICAL DATA

VDX-1142

DURATEMP ®
SINGLE PASSIVE
TR LIMITER
9.3-9.5 GHz

DESCRIPTION

The VDX-1142 is a single bandpass DURATEMP Passive TR Limiter (TRL) which operates in the frequency range of 9.3 to 9.5 gigahertz. This X-band receiver protector provides low leakage power and fast recovery time over a wide range of incident power. The VDX-1142 was designed especially for operation in Decca RM914A, RM916A, and RM1216A marine radars. The VDX-1142 is a direct replacement for the BS-256. The TRL employs special high-temperature processing techniques which greatly increase shelf and operating life. It maintains stable operation over a wide temperature range. Operating life expectancy is greater than 2500 hours.

GENERAL CHARACTERISTICS[1]

ELECTRICAL[2]

Frequency Range	9.3-9.5 GHz
Peak Power	100 kW
Duty Cycle	0.001
Recovery Time	3.0 μs
Spike Leakage, max	0.05 erg
Flat Leakage, max	60 mW
Insertion Loss	0.8 dB
VSWR	1.4:1

PHYSICAL

Dimensions	See Outline Drawing
Weight, approx	8 oz/227 g
Mating Flanges	UG-135/U or equivalent
Position of Short Circuit	
Gap Discharge[3]	0.22-0.26 in/5.6-6.6 mm
Window Discharge	0.20-0.24 in/5.1-6.1 mm

ENVIRONMENTAL

Altitude	70,000 ft/21 km
Vibration, 50 ± 2 Hz	15 G
Pressurization	30 lbf/in²g
Operating Temperature	-55 to +90 °C

TYPICAL OPERATING CONDITIONS[1]

Frequency Range	9.3-9.5 GHz
Peak Transmitter Power	40 kW
Transmitter Pulse Width	1 μs
Pulse Repetition Rate	1000 pps
Recovery Time	1.5 μs
Breakdown Power	100 mW
Spike Leakage	0.03 erg
Flat Leakage	45 mW
Insertion Loss	0.7 dB

OUTLINE DRAWING

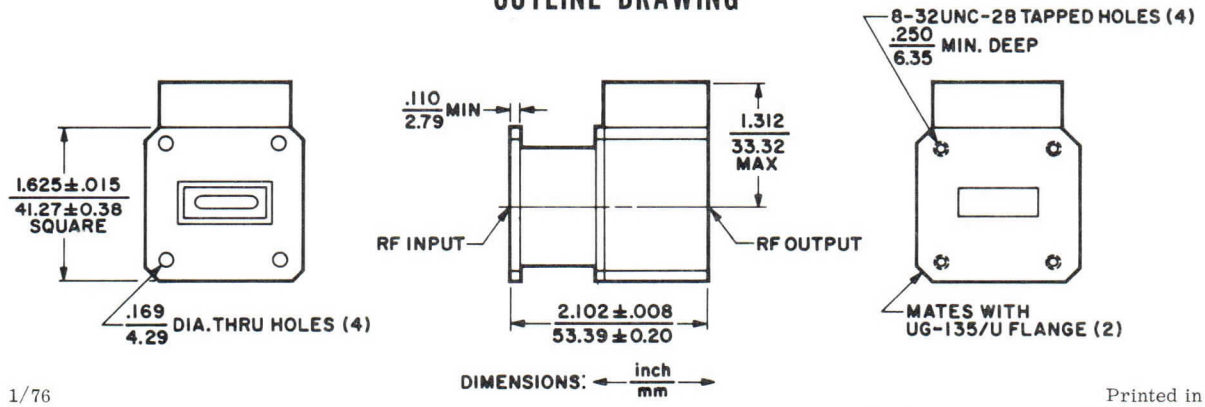

3494 1/76

Printed in U.S.A.

CHARACTERISTIC CURVES [1]

Typical performance values

SPIKE LEAKAGE VARIATION WITH FREQUENCY

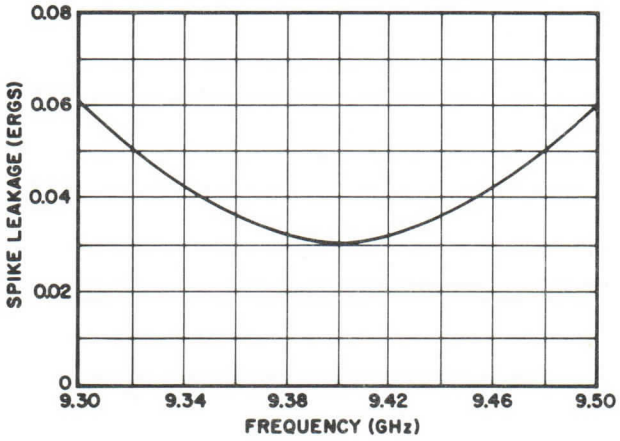

RECOVERY TIME VARIATION WITH TEMPERATURE

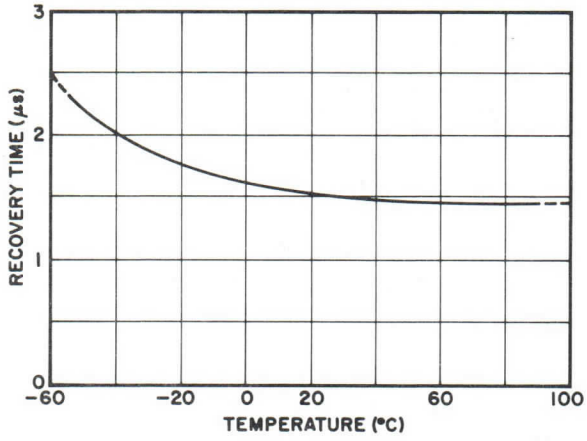

SPIKE LEAKAGE VARIATION WITH PULSE REPETITION RATE

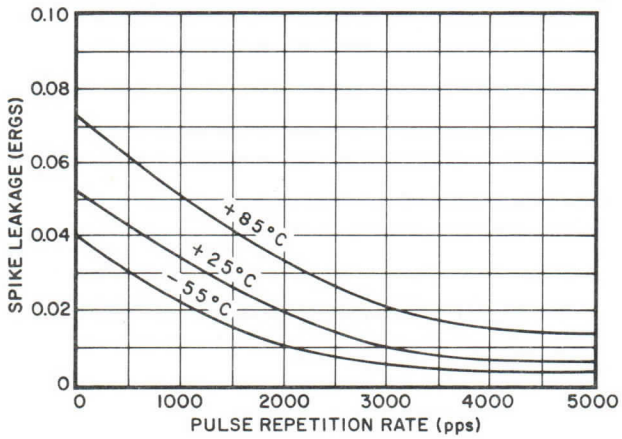

NOTES:

1. General characteristics, operating conditions, and characteristic curves are based on performance tests. These figures may change without notice as the result of additional performance data or product refinement. Varian Beverly should be consulted before using this information for final equipment design.
2. Values apply at 25°C and sea level atmospheric pressure.
3. Distance of the effective rf short circuit behind face of input flange.

varian

TECHNICAL DATA

VDX-1155

RF SWITCH

9.3-9.5 GHz
75 kW

DESCRIPTION

The VDX-1155 is a solid-state, single-pole, double-throw, passive, bandpass r-f switch used as a receiver protector. It operates over the frequency range of 9.3 to 9.5 gigahertz. This X-band receiver protector provides low leakage power and fast recovery time over a wide range of incident power. The VDX-1155 was designed especially for operation in boat radars and is intended to replace the E3902. Operating life expectancy is greater than 2000 hours.

GENERAL CHARACTERISTICS[1]

ELECTRICAL

Frequency Range	9.3-9.5 GHz
Peak Power, max	75 kW
Duty Cycle, max	0.001
Recovery Time, max	2 μs
Spike Leakage, max	0.05 erg
Flat Leakage, max	50 mW
Insertion Loss, max	0.85 dB
VSWR	1.4:1

PHYSICAL

Dimensions	See Outline Drawing
Weight, approximate	6 oz/170 g
Mating Flanges	UG-135/U or equivalent

ENVIRONMENTAL

Altitude	50,000 ft
Vibration, 50 ± 2 Hz	15 G
Operating Temperature	-10 to +60 °C

TYPICAL OPERATING CONDITIONS[1,2]

Frequency Range	9.3-9.5 GHz
Peak Transmitter Power	50 kW
Transmitter Pulse Width	1.0 μs
Pulse Repetition Rate	1000 pps
Recovery Time	1.5 μs
Breakdown Power	100 mW
Spike Leakage	0.03 erg
Flat Leakage	40 mW
Insertion Loss	0.75 dB

OUTLINE DRAWING

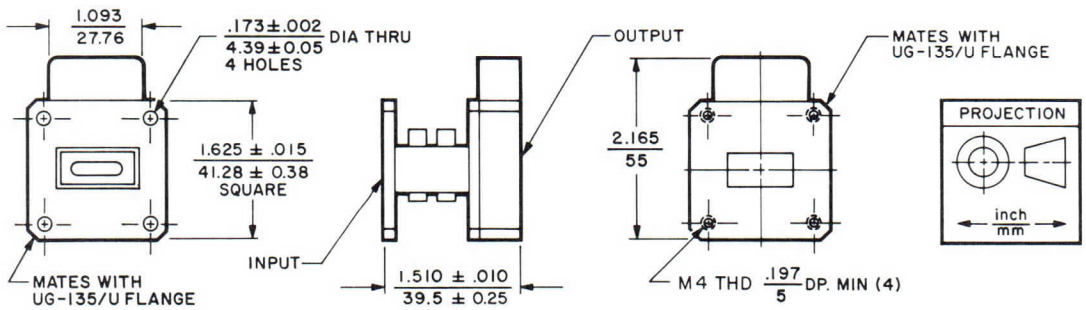

3695 6/77

Printed in U.S.A.

CHARACTERISTIC CURVES [1]

Typical performance values

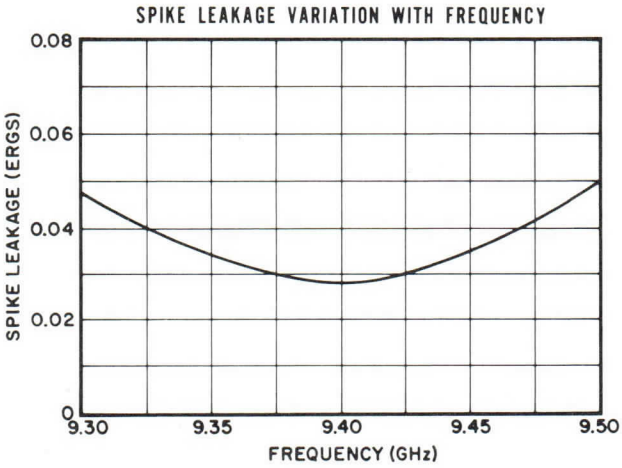

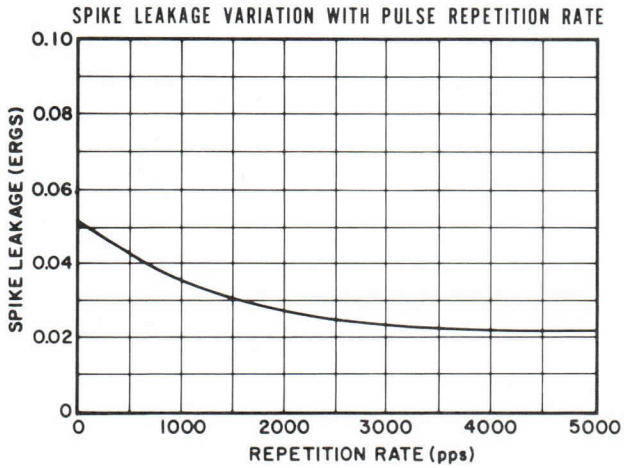

NOTES:

1. Characteristic values are based on performance tests. These figures may change without notice as a result of additional data or product refinement. Consult the Varian Beverly Division before using this information for final equipment design.

2. Values apply at 25°C and sea level atmospheric pressure.

varian

TECHNICAL DATA

VDX-1157

RF SWITCH

9.3-9.5 GHz
40 kW

DESCRIPTION

The VDX-1157 is a solid-state, single-pole, double-throw, bandpass r-f switch used as a receiver protector. It operates over the frequency range of 9.3 to 9.5 gigahertz. This X-band receiver protector provides low leakage power and fast recovery time over a wide range of incident power. The VDX-1157 was designed especially for operation in boat radars and is intended to replace the WF409L. Operating life expectancy is greater than 2000 hours.

GENERAL CHARACTERISTICS[1]

ELECTRICAL[2]

Frequency Range	9.3-9.5 GHz
Peak Power	40 kW
Duty Cycle	0.001
Recovery Time	3.0 μs
Spike Leakage, max	0.05 erg
Flat Leakage, max	50 mW
Insertion Loss	0.8 dB
Ignitor Open Circuit Voltage, min	-700 Vdc
Ignitor Voltage Drop	175-375 Vdc
VSWR	1.4:1

PHYSICAL

Dimensions	See Outline Drawing
Weight, approx	8 oz/227 g
Mating Flanges	UG-135/U or equivalent
Position of Short[3]	
Gap Discharge	0.22-0.26 in/5.6-6.6 mm
Window Discharge	0.22-0.24 in/5.6-6.1 mm

ENVIRONMENTAL

Altitude	70,000 ft/21 km
Vibration, 50 ± 2 Hz	50 G
Pressurization	30 lbf/in^{2}g (2.1 kgf/cm^{2}g)
Operating Temperature	-10 to +60 °C

TYPICAL OPERATING CONDITIONS[1,2]

Frequency Range	9.3-9.5 GHz
Peak Transmitter Power	40 kW
Transmitter Pulse Width	1.0 μs
Pulse Repetition Rate	1000 pps
Recovery Time	1.5 μs
Breakdown Power	100 mW
Spike Leakage	0.03 erg
Flat Leakage	40 mW
Insertion Loss	0.7 dB
Ignitor Current[4]	150 μAdc
Ignitor Voltage Drop	235 Vdc

OUTLINE DRAWING

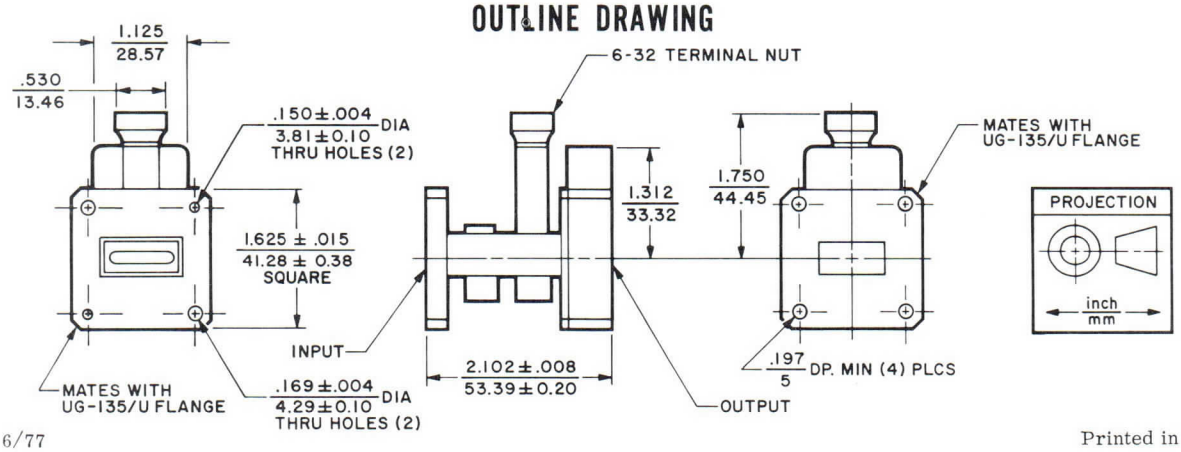

3696 6/77

Printed in U.S.A.

CHARACTERISTIC CURVES [1]

Typical performance values

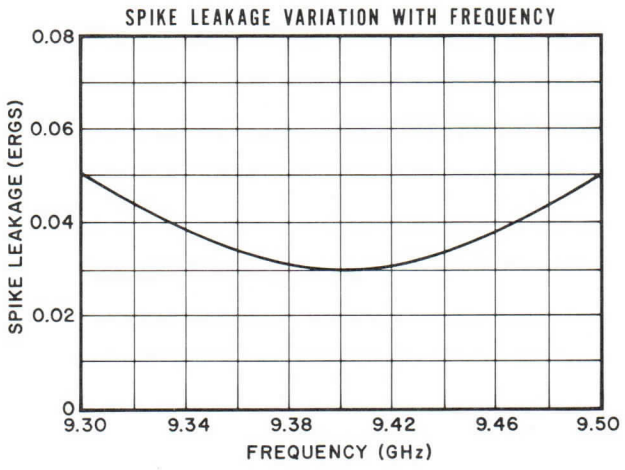

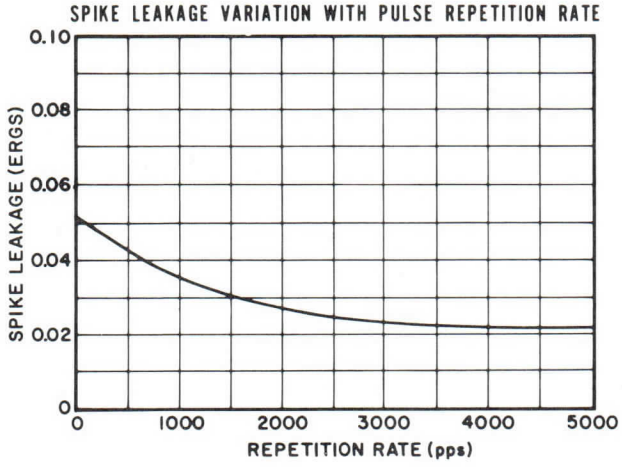

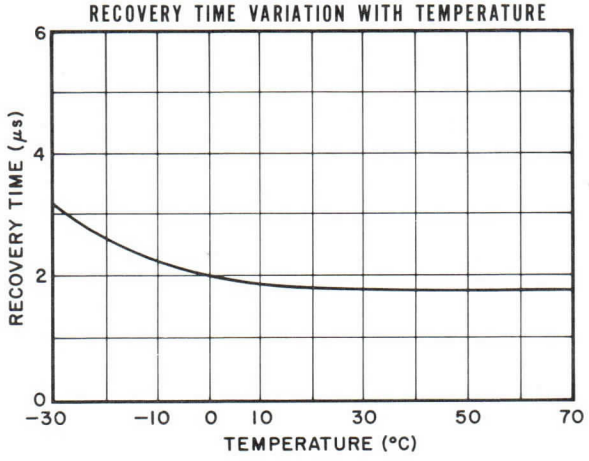

NOTES:

1. Characteristic values are based on performance tests. These figures may change without notice as a result of additional data or product refinement. Consult the Varian Beverly Division before using this information for final equipment design.

2. Values apply at 25°C and sea level atmospheric pressure.

3. Distance of the effective r-f short circuit behind the face of the input flange.

4. To calculate the value of ignitor series resistance required, use the following formula:

Example: $R_i = \frac{700-235}{150} = 3.10$ megohms

$$R_i = \frac{Ebb-Eid}{I_i}$$

where

R_i = Total ignitor-circuit series resistance in megohms
Ebb = Ignitor open-circuit supply voltage in volts
Eid = Ignitor voltage drop in volts
I_i = Ignitor current in microamperes

(To prevent oscillation, at least 0.5 megohm of the total series resistance should be close to the ignitor cap.)

varian
eastern tube division

TECHNICAL DATA

6624

SINGLE TR TUBE

5.35-5.45 GHz

DESCRIPTION

The 6624 is a single bandpass TR tube which operates in the frequency range of 5.35 to 5.45 gigahertz. This C-band duplexing tube was designed for operation in AVQ-10 weather radars. It should be used for replacement purposes only. For new systems and for improved system performance, the BTR-547 is recommended. Operating life expectancy is greater than 500 hours.

OUTLINE DRAWING

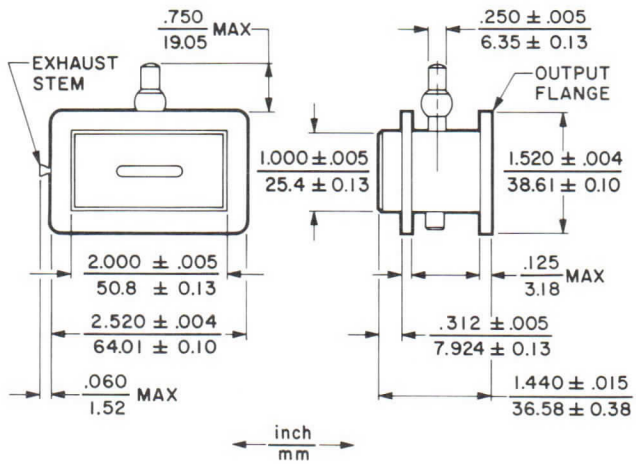

GENERAL CHARACTERISTICS[1]

ELECTRICAL

Frequency Range	5.35-5.45 GHz
Peak Power	85 kW
Duty Cycle	0.001
Recovery Time	15 μs
Spike Leakage, max	0.3 erg
Flat Leakage, max	50 mW
Insertion Loss	0.7 dB
Ignitor Open Circuit Voltage, min	-700 Vdc
Ignitor Voltage Drop	175 to 375 Vdc
VSWR	1.4:1

PHYSICAL

Dimensions	See Outline Drawing
Weight, approx	6 oz
Mating Flanges	See Outline Drawings

ENVIRONMENTAL

Altitude	70,000 ft
Vibration, 50 ± 2 Hz	15 G
Pressurization	30 lbf/in²g
Operating Temperature	-40 to +70 °C

TYPICAL OPERATING CONDITIONS[1]

Frequency Range	5.35-5.45 GHz
Peak Transmitter Power	85 kW
Transmitter Pulse Width	1.0 μs
Pulse Repetition Rate	1000 pps
Recovery Time	8 μs
Spike Leakage	0.18 erg
Flat Leakage	40 mW
Insertion Loss	0.6 dB
Ignitor Current[2]	150 μAdc
Ignitor Voltage Drop	225 Vdc

NOTES:

1. General characteristics, operating conditions, and characteristic curves are based on performance tests. These figures may be changed without notice as the result of additional performance data or product refinement. The Varian Eastern Tube Division should be consulted before using this information for final equipment design.

2. To calculate the value of ignitor series resistance required, use the following formula:

$$R_i = \frac{Ebb-Eid}{I_i}$$

where

R_i = Total ignitor-circuit series resistance in megohms
Ebb = Ignitor open-circuit supply voltage in volts
Eid = Ignitor voltage drop in volts
I_i = Ignitor current in microamperes

Example: $R_i = \frac{700-225}{150} = 3.167$ megohms

(To prevent oscillation, at least 0.5 megohm of the total series resistance should be close to the ignitor cap.)

3029 7/73

Printed in U.S.A.

CHARACTERISTIC CURVES [1]

Typical performance values

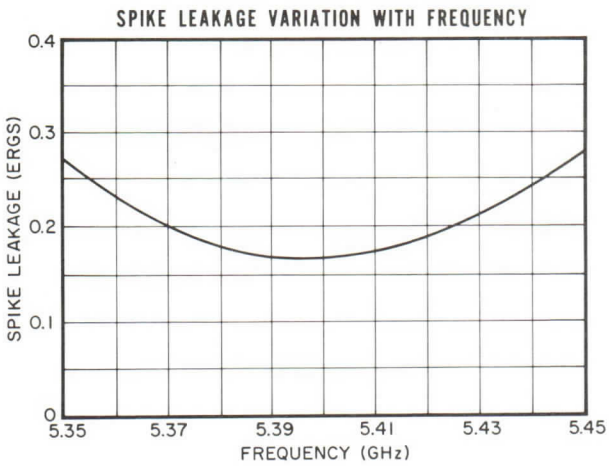

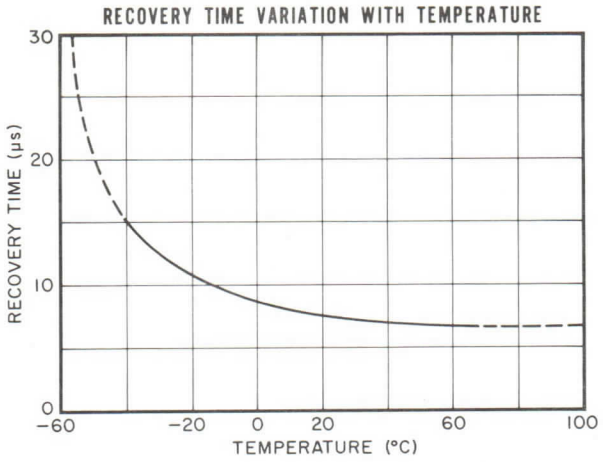

OUTLINE DRAWINGS

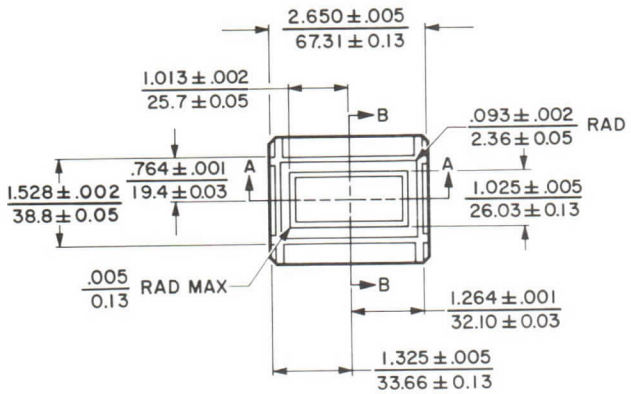

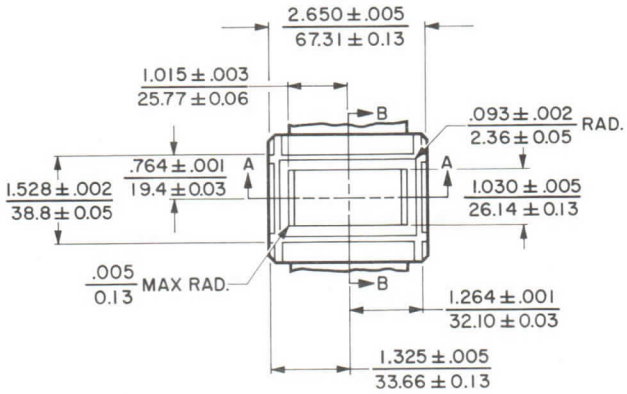

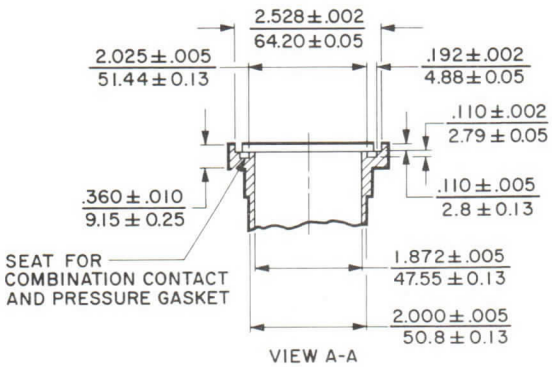

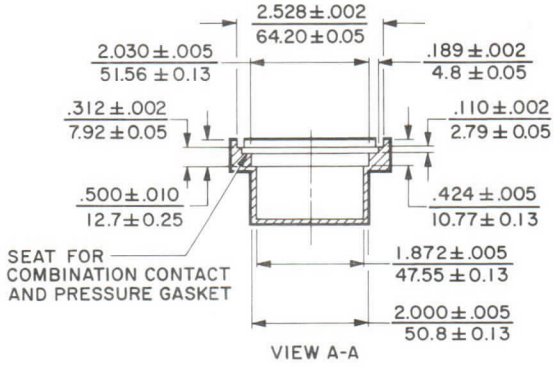

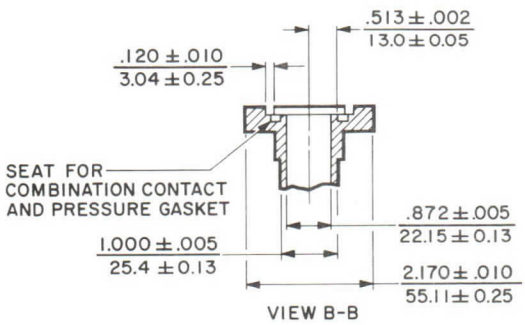

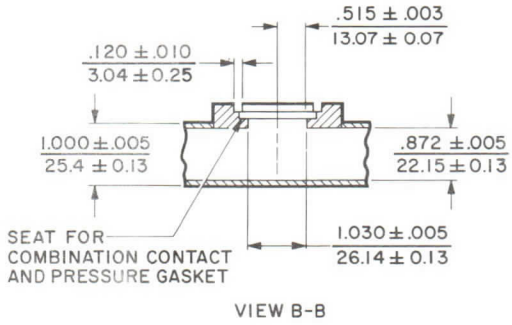

inch / mm

OUTPUT MOUNTING SEAT

INPUT MOUNTING SEAT

varian
eastern tube division

TECHNICAL DATA

6795

SINGLE TR TUBE

9.325-9.425 GHz

DESCRIPTION

The 6795 is a single bandpass TR tube which operates in the frequency range of 9.325 to 9.425 gigahertz. This X-band receiver protector was designed specifically for operation in WP-103, WP-103G, and APN-158 weather radar systems. It should be used only for replacement purposes. For new systems, or improved system performance, the BTR-545A is recommended. Operating life expectancy is greater than 500 hours.

OUTLINE DRAWING

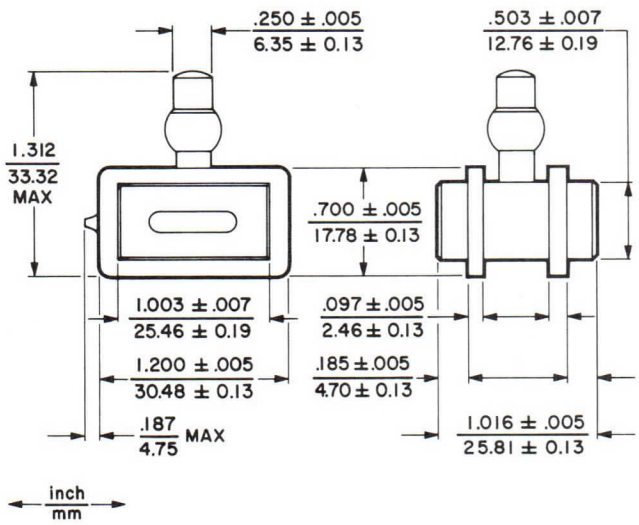

GENERAL CHARACTERISTICS[1]

ELECTRICAL

Frequency Range	9.325-9.425	GHz
Peak Power	20	kW
Duty Cycle	0.001	
Recovery Time, max	10	μs
Spike Leakage, max	0.25	erg
Flat Leakage, max	40	mW
Insertion Loss	0.7	dB
Open Circuit Ignitor Voltage, min	-650	Vdc
Ignitor Voltage Drop	175 to 375	Vdc
VSWR	1.4:1	

PHYSICAL

Dimensions	See Outline Drawing
Weight, approx	1.25 oz
Mating Flanges	Special

ENVIRONMENTAL

Altitude	70,000	ft
Vibration, 50 ± 2 Hz	15	G
Pressurization	30	$lbf/in^2 g$
Operating Temperature	-40 to +70	°C

TYPICAL OPERATING CONDITIONS[1]

Frequency Range	9.325-9.425	GHz
Peak Transmitter Power	20	kW
Transmitter Pulse Width	1.0	μs
Pulse Repetition Rate	1000	pps
Recovery Time	4	μs
Spike Leakage	0.18	erg
Flat Leakage	20	mW
Insertion Loss	0.6	dB
Ignitor Current[2]	150	μAdc
Ignitor Voltage Drop	225	Vdc

3030 7/73

Printed in U.S.A.

CHARACTERISTIC CURVES [1]

Typical performance values

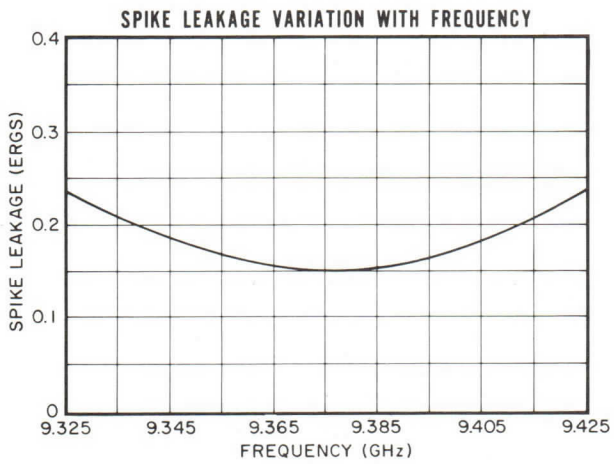

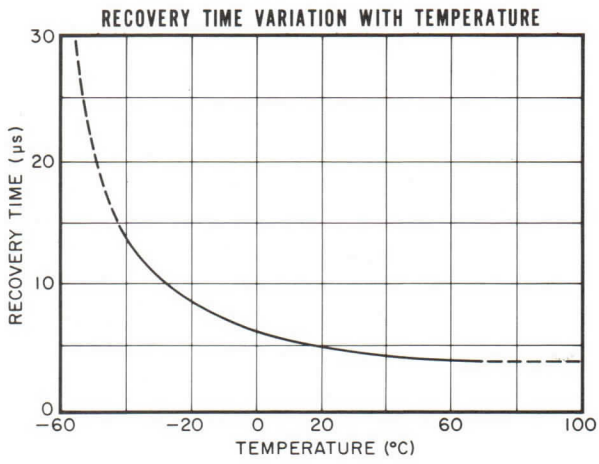

NOTES:

1. General characteristics, operating conditions, and characteristic curves are based on performance tests. These figures may be changed without notice as the result of additional performance data or product refinement. The Varian Eastern Tube Division should be consulted before using this information for final equipment design.

2. To calculate the value of ignitor series resistance required, use the following formula:

$$R_i = \frac{Ebb-Eid}{I_i}$$

where

R_i = Total ignitor-circuit series resistance in megohms
Ebb = Ignitor open-circuit supply voltage in volts
Eid = Ignitor voltage drop in volts
I_i = Ignitor current in microamperes

Example: $R_i = \frac{650-225}{150} = \frac{425}{150} = 2.833$ megohms

(To prevent oscillation, at least 0.5 megohm of the total series resistance should be close to the ignitor cap.)

varian
eastern tube division

TECHNICAL DATA

6795A

SINGLE TR TUBE

9.0-9.4 GHz

DESCRIPTION

The 6795A is a single bandpass TR tube which operates in the frequency range of 9.0 to 9.4 gigahertz. This broadband version of the 6795 X-band receiver protector was designed specifically for operation in WP-103, WP-103G, and APN-158 weather radar systems. It should be used only for replacement purposes. For new systems, or improved system performance, the BTR-545B is recommended. Operating life expectancy is greater than 500 hours.

OUTLINE DRAWING

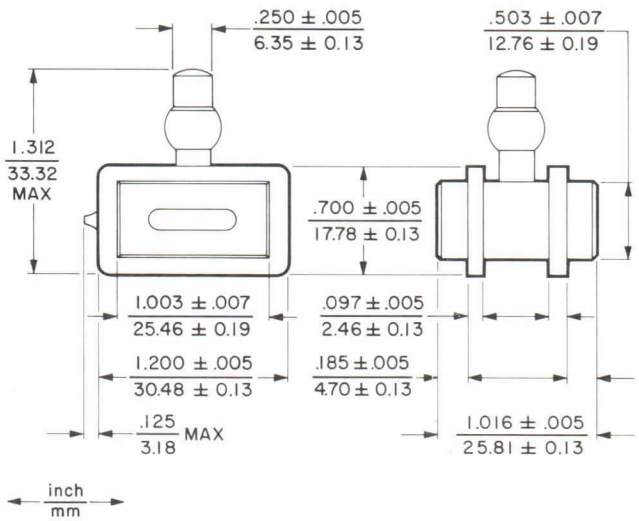

GENERAL CHARACTERISTICS [1]

ELECTRICAL

Frequency Range	9.0-9.4	GHz
Peak Power	20	kW
Duty Cycle	0.001	
Recovery Time, max	10	μs
Spike Leakage, max	0.25	erg
Flat Leakage, max	40	mW
Insertion Loss	0.7	dB
Open Circuit Ignitor Voltage, min	-650	Vdc
Ignitor Voltage Drop	175 to 375	Vdc
VSWR	1.4:1	

PHYSICAL

Dimensions	See Outline Drawing	
Weight, approx	1.25	oz
Mating Flanges	Special	

ENVIRONMENTAL

Altitude	70,000	ft
Vibration, 50 ± 2 Hz	15	G
Pressurization	30	lbf/in^2g
Operating Temperature	-40 to +70	°C

TYPICAL OPERATING CONDITIONS [1]

Frequency Range	9.0-9.4	GHz
Peak Transmitter Power	20	kW
Transmitter Pulse Width	1.0	μs
Pulse Repetition Rate	1000	pps
Recovery Time	4	μs
Spike Leakage	0.18	erg
Flat Leakage	20	mW
Insertion Loss	0.6	dB
Ignitor Current [2]	150	μAdc
Ignitor Voltage Drop	225	Vdc

3085 9/73

Printed in U.S.A.

CHARACTERISTIC CURVES [1]

Typical performance values

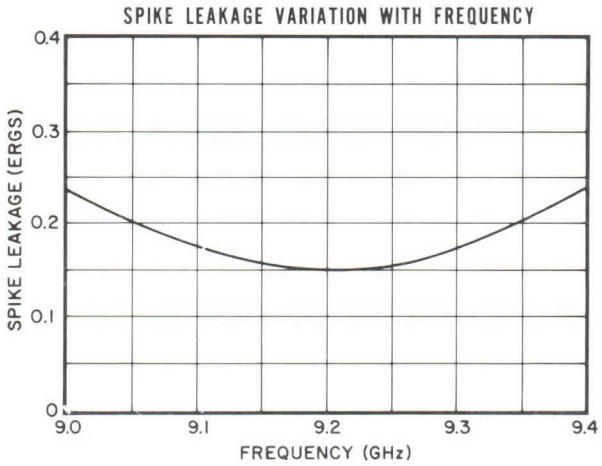

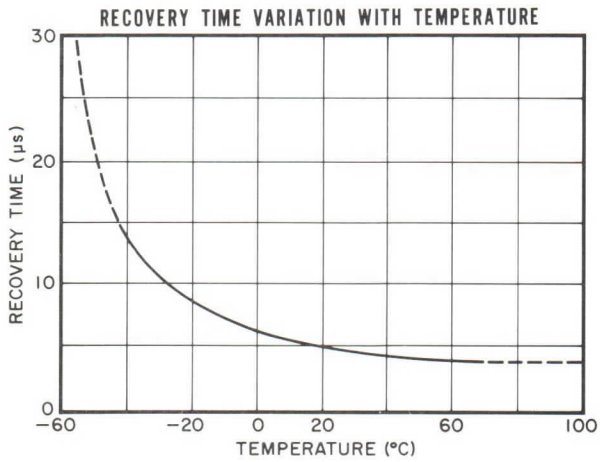

NOTES:

1. General characteristics, operating conditions, and characteristic curves are based on performance tests. These figures may be changed without notice as the result of additional performance data or product refinement. The Varian Eastern Tube Division should be consulted before using this information for final equipment design.

2. To calculate the value of ignitor series resistance required, use the following formula:

$$R_i = \frac{Ebb-Eid}{I_i}$$

where

R_i = Total ignitor-circuit series resistance in megohms
Ebb = Ignitor open-circuit supply voltage in volts
Eid = Ignitor voltage drop in volts
I_i = Ignitor current in microamperes

Example: $R_i = \frac{650-225}{150} = \frac{425}{150} = 2.833$ megohms

(To prevent oscillation, at least 0.5 megohm of the total series resistance should be close to the ignitor cap.)

varian beverly

TECHNICAL DATA

VFS-9501

SOLID-STATE
FERRITE/DIODE LIMITER

2.9-3.1 GHz

DESCRIPTION

The VFS-9501 is a passive solid-state limiter consisting of a ferrite limiter, for handling high power, and a diode limiter, for reducing spike- and flat-leakage power to levels which assure reliable receiver protection. This integral unit is a complete solid-state replacement for many S-band gas-type TR tubes.

It provides exceptionally fast recovery time over a wide range of incident power. Life expectancy is greater than 10,000 hours.

Units can be supplied for operation over other 200-megahertz bandwidths within the frequency range of 2.7 to 3.5 gigahertz.

OUTLINE DRAWING

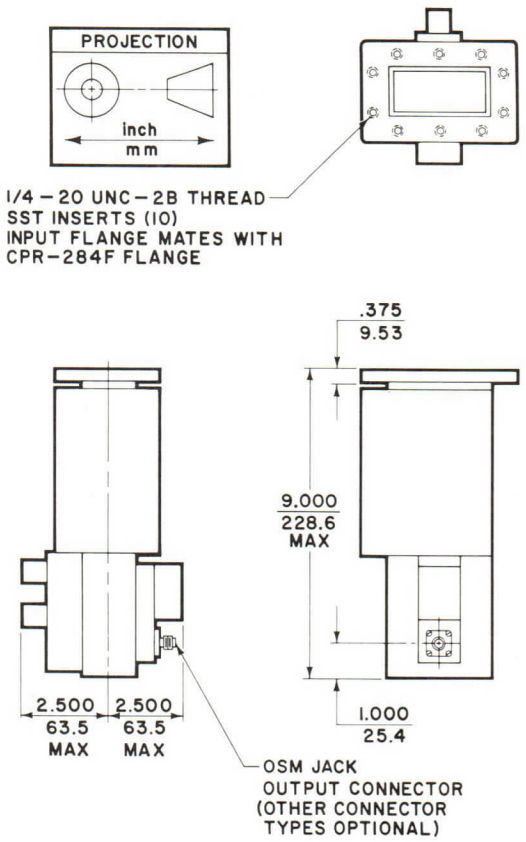

GENERAL CHARACTERISTICS

ELECTRICAL

Frequency Range	2.9-3.1 GHz
Peak Power, max	15 kW
Duty, max	0.002
Recovery Time, max	1.0 μs
Insertion Loss, max	1.0 dB
Spike Leakage, max	0.30 erg
Flat Leakage, max	100 mW
VSWR, max	1.3:1

PHYSICAL

Dimensions	See Outline Drawing
Weight, approx	8 lb/3.63 kg
Mounting Position	Any
Connections	
RF Input	Mates with CPR-284F Flange
RF Output	OSM Jack

ENVIRONMENTAL

Altitude, max	70,000 ft
Vibration, 50 ± 2 Hz	15 G
Pressurization	30 $lbf/in^2 g$
Operating Temperature	0 to 60 °C

TYPICAL OPERATING CONDITIONS

Frequency Range	2.9-3.1 GHz
Peak Transmitter Power	10 kW
Transmitter Pulse Width	1.0 μs
Pulse Repetition Rate	1000 pps
Recovery Time	0.5 μs
Spike Leakage	0.10 erg
Flat Leakage	50 mW
Insertion Loss	0.8 dB

General characteristics and operating values are based on performance tests. These figures may change without notice as a result of additional data or product refinement. Consult Varian Beverly, Beverly, Massachusetts before using this information for final equipment design.

3275 8/74

Printed in U.S.A.

varian beverly

TECHNICAL DATA

VFX-9503

SOLID-STATE FERRITE/DIODE LIMITER

9.3-9.6 GHz

DESCRIPTION

The VFX-9503 is a passive solid-state limiter consisting of a ferrite limiter, for handling high power, and a diode limiter, for reducing spike- and flat-leakage power to levels which assure reliable receiver protection. This integral unit is a complete solid-state replacement for many X-band gas-type TR tubes.

It provides exceptionally fast recovery time over a wide range of incident power. Life expectancy is greater than 10,000 hours.

Units can be supplied for operation over other 300-megahertz bandwidths within the frequency range of 8.5 to 10.0 gigahertz.

OUTLINE DRAWING

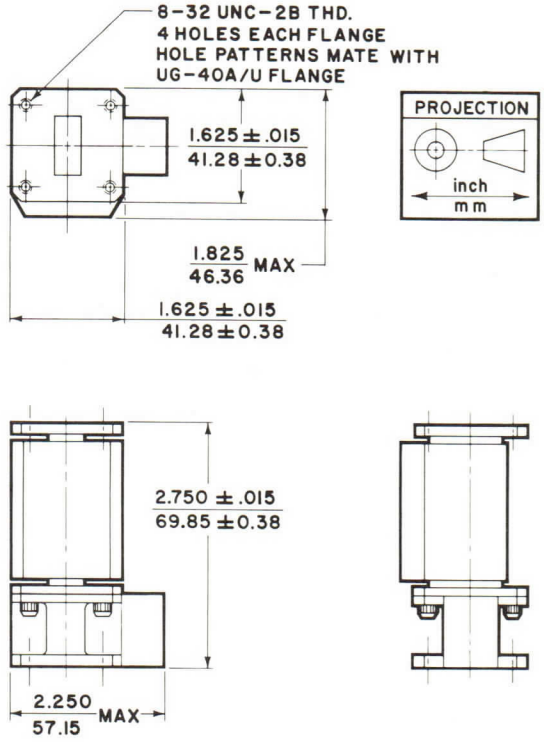

GENERAL CHARACTERISTICS

ELECTRICAL

Frequency Range	9.3-9.6	GHz
Peak Power, max	50	kW
Duty, max	0.001	
Recovery Time, max	0.2	μs
Insertion Loss, max	1.0	dB
Spike Leakage, max	0.10	erg
Flat Leakage, max	50	mW
VSWR, max	1.4:1	

PHYSICAL

Dimensions	See Outline Drawing
Weight, approx	14 oz/396 g
RF Input and Output	Mate with UG-40A/U Flanges
Mounting Position	Any

ENVIRONMENTAL

Altitude, max	70,000 ft
Vibration, 50 ± 2 Hz	15 G
Pressurization	30 $lbf/in^2 g$
Operating Temperature	-55 to +71 °C

TYPICAL OPERATING CONDITIONS

Frequency Range	9.3-9.6	GHz
Peak Transmitter Power	10	kW
Transmitter Pulse Width	1.0	μs
Pulse Repetition Rate	1000	pps
Recovery Time	0.1	μs
Breakdown Power	50	mW
Spike Leakage	0.02	erg
Flat Leakage	30	mW
Insertion Loss	0.90	dB

General characteristics and operating values are based on performance tests. These figures may change without notice as a result of **additional data or product refinement.** Consult Varian Beverly, Beverly, Massachusetts before using this information for final equipment design.

3276 8/74

Printed in U.S.A.

varian beverly

TECHNICAL DATA

VFX-9506

SOLID-STATE FERRITE/DIODE LIMITER AND PRE-TR PROTECTOR

9.3-9.6 GHz

DESCRIPTION

The VFX-9506 is a passive limiter consisting of an all-solid-state ferrite/diode limiter and a pre-TR fault protector. This integral unit is a replacement for 2000-hour gas-type TR limiters.

It provides exceptionally fast recovery time over a wide range of incident power. Life expectancy is greater than 10,000 hours.

Units can be supplied for operation over other 300-megahertz bandwidths within the frequency range of 8.5 to 10.0 gigahertz.

OUTLINE DRAWING

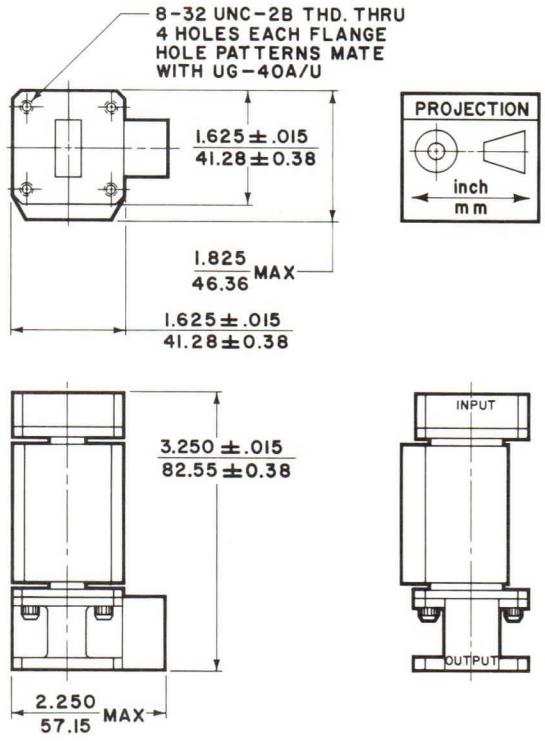

GENERAL CHARACTERISTICS

ELECTRICAL

Frequency Range	9.3-9.6	GHz
Peak Power, max	150	kW
Duty, max	0.001	
Recovery Time, max	0.2	μs
Insertion Loss, max	1.0	dB
Spike Leakage, max	0.10	erg
Flat Leakage, max	50	mW
VSWR, max	1.4:1	

PHYSICAL

Dimensions	See Outline Drawing
Weight, approx	18 oz/509 g
Mounting Position	Any
RF Input and Output	Mate with UG-40A/U Flanges

ENVIRONMENTAL

Altitude, max	70,000 ft
Vibration, 50 ± 2 Hz	15 G
Pressurization	30 lbf/in^2 g
Operating Temperature	-55 to +71 °C

TYPICAL OPERATING CONDITIONS

Frequency Range	9.3-9.6	GHz
Peak Transmitter Power	10	kW
Transmitter Pulse Width	1.0	μs
Pulse Repetition Rate	1000	pps
Recovery Time	0.1	μs
Breakdown Power	50	mW
Spike Leakage	0.02	erg
Flat Leakage	30	mW
Insertion Loss	0.90	dB

General characteristics and operating values are based on performance tests. These figures may change without notice **as a result of additional data or product refinement. Con**sult Varian Beverly, Beverly, Massachusetts before using this information for final equipment design.

3277 8/74

Printed in U.S.A.

varian beverly

TECHNICAL DATA

VFX-9513

SOLID STATE FERRITE/DIODE LIMITER

9.305-9.405 GHz

DESCRIPTION

The VFX-9513 is a passive solid-state limiter consisting of a ferrite limiter for handling high power, and a diode limiter for reducing spike- and flat-leakage power to levels which assure reliable receiver protection. It was designed for use in the AVQ21A weather radar. This integral unit is a complete solid-state replacement for many X-band gas-type TR tubes.

It provides exceptionally fast recovery time over a wide range of incident power. Life expectancy is greater than 10,000 hours.

Units can be supplied for operation over other 100-megahertz bandwidths within the frequency range of 8.5 to 10.0 gigahertz. Special units can be furnished to operate over any 300 megahertz bandwidth between 8.5 and 10 gigahertz but with slightly higher insertion loss and VSWR.

OUTLINE DRAWING

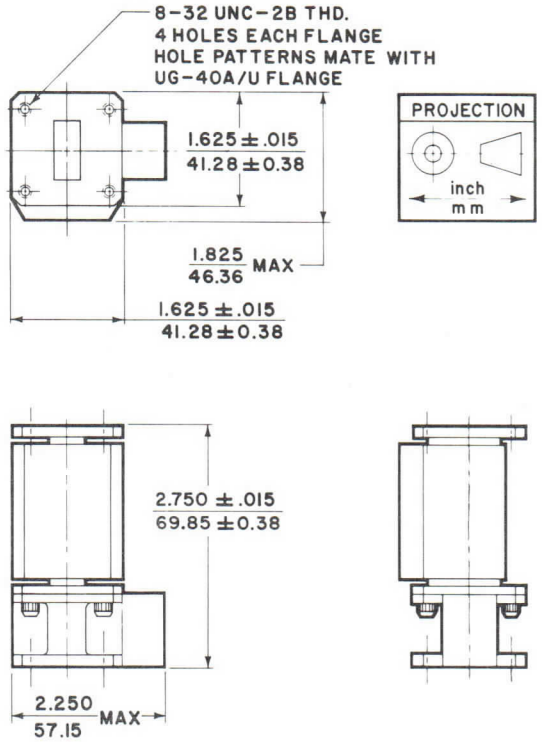

GENERAL CHARACTERISTICS [1]

ELECTRICAL

Frequency Range	9.305-9.405	GHz
Peak Power, max	10	kW
Duty, max	0.001	
Recovery Time, max	1.0	μs
Insertion Loss, max	1.0	dB
Spike Leakage, max	0.10	erg
Flat Leakage, max	50	mW
VSWR, max	1.3:1	

PHYSICAL

Dimensions	See Outline Drawing
Weight, approx	14 oz/396 g
RF Input and Output	Mate with UG-40A/U Flanges
Mounting Position	Any

ENVIRONMENTAL

Altitude, max	70,000 ft
Vibration, 50 ± 2 Hz	15 G
Pressurization	30 lbf/in^2g
Operating Temperature	-55 to +71 °C

TYPICAL OPERATING CONDITIONS [1]

Frequency Range	9.305-9.405	GHz
Peak Transmitter Power	10	kW
Transmitter Pulse Width	1.0	μs
Pulse Repetition Rate	1000	pps
Recovery Time	0.5	μs
Breakdown Power	100	mW
Spike Leakage	0.03	erg
Flat Leakage	25	mW
Insertion Loss	0.8	dB
VSWR	1.15:1	

NOTE:

1. General characteristics and operating values are based on performance tests. These figures may change without notice as a result of additional data or product refinement. Consult Varian/Beverly before using this information for final equipment design.

3388 6/75

Printed in U.S.A.

HIGH POWER FILTERS

varian

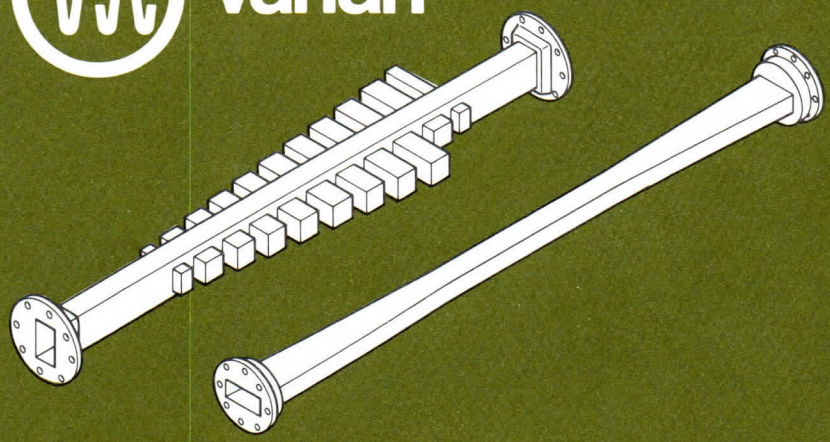

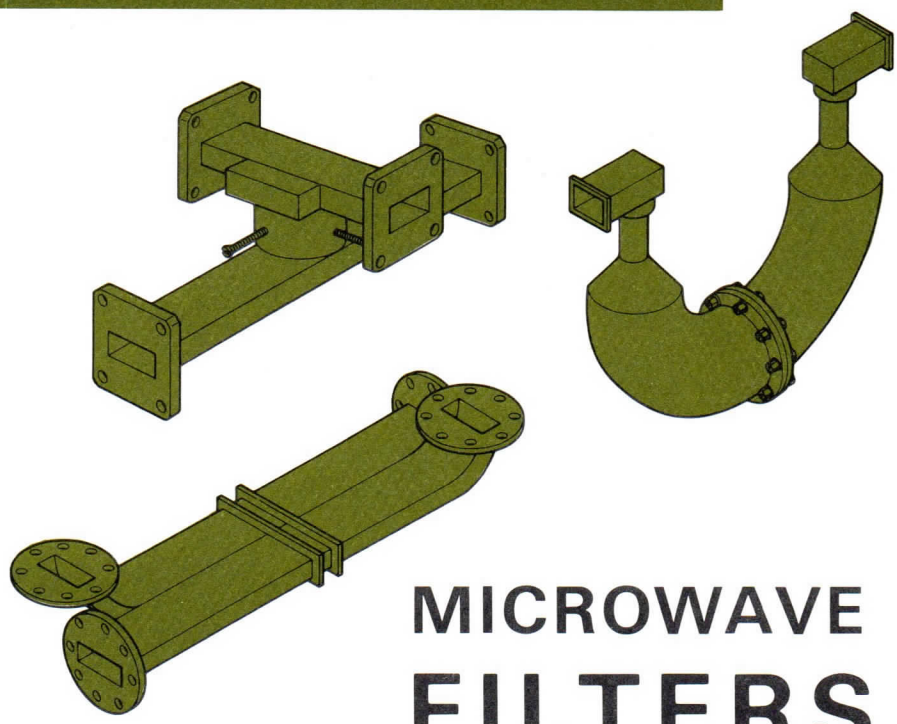

MICROWAVE FILTERS

catalog no. 3

INTRODUCTION

This catalog lists data on microwave filters available from the Varian Microwave Components Operation of the Palo Alto Tube Division. It has been updated to include the many new filters developed during the past several years.

With the microwave area of the spectrum becoming more and more congested the requirement for more sophisticated filters, as retrofits and for original equipment, has increased substantially. System designers are becoming increasingly aware of the need to suppress radio frequency interference (rfi) resulting from the spurious output of high-power microwave transmitters. Filtering at the output of the power amplifier is an obvious and generally effective way to eliminate these rfi problems.

The filters listed in this catalog have proven their performance and reliability in many systems now in the field. Increased activity in satellite communications has led to development of a broad line of both reflective and absorptive filters specifically for this application. In addition, smaller and lighter filters using new methods and techniques have been developed for many tactical radar systems.

The Microwave Components Operation is an integral part of the Varian Palo Alto Tube Division, assuring complete compatibility between filters and the power amplifiers.

In addition to the filters in this catalog, the Microwave Components Operation can design and fabricate filters to particular specifications. We welcome requests for microwave filters to meet special requirements.

varian palo alto tube division
611 hansen way · palo alto, california 94303

CONTENTS

	Page
• Introduction	2
• Characteristic Curves	3
• Explanation of Filter Model Numbers	3
• Bandpass Filters	4
• High Pass Filters	6
• Low Pass CW Harmonic Filters	8
• Low Pass Megawatt Harmonic Filters	10
• Bandstop Filters	12
• High Power Filter Kits	14
• Sales Offices	16

FOUR COMMON TYPES of FILTER CHARACTERISTICS

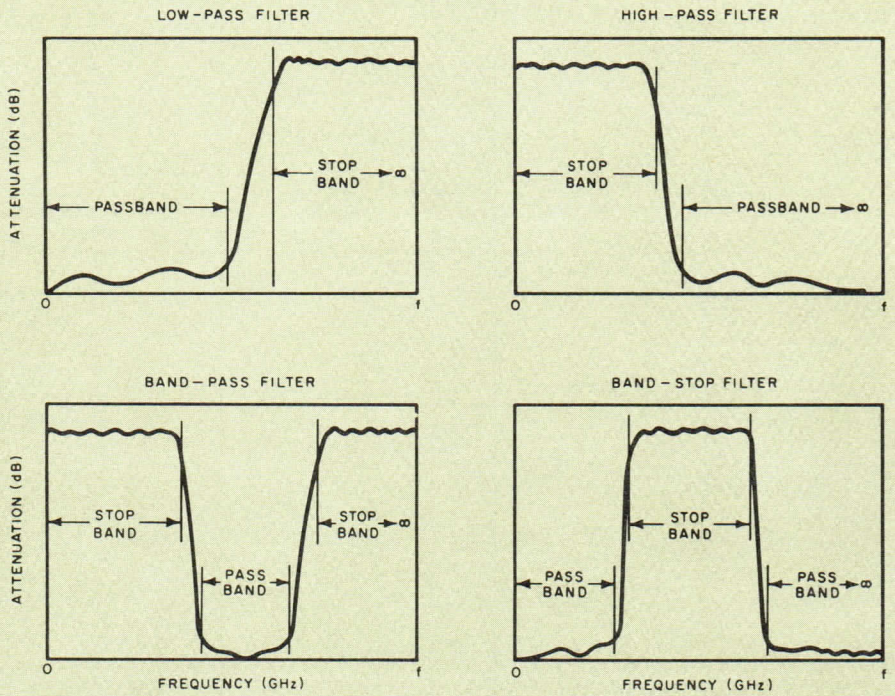

EXPLANATION of FILTER MODEL NUMBERS
Microwave Component Operation

F — Filter

Product Code

F — Filter
L — Load
S — Switch
W — Window
C — Coupler
A — Attenuator
G — Flange

430 — WR430 Waveguide

EIA Waveguide Designation Code

62 — WR62 284 — WR284
90 — WR90 430 — WR430
112 — WR112 650 — WR650
137 — WR137 770 — WR770
187 — WR187 2100 — WR2100

Coax Line Sizes (Per EIA Standards)

C1 — 1-5/8" and 7/8"
C3 — 3-1/8"
C6 — 6-1/8"

Example: **F 430 C A 1**

C — Waffle-Iron. Family designation describing physical characteristics of product.

Family Code

A — Straight leaky wall
B — Spiral leaky wall
C — Waffle-iron
D — Tuned cavity
E — Open periodic
F — Stub tuned
G — Tapered waveguide
H — Combination
J — Stepped Center Cond.
K — Harmonic Pad
L — Coaxial Loop Absorber

A — 100% of full standard rated power level established at time of initial development.

Rated Power Level Code

A — 100% standard rated power
B — 25% standard rated power
C — 50% standard rated power
D — 75% standard rated power
E — 125% standard rated power
F — 150% standard rated power

1 — A specific member of the "430CA" family of filters. Numbers are assigned consecutively starting with 1.

BANDPASS FILTERS

High-power bandpass filters utilize the tuned cavity design and suppress energy on either side of the passband. Since we are concerned only with the TE_{10} mode in the region of the passband, this type of filter cannot be used for harmonic rejection.

The number of cavities that are used in a filter is generally determined by the steepness of the slope close to the passband – the more cavities, the higher the insertion loss and the

	MODEL NUMBER	PASSBAND CHARACTERISTICS					STOPBAND ATTENUATION			
							LOWER STOPBAND		UPPER STOPBAND	
		FREQUENCY RANGE (GHz)	AVG. POWER (kW)	PEAK POWER (MW)	MAX I.L. (dB)	MAX VSWR	FREQUENCY (MHz)	ATTEN. (dB)	FREQUENCY (MHz)	ATTEN. (dB)
L – BAND	F650DA1	1.35 — 1.45	20	10	0.40	1.15	dc — 1320	50	1485 — 1600	50
							1320 — 1330	45	1475 — 1600	45
							1330 — 1340	25	1465 — 1600	25
							1340 — 1345	8	1460 — 1600	8
	F650DA2	1.36 — 1.45	20	10	0.40	1.15	dc — 1340	50	1485 — 1600	50
							1340 — 1347	45	1475 — 1600	45
							1347 — 1350	30	1465 — 1600	25
									1460 — 1600	8
	F650DA5	1.25 — 1.35	4.5	3	0.15	1.25	dc — 1180	50	1430 — 1750	25
							1180 — 1215	25	1470 — 1750	50
	F650DA6	1.25 — 1.35	6	6	0.30	1.30	dc — 1180	70	1480 — 1500	100
							1180 — 1200	60	1450 — 1800	60
							1200 — 1210	50	1430 — 1450	50
							1210 — 1230	15	1380 — 1400	15
S	F430DA1	2.20 — 2.30	20	—	0.50	1.25	2125 — 2155	95	2344 — 2374	85
	F284DA1	2.70 — 2.90	10	2	0.20	1.30	dc — 2590	50	3040 — 3840	25
							2590 — 2640	25	3150 — 3700	50
	F284DA2	2.70 — 2.90	10	5	0.25	1.15	dc — 2590	50	3040 — 3840	25
							2590 — 2640	25	3150 — 3700	50
C	F137DA4	6.385 — 6.405	8	.020	0.50	1.15	dc — 6145	50	6595 — 6645	30
							6145 — 6195	30	6645 — 8500	50
X – BAND	F112DA2	7.95 — 8.05	1.5	—	0.25	1.25	dc — 7307	80	8210 — 10000	30
							7307 — 7700	30		
	F112DA4	7.90 — 8.15	0.05	—	0.35	1.20	dc — 7500	80	8350 — 10000	30
							7500 — 7750	30	8600 — 9450	80
	F112DA5	7.25 — 7.50	0.05	—	0.35	1.20	dc — 6850	70	7650 — 9000	30
							6850 — 7100	30	7900 — 8800	70
	F112DA6	7.22 — 7.27	0.001	—	0.80	1.20	dc — 7175	40	7315 — 10000	40
							7188	30	7304	30
	F112DA7	7.90 — 8.40	12	—	0.50	1.25	dc — 7750	80	8600 — 10000	80
	F112DB2	7.90 — 8.40	0.02	—	0.50	1.25	dc — 7750	80	8600 — 10000	80
KU	F62DA1	16.40 — 16.60	0.20	.001	0.50	1.20	dc — 15700	40	16950 — 17300	20
							15700 — 16050	20	17300 — 18900	40
	F62DA2	14.020	0.005	—	0.75	1.20	13600	60	14440	60

1. *Dry air. Most filters can be used within pressurized waveguide systems. See individual data sheets or inquire as to particulars.*
2. *Convection and radiation cooling uses no blowers.*

larger the phase deviation from linearity. More cavities also increase the length of the filter.

This type of filter is reactive and thus reflects all of the stopband energy back toward its source. By using branching techniques, it is possible to absorb the reflected energy, but this increases the size and cost of the unit. For high peak-power requirements, these devices can be designed to be hermetically sealed for localized pressurization.

MIN[1] OPER. PRESS. (lbf/in²g)	COOLING	APPROX. LENGTH (ft — in)	APPROX. WEIGHT (lb)	MAT'L	FLANGES INPUT	FLANGES OUTPUT
20	C&R[2]	10 — 0	125	AL	CPR-650F	CPR-650F
20	C&R	10 — 0	125	AL	CPR-650F	CPR-650F
5	C&R	4 — 0	20	AL	UG-418	UG-418
5	C&R	8 — 0	60	AL	UG-418	UG-418
—	C&R	4 — 0	20	AL	UG-437	UG-437
30	C&R	3 — 2	20	Cu Alloy	UG-54	UG-53
30	C&R	5 — 2	45	Cu Alloy	UG-54	UG-53
—	LIQ	0 — 6	5	Cu Alloy	UG-343	UG-343
0	C&R	0 — 6	0.4	AL	UG-137	UG-138
0	C&R	0 — 10.5	1	Cu Alloy	CPR-112F	CPR-112F
0	C&R	0 — 10.5	1	Cu Alloy	CPR-112F	CPR-112F
—	C&R	0 — 8	0.5	AL	UG-138	UG-138
—	LIQ	1 — 3	4	Cu Alloy	CPR-112F	CPR-112F
—	C&R	1 — 3	3	Cu Alloy	UG-51	UG-51
—	C&R	0 — 3	0.5	Cu Alloy	UG-419	UG-419
—	C&R	0 — 3	0.5	Cu Alloy	UG-419	UG-419

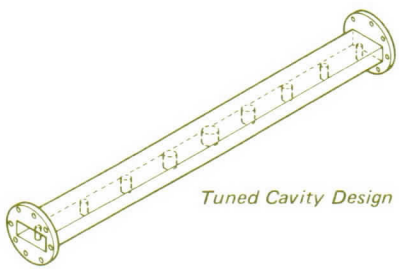

Tuned Cavity Design

Model No. F112DA1

HIGH PASS FILTERS

Suppression of energy in the band immediately below the passband is readily accomplished by using a tapered waveguide design or a tuned resonator design. All frequencies from dc to those just below the passband are attenuated. The tapered waveguide filter consists simply of a reduced width waveguide between two matching transformers. The

	MODEL NUMBER	PASSBAND CHARACTERISTICS					STOPBAND ATTENUATION	
		FREQUENCY RANGE (GHz)	AVG. POWER (kW)	PEAK POWER (MW)	MAX I.L. (dB)	MAX VSWR	FREQUENCY (GHz)	(dB)
S – BAND	F284GA2	2.90 — 3.10	20	3	0.3	1.20	dc — 2.82 2.82 — 2.84 2.84 — 2.85	60 40 25
	F284GA3	2.70 — 2.90	6	6	0.15	1.20	dc — 2.45 2.45 — 2.55 2.55 — 2.60	100 50 10
	F284GA5	2.80 — 2.83	4	5	0.50	1.15	dc — 2.70 2.70 — 2.75	40 50
C – BAND	F187GA1	4.40 — 5.00	2	—	0.20	1.15	dc — 4.22 4.22 — 4.27	60 40
	F187GA2	4.40 — 5.00	50	—	0.20	1.15	dc — 4.22 4.22 — 4.27	60 40
	F137GA2	5.90 — 6.50	2	—	0.25	1.15	dc — 5.65 5.65 — 5.73	60 40
	F137GA3	5.90 — 6.50	50	—	0.25	1.15	dc — 5.65 5.65 — 5.73	60 40
	F137GA4	6.37 — 6.43	8	0.02	0.20	1.15	dc — 5.90 5.90 — 6.10	40 30
X – BAND	F137DA1	7.90 — 8.40	20	—	0.30	1.15	dc — 7.50 7.50 — 7.60 7.60 — 7.70	50 40 30
	F137DA3	7.90 — 8.40	20	—	0.25	1.20	dc — 7.50 7.50 — 7.60 7.60 — 7.70	50 40 30
	F112DA8	7.90 — 8.40	20	—	0.25	1.20	dc — 7.50 7.50 — 7.60 7.60 — 7.70	50 40 30
	F112DA9	8.31 — 8.41	1.5	—	0.25	1.25	7.57 — 7.67	80

1. *Dry air. Most filters can be used within pressurized waveguide systems. See individual data sheets or inquire as to particulars.*
2. *Convection and radiation cooling uses no blowers.*

matching networks are critical and are the key to a good design.

This is a reactive device and, consequently, has a high stopband VSWR. Cavity filters (bandpass design) can also be used as high-pass filters. The lower passband skirt slope is adjustable within limits.

MIN[1] OPER. PRESS. (lbf/in²g)	COOLING	APPROX. LENGTH (ft — in)	APPROX. WEIGHT (lb)	MAT'L	FLANGES INPUT	FLANGES OUTPUT
31	C&R[2]	5 — 0	25	AL	CPR-284F	CPR-284F
30	C&R	4 — 7	8	AL	UG-585	UG-585
30	C&R	4 — 6	15	AL	UG-585	UG-585
0	C&R	3 — 4	6	AL	Optional	Optional
15	LIQ	3 — 4	40	Cu Alloy	Optional	Optional
0	C&R	2 — 6	5	AL	Optional	Optional
15	LIQ	2 — 6	12	Cu Alloy	Optional	Optional
—	C&R	1 — 4	10	Cu Alloy	UG-343	UG-343
10	LIQ	0 — 10	3.5	Cu Alloy	UG-343	UG-344
10	LIQ	0 — 10	3.5	Cu Alloy	CPR-137F	CPR-137F
—	LIQ	0 — 10	4	Cu Alloy	CPR-112F	CPR-112F
—	C&R	0 — 6	0.4	AL	UG-137	UG-138

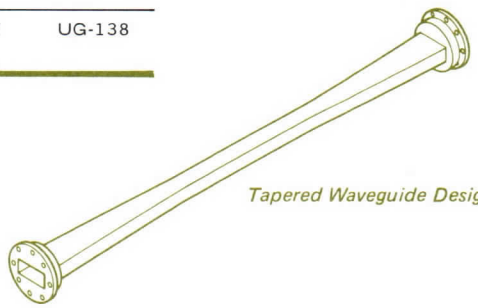

Tapered Waveguide Design

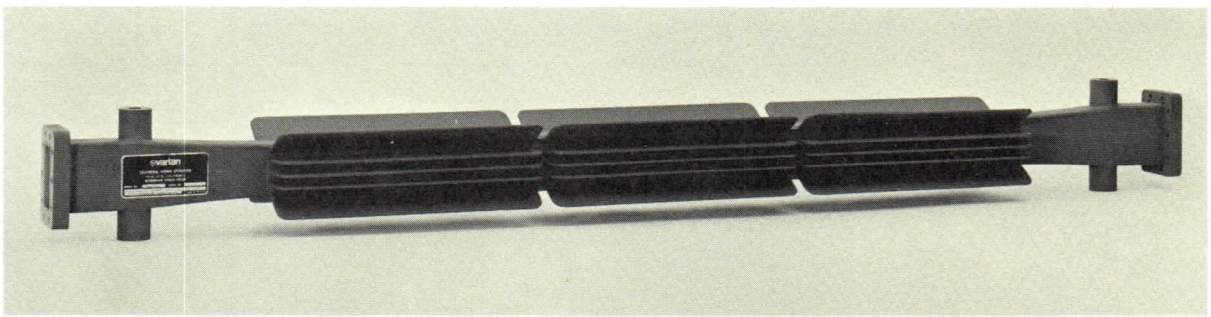

Model No. 284GA2

LOW PASS CW HARMONIC FILTERS

The reflective harmonic filters utilize the waffle-iron design. This type of filter is a low-pass, wide stopband, reactive device, which obtains a stopband by reflecting the harmonic frequencies. The alternating low and high impedance corrugations, plus the reduced height quarter-wave transformers, attenuate the unwanted modes.

	MODEL NUMBER	PASSBAND CHARACTERISTICS FREQUENCY RANGE (GHz)	CW POWER (kW)	MAX I.L. (dB)	MAX VSWR	STOPBAND ATTENUATION 2nd HARM (dB)	3rd HARM (dB)	4th HARM (dB)	5th HARMONIC OR SPECIAL STOPBAND FREQ (GHz)	(dB)
	REFLECTIVE:									
L	F430CA7	1.75 — 2.40	12	0.20	1.35	60	50	40	8.50 — 12.00	30
L	F430CA10	1.75 — 1.85	15	0.15	1.15	55	45	35	—	—
L	F430CA12	1.75 — 1.85	13	0.20	1.20	70	60	40	5th	20
L	F430CA13	1.70 — 2.40	12	0.20	1.35	53	50	40	—	—
L	F430CD1	1.75 — 1.85	2	0.20	1.20	40	—	—	—	—
S	F284CA2	2.50 — 3.50	2	0.30	1.40	40	30	—	—	—
C — BAND	F187CA1	4.40 — 5.00	1.50	0.30	1.20	35	30	—	—	—
C — BAND	F187CA2	4.40 — 5.00	3	0.20	1.20	60	50	40	8.30 — 20.50	30
C — BAND	F187CA3	4.40 — 5.00	12	0.20	1.20	60	50	40	—	—
C — BAND	F187CA4	4.40 — 5.00	12	0.20	1.20	60	50	40	—	—
C — BAND	F187CA5	4.40 — 5.00	1.50	0.20	1.20	50	30	20	—	—
C — BAND	F187CA6	4.40 — 5.00	1	0.20	1.20	40	30	20	—	—
C — BAND	F137CA1	5.925 — 6.425	3	0.20	1.20	50	40	30	—	—
C — BAND	F137CA2	5.925 — 6.425	3	0.20	1.20	50	40	30	—	—
C — BAND	F137CA3	5.850 — 5.925	0.70	0.20	1.05	40	30	—	—	—
X — BAND	F112CA1	7.90 — 8.40	1	0.20	1.25	55	45	35	—	—
X — BAND	F122CA3	7.90 — 8.40	10	0.20	1.25	30	—	—	—	—
X — BAND	F112FA1	7.20 — 7.50	10	0.15	1.15	40	—	—	—	—
X — BAND	F112FA2	7.90 — 8.40	10	0.15	1.15	30	—	—	—	—
X — BAND	F112FA3	7.90 — 8.40	10	0.15	1.20	30	—	—	—	—
X — BAND	F90CA2	8.40 — 8.80	0.50	0.20	1.15	50	35	20	14.00 — 26.20	35
X — BAND	F90CA4	10.00 — 11.00	12	0.20	1.20	45	40	—	—	—
KU	F62CA1	14.00 — 16.00	0.05	0.70	1.20	40	—	—	26.50 — 40.00	40
KU	F62CA2	14.00 — 16.00	0.50	0.40	1.20	40	—	—	26.50 — 40.00	40
	ABSORPTIVE:									
S	F430AA1	1.80 — 2.40	20	0.15	1.10	30	20	10	—	—
C — BAND	F187AA5	4.40 — 5.00	15	0.15	1.15	35	30	—	—	—
C — BAND	F137AA1	5.73 — 8.40	20	0.30	1.15	25	10	—	—	—
C — BAND	F137AA3	5.925 — 6.425	10	0.20	1.20	40	40	—	—	—
C — BAND	F137AA4	5.925 — 6.425	15	0.20	1.20	40	30	—	—	—
C — BAND	F137AA5	5.925 — 6.425	15	0.25	1.15	20	—	—	—	—
C — BAND	F137AA6	5.925 — 6.425	12	0.30	1.20	50	50	40	5th & 6th Harm	25
C — BAND	F137AA7	5.925 — 6.425	8	0.20	1.20	50	40	30	—	—
C — BAND	F137AA8	5.925 — 6.425	5	0.50	1.20	40	30	—	—	—
C — BAND	F137AA9	5.925 — 6.425	10	0.20	1.15	40	40	—	—	—
C — BAND	F137AA10	5.925 — 6.425	8	0.25	1.20	50	50	40	5th & 6th Harm	25
X	F112AA1	7.90 — 8.40	15	0.30	1.20	50	50	40	39.50 — 40.00	30
X	F112AA2	7.90 — 8.40	1.50	0.20	1.25	45	30	15	—	—
X	F112AA3	7.90 — 8.40	10	0.20	1.15	35	20	20	—	—
X	F112AA4	7.90 — 8.40	15	0.30	1.20	50	40	35	39.50 — 40.00	30

1. *Dry air. Most filters can be used within pressurized waveguide systems. See individual data sheets or inquire as to particulars.*
2. *Convection and radiation cooling uses no blowers.*
3. *Forced air.*

For second harmonic filtering only, the stub-tuned design (explained in the bandstop section) can be used.

The absorptive harmonic filters all use the leaky wall approach as explained in the low-pass megawatt pulsed harmonic filter section.

MIN[1] OPER. PRESS. (lbf/in²g)	COOLING	APPROX. LENGTH (ft – in)	APPROX. WEIGHT (lb)	MAT'L	FLANGES INPUT	FLANGES OUTPUT
0	C&R[2]	3 – 2	23	AL	CPR-430F	CPR-430F
0	C&R	1 – 11	18	AL	CPR-430F	CPR-430F
0	C&R	2 – 6	20	AL	UG-437	UG-437
0	C&R	3 – 2	23	AL	UG-435	UG-435
0	C&R	3 – 2	23	AL	UG-435	UG-435
0	C&R	2 – 4	20	AL	CPR-284F	CPR-284F
0	C&R	1 – ¼	2.5	AL	UG-406	UG-407
0	C&R	1 – ¼	2.5	AL	UG-406	UG-406
0	LIQ	1 – ¼	5	AL	UG-149	UG-149
0	LIQ	1 – ¼	8	Cu Alloy	UG-149	UG-149
0	C&R	1 – ¼	3	AL	CPR-187F	UG-406
0	C&R	1 – ¼	2.5	AL	UG-149	UG-149
0	C&R	0 – 8½	2	AL	UG-440	UG-441
0	C&R	0 – 9	2	AL	CPR-137F	CPR-137F
0	C&R	0 – 9	2	AL	UG-344	UG-343
0	C&R	0 – 6½	1	AL	UG-137	UG-138
0	LIQ	0 – 7	5	Cu Alloy	CPR-112F	CPR-112F
0	C&R	0 – 5	2	Cu Alloy	UG-51	UG-51
0	C&R	0 – 8	2.5	Cu Alloy	UG-51	UG-51
0	LIQ	0 – 8	3	Cu Alloy	UG-51	UG-51
0	C&R	0 – 6½	1	AL	UG-135	UG-135
0	LIQ	0 – 6	2	Cu Alloy	CPR-90F	CPR-90F
0	C&R	0 – 4	0.5	Cu Alloy	OSM-204	UG-419
0	C&R	0 – 5	0.75	Cu Alloy	UG-419	UG-419
–	C&R	5 – 5	80	AL	UG-435	UG-435
–	AIR[3]	1 – 6	55	Cu Alloy	UG-149	UG-149
20	LIQ	3 – 0	40	AL	UG-441	UG-441
10	C&R	1 – 6	35	Cu Alloy	CPR-137G	CPR-137G
15	LIQ	1 – 3	35	Cu Alloy	CPR-137F	CPR-137F
10	LIQ	0 – 10	20	Cu Alloy	CPR-137G	CPR-137G
15	LIQ	1 – 6	35	Cu Alloy	CPR-137F	CPR-137F
2	C&R	1 – 6	32	Cu Alloy	CPR-137F	CPR-137F
30	C&R	1 – 3	6	AL	UG-441	UG-441
10	C&R	1 – 6	25	Cu Alloy	UG-343	UG-343
15	C&R	1 – 6	35	Cu Alloy	UG-343	UG-343
10	LIQ	1 – 7	30	Cu Alloy	CPR-112F	CPR-112F
0	C&R	1 – 0	3	AL	UG-138	UG-138
10	LIQ	0 – 10	5	AL	CPR-112F	CPR-112F
10	LIQ	1 – 8	30	Cu Alloy	CPR-112F	CPR-112F

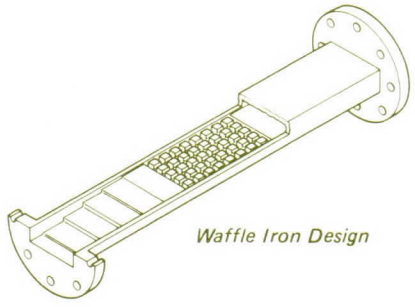

Waffle Iron Design

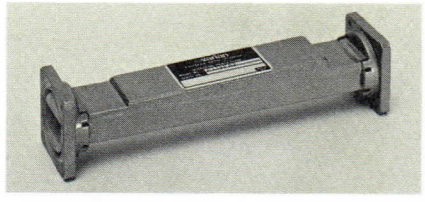

Model No. F112FA2

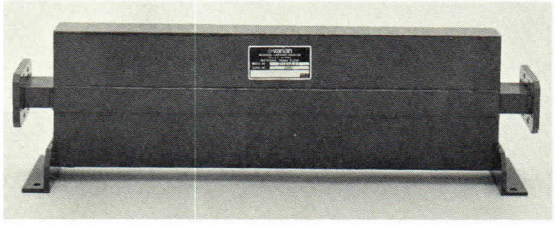

Model No. F137AA7

Model No. F187CA2

LOW PASS MEGAWATT PULSED HARMONIC FILTERS

Almost all low-pass megawatt pulsed harmonic filters use the leaky wall design to obtain the harmonic absorption. The leaky wall filter consists of a primary waveguide to which numerous secondary waveguides are attached. Each of the secondary waveguides is connected to the walls of the primary waveguide by means of a coupling

	MODEL NUMBER	PASSBAND CHARACTERISTICS: FREQUENCY RANGE (GHz)	AVG PWR (kW)	PEAK PWR (MW)	MAX I.L. (dB)	MAX VSWR	STOPBAND ATTENUATION: 2nd HARM (dB)	3rd HARM (dB)	4th HARM (db)	5th HARMONIC OR SPECIAL STOPBAND FREQ (GHz)	(dB)
UHF	VFP-8422	0.400 — 0.450	170	30	0.05	1.10	—	—	—	7th Harmonic	10
	F2100AA1	0.400 — 0.450	300	10	0.10	1.15	20	30	30	—	—
	F2100AA2	0.400 — 0.450	100	30	0.10	1.15	30	30	25	—	—
	F2100AA3	0.400 — 0.450	300	10	0.10	1.20	20	10	5	—	—
	F2100AA4	0.356 — 0.380	100	5	0.20	1.10	40	30	—	—	—
	F2100AA5	0.430 — 0.440	100	20	0.10	1.10	20	20	20	2.00 — 2.25	10
	F975AA1	0.755 — 0.985	100	10	0.15	1.15	30	10	—	—	—
L — BAND	F770AA1	1.25 — 1.35	150	30	0.15	1.10	40	20	—	—	—
	F770AA2	1.25 — 1.35	150	3	0.20	1.15	50	50	25	—	—
	F770BA1	1.25 — 1.35	50	3	0.30	1.20	—	20	50	5th — 7th Harmonic	70
	F650AA1	1.25 — 1.35	75	16.5	0.15	1.15	45	30	20	—	—
	F650AA2	1.35 — 1.45	20	10	0.40	1.15	60	60	30	6.75 — 7.25	20
	F650AA3	1.25 — 1.35	4.5	3	0.20	1.20	—	60	—	—	—
	F650AA4	1.25 — 1.35	75	20	0.15	1.15	50	20	—	—	—
	F650AA5	1.30 — 1.40	20	20	0.15	1.15	50	10	5	—	—
	F650AA6	1.25 — 1.50	20	20	0.15	1.15	—	50	20	6.25 — 7.50	15
	F650AA7	1.25 — 1.45	20	20	0.40	1.15	70	70	50	2.50 — 12.00	20
	F650AA8	1.25 — 1.35	100	20	0.15	1.15	25	10	5	—	—
	F650AA12	1.25 — 1.35	9.75	3.25	0.10	1.18	—	80	—	3.50 — 4.50	60
	F650AL2	1.254 — 1.386	300	5	0.10	1.10	40	30	5	—	—
	F650BA1	1.25 — 1.35	4	4	0.30	1.20	—	—	—	4.00 — 5.40	20
										5.40 — 5.90	50
										8.30 — 9.30	70
	F650CA2[4]	1.28 — 1.35	4.5	1	0.15	1.15	50	40	30	—	—
	F650HA4	1.28 — 1.35	4.5	3	0.25	1.20	60	60	60	5th Harmonic	30
	F650HA5	1.30 — 1.38	200	5	0.25	1.15	59	59	30	5th Harmonic	15
	F650HA6	1.25 — 1.35	5	3	0.25	1.20	60	60	60	4.40 — 5.00	70
	F650HA8[4]	1.25 — 1.35	10	5	0.80	1.70	50	50	50	2.50 — 13.70	50
S — BAND	F430HA1	2.10 — 2.12	500	0.5	0.10	1.05	60[5]	60[5]	4	5th Harmonic	40[5]
	F284AA1	2.60 — 3.10	9.9	3	0.15	1.15	50	35	—	—	—
	F284AA3	3.10 — 3.60	12	4	0.15	1.10	50	15	—	—	—
	F284AA4	2.65 — 3.10	11	5	0.15	1.15	40	15	—	—	—
	F284AA5	2.70 — 2.90	6	6	0.15	1.10	40	30	10	3.50 — 14.50	7
	F284AA6	2.70 — 2.90	6	6	0.10	1.10	—	45	18	—	—
	F284AA7	3.10 — 3.50	1	1	0.20	1.20	40	15	5	—	—
	F284AA8	3.10 — 3.50	10	2	0.20	1.25	40	20	—	—	—
	F284AA9	2.80 — 3.50	1	1	0.20	1.20	40	15	5	—	—
	F284AA10	2.985 — 3.015	8	0.24	0.12	1.10	50	30	—	5.70 — 9.10	30
	F284AA11	2.85 — 3.15	8	5	0.15	1.15	40	15	—	—	—
	F284AA12	2.85 — 3.15	8	5	0.15	1.15	40	15	—	—	—
	F284AA13	3.10 — 3.50	1	1	0.20	1.20	40	15	5	—	—
	F284AA14	3.10 — 3.50	1	1	0.20	1.20	40	15	5	—	—
	F284AL3	3.10 — 3.60	30	10	0.15	1.15	50	15	10	—	—
	F284AL4	3.10 — 3.50	300	5	0.10	1.10	40	15	—	—	—
	F284BA1	3.18 — 3.22	5	3	0.40	1.15	—	50	50	6th & 7th Harmonic	50
C	F187AA2	5.10 — 6.00	20	5	0.15	1.15	40	15	—	12.00 — 15.00	25
	F187AA3	5.40 — 5.90	1	1	0.20	1.20	30	15	—	11.80 — 16.20	15
	F187AA4	4.90 — 5.10	1	1	0.20	1.20	30	15	—	10.20 — 14.70	15
	F187AA6	4.90 — 5.10	1.5	1.5	0.20	1.20	30	15	—	10.20 — 14.70	15
	F187AA7	5.40 — 5.90	10	5	0.15	1.15	30	20	20	—	—
	F187AA8	5.40 — 5.90	10	5	0.15	1.15	30	20	20	—	—

1. *Dry air. Most filters can be used within pressurized waveguide systems. See individual data sheets or inquire as to particulars.*
2. *Convection and radiation cooling uses no bloers.*
3. *E-Plane Bend*
4. *Reflective waffle iron filter.*
5. *TE 10 mode only.*
6. *SF_6.*

aperture and is terminated in a wide-band matched load. At frequencies in the filter's passband, the secondary waveguides are cut off and the desired energy in the transmission line passes to the output unattenuated. At frequencies in the stopband, the undesired energy is coupled into the absorbing waveguide where it is dissipated.

MIN[1] OPER. PRESS. (lbf/in²g)	COOLING	APPROX. LENGTH (ft — in)	APPROX. WEIGHT (lb)	MAT'L	FLANGES INPUT	FLANGES OUTPUT	NOTES
0	C&R[2]	3 — 0[3]	100	AL	CPR-2100	CPR-2100	
0	C&R	13 — 10	1200	AL	CPR-2100	CPR-2100	2 Sections
0	C&R	20 — 9	1600	AL	CPR-2100	CPR-2100	3 Sections
0	C&R	7 — 0	600	AL	CPR-2100	CPR-2100	1 Section
0	C&R	13 — 4	1100	AL	CPR-2100	CPR-2100	
0	C&R	13 — 10	1400	AL	CPR-2100	CPR-2100	2 Sections
0	C&R	6 — 0	250	AL	CPR-975	CPR-975	
20	C&R	7 — 0	200	AL	CPR-770	CPR-770	
20	C&R	14 — 0	250	AL	CPR-770	CPR-770	2 Sections
20	C&R	4 — 6	250	AL	CPR-770	CPR-770	Spiral Filter
20	C&R	7 — 0	260	AL	UG-418	UG-418	
20	C&R	14 — 0	490	AL	UG-418	UG-418	2 Sections
5	C&R	6 — 0	100	AL	UG-418	UG-418	
30	LIQ	8 — 0	250	AL	UG-418	UG-418	
20	C&R	7 — 0	260	AL	UG-418	UG-418	
20	C&R	7 — 0	210	AL	UG-418	UG-418	
20	C&R	21 — 0	750	AL	UG-418	UG-418	3 Sections
20	C&R	4 — 0	60	AL	CPR-650	CPR 650	
5	C&R	4 — 0	60	AL	UG-418	UG-418	
30	LIQ	7 — 0	400	AL	CPR-650F	CPR-650F	
30	C&R	4 — 0	250	AL	UG-418	UG-418	Spiral Filter
0	C&R	3 — 0	40	AL	CPR-650	CPR-650	
5	C&R	8 — 0	175	AL	UG-418	UG-418	2 Sections
5	LIQ	14 — 0	650	AL	Special	Special	2 Sections
20	C&R	10 — 0	180	AL	UG-418	UG-418	3 Sections
30	C&R	—	—	AL	CPR-650F	CPR-650F	2 Sections
0	LIQ	5 — 6	1000	CuAlloy	Special	Special	2 Sections
30	C&R	3 — 0	40	AL	UG-585	UG-584	
20	C&R	4 — 7	50	AL	UG-585	UG-585	
35	C&R	2 — 11	40	AL	Special	Special	
30	C&R	4 — 7	80	AL	UG-585	UG-585	
30	C&R	4 — 7	60	AL	UG-585	UG-585	
15	C&R	4 — 7	60	AL	UG-584	UG-585	
20	C&R	4 — 7	60	AL	UG-585	UG-585	
15	C&R	4 — 7	60	AL	UG-584	UG-585	
15	C&R	3 — 0	40	AL	UG-584	UG-584	
30	C&R	2 — 9.5	20	AL	Special	Special	
30	C&R	2 — 10.5	20	AL	Special	Special	
15	C&R	4 — 7	60	AL	UG-584	UG-585	
15	C&R	4 — 7	60	AL	UG-584	UG-585	
35[6]	LIQ	4 — 6	65	AL	Special	Special	
30	LIQ	3 — 0	70	CuAlloy	Special	Special	
30	C&R	2 — 1	60	AL	UG-585	UG-585	Spiral Filter
60	C&R	3 — 0	40	AL	UG-407	UG-406	
15	C&R	3 — 0	45	AL	UG-407	UG-406	
15	C&R	3 — 0	45	AL	UG-407	UG-406	
15	C&R	3 — 0	45	AL	UG-407	UG-406	
30[6]	C&R	2 — 0	65	CuAlloy	UG-149	UG-149	
30[6]	C&R	2 — 0	16	AL	CPR-187F	CPR-187F	

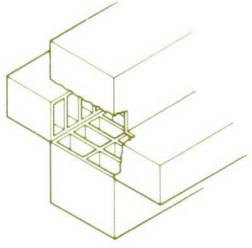

Leaky Wall Design

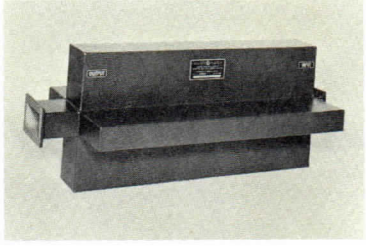

Model No. F650AA8

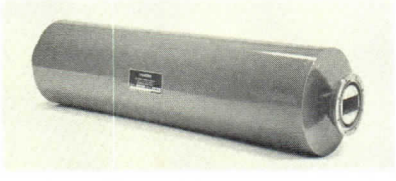

Model No. F284AA1

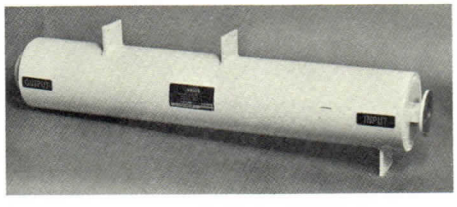

Model No. F187AA3

BANDSTOP FILTERS

All of the bandstop filters listed in this catalog utilize the stub-tuned design. This filter concists of a series of E-plane T-junctions in which the shorted secondary waveguides or cavities coupled to the main waveguide are cut off for the fundamental. The desired energy passes through the filter unaffected, while the undesired energy is reflected by the high

		PASSBAND CHARACTERISTICS					STOPBAND ATTENUATION	
	MODEL NUMBER	FREQUENCY RANGE (GHz)	AVG. POWER (kW)	PEAK POWER (mW)	MAX I.L. (dB)	MAX VSWR	FREQUENCY (GHz)	(dB)
S – BAND	F284FA2	2.7 — 2.9	6	6	0.10	1.10	3.10 — 3.15	10
							3.15 — 3.80	30
							3.20 — 3.25	50
							3.25 — 3.70	70
	F284FA3	2.985 — 3.015	8	0.24	0.15	1.10	2.60	30
							4.10	50
	F284FA4	2.9 — 3.10	20	3	0.10	1.20	3.25	10
							3.35 — 3.80	60
							3.80 — 4.00	30
	F284FA5	2.7 — 2.9	4	5	0.20	1.15	4.4 — 5.0	60
X	F112FA1	7.2 — 7.5	10	—	0.15	1.15	14.40 — 15.00	40
	F112FA3	7.9 — 8.4	10	—	0.15	1.20	15.8 — 16.8	30
KU	F62FA1	15.5 — 16.5	0.001	—	0.7	1.20	17.5 — 19.5	30

1. *Dry air. Most filters can be used within pressurized waveguide systems. See individual data sheets or inquire as to particulars.*
2. *Convection and radiation cooling using no blowers.*
3. *Forced air.*

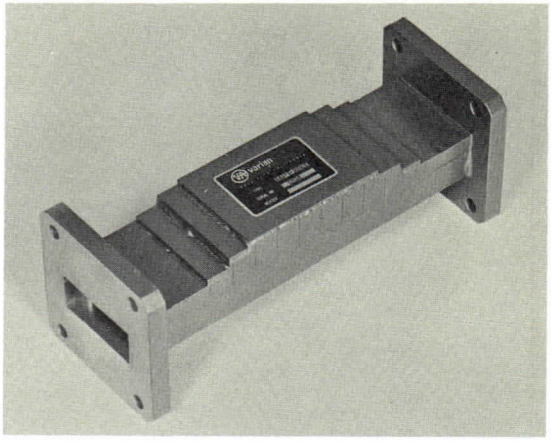

Model No. F112FA1

series reactance.

Stub-tuned — or T-junction filters as they are sometimes called — can be designed to handle almost the full terminating waveguide power in the passband. These filters are relatively small, inexpensive and have good high-power capability.

MIN[1] OPER. PRESS. (lbf/in²g)	COOLING	APPROX LENGTH (ft - in.)	APPROX WEIGHT (lb)	MAT'L	FLANGES INPUT	FLANGES OUTPUT
30	C&R[2]	2 — 0	4.5	AL	UG-585	UG-585
0	C&R	1 — 0	4	AL	UG-584	UG-584
30	C&R	1 — 8	7	AL	Special	Special
32	C&R	5 — 0	30	AL	UG-584	UG-584
0	AIR[3]	0 — 5	3	CU Alloy	UG-51	UG-51
0	LIQ	0 — 8	3	CU Alloy	UG-51	UG-51
0	C&R	0 — 3	1	CU Alloy	UG-419	UG-419

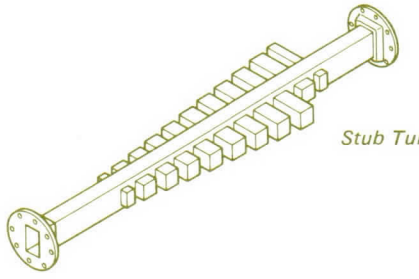

Stub Tuned Design

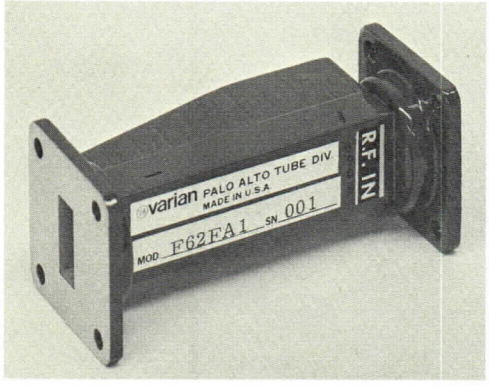

Model No. F62FA1

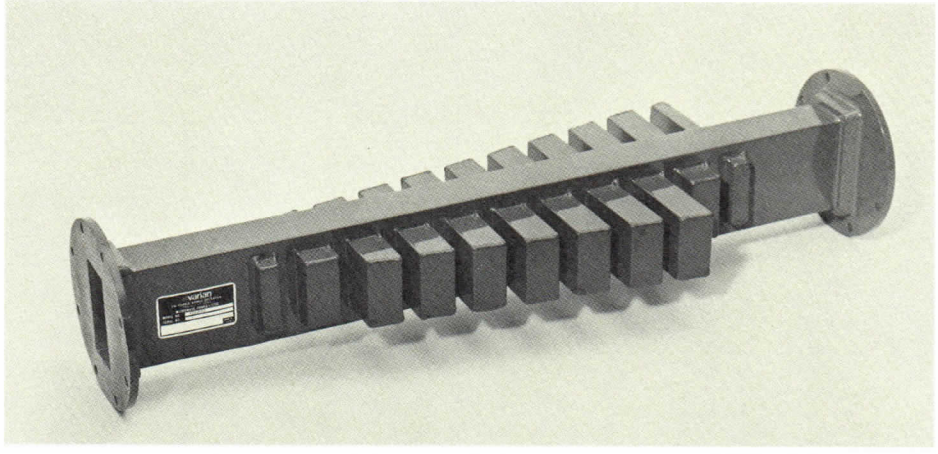

Model No. F284FA2

COAXIAL HARMONIC FILTERS

Varian offers two types of high-power coax filters. The first of these is the reflective type and consists of the conventional high and low impedance sections in series. When properly designed, it will produce the correct values of inductance and capacitance to give a low pass characteristic. These filters are relatively inexpensive to fabricate and have low

	MODEL NUMBER	PASSBAND CHARACTERISTICS: FREQUENCY RANGE (GHz)	AVG. POWER (kW)	PEAK POWER (MW)	MAX I.L. (dB)	MAX VSWR	STOPBAND CHARACTERISTICS: 2nd HARM (dB)	3rd HARM (dB)	4th HARM (dB)	5th HARM (dB)
	REFLECTIVE:									
S	FC1JA1	2.7 — 2.9	0.5	0.5	0.2	1.10	40	20	20	—
UHF	FC1DA1[3]	0.60 — 0.65	0.05	0.5	0.3	1.3	60	60	—	—
UHF	FC3JA1	0.82 — 0.89	2	1	0.20	1.20	40	30	30	30
UHF	FC3JA2	0.39 — 0.46	9	1	0.15	1.20	30	30	30	30
UHF	FC3JA3	0.470 — 0.584	10	—	0.15	1.10	40	35	40	40
UHF	FC3JA4	0.578 — 0.716	10	—	0.15	1.10	40	35	40	40
UHF	FC3JA5	0.4 — 0.45			0.15	1.15	20	40	40	—
	ABSORPTIVE:[5]									
L	FC1HA1	1.215 — 1.365	0.36	0.0225	0.2	1.20	60	50	50	50
UHF	FC3HA5	0.4 — 0.45	3.0	1.5	0.15	1.15	40	40	40	40
UHF	FC3HA5[4]	0.4 — 0.45	3.0	1.5	0.15	1.15	20	40	40	40
UHF	FC3HA6	0.4 — 0.45	10.0	0.200	0.15	1.15	40	40	40	40

1. *Dry air. Most filters can be used within pressurized waveguide systems. See individual data sheets or inquire as to particulars.*
2. *Convection and radiation cooling uses no blowers.*
3. *60 dB attenuation from dc to 350 MHz and 60 dB from 900 to 2000 MHz.*
4. *40 dB attenuation through 8th harmonic.*
5. *Only absorptive for 2nd and 3rd harmonics.*

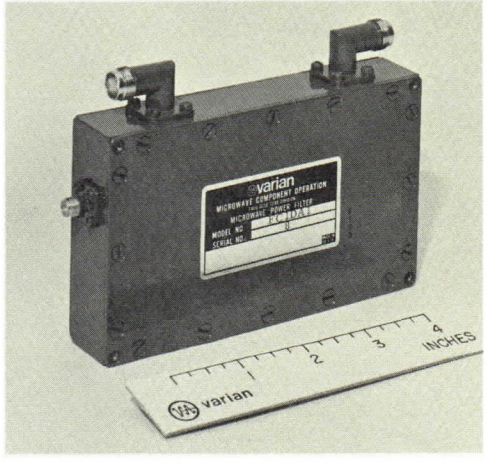

Model No. FC1DA1

VSWR and insertion loss in the passband while producing high loss at the harmonics.

The other type is the absorptive, coaxial harmonic filter. Varian has made a major breakthrough in this area by developing a technique that offers harmonic VSWR of less than 3:1 with less than 0.15 dB passband loss.

MIN[1] OPER. PRESS. (lbf/in² g)	COOLING	APPROX LENGTH (ft – in.)	APPROX WEIGHT (lb)	MAT'L	LINE SIZE (EIA)	IMPED. (ohms)	FLANGES EIA RS-225 INPUT	FLANGES EIA RS-225 OUTPUT
0	C&R[2]	1 – 5	10	CU Alloy	7/8	50	UG-45	UG-46
0	C&R	0 – 5	1	AL	—	50	TNC	TNC
25	C&R	1 – 3.5	15	CU Alloy	3-1/8	50	Swivel	Swivel
30	C&R	2 – 0	20	CU Alloy	3-1/8	50	Swivel	Swivel
0	C&R	2 – 0	16	CU Alloy	3-1/8	50	Swivel	Swivel
0	C&R	2 – 0	16	CU Alloy	3-1/8	50	Swivel	Swivel
15	C&R	2 – 0	10	AL	3-1/8	50	Swivel	Swivel
0	C&R	0 – 10	1.0	CU Alloy	7/8	50	Swivel	Swivel
15	C&R	3 – 0	30	CU Alloy	3-1/8	50	Swivel	Swivel
15	C&R	2 – 0	10	AL	3-1/8	50	Swivel	Swivel
15	C&R	3 – 0	30	CU Alloy	3-1/8	50	Swivel	Swivel

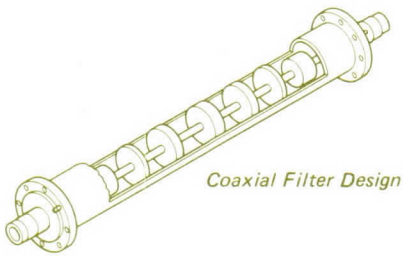

Coaxial Filter Design

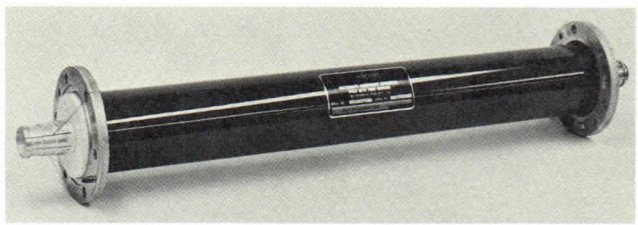

Model No. FC3JA2

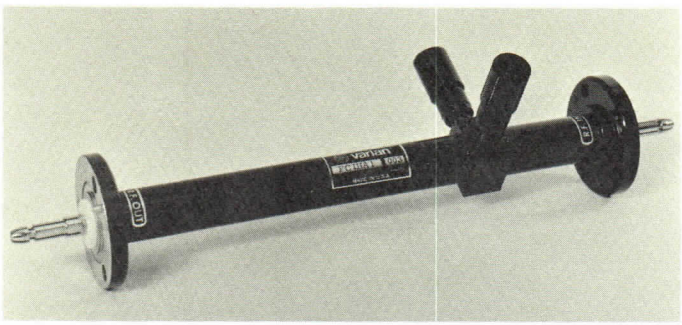

Model No. FC1HA1

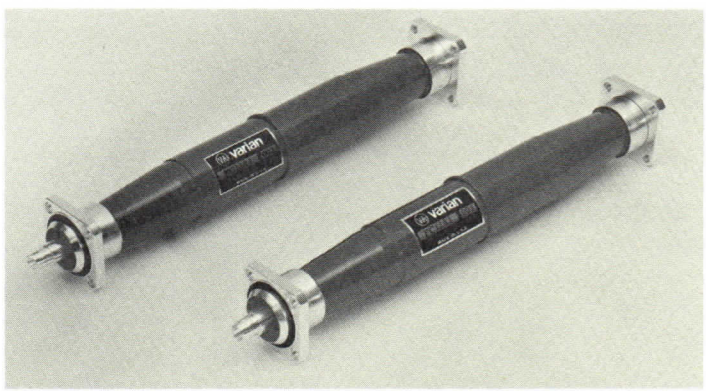

Model No. FC1JA1

varian electron tube and device group

U.S. SALES OFFICES

Atlanta
180 Allen Road, N.W.
Suite 202
Atlanta, Georgia 30328
TEL: (404) 252-0045

Clearwater Branch
314 South Missouri
Suite 205
Clearwater, Fla. 33516
TEL: (813) 446-8513

Boston
400 Wyman Street
Waltham, Mass. 02154
TEL: (617) 890-4560

Chicago
Executive Plaza Office Building
205 W. Touhy Avenue
Park Ridge, Illinois 60068
TEL: (312)825-6686

Dallas
Richardson Savings & Loan Bldg.
P. O. Box 689
558 S. Central Expressway
Suite 202
Richardson, Texas 75080
TEL: (214) 235-2385

Dayton
Southmoor Building
10 Southmoor Circle
Dayton, Ohio 45429
TEL: (513) 298-7318

Los Angeles
2901 Wilshire Boulevard
Suite 102
Santa Monica, Calif. 90403
TEL: (213) 828-5588

New York
25 Route 22
Springfield, New Jersey 07081
TEL: (201) 376-6600

Philadelphia
P.O. Box 256
1500 Kings Highway
Cherry Hill, N.J. 08002
TEL: (609) 428-6800

Phoenix
7117 Third Avenue
Suite 106
Scottsdale, Arizona 85251
TEL: (602) 947-5461

Albuquerque Branch
7100 Shoshone Rd. NE
Albuquerque, N.Mex. 87110
TEL: (505) 296-1248

San Francisco
4940 El Camino Real
Los Altos, Calif. 94022
TEL: (415) 968-7630

Syracuse
113 Twin Oaks Drive
Syracuse, New York 13206
TEL: (315) 437-2568

Washington, D.C.
4701 Lydell Drive
Cheverly, Maryland 20781
TEL: (301) 773-7010

INTERNATIONAL SALES OFFICES

Australia
Varian Pty. Ltd.
38 Oxley Street
Crows Nest
2065 New South Wales, Australia
TEL: 430-673

Varian Pty. Ltd.
679 Springvale Road
North Springvale, VICT. 3171
TEL: 560-7133

Benelux
Varian Benelux N.V.
Maassluisstraat 100
P.O. Box 9158
Amsterdam, Holland
TEL: (020) 15 94 10

Brazil
Varian Industria e Comercio Ltda.
Alameda Lorena 1834 ZC 5
Cerqueira Cesar
Sao Paulo, -SP-Brazil
TEL: 80-80-27

Canada
Varian Associates of Canada Ltd.
45 River Drive
Georgetown, Ontario, Canada
TEL: (416) 877-6901

France
Varian S.A.
Quartier de Courtaboeuf
Boite Postale No. 12
91 Orsay
France
TEL: 920-83-12

Germany
Varian GmbH
Breitwiesenstrasse 9
7 Stuttgart-Vaihingen
Germany
TEL: (0711) 73 20 28

Italy
Varian SpA
Via Varian
10040 Leini (Torino)
Italy
TEL: (02) 26 80 86

Japan
Marubun Co., Ltd.
1,2-Chome, Odemmacho
Nihombashi, Chuo-Ku
Tokyo, Japan
TEL: 662-8151

Scandinavia
Varian AB
Skytteholmsvägen 7D
P.O. Box 1099
Solna 1, Sweden
TEL: (08) 82 00 30

Switzerland
Varian AG
Steinhauserstrasse
6300 Zug, Switzerland
TEL: (042) 23 25 75

United Kingdom and Ireland
EMI-Varian Ltd.
Blyth Road
Hayes
Middlesex
England
TEL: 01-573 5555

PUB. 2783 Printed in U.S.A.

varian
palo alto tube division

TECHNICAL DATA

F112AA1

HIGH POWER MICROWAVE FILTER

DESCRIPTION

The F112AA1 is a straight leaky-wall, absorptive harmonic filter for use with high-power military satellite communication transmitters requiring optimum spurious harmonic-energy suppression. It can handle an average power of 15 kilowatts between 7.9 and 8.4 gigahertz. Insertion loss is less than 0.3 decibel; second and third harmonic attenuation is at least 50 decibels. For best performance, the filter should be installed near the transmitting tube in the waveguide transmission line between the tube and antenna. This filter consists of a primary waveguide and arrays of terminated secondary waveguides mounted along the primary waveguide walls. The primary waveguide serves as the high-power bandpass element; the secondary waveguide terminations absorb the harmonic signals. Sturdy furnace-braze construction assures reliable, long-life performance. Modified versions can be supplied to meet special requirements.

GENERAL CHARACTERISTICS

ELECTRICAL

Passband Frequency Range	7.9 to 8.4 GHz
Power Handling, CW	15 kW
Insertion Loss, max[1]	0.3 dB
Passband VSWR, max	1.2:1
Stopband Attenuation, min[2]	
2nd Harmonic	50 dB
3rd Harmonic	50 dB
4th Harmonic	40 dB
5th Harmonic[4]	30 dB
Harmonic Power Absorption, Below passband power level	30 dB

NOTES:

1. Measured in the TE_{10} mode.
2. Measured in the TE_{10} and TE_{01} modes.
3. Other finishes are available on special order.
4. Measured to 40 GHz.

PHYSICAL

Dimensions	See Outline Drawing
Weight, approx	30 lb
Operating and Mounting Position	Any
Waveguide Size	WR112
RF Flanges	Mate with CPR112F
Standard Finishes[3]	
Exterior Surface	Red Copon Epoxy
Waveguide Pressurization	10 lbf/in^2g
Cooling	Water or ethylene glycol/water mixture
Coolant Flow, min	0.5 gal/min
Temperature Range	
Operating	-30 to +55 °C
Non-operating and Storage	-30 to +55 °C

2824 6/72

Printed in U.S.A.

CHARACTERISTIC CURVE

Typical performance values

ATTENUATION CHARACTERISTICS

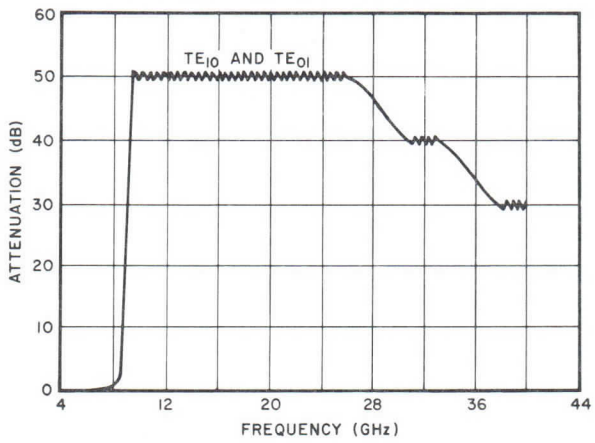

OUTLINE DRAWING

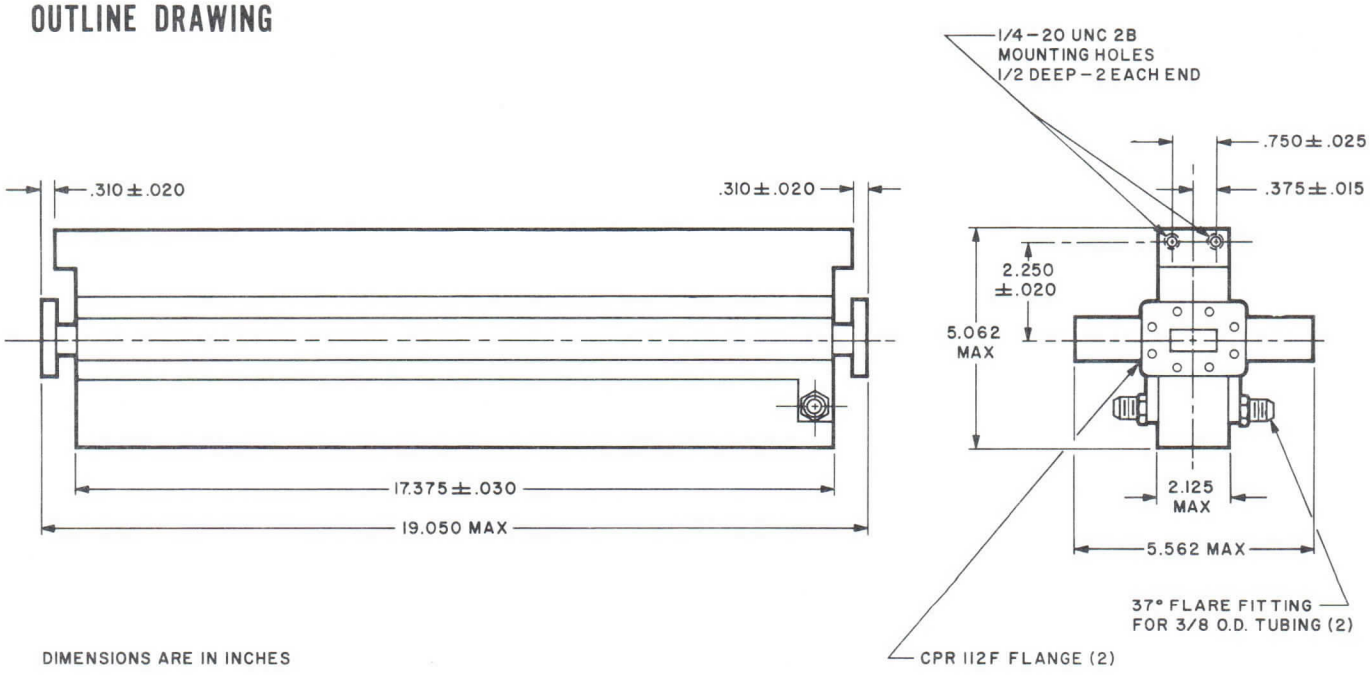

DIMENSIONS ARE IN INCHES

varian

PRELIMINARY
TECHNICAL DATA

F112CA12
F112CA13
HIGH POWER MICROWAVE FILTERS
7.9-8.4 GHz

DESCRIPTION

The F112CA12 and F112CA13 are low-pass, wide stopband filters for use in high power CW transmitters operating between 7.9 and 8.4 gigahertz. The basic filter can be operated at either 5 kilowatts or 10 kilowatts depending upon whether forced-air cooling or water cooling is provided. The filters achieve harmonic rejection by reflection of the unwanted rf power. Insertion loss is less than 0.2 dB. The second harmonic attenuation is down 50 dB, while the third harmonic is at least 40 dB, and the fourth harmonic is down 30 dB or more. For best performance, the filter should be mounted immediately after the ferrite isolator located near the output section of the high power amplifier tube.

These reactive type filters use variable impedance waveguides and are referred to as waffle iron filters due to their filter element appearance. Sturdy, dip-brazed casting construction assures reliable long-life performance in most environments. Modified versions using different flanges or insertion lengths can be supplied to meet special requirements.

GENERAL CHARACTERISTICS[1]

ELECTRICAL

Passband Frequency Range	7.9 to 8.4 GHz
Power Handling, CW, max	
F112CA12	10 kW
F112CA13	5 kW
Insertion Loss, max	0.2 dB
Passband VSWR, max	1.2:1
Stopband Attenuation, min	
2nd Harmonic	50 dB
3rd Harmonic	40 dB
4th Harmonic	30 dB

PHYSICAL

Dimensions	See Outline Drawings
Weight, max	1.5 lb/681 g
Mounting Position	Any
Coolant Flow	
F112CA12, liquid[2]	1 gal/min(0.06 l/s)
F112CA13, forced air	50 ft^3/min(23.5 l/s)
Flanges	See Outline Drawings
Waveguide Pressure, dry air or equivalent[3]	
Operating	0.5 lbf/in^2 (0.035 kgf/cm^2)
Operating Temperature, approx	
F112CA13	145 °C
Finish, exterior	Optional

NOTES:

1. Characteristics are based on performance tests. The values may change without notice as a result of additional data or product refinement. Consult the Palo Alto Microwave Tube Division, Microwave Components Operation before using this information for final equipment design.
2. The operating pressure of the coolant system should not exceed 125 lbf/in^2g (8.8 kgf/cm^2g).
3. The waveguide is pressure tested to 5 lbf/in^2g (0.35 kgf/cm^2g) at the factory. Although not required, 0.5 lbf/in pressure is recommended, to keep the waveguide interior clean and dry.

3630 1/77

Printed in U.S.A.

CHARACTERISTIC CURVES

Typical performance values

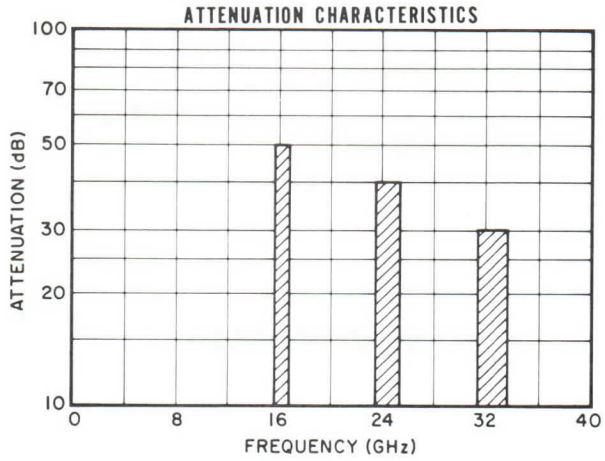

OUTLINE DRAWINGS

F112CA12

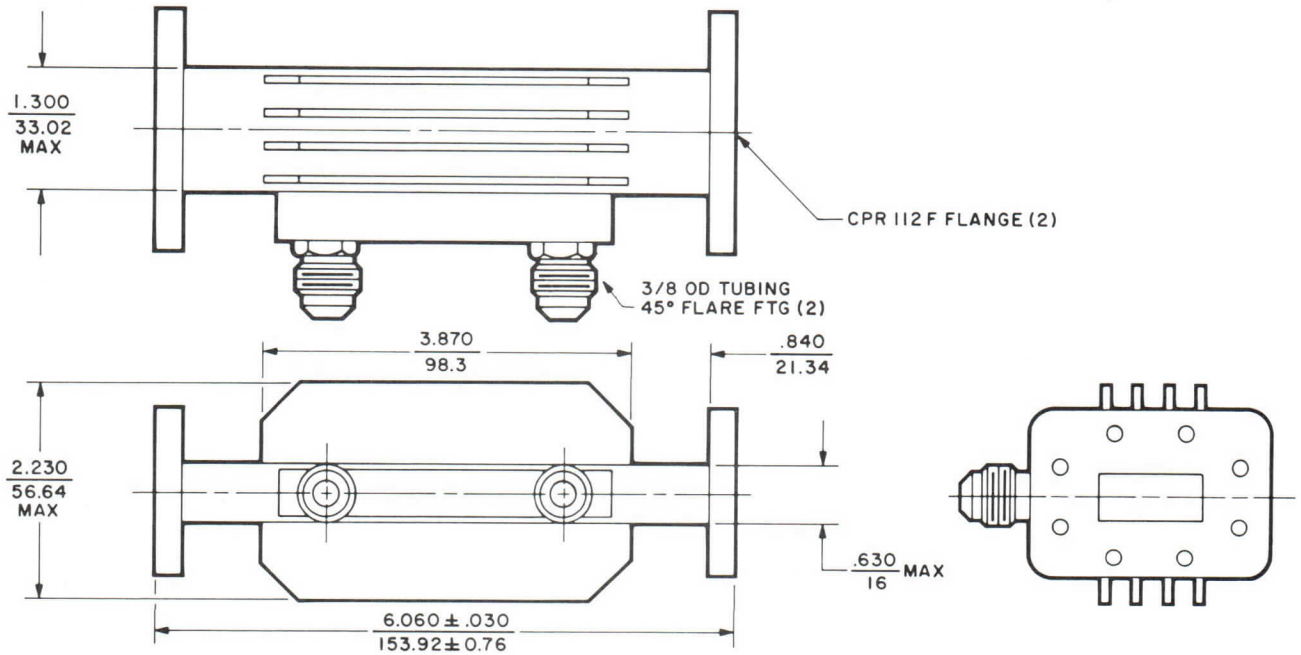

F112CA13

DIMENSIONS: ← inch / mm →

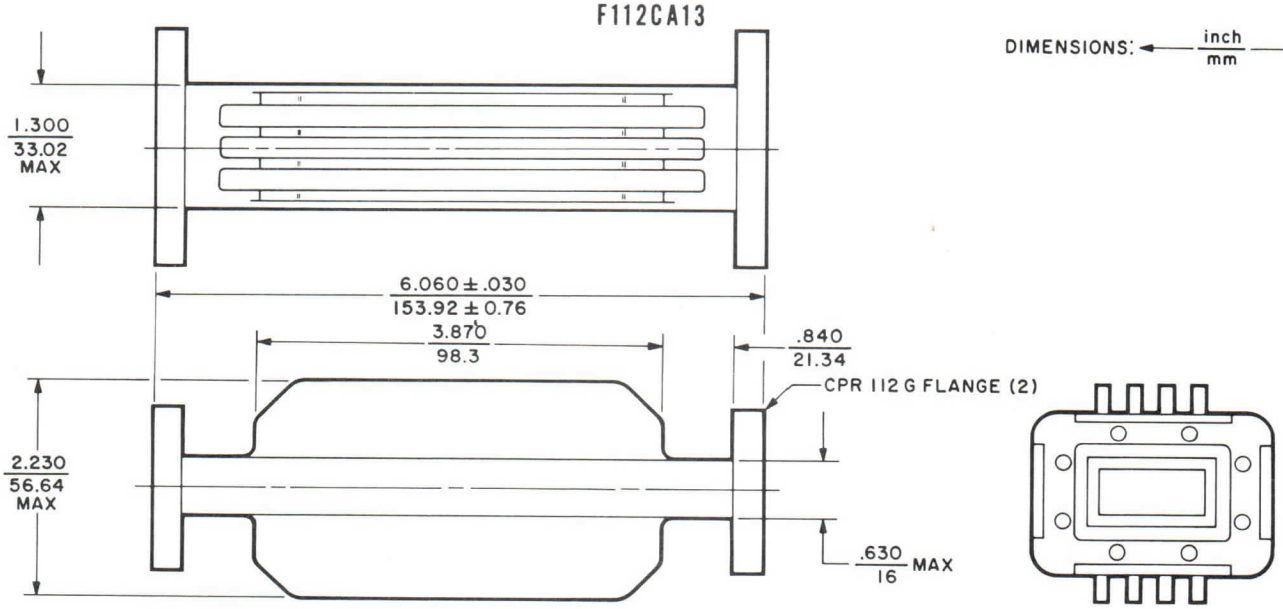

varian

PRELIMINARY
TECHNICAL DATA

F112CA12
F112CA13
HIGH POWER MICROWAVE FILTERS
7.9-8.4 GHz

DESCRIPTION

The F112CA12 and F112CA13 are low-pass, wide stopband filters for use in high power CW transmitters operating between 7.9 and 8.4 gigahertz. The basic filter can be operated at either 5 kilowatts or 10 kilowatts depending upon whether forced-air cooling or water cooling is provided. The filters achieve harmonic rejection by reflection of the unwanted rf power. Insertion loss is less than 0.2 dB. The second harmonic attenuation is down 50 dB, while the third harmonic is at least 40 dB, and the fourth harmonic is down 30 dB or more. For best performance, the filter should be mounted immediately after the ferrite isolator located near the output section of the high power amplifier tube.

These reactive type filters use variable impedance waveguides and are referred to as waffle iron filters due to their filter element appearance. Sturdy, dip-brazed casting construction assures reliable long-life performance in most environments. Modified versions using different flanges or insertion lengths can be supplied to meet special requirements.

GENERAL CHARACTERISTICS[1]

ELECTRICAL

Passband Frequency Range	7.9 to 8.4 GHz
Power Handling, CW, max	
F112CA12	10 kW
F112CA13	5 kW
Insertion Loss, max	0.2 dB
Passband VSWR, max	1.2:1
Stopband Attenuation, min	
2nd Harmonic	50 dB
3rd Harmonic	40 dB
4th Harmonic	30 dB

PHYSICAL

Dimensions	See Outline Drawings
Weight, max	1.5 lb/681 g
Mounting Position	Any
Coolant Flow	
F112CA12, liquid[2]	1 gal/min(0.06 l/s)
F112CA13, forced air	50 ft^3/min(23.5 l/s)
Flanges	See Outline Drawings
Waveguide Pressure, dry air or equivalent[3]	
Operating	0.5 lbf/in^2 (0.035 kgf/cm^2)
Operating Temperature, approx	
F112CA13	145 °C
Finish, exterior	Optional

NOTES:

1. Characteristics are based on performance tests. The values may change without notice as a result of additional data or product refinement. Consult the Palo Alto Microwave Tube Division, Microwave Components Operation before using this information for final equipment design.
2. The operating pressure of the coolant system should not exceed 125 lbf/in^2g (8.8 kgf/cm^2g).
3. The waveguide is pressure tested to 5 lbf/in^2g (0.35 kgf/cm^2g) at the factory. Although not required, 0.5 lbf/in pressure is recommended, to keep the waveguide interior clean and dry.

3630 1/77

Printed in U.S.A.

CHARACTERISTIC CURVES

Typical performance values

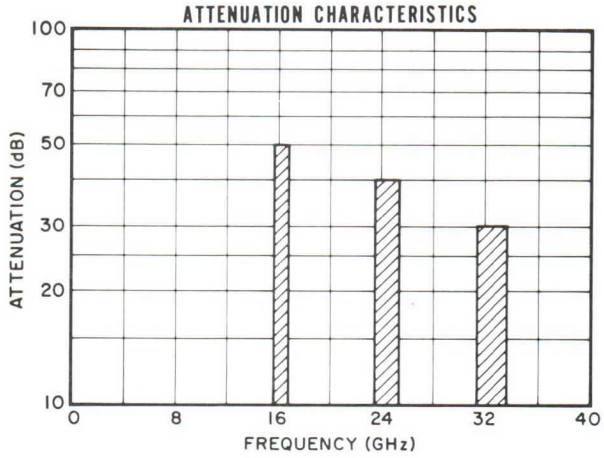

OUTLINE DRAWINGS

F112CA12

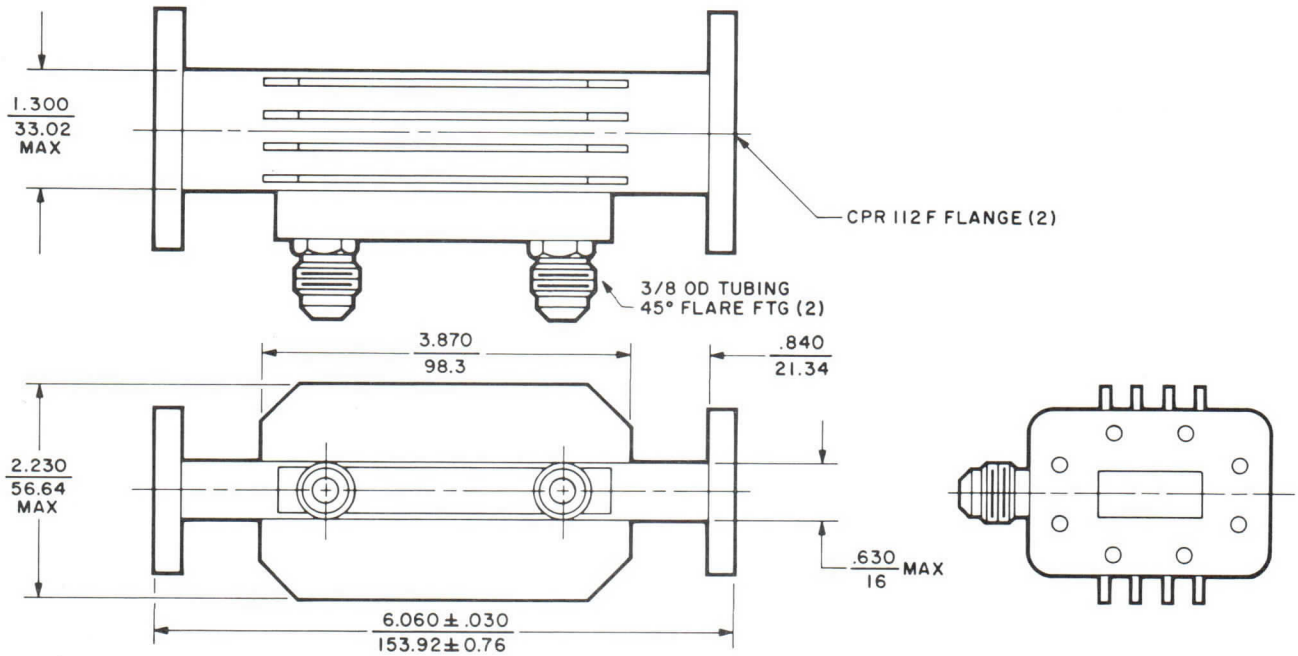

F112CA13

DIMENSIONS: ← inch / mm →

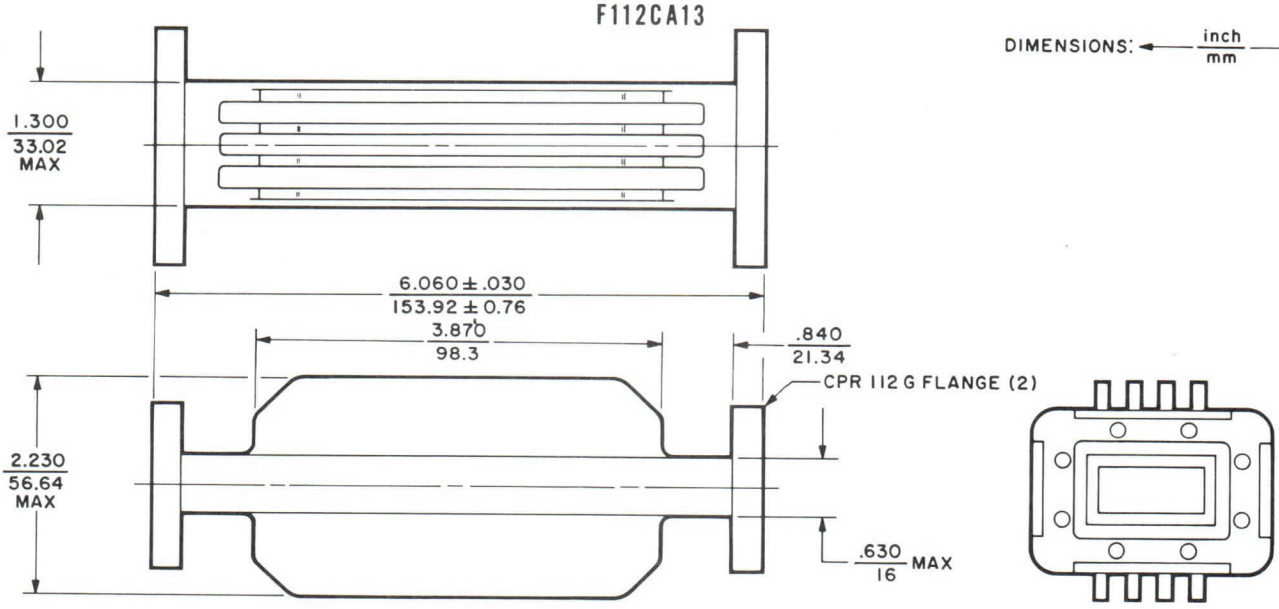

varian

HIGH POWER MICROWAVE FILTER

PRELIMINARY DATA SHEET

F112DA1
6-66

DESCRIPTION

The F112DA1 is a bandpass filter of the reactive type. It introduces a large reactive impedance to undesirable spurious signals generated by a microwave transmitter while introducing a minimum of passband attenuation. This filter is normally located near the transmitting tube in the line between the tube and the antenna.

This reactive-type filter consists of direct-coupled cavities of WR-112 waveguide. A feature of this filter is tuning with an inductive post located inside the filter along the narrow wall. This type of tuning permits the filter to operate at its maximum power capability without close machining tolerances. It also permits the filter to have near theoretical matching characteristics.

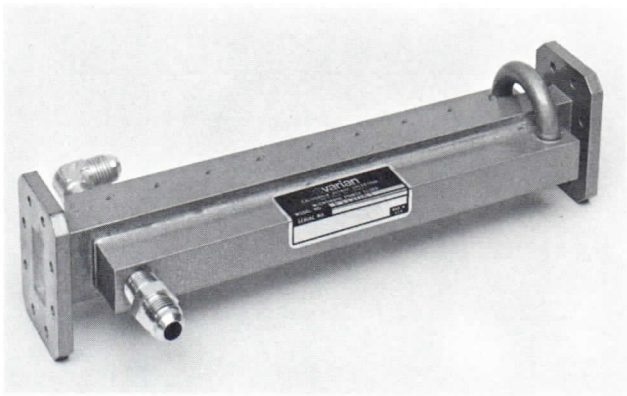

RATINGS

	Frequency (GHz)	Attenuation (dB) Note 1	Max VSWR	CW Power (kW) Note 2
Passband	8.00 - 8.35	0.35 max	1.20	10
Stopbands	d-c - 7.75 8.6 - 10.00	50 min 50 min		

FEATURES

- Reactive filtering of spurious signals
- Direct-coupled-cavities principle
- High power
- High stopband loss
- Rugged brazed copper alloy construction
- Lightweight and small size

MECHANICAL

Mounting position	Any
Waveguide size	WR-112
RF connectors	See outline
Length, in., approx	10
Weight, lb., approx	3.6
Pressure capability, psig, max	20
Cooling	Liquid
Finish	Silver gray hammertone

TYPICAL CHARACTERISTICS

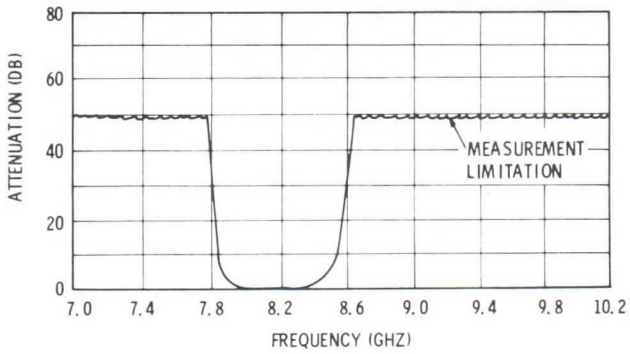

ENVIRONMENTAL

This rugged brazed copper alloy filter is suitable for use in severe environments. Filters to meet specific environmental requirements are available on request.

NOTES

1. Attenuation ratings are measured for the TE_{10} mode.
2. The specified power rating is for pressurization with dry air at 14.7 psia.

OUTLINE DRAWING

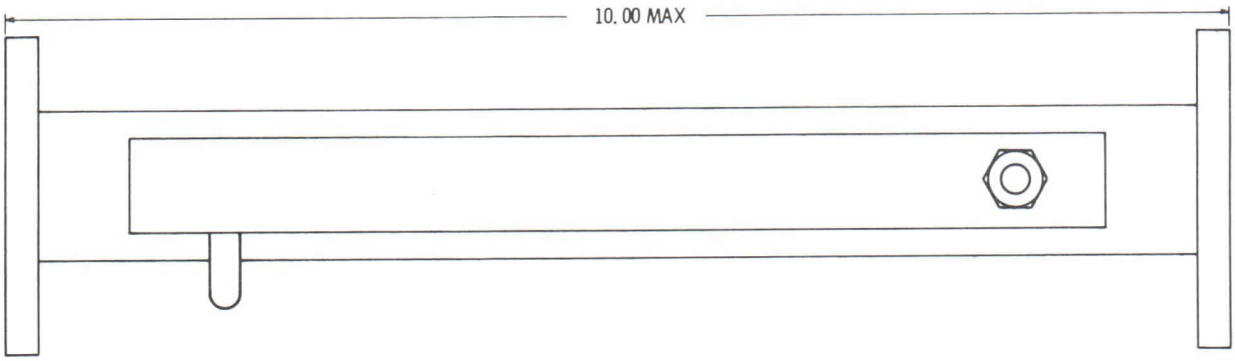

EITHER END MAY BE USED FOR THE RF INPUT AND EITHER FITTING MAY BE USED FOR THE COOLANT INPUT

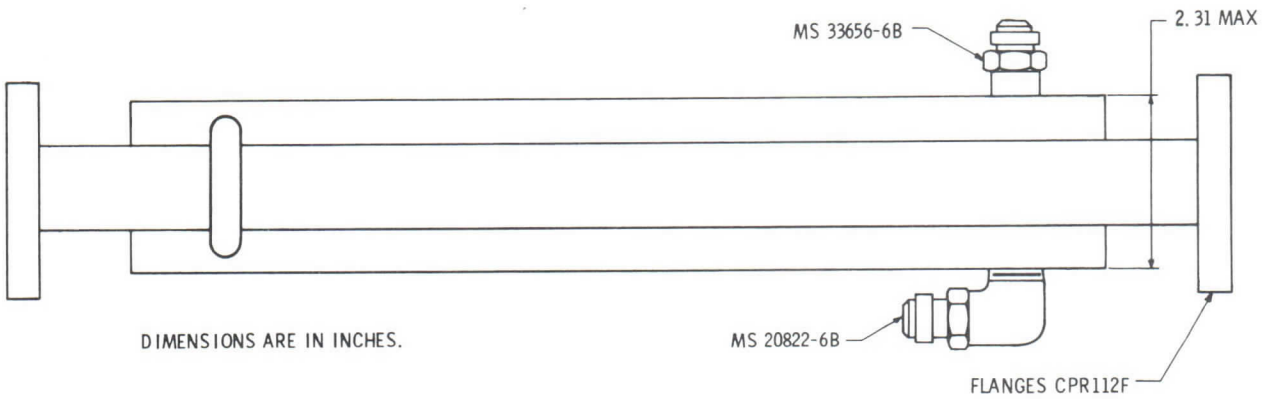

DIMENSIONS ARE IN INCHES.

varian

HIGH POWER MICROWAVE FILTER

DATA SHEET

F112FA2
6-66

DESCRIPTION

The F112FA2 is a single-section harmonic filter of the reactive type. It introduces a large reactive impedance to undesirable spurious signals generated by a microwave transmitter while introducing a minimum of passband attenuation. This filter is located normally near the transmitting tube in the line between the tube and the antenna.

This reactive-type filter uses tuned secondary waveguides to reflect all modes of the second harmonic frequencies and at the same time permits the passband frequencies to pass unaffected.

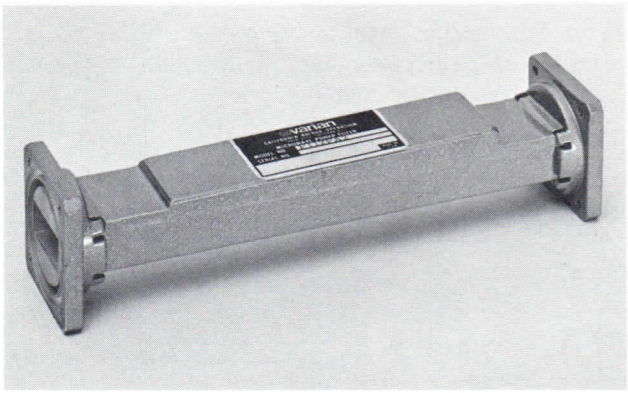

RATINGS

	Frequency (GHz)	Attenuation (dB) Note 1	Max VSWR	CW Power (kW) Note 2
Passband	7.9 - 8.4	0.15 max	1.2	10
Stopband	15.8 - 16.8	30 min		

FEATURES

- Reactive filtering of second harmonic
- Tuned secondary waveguides principle
- High power
- Low passband loss
- High stopband loss
- Rugged brazed copper alloy construction
- Lightweight and small size

MECHANICAL

Mounting position	Any
Waveguide size	WR-112
RF connectors	See outline
Length, in. approx	8
Weight, lb., approx	2
Pressure capability, psig. max	20
Cooling	Convection and radiation
Finish	Silver gray hammertone

ENVIRONMENTAL

This rugged brazed copper alloy filter is suitable for use in severe environments. Filters to meet specific environmental requirements are available on request.

NOTES

1. Attenuation ratings are measured for the TE_{10} mode in the passband and the TE_{10} and TE_{01} modes in the stopband.
2. The specified power rating is for pressurization with dry air at 14.7 psia.

OUTLINE DRAWING

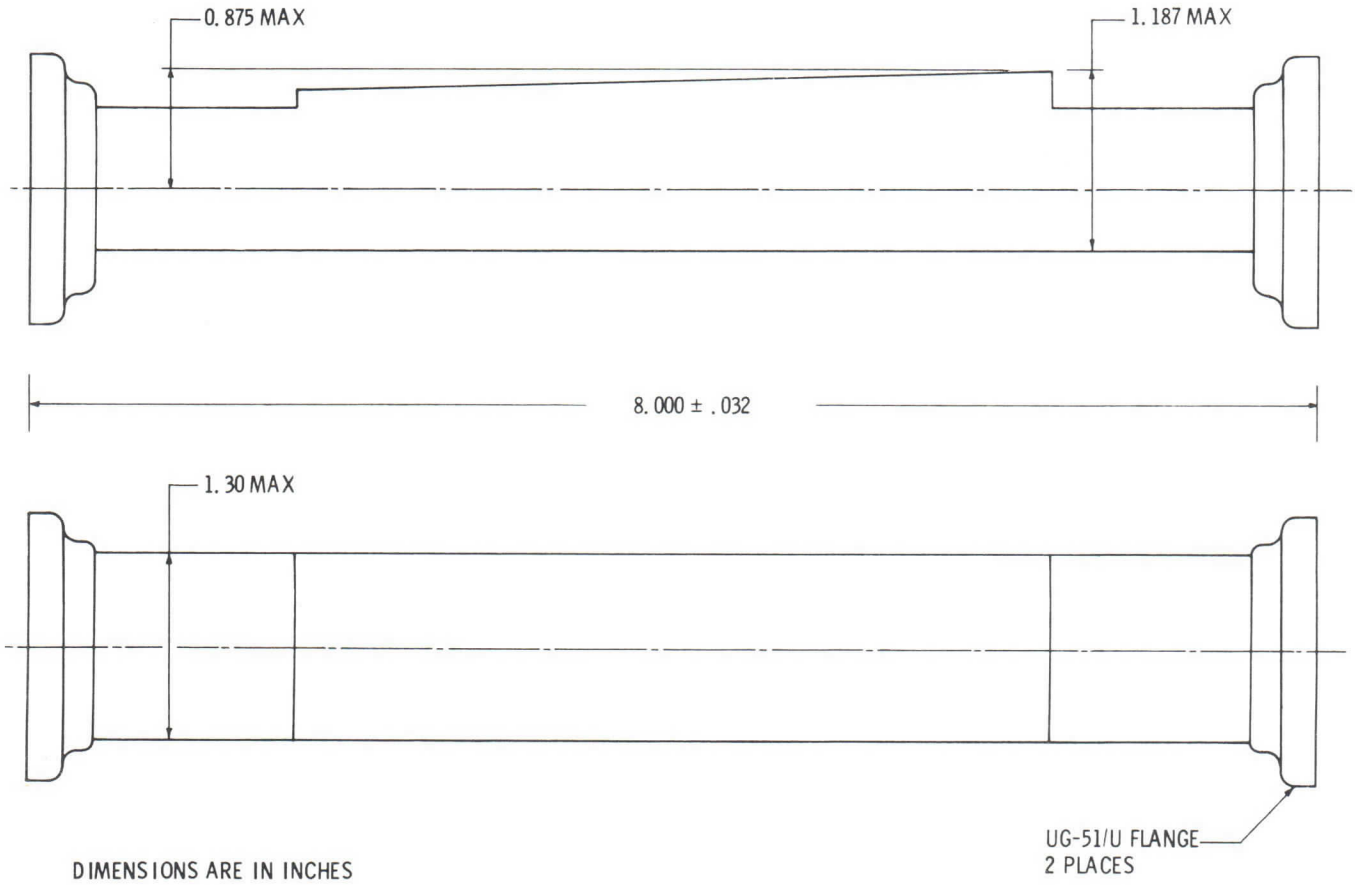

DIMENSIONS ARE IN INCHES

Printed in U.S.A.

varian
electron tube and device group

TECHNICAL DATA

F137AA3

HIGH POWER MICROWAVE FILTER

DESCRIPTION

The F137AA3 is a straight leaky-wall, absorptive harmonic filter for use with high-power commercial satellite communication transmitters requiring optimum spurious harmonic-energy suppression. It can handle an average power of 10 kilowatts between 5.925 and 6.425 gigahertz. Insertion loss is less than 0.2 decibel; second and third harmonic attenuation is at least 40 decibels. For best performance, the filter should be installed near the transmitting tube in the waveguide transmission line between the tube and antenna.

This filter consists of a primary waveguide and arrays of terminated secondary waveguides mounted along the primary waveguide walls. The primary waveguide serves as the high-power bandpass element; the secondary waveguide terminations absorb the harmonic signals. Sturdy construction assures reliable, long-life performance. Modified versions can be supplied to meet special requirements and higher power levels.

GENERAL CHARACTERISTICS

ELECTRICAL

Passband Frequency Range	5.925 to 6.425 GHz
Power Handling, CW	10 kW
Insertion Loss, max[1]	0.2 dB
Passband VSWR, max	1.2:1
Stopband Attenuation, min[2]	
2nd Harmonic	40 dB
3rd Harmonic	40 dB

PHYSICAL

Dimensions	See Outline Drawing
Weight, approx	32 lb
Operating and Mounting Position	Any
RF Flanges	Mate with CPR137G
Standard Finishes[3]	
Waveguide and Flange	Copper Alloy
Exterior Surface	Red Copon Epoxy
Waveguide Pressurization	10 lbf/in^{2}g
Cooling	Convection and Radiation
Temperature Range	
Operating	-10 to 55 °C
Non-operating and Storage	-40 to +100 °C
Altitude, above sea level, maximum	
Operating	10,000 ft
Non-operating and Storage	50,000 ft

NOTES:

1. Measured in the TE_{10} mode.
2. Measured in the TE_{10} and TE_{01} modes.
3. Other finishes are available on special order.

1860 2/68

Printed in U.S.A.

palo alto tube division/611 hansen way/palo alto/california 94303

CHARACTERISTIC CURVE

Typical performance value

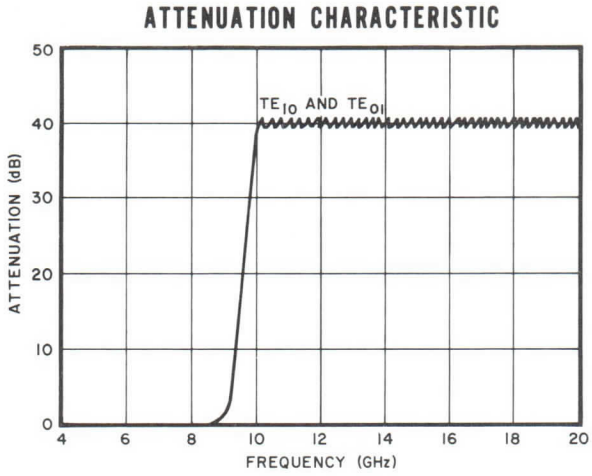

OUTLINE DRAWING

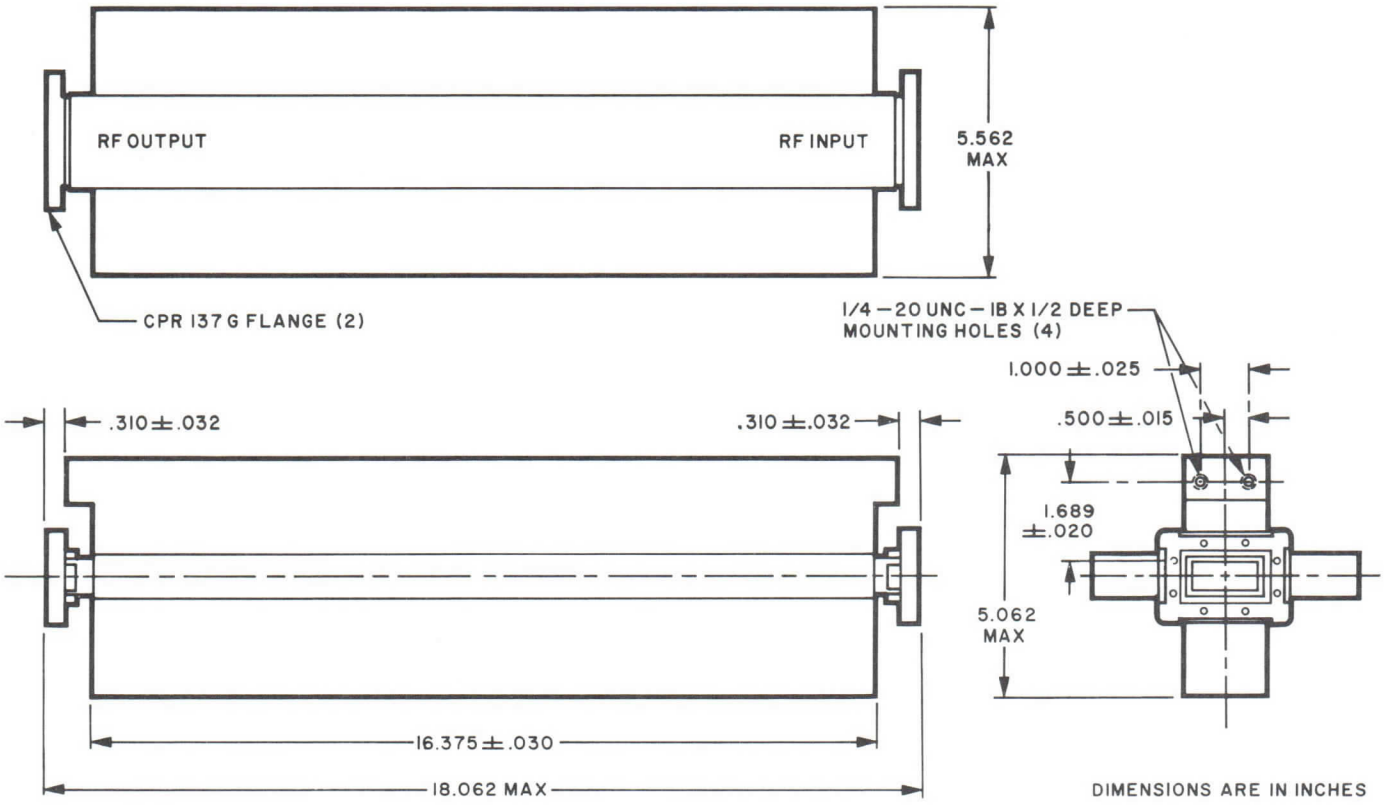

DIMENSIONS ARE IN INCHES

varian
palo alto tube division

TECHNICAL DATA

F137AA4

HIGH POWER MICROWAVE FILTER

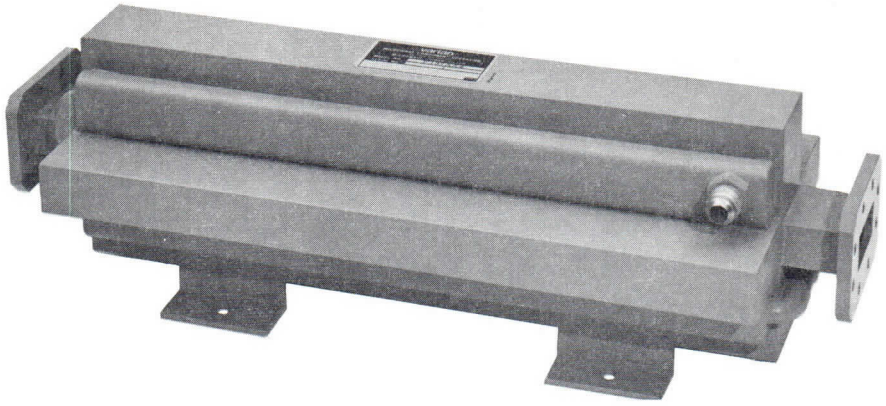

DESCRIPTION

The F137AA4 is a straight leaky-wall, absorptive harmonic filter for use with high-power commercial satellite communication transmitters requiring optimum spurious harmonic-energy suppression. It can handle an average power of 15 kilowatts between 5.925 and 6.425 gigahertz. Insertion loss is less than 0.2 decibel; second harmonic attenuation is at least 40 dB and third harmonic attenuation is at least 30 dB. For best performance, the filter should be installed near the transmitting tube in the waveguide transmission line between the tube and antenna.

This filter consists of a primary waveguide and arrays of terminated secondary waveguides mounted along the primary waveguide walls. The primary waveguide serves as the high-power bandpass element; the secondary waveguide terminations absorb the harmonic signals. Sturdy construction assures reliable, long-life performance. Modified versions can be supplied to meet special requirements and higher power levels.

GENERAL CHARACTERISTICS

ELECTRICAL

Passband Frequency Range	5.925 to 6.425 GHz
Power Handling, CW	15 kW
Insertion Loss, max[1]	0.2 dB
Passband VSWR, max[1]	1.2:1
Stopband Attenuation, min[2]	
2nd Harmonic	40 dB
3rd Harmonic	30 dB

PHYSICAL

Dimensions	See Outline Drawing
Weight, approx	35 lb
Operating and Mounting Position	Any
RF Flanges	Mate with CPR137F
Standard Finishes[3]	
Exterior Surface	Red Copon Epoxy
Waveguide Pressurization	15 lbf/in^2g
Cooling	Water or Ethylene Glycol/Water
Temperature Range	
Operating	-54 to 71 °C
Non-operating and Storage	-61 to 71 °C
Altitude, above sea level, maximum	
Operating	15,000 ft
Non-operating and Storage	50,000 ft

NOTES:

1. Measured in the TE_{10} mode.
2. Measured in the TE_{10} and TE_{01} modes.
3. Other finishes are available on special order.

2826 6/72

Printed in U.S.A.

F137AA4

CHARACTERISTIC CURVE

Typical performance values

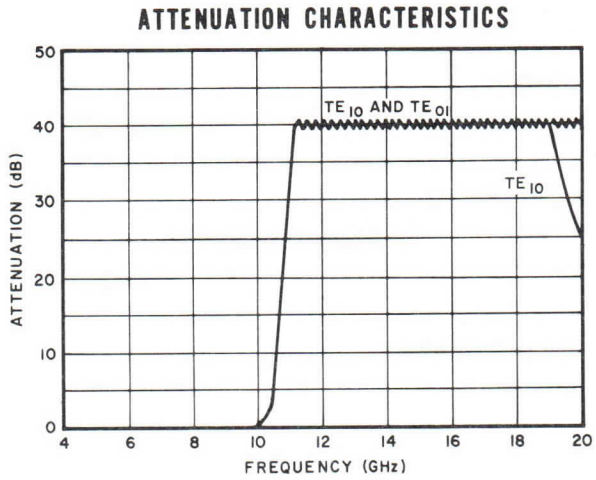

OUTLINE DRAWING

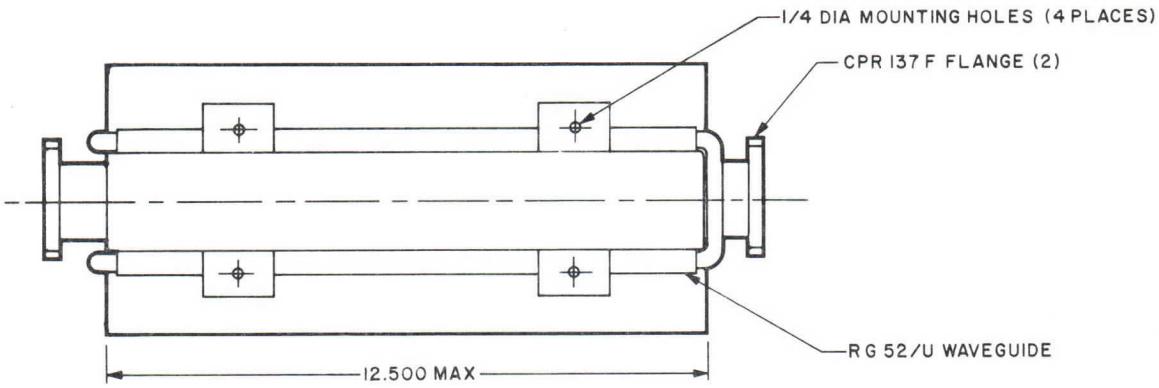

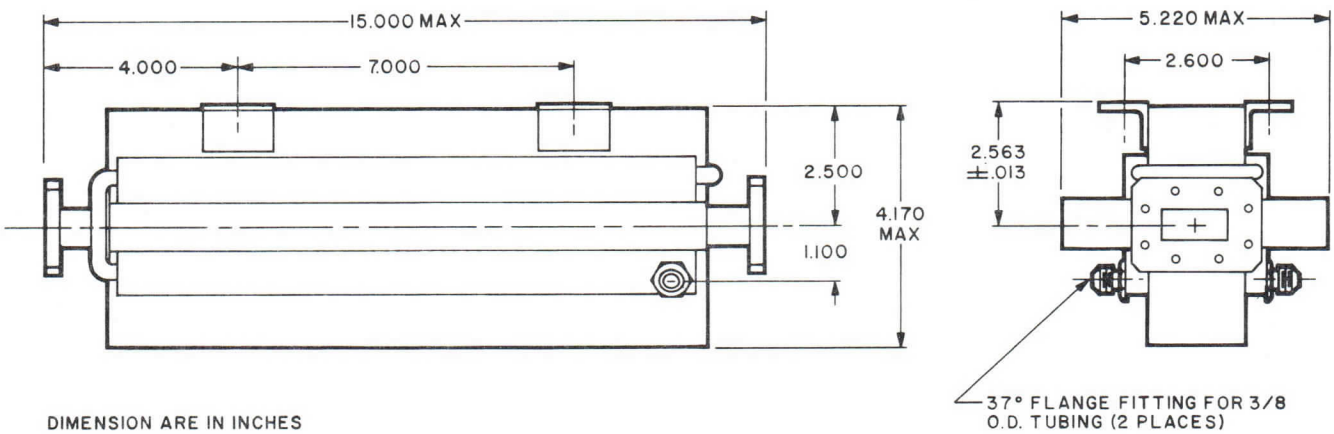

DIMENSION ARE IN INCHES

varian
electron tube and device group

TECHNICAL DATA

F137AA6

HIGH POWER
MICROWAVE FILTER

DESCRIPTION

The F137AA6 is a straight leaky-wall, absorptive harmonic filter for use with high-power commercial satellite communication transmitters requiring optimum spurious harmonic-energy suppression. It can handle an average power of 12 kilowatts between 5.925 and 6.425 gigahertz. Insertion loss is less than 0.3 decibel; second and third harmonic attenuation is at least 50 decibels. For best performance, the filter should be installed near the transmitting tube in the waveguide transmission line between the tube and antenna. This filter consists of a primary waveguide and arrays of terminated secondary waveguides mounted along the primary waveguide walls. The primary waveguide serves as the high-power bandpass element; the secondary waveguide terminations absorb the harmonic signals. Sturdy construction assures reliable, long-life performance. Modified versions can be supplied to meet special requirements.

GENERAL CHARACTERISTICS

ELECTRICAL

Passband Frequency Range	5.925 to 6.425 GHz
Power Handling, CW	12 kW
Insertion Loss, max[1]	0.3 dB
Passband VSWR, max	1.2:1

Stopband Attenuation, min

	TE_{10}	TE_{01}
2nd Harmonic	50	50 dB
3rd Harmonic	50	50 dB
4th Harmonic	40	50 dB
5th Harmonic	30	25 dB
6th Harmonic	30	25 dB

ENVIRONMENTAL

Temperature Range	
Operating	0 to 100 °C
Non-Operating and Storage	-62 to +71 °C
Altitude, above sea level, max	
Operating	10,000 ft

PHYSICAL

Dimensions	See Outline Drawing
Weight, approx	35 lb
Operating and Mounting Position	Any
RF Flanges	Mates with CPR137F
Standard Finishes[2]	
Exterior Surface	Red Copon Epoxy
Waveguide Pressurization	15 lbf/in^2a
Cooling	Water
Coolant Flow, min	1 gal/min
Pressure Drop, at 1 gal/min	5 lbf/in^2

CHARACTERISTIC CURVES

Typical performance values

ATTENUATION CHARACTERISTICS

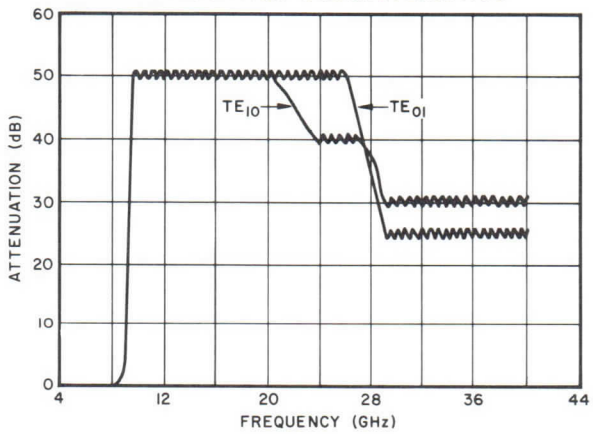

NOTES:

1. Measured in the TE_{10} and TE_{01} modes.
2. Other finishes are available on special order.

1865 2/68

Printed in U.S.A.

palo alto tube division/611 hansen way/palo alto/california 94303

F137AA6

OUTLINE DRAWING

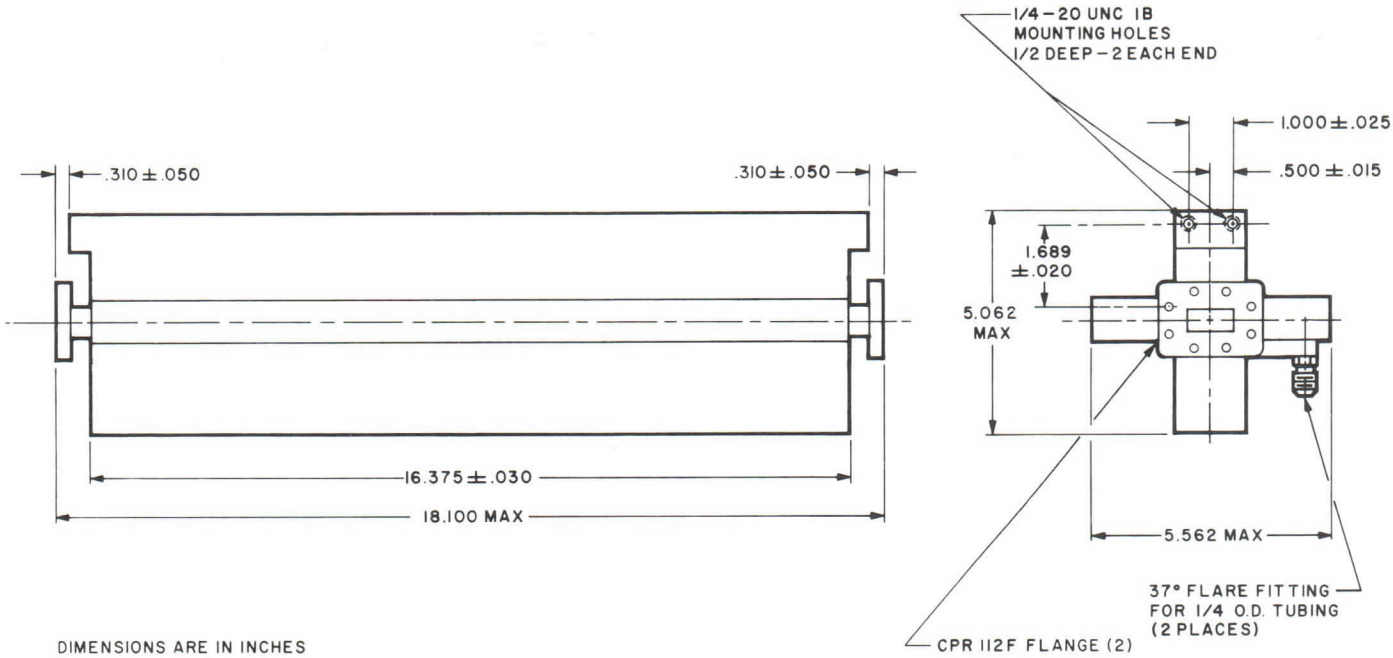

DIMENSIONS ARE IN INCHES

varian

TECHNICAL DATA

F137AA7

HIGH POWER MICROWAVE FILTER

5.925-6.425 GHz

DESCRIPTION

The F137AA7 is a straight, leaky-wall, absorptive, low-pass harmonic filter for use with high-power commercial satellite communication transmitters requiring optimum spurious harmonic-energy suppression. It can handle an average power of 8 kilowatts between 5.925 and 6.425 gigahertz. Insertion loss is less than 0.2 dB. The second harmonic attenuation is down 50 dB, while the third harmonic is at least 40 dB and the fourth harmonic is down 30 dB or more. For best performance, the filter should be installed near the transmitting tube in the waveguide transmission line between the tube and antenna.

This filter consists of a primary waveguide and arrays of terminated secondary waveguides mounted along the primary waveguide walls. The primary waveguide serves as the high-power bandpass element; the secondary waveguide terminations absorb the harmonic signals. Sturdy construction assures reliable, long-life performance. Modified versions can be supplied to meet special requirements and higher power levels.

GENERAL CHARACTERISTICS [1]

ELECTRICAL

Passband Frequency Range	5.925 to 6.425 GHz
Power Handling, CW, max	8 kW
Insertion Loss, max	0.2 dB
Passband VSWR, max	1.2:1
Stopband Attenuation, min [2]	
2nd Harmonic	50 dB
3rd Harmonic	40 dB
4th Harmonic	30 dB

PHYSICAL

Dimensions	See Outline Drawing
Weight, approx	32 lb/14.5 kg
Operating and Mounting Position	Any
RF Flanges	Mate with CPR137F
Standard Finishes [3]	
Exterior Surface	Red Copon Epoxy
Waveguide	Pressure Tested to 5 lbf/in^{2}g
Cooling	Convection and Radiation

ENVIRONMENTAL

Altitude, above sea level, maximum	
Operating	15,000 ft (4.5 km)
Non-operating and Storage	50,000 ft (15 km)
Temperature Range	
Operating	-54 to 71 °C
Non-operating and Storage	-61 to 71 °C

3471 3/76

Printed in U.S.A.

CHARACTERISTIC CURVES

Typical performance values

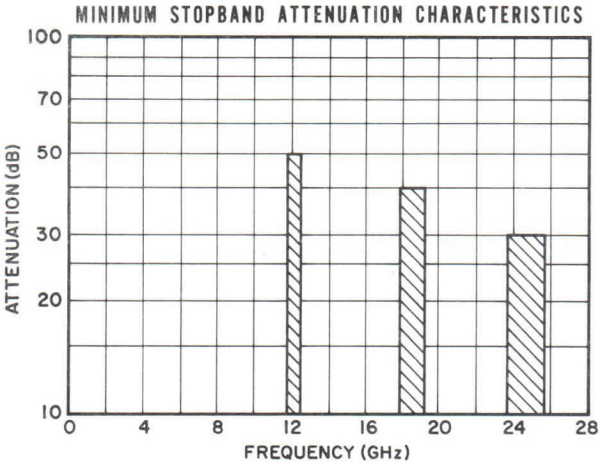

NOTES:

1. Characteristic values are based on performance tests. These values may change without notice as a result of additional data or product refinement. Consult the Palo Alto Microwave Tube Division before using this information for final equipment design.
2. Measured in the TE_{10} and TE_{01} modes.
3. Other finishes are available on special order.

SYSTEM DIAGRAM WITH F137AA7 FILTER

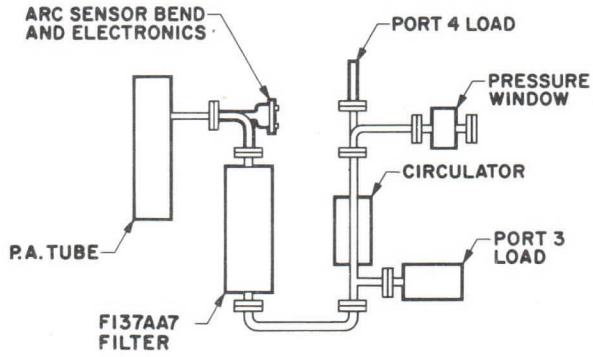

OUTLINE DRAWING

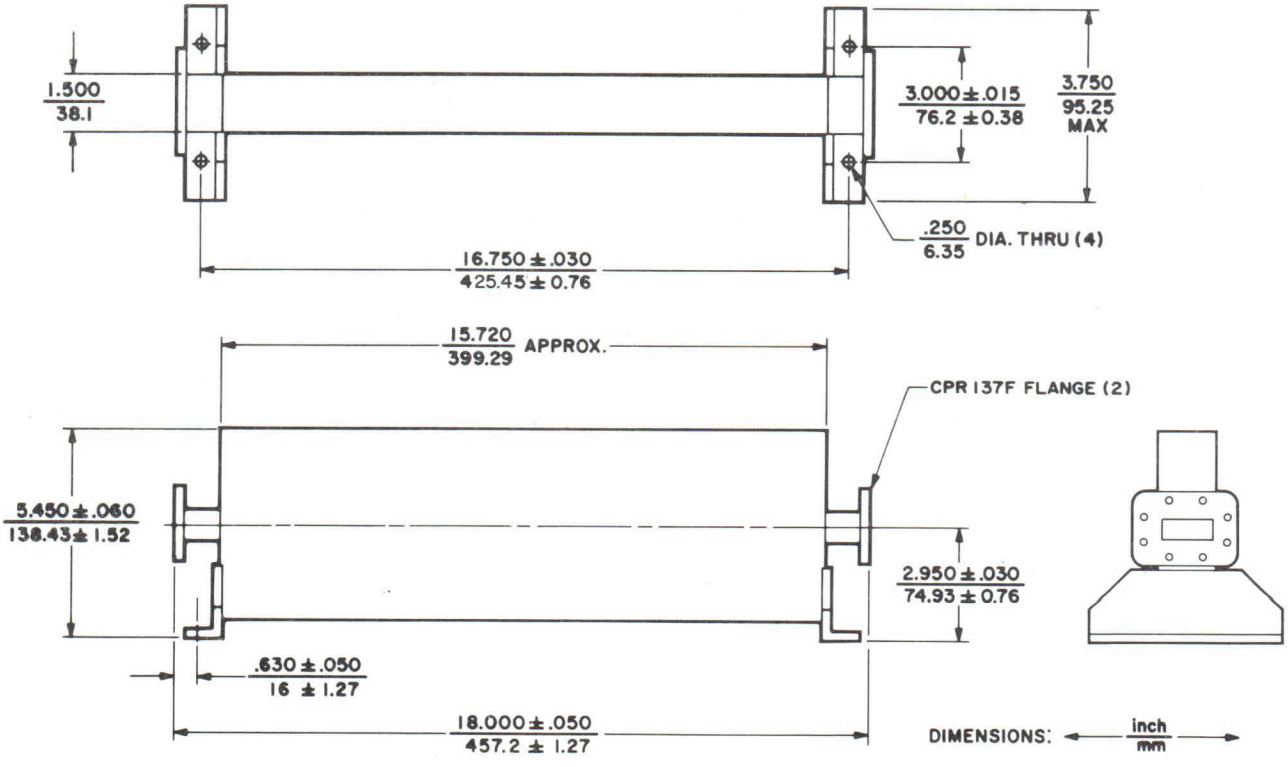

varian

HIGH POWER MICROWAVE FILTER

DATA SHEET

F137DA2

DESCRIPTION

The F137DA2 is a high pass filter of the reactive type. It introduces a large reactive impedance to undesirable spurious signals, generated by a microwave transmitter, while introducing a minimum of passband attenuation. This filter is normally located near the transmitting tube in the line between the tube and the antenna.

This reactive-type filter consists of direct-coupled cavities of WR-137 waveguide. A feature of this filter is fixed tuning with the inductive irises themselves. This type of tuning permits the filter to operate at its maximum power capability. Other features are: high power, high stopband loss, rugged brazed-copper-alloy construction, lightweight, and small size.

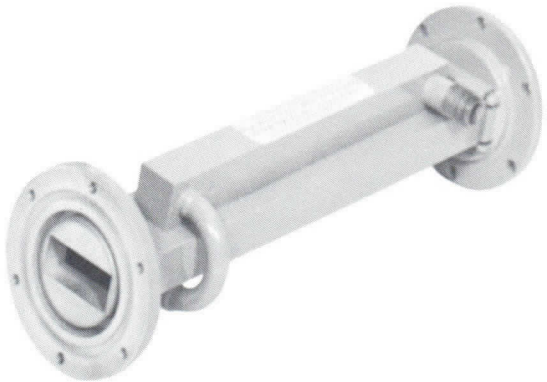

GENERAL CHARACTERISTICS[1]

ELECTRICAL

PASSBAND CHARACTERISTICS				STOPBAND CHARACTERISTICS	
Frequency Range (GHz)	Power Average (kW)	Maximum Insertion Loss[2] (dB)	Maximum VSWR	Minimum Attenuation[3] for Frequency Ranges in GHz	
				dc to 7.5 (dB)	7.5 to 7.7 (dB)
7.9 - 8.4	20	0.25	1.2:1	50	30

PHYSICAL

Dimensions, approximate .... See Outline Drawing
Weight, approximate
  Net ..... 3.5 lb
  Shipping, domestic commercial ..... 5.0 lb
Operating and Mounting Position ..... Any
Waveguide Size WR137
RF Connectors
  Input and Output ..... See outline
Standard Finishes
  Waveguide Interior and Flange Surfaces ..... Copper Alloy
  Exterior Paint ..... To be specified
Pressurization, maximum[4] ..... 20 lbf/in^{2}g
Cooling ..... Liquid

ENVIRONMENTAL[5]

Temperature Range
  Operating ..... -54 to +71 °C
  Non-operating and Storage ..... -62 to +71 °C
Altitude, above sea level, maximum
  Operating[6] ..... 15,000 ft
  Non-operating and Storage ..... 50,000 ft
Shock ... Drop test per par. 4.12.6, MIL-E-4970A
Vibration ..... Per par. 4.6.8, MIL-E-4970A
Humidity ..... Per Method 103A, Condition B, MIL-STD-202B
Salt Atmosphere.. Per Method 101A, Condition B, MIL-STD-202B
Fungus Resistance...Fabricated from non-nutrient materials

Pub. 1668 4/67

Printed in U.S.A.

F137DA2

NOTES:

1. This filter can be modified to meet other specifications.
2. Measured in the TE_{10} mode.
3. Measured in the TE_{10} mode.
4. The F137DA2 is pressure tested to 20 lbf/in^2g at the factory.
5. Unless otherwise specified, environmental characteristics are for non-operating and storage conditions.
6. This power rating applies for the specified environment. Operation at higher altitudes or temperatures than those specified will require pressurization of the filter.

CHARACTERISTIC CURVE

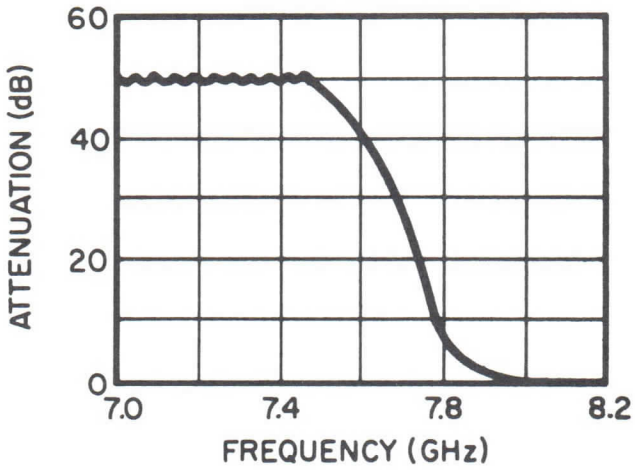

OUTLINE

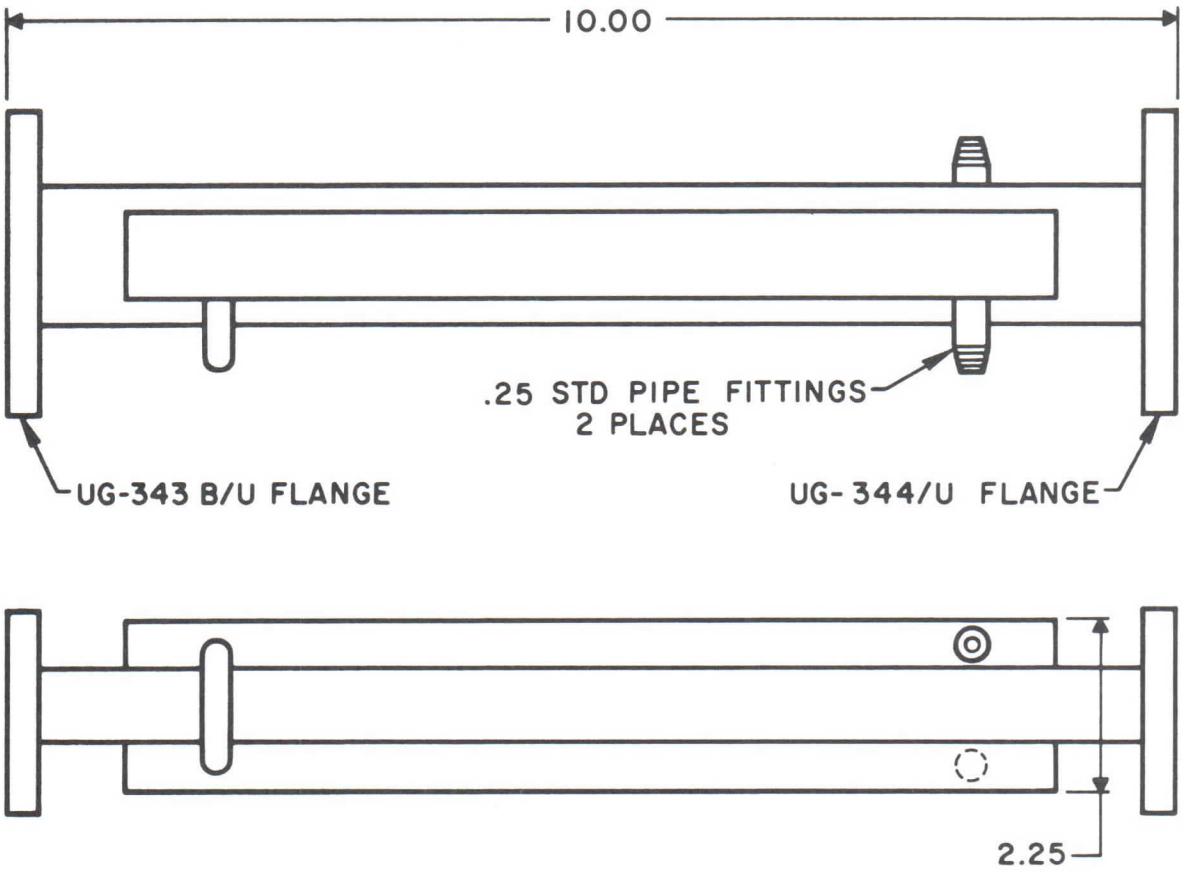

EITHER END MAY BE USED FOR THE RF INPUT AND
EITHER FITTING MAY BE USED FOR THE COOLANT INPUT

DIMENSIONS ARE IN INCHES

varian
palo alto tube division

TECHNICAL DATA

F187CA1

HIGH POWER MICROWAVE FILTER

4.4-5.0 GHz
1.5 kW

DESCRIPTION

The F187CA1 is a single-section reflective harmonic filter, referred to as a waffle-iron filter because of the filter-element appearance. It produces a large reactive impedance to harmonic signals above the passband of 4.4 to 5.0 gigahertz, regardless of mode, with very low passband attenuation. This small, lightweight, rugged aluminum filter is ideal for applications requiring high power handling capability, good harmonic suppression, and low insertion loss. It can be positioned anywhere in the transmission line between the transmitting tube and the antenna.

GENERAL CHARACTERISTICS [1,2]

ELECTRICAL

Passband Frequency Range ..... 4.4-5.0 GHz
Power Handling, CW [3] ..... 1.5 kW
Insertion Loss, maximum ..... 0.3 dB
Passband VSWR, maximum 1.2:1

Stopband Attenuation, minimum [4]
- 2nd Harmonic ..... 35 dB
- 3rd Harmonic ..... 30 dB

PHYSICAL

Dimensions ..... See Outline Drawing
Weight, approximate ..... 2.5 lb
Operating and Mounting Position ..... Any
Waveguide Size WR187
RF Flanges ..... Mate with UG-406A/U
Standard Finishes [5]
- Waveguide Interior and Flange Surfaces ..... Iridited Aluminum
- Exterior Paint ..... Red Copon Epoxy

Pressurization, maximum [6] ..... 30 lbf/in^{2}g
Cooling ..... Convection and Radiation

ENVIRONMENTAL [7]

Temperature Range
- Operating ..... -54 to +71 °C
- Non-operating and Storage ..... -62 to +71 °C

Altitude, above sea level, maximum
- Operating ..... 15,000 ft
- Non-operating and Storage ..... 50,000 ft

Shock ..... Drop test per par. 4.12.6, MIL-E-4970A
Vibration ..... Per par. 4.6.8, MIL-E-4970A
Humidity ..... Per Method 103A, Condition B, MIL-STD-202B
Salt Atmosphere ..... Per Method 101A, Condition B, MIL-STD-202B
Fungus Resistance ..... Fabricated from non-nutrient materials

2827 7/72

Printed in U.S.A.

CHARACTERISTIC CURVE
Typical Performance Values

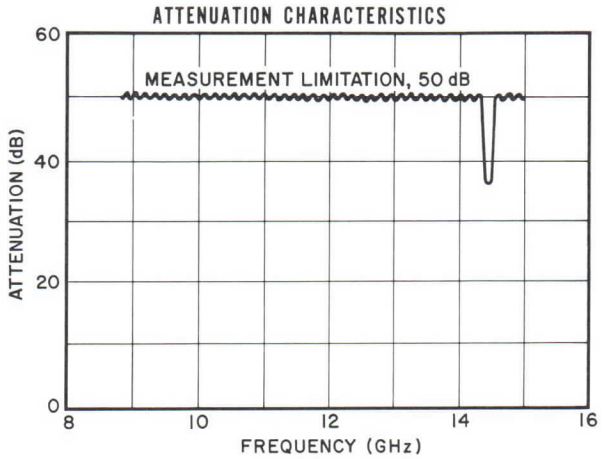

NOTES:

1. Characteristic values are based on performance tests. These figures may change without notice as a result of additional performance data or product refinement. The Varian Palo Alto Tube Division should be consulted before using this information for equipment design.
2. This filter can be modified to meet other specifications.
3. This power rating applies for the specified environment. Operation at higher altitudes or temperatures than those specified may require pressurization of the filter. Consult the Varian Palo Alto Tube Division for more information.
4. Measured in the TE_{10} and TE_{01} modes.
5. Other finishes are available on special order.
6. The F187CA1 is pressure tested to 15 lbf/in^2g at the factory.
7. Unless otherwise specified, environmental characteristics are for non-operating and storage conditions.

OUTLINE DRAWING

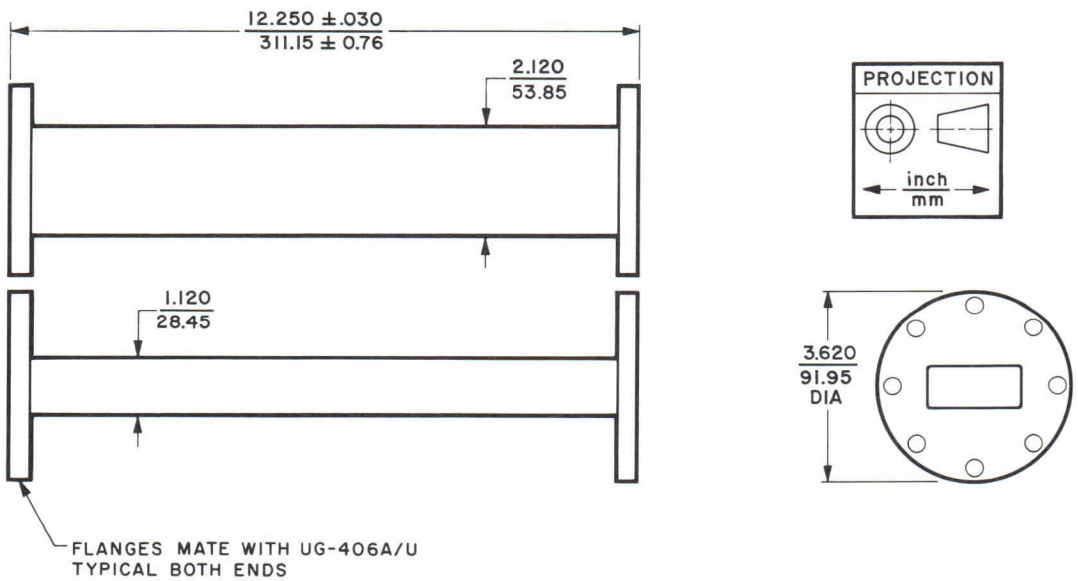

varian

HIGH POWER MICROWAVE FILTER

DATA SHEET

F187CA2

6-66

DESCRIPTION

The F187CA2 is a single-section harmonic filter of the reactive type. It introduces a large reactive impedance to undesirable spurious signals generated by a microwave transmitter while introducing a minimum of passband attenuation. This filter is located normally near the transmitting tube in the line between the tube and the antenna.

This reactive-type filter uses variable-impedance waveguide and is referred to as a waffle-iron filter because of its waffle-iron-like construction. This filter is rugged, compact, and easily fabricated.

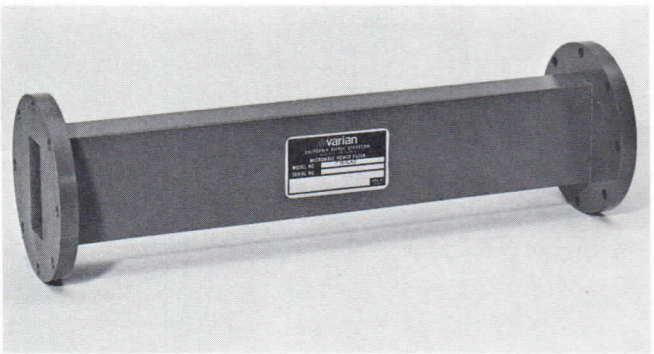

RATINGS

	Frequency (GHz)	Attenuation (dB) Note 1	Max VSWR	CW Power (kW) Note 2
Passband	4.4 - 5.0	0.2 max	1.2	3.0
Stopbands	8.8 - 15.0	60 min		
	8.6 - 15.4	50 min		
	8.4 - 20.0	40 min		
	8.3 - 20.5	30 min		

FEATURES

- Reactive filtering of harmonic signals
- Waffle-iron principle
- High power
- Low passband loss
- High stopband loss
- Rugged dip brazed aluminum construction
- Lightweight and small size

MECHANICAL

Mounting position	Any
Waveguide size	WR-187
RF connectors	See outline
Length, in., approx	12.25
Weight, lb., approx	2.5
Pressure capacity, psig, max	30
Cooling	Convection and radiation
Finish	Silver gray hammertone

TYPICAL CHARACTERISTICS

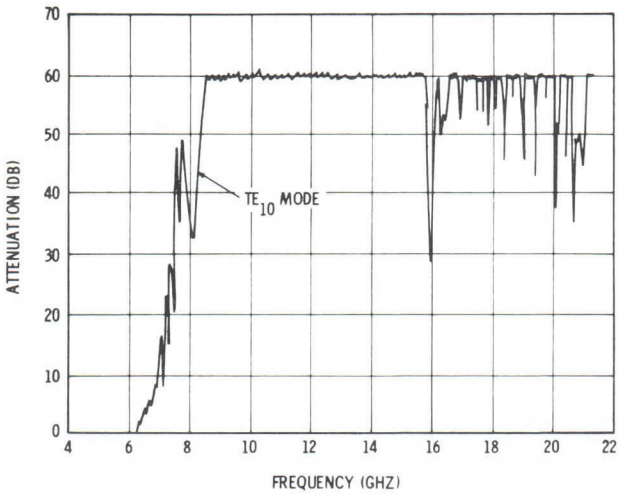

ENVIRONMENTAL

This rugged dip brazed aluminum filter is suitable for use in severe environments. Filters to meet specific environmental requirements are available on request.

NOTES

1. Attenuation ratings are measured for the TE_{10} mode in the passband and the TE_{10} and TE_{01} modes in the stopband.

2. The specified power rating is for pressurization with dry air at 14.7 psia.

OUTLINE DRAWING

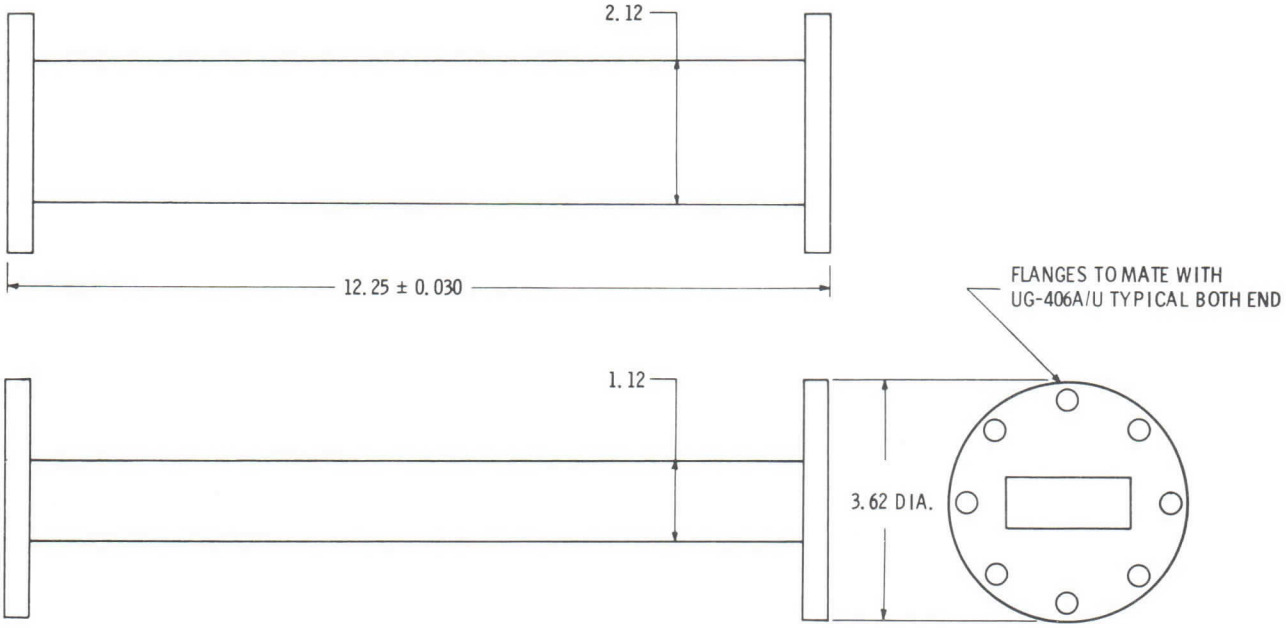

DIMENSIONS ARE IN INCHES; THOSE WITHOUT TOLERANCES ARE APPROXIMATE.

Printed in U.S.A.

varian
palo alto tube division

TECHNICAL DATA

F284AA1

HIGH POWER MICROWAVE FILTER

2.6-3.1 GHz
10 kW

DESCRIPTION

The F284AA1 is a straight leaky-wall, absorption harmonic filter for use in high-power radar systems requiring optimum spurious harmonic-energy suppression. It can handle an average power of 10 kilowatts between 2.6 and 3.1 gigahertz. Insertion loss is less than 0.15 dB; second and third harmonic attenuation is at least 50 dB and 40 dB respectively. For best performance, the filter should be installed near the transmitting tube in the waveguide transmission line between the tube and antenna. This filter consists of a primary waveguide and arrays of terminated secondary waveguides mounted along the primary waveguide walls. The primary waveguide serves as the high-power bandpass element; the secondary waveguide terminations absorb the harmonic signals. Sturdy construction assures reliable, long-life performance. Modified versions can be supplied to meet special requirements.

GENERAL CHARACTERISTICS [1]

ELECTRICAL

Passband Frequency Range	2.6 to 3.1 GHz
Power Handling, peak [2]	3 MW
Power Handling, CW	10 kW
Insertion Loss, maximum [3]	0.15 dB
Passband VSWR, maximum	1.15:1
Stopband Attenuation, minimum [4]	
2nd Harmonic	50 dB
3rd Harmonic	35 dB
Stopband Average Power Absorption	
2nd Harmonic	60 W
3rd Harmonic	50 W

PHYSICAL

Dimensions	See Outline Drawing
Weight, approximate	40 lb
Mounting Position	Any
Cooling	Convection and Radiation
RF Flanges	
Input	Mates with UG-584/U
Output	Mates with UG-585/U
Standard Finish [5]	Red Copon Epoxy
Waveguide Pressurization [6]	35 lbf/in^2g

ENVIRONMENTAL

Altitude, maximum	
Operating [2,7]	15,000 ft
Nonoperating	50,000 ft
Shock	Drop Test, Para. 4.12.6, MIL-E-4970A
Vibration	MIL-STD-167
Humidity	Method 103A, Condition B, MIL-STD-202B
Salt Atmosphere	Method 101A, Condition B, MIL-STD-202B
Temperature Range	
Operating	-54 to +71 °C
Nonoperating	-62 to +71 °C

2471 10/70

Printed in U.S.A.

NOTES:

1. Characteristic values are based on performance tests. These figures may change without notice as a result of additional performance data or product refinement. Contact Varian Palo Alto Tube Division, Microwave Components Operation, before using this information for equipment design.
2. The specified peak power rating is for waveguide pressurization of 45 lbf/in^{2}a. Peak power ratings for other conditions may be determined from the following "standard" ratings and conditions: (1) passband power 0.5 MW peak, maximum, (2) pressurization 14.7 lbf/in^{2}a, (3) ambient temperature 20 °C, and (4) dry air dielectric.
3. Measured in TE_{10} mode.
4. Measured in TE_{10} and TE_{01} modes.
5. Other finishes are available on special order.
6. This unit is pressure tested to 45 lbf/in^{2}g at the factory.
7. For high altitude operation, this filter must be pressurized.

OUTLINE DRAWING

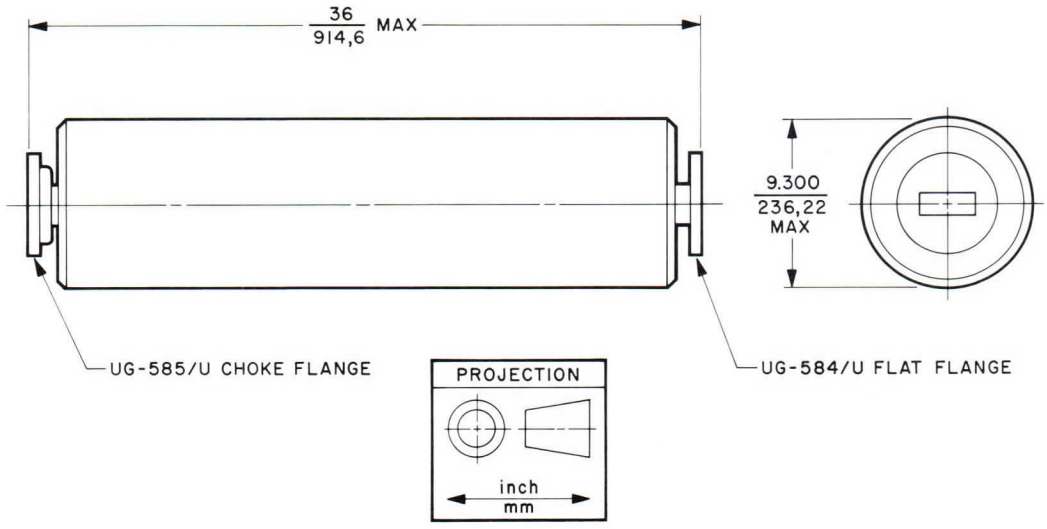

varian

TECHNICAL DATA

F284AA11
F284AA12
HIGH POWER MICROWAVE FILTERS
2.85-3.15 GHz
10 MW, peak

DESCRIPTION

The F284AA11 and F284AA12 low-pass harmonic filters are straight, leaky-wall absorptive types for use in high-power transmitters operating between 2.85 and 3.15 gigahertz. Each filter can handle about 10 megawatts peak power and 8 kilowatts average power. Insertion loss is less than 0.15 dB. Stopband attenuation is greater tahn 40 to 50 dB in the second harmonic and more than 15 to 20 dB in the third harmonic, depending upon the mode of operation. For best performance, the filter should be installed near the transmitter tube in the waveguide line between the tube and antenna.

Each filter consists of a primary waveguide and arrays of terminated secondary waveguides mounted along the primary waveguide walls which absorb the harmonic signals. Sturdy construction assures reliable long-life performance. Modified versions can be supplied to meet special requirements.

GENERAL CHARACTERISTICS

ELECTRICAL

Passband Frequency Range	2.85 to 3.15 GHz
Passband Power	
Peak[3]	10 MW
Average	8 kW
Passband Insertion Loss, amx	0.15 dB
Passband VSWR, max	1.15:1
Stopband Attenuation, min	
5.8 to 6.2 GHz	
TE_{10} Mode	50 dB
TE_{01} Mode	40 dB
6.2 to 8.7 GHz	
TE_{10} Mode	20 dB
TE_{01} Mode	20 dB
8.7 to 9.3 GHz	
TE_{10} Mode	20 dB
TE_{01} Mode	15 dB
Stopband VSWR, max	1.5:1

PHYSICAL

Dimensions	See Outline Drawings
Weight, approx	21 lb/9.5 kg
Cooling	Convection and Radiation
RF Connectors	See Outline Drawings
Pressurization	Factory tested to 35 lbf/in^2g(2.45 kgf/cm^2g)
Material	Aluminum

NOTES:

1. Characteristic values are based on performance tests. These figures may change without notice as the result of additional data or product refinement. Consult the Varian Palo Alto Microwave Tube Division, Microwave Components Operation before using this information for final equipment design.

2. These filters can be modified to meet other specifications and mate with standard flange configurations.

3. Peak power value applies with waveguide pressurization of 45 lbf/in^2a(3.15 kgf/cm^2a). Other permissible peak power values can be determined using the following standard conditions: (1) maximum peak power of 1.5 MW, (2) atmospheric pressure at an ambient temperature of 20°C, and (3) dry air dielectric. See "Relative Power" characteristic curves.

3571 9/76

Printed in U.S.A.

CHARACTERISTIC CURVES
Typical performance values

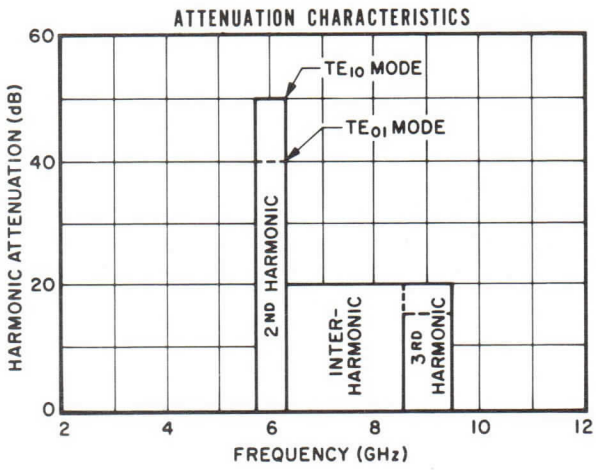

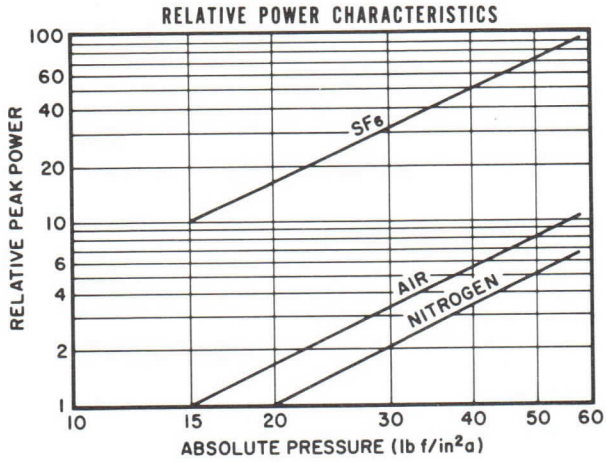

OUTLINE DRAWING

END VIEW—TYPICAL BOTH ENDS

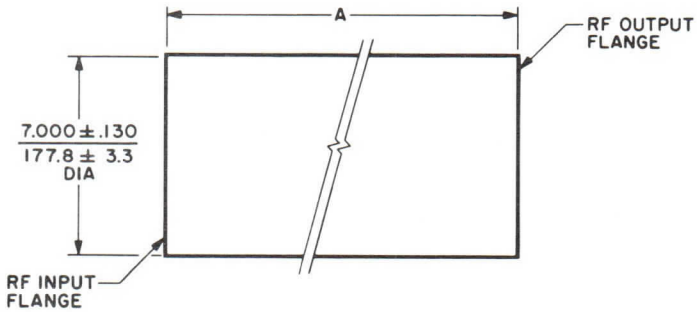

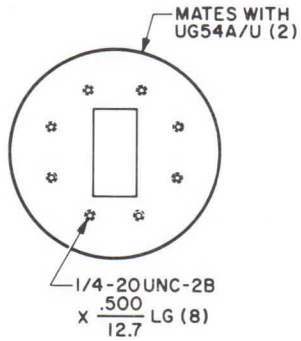

F284AA12

TYPE NUMBER	DIMENSION A	
	inch	mm
F284AA11	33.500±.060	850.9± 1.52
F284AA12	34.500±.060	876.3± 1.52

DIMENSIONS: ← inch / mm →

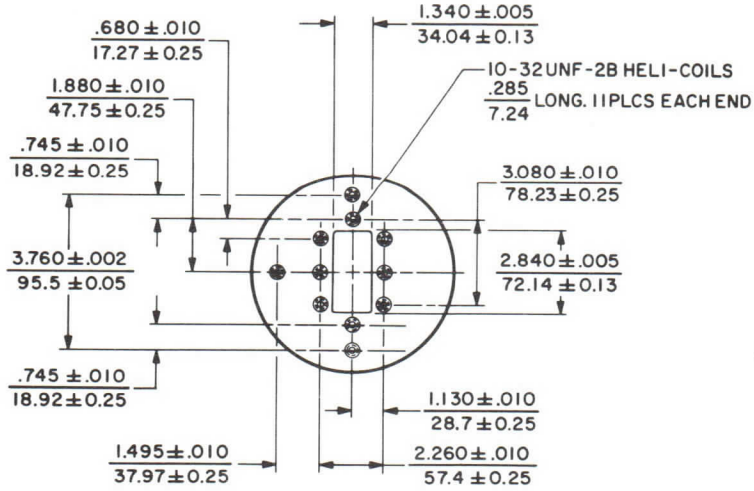

F284AA11

varian

TECHNICAL DATA

F284AA15
HIGH POWER S-BAND MICROWAVE FILTER
2.85-3.15 GHz
5 MW, peak
7 kW, average

DESCRIPTION

The F284AA15 low-pass harmonic filter is a straight, leaky-wall absorptive type for use in high-power transmitters operating between 2.85 and 3.15 gigahertz. The filter can handle about 5 megawatts peak power and 7 kilowatts average power. Insertion loss is less than 0.2 dB. Stopband attenuation is greater than 40 dB in the second harmonic and more than 20 dB in the third harmonic. For best performance, the filter should be installed near the transmitter tube in the waveguide line between the tube and antenna.

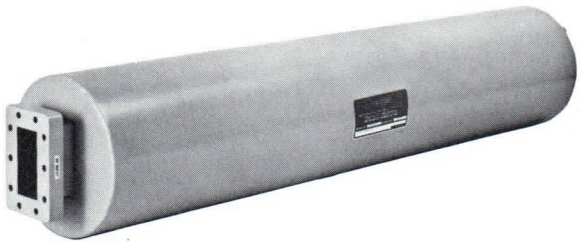

Each filter consists of a primary waveguide and arrays of terminated secondary waveguides mounted along the primary waveguide walls which absorb the harmonic signals. Sturdy construction assures reliable long-life performance. Modified versions can be supplied to meet special requirements.

GENERAL CHARACTERISTICS [1,2]

ELECTRICAL

Passband Frequency Range	2.85 to 3.15 GHz
Passband Power	
Peak[3]	5 MW
Average	7 kW
Passband Insertion Loss, max	0.2 dB
Passband VSWR, max	1.15:1
Stopband Attenuation, min	
5.8 to 6.2 GHz	40 dB
8.7 to 9.3 GHz	20 dB
11.6 to 12.4 GHz	15 dB

PHYSICAL

Dimensions	See Outline Drawing
Weight, approx	25 lb/11.3 kg
Cooling	Convection and Radiation
RF Connectors	See Outline Drawing
Pressurization	Factory tested to 35 lbf/in^{2}g(2.45 kgf/cm^{2}g)
Material	Aluminum

NOTES:

1. Characteristic values are based on performance tests. These figures may change without notice as the result of additional data or product refinement. Consult the Varian Palo Alto Microwave Tube Division, Microwave Components Operation before using this information for final equipment design.
2. These filters can be modified to meet other specifications and mate with standard flange configurations.
3. Peak power value applies with waveguide pressurization of 45 lbf/in^{2}a(3.15 kgf/cm^{2}a). Other permissible peak power values can be determined using the following standard conditions: (1) maximum peak power of 1.5 MW, (2) atmospheric pressure at an ambient temperature of 20°C, and (3) dry air dielectric. See "Relative Power" characteristic curves.

3604 9/76

Printed in U.S.A.

CHARACTERISTIC CURVES
Typical performance values

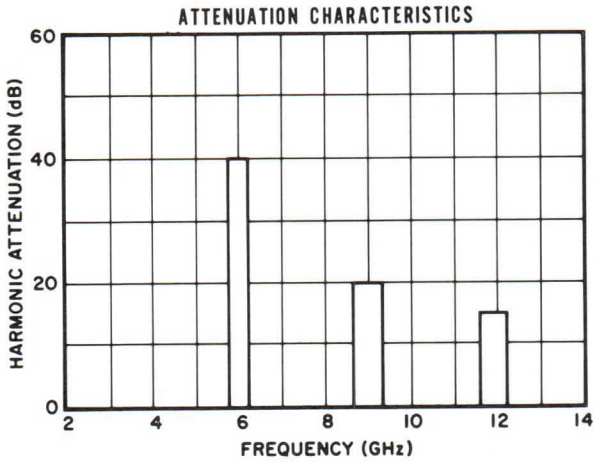

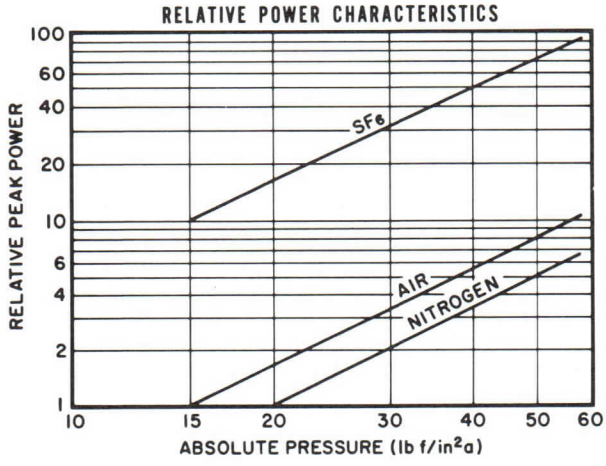

OUTLINE DRAWING

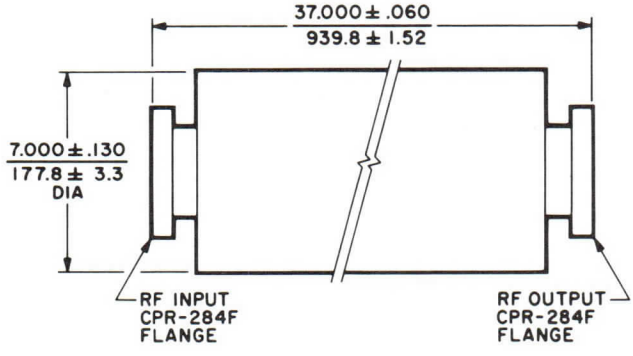

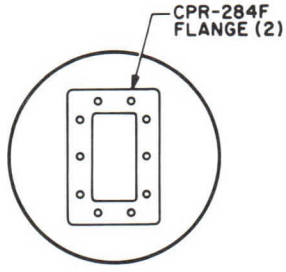

DIMENSIONS: ← inch / mm →

varian

TECHNICAL DATA

F284AB15

HIGH POWER S-BAND MICROWAVE FILTER

2.7-3.1 GHz
5 MW, peak
7 kW, average

DESCRIPTION

The F284AB15 low-pass harmonic filter is a straight, leaky-wall absorptive type for use in high-power transmitters operating between 2.7 and 3.1 gigahertz. The filter can handle about 5 megawatts peak power and 7 kilowatts average power. Insertion loss is less than 0.15 dB. Stopband attenuation is greater than 40 dB in the second harmonic and more than 25 dB in the third harmonic. For best performance, the filter should be installed near the transmitter tube in the waveguide line between the tube and antenna.

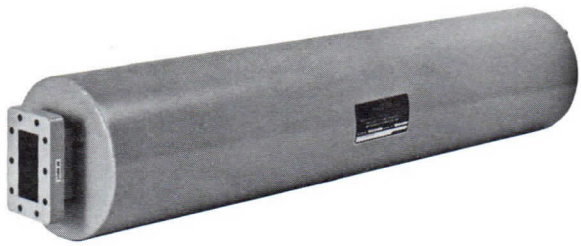

Each filter consists of a primary waveguide and arrays of terminated secondary waveguides mounted along the primary waveguide walls which absorb the harmonic signals. Sturdy construction assures reliable long-life performance. Modified versions can be supplied to meet special requirements.

GENERAL CHARACTERISTICS[1,2]

ELECTRICAL

Passband Frequency Range	2.7 to 3.1 GHz
Passband Power	
Peak[3]	5 MW
Average	7 kW
Passband Insertion Loss, max	0.2 dB
Passband VSWR, max	1.15:1
Stopband Attenuation, min	
5.8 to 6.2 GHz	40 dB
8.1 to 9.3 GHz	25 dB
10.8 to 12.4 GHz	15 dB

PHYSICAL

Dimensions	See Outline Drawing
Weight, approx	25 lb/11.3 kg
Cooling	Convection and Radiation
RF Connectors	See Outline Drawing
Pressurization	Factory tested to 35 lbf/in^2g(2.45 kgf/cm^2g)
Material	Aluminum

NOTES:

1. Characteristic values are based on performance tests. These figures may change without notice as the result of additional data or product refinement. Consult the Varian Palo Alto Microwave Tube Division, Microwave Components Operation before using this information for final equipment design.
2. These filters can be modified to meet other specifications and mate with standard flange configurations.
3. Peak power value applies with waveguide pressurization of 45 lbf/in^2a(3.15 kgf/cm^2a). Other permissible peak power values can be determined using the following standard conditions: (1) maximum peak power of 1.5 MW, (2) atmospheric pressure at an ambient temperature of 20°C, and (3) dry air dielectric. See "Relative Power" characteristic curves.

3605 9/76

Printed in U.S.A.

CHARACTERISTIC CURVES

Typical performance values

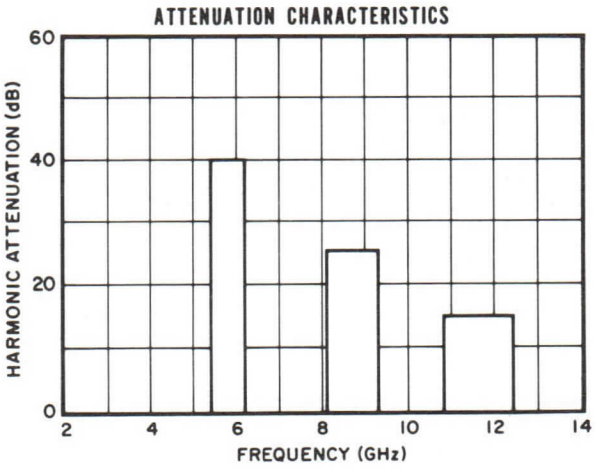

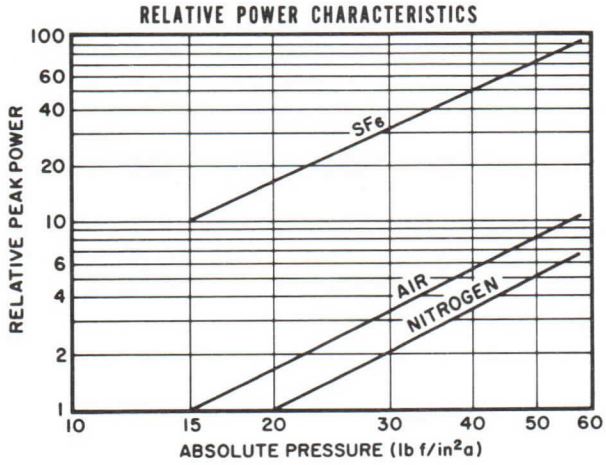

OUTLINE DRAWING

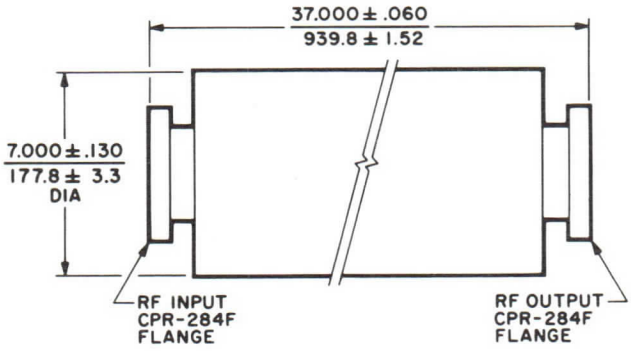

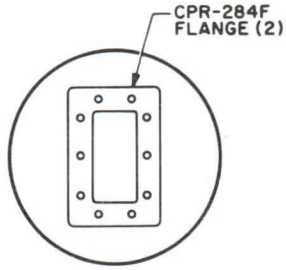

DIMENSIONS: ← inch / mm →

varian
palo alto tube division

TECHNICAL DATA

F284BA1

HIGH POWER MICROWAVE FILTER

3.18-3.22 GHz
3 MW, peak
5 kW, average

DESCRIPTION

The F284BA1 is a harmonic filter of the spiral leaky-wall type. It absorbs undesirable (higher than second) harmonics that are generated by a microwave transmitter while introducing a minimum of passband attenuation. This filter, normally located near the transmitting tube in the line between the tube and the antenna, reduces RF interference and increases the power-handling capability of the waveguide transmission line.

The primary feature and advantage of the F284BA1 filter is that it provides increasing attenuation for all higher harmonics. Its primary application is to supplement existing second harmonic filters by providing attenuation for all higher harmonics. This allows microwave transmitters to operate with a minimum of interference to neighboring systems.

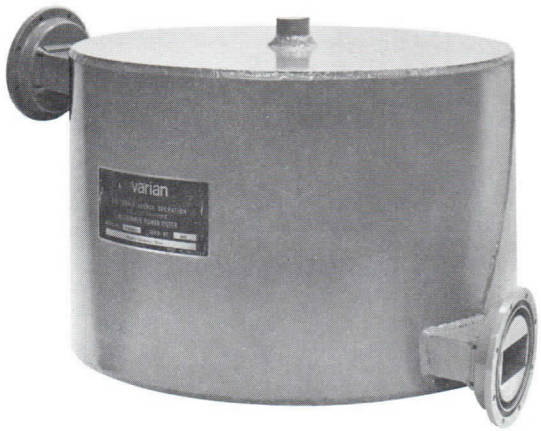

GENERAL CHARACTERISTICS [1,2]

ELECTRICAL

Passband Frequency Range	3.18 to 3.22 GHz
Power Handling, peak [3]	3 MW
Power Handling, average	5 kW
Insertion Loss, max [4]	0.4 dB
Passband VSWR, max	1.15:1
Stopband Attenuation, min [5]	
3rd Harmonic	50 dB
4th Harmonic	50 dB
5th Harmonic	50 dB
6th Harmonic	50 dB
7th Harmonic	50 dB
Stopband VSWR, max	2.0:1

PHYSICAL

Dimensions, approx	See Outline Drawing
Weight, approx	
Net	60 lb
Shipping, domestic commercial	100 lb
Operating and Mounting Position	Any
Waveguide Size	WR284
RF Connectors	
Input and Output	UG-585/U Choke Flanges
Standard Finishes [6]	
Waveguide Interior and Flange Surfaces	Iridited Aluminum
Exterior Paint	To be specified
Pressurization, max [7]	30 lbf/in^{2}g
Cooling	Convection and Radiation

ENVIRONMENTAL [8]

Temperature Range	
Operating	-54 to +71 °C
Non-operating and Storage	-62 to +71 °C
Altitude, above sea level, max	
Operating [9]	15,000 ft
Non-operating and Storage	50,000 ft
Shock	Drop test par. 4.12.6, MIL-E-4970A
Vibration	Par. 4.6.8, MIL-E-4970A
Humidity	Method 103A, Condition B, MIL-STD-202B
Salt Atmosphere	Method 101A, Condition B, MIL-STD-202B
Fungus Resistance	Fabricated from non-nutrient materials

2828 10/72

Printed in U.S.A.

F284BA1

CHARACTERISTIC CURVE
Typical Performance Values

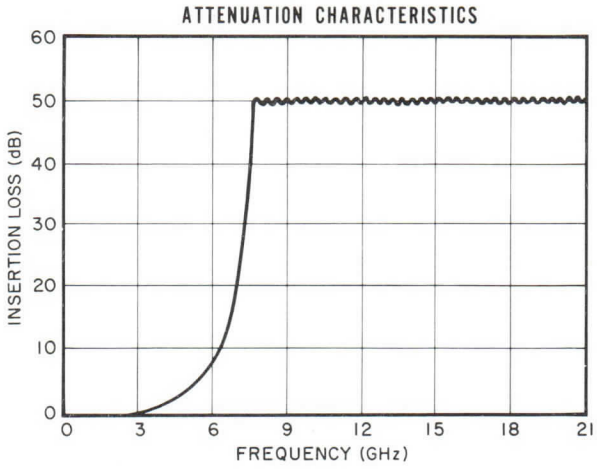

NOTES:

1. Characteristic values are based on performance tests. These figures may change without notice as a result of additional data or product refinement. Varian Associates should be consulted before using this information for equipment design.
2. This filter can be modified to meet other specifications.
3. Value applies with waveguide pressurization of 45 lbf/in^{2}a. Other permissible peak power values can be determined using the following standard conditions: (1) maximum peak power of 430 kW, an average power of 5 kW, (2) atmospheric pressure at an ambient temperature of 20°C, and (3) dry air dielectric.
4. Measured in the TE_{10} mode.
5. Measured in the TE_{10} and TE_{01} modes.
6. Other finishes are available on special order.
7. The F284BA1 has been pressure tested at 30 lbf/in^{2}g.
8. Unless otherwise specified, environmental characteristics are for non-operating and storage conditions.
9. For high-altitude operation, the filter must be pressurized.

OUTLINE DRAWING

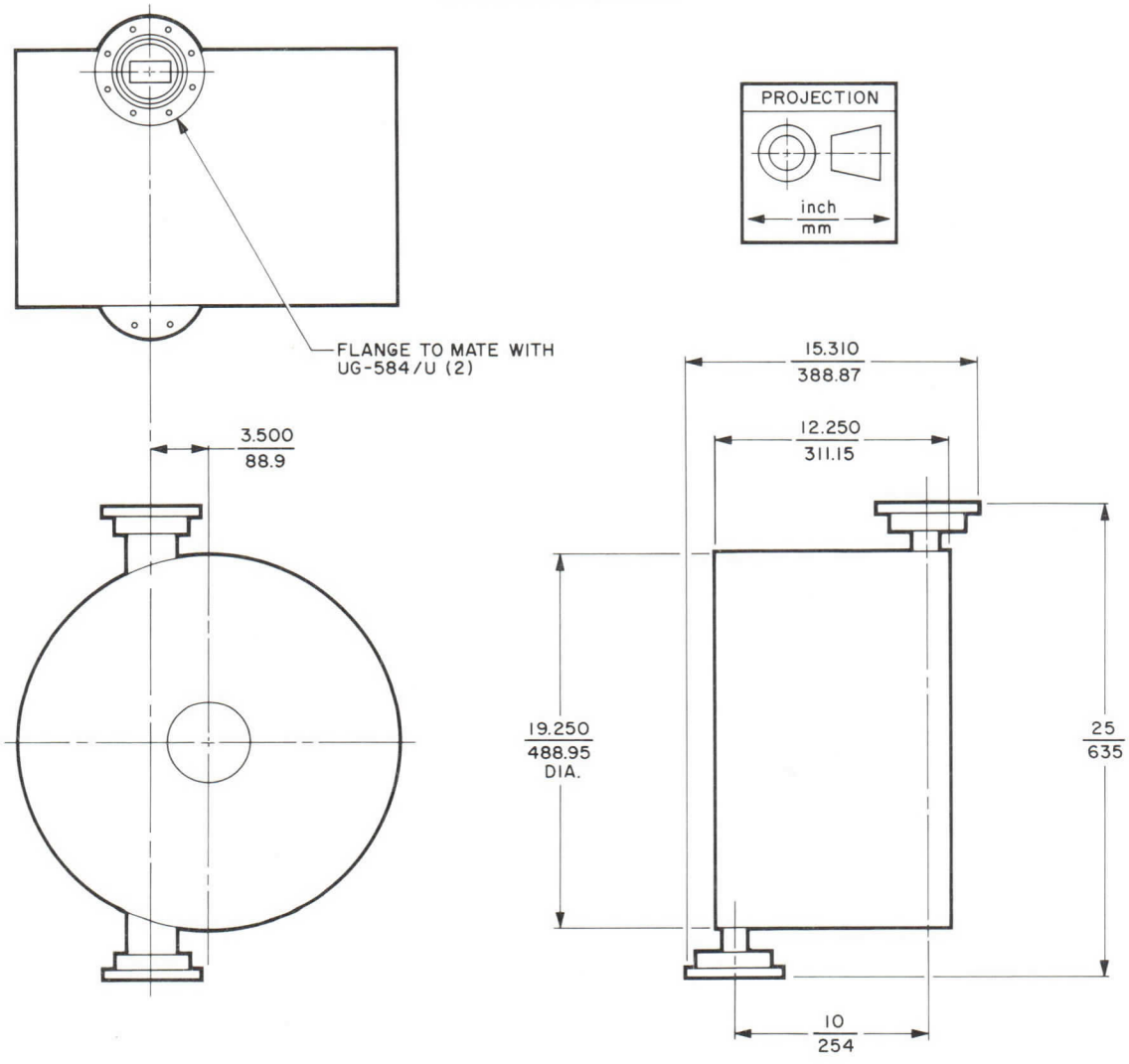

varian

HIGH POWER MICROWAVE FILTER

DATA SHEET

F284FA2
6-66

DESCRIPTION

The F284FA2 is a single-section low-pass filter of the reactive type. It introduces a large reactive impedance to undesirable spurious signals generated by a microwave transmitter while introducing a minimum of passband attenuation. This filter is located normally near the transmitting tube in the line between the tube and the antenna.

This reactive type filter uses multiple shorted stubs to attenuate spurious signals which occur at frequencies above the passband. It is rugged, compact and easily fabricated.

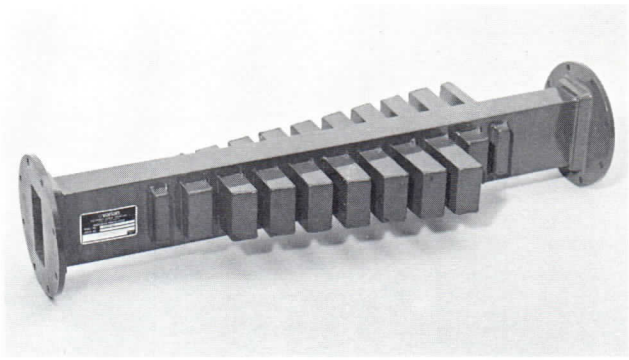

RATINGS

	Frequency (GHz)	Attenuation (dB) Note 1	Max VSWR	Power - Note 2		
				Peak (MW)	Duty	Avg (kW)
Passband	2.70 - 2.90	0.10 max	1.10	6	0.001	40
Stopband	3.10 - 3.15	10 min	Note 4	3		
	3.15 - 3.20	30 min	Note 4	3		
	3.20 - 3.25	50 min	Note 4	1		
	3.25 - 3.70	70 min	Note 4	1.5		
	3.70 - 3.90	30 min	Note 4	2		

FEATURES

- Reactive filtering of spurious signals between fundamental and second harmonic
- Multiple shorted stubs principle
- High power
- Low passband loss
- High stopband loss
- Rugged brazed aluminum construction
- Lightweight

MECHANICAL

Mounting position	Any
Waveguide size.....	WR-284
RF connectors	See outline
Length, in., approx	24
Weight, lb, approx	4.2
Pressure, capability, psig, max (Note 3) ...	30
Cooling.....	Convection and radiation
Finish	Silver gray hammertone

TYPICAL CHARACTERISTICS

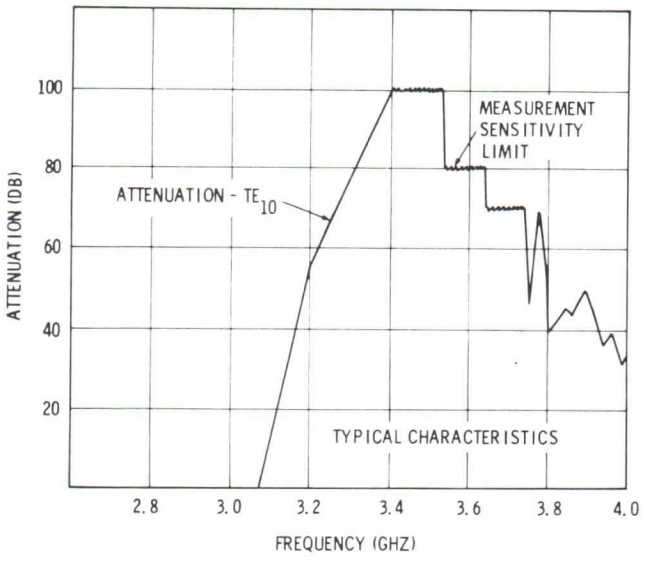

ENVIRONMENTAL

This rugged brazed aluminum filter is suitable for use in severe environments. Filters to meet specific environmental requirements are available on request.

NOTES

1. Attenuation ratings are measured for the TE_{10} mode in the passband and the TE_{10} and TE_{01} modes in the stopband.

2. The specified power ratings are for waveguide pressurization of 45 pounds per square inch absolute. Power ratings for other conditions may be determined from the following "standard" ratings and conditions: (1) passband power 0.85 megawatts peak, maximum; duty 0.001 maximum, (2) pressurization 14.7 pounds per square inch absolute, (3) ambient temperature 20°C, and (4) dry air dielectric.

3. This filter is factory tested to 45 pounds per square inch gauge.

4. The VSWR measured in the stopband of a reactive filter corresponds to almost complete reflection of incident power.

OUTLINE DRAWING

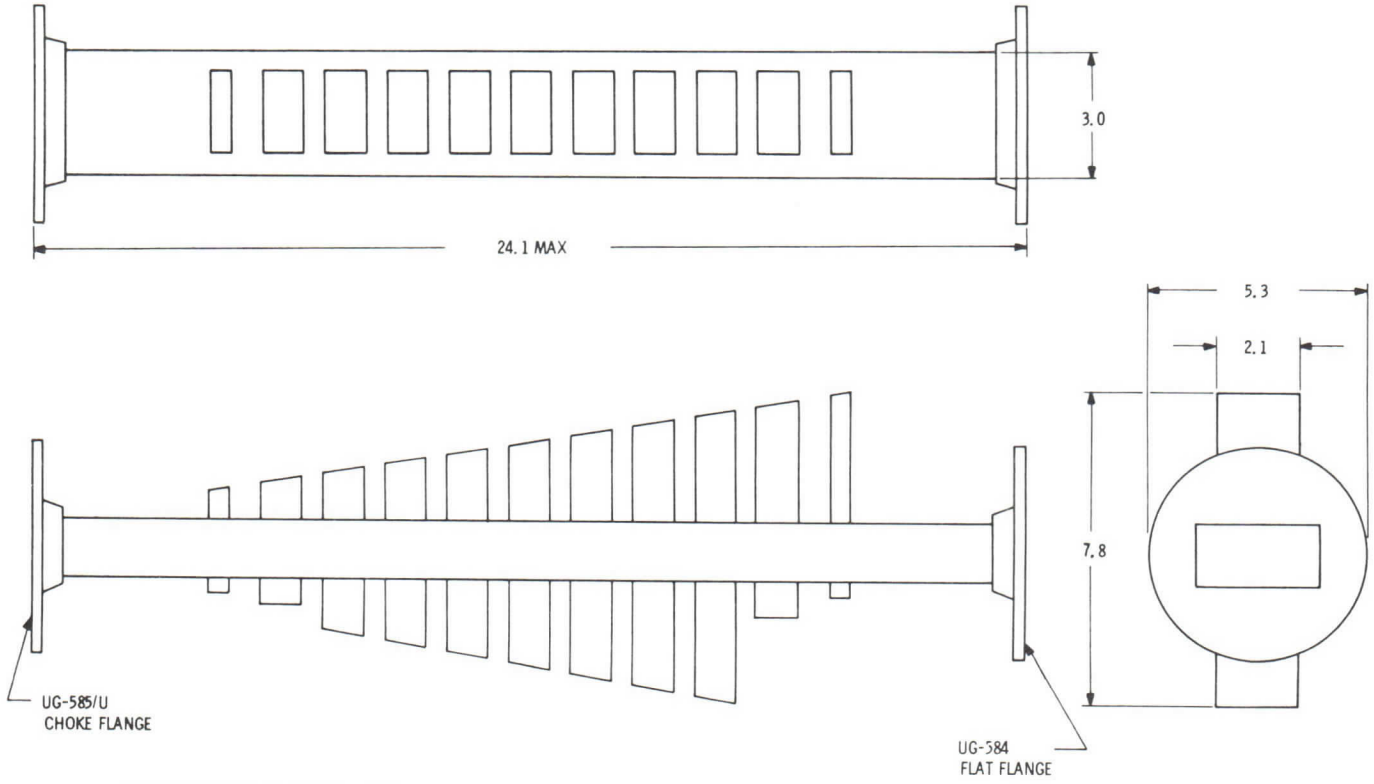

DIMENSIONS ARE IN INCHES; THOSE WITHOUT TOLERANCES ARE APPROXIMATE.

Printed in U.S.A.

varian
palo alto tube division

TECHNICAL DATA

F284GA2

HIGH POWER MICROWAVE FILTER

2.9-4.0 GHz
20 kW

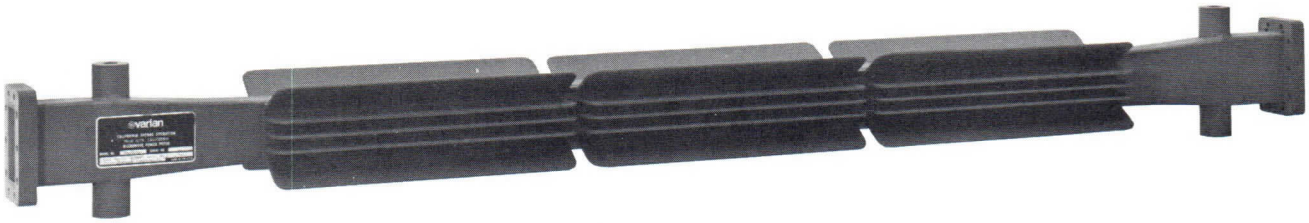

DESCRIPTION

The F284GA2 is a single-section, high-pass, reactive filter. It is ideal for use in high-power S-band transmitters requiring the suppression of spurious signals below the passband. The outstanding feature of this filter is its cutoff frequency of 2.6 gigahertz, which is less than 1.5 percent below the passband. Passband loss is less than 0.3 decibel between 2.9 and 4.0 gigahertz; stopband attenuation is greater than 60 decibels at frequencies below 2.82 gigahertz. It can handle a peak power of 3 megawatts and an average power of 20 kilowatts. For best performance, the filter should be installed near the transmitting tube in the waveguide transmission line between the tube and antenna.

The F284GA2 consists of a cutoff section of waveguide having tapered sections at each end. These sections provide both mechanical and electrical transition to WR284 waveguide. Sturdy welded aluminum-alloy construction is lightweight and assures long trouble-free life. Modified versions can be supplied to meet special requirements.

GENERAL CHARACTERISTICS

ELECTRICAL

PASSBAND CHARACTERISTICS					STOPBAND CHARACTERISTICS			
Frequency Range (GHz)	Power Peak[1] (MW)	Power Average (kW)	Maximum Insertion Loss[2] (dB)	Maximum VSWR	Frequency Range (GHz)	Minimum Attenuation (dB)	Maximum VSWR	Peak Power Capacity (MW)
2.900-2.925	3	20	0.3	1.2:1	0-2.82	60		---
2.925-3.100	3	20	0.2	1.2:1	2.82-2.84	40	note[3]	3[4]
3.100-4.000	3	20	0.15	1.2:1	2.84-2.85	25		3[4]

PHYSICAL

Dimensions ..... See Outline Drawing
Weight, approx ..... 25 lb
Operating and Mounting Position ..... Any
Waveguide Size WR284
RF Flanges ..... Mate with CPR284F

Standard Finishes[5]
Waveguide and
Flange Surfaces ..... Iridited Aluminum
Exterior ..... Federal Standard 595
Black Epoxy No. 17038
Pressurization, max[6] ..... 45 lbf/in^{2}g
Cooling ..... Convection and Radiation

2829 7/72

Printed in U.S.A.

GENERAL CHARACTERISTICS

ENVIRONMENTAL [7]

Temperature Range ..... Per MIL-E-4970A, par. 4.1 and 4.2
- Operating ..... -54 to +71 °C
- Non-operating and Storage ..... -52 to +71 °C

Altitude,
- above sea level, max .... Per MIL-E-4970A, par. 4.4 Procedure II
- Operating [8] ..... 15,000 ft
- Non-operating and Storage ..... 50,000 ft

Shock ..... Drop test per par. 4.12.6, MIL-E-4970A

Vibration ..... Per MIL-STD-167
- Amplitude
  - 5 to 15 Hz ..... 0.06 in
  - 16 to 25 Hz ..... 0.04 in
  - 26 to 33 Hz ..... 0.02 in

Humidity ..... Per Method 103A, Condition B, MIL-STD-202B

Salt Atmosphere ..... Per Method 101A, Condition B, MIL-STD-202B

Fungus Resistance ..... Fabricated from non-nutrient materials

CHARACTERISTIC CURVE

Typical performance values

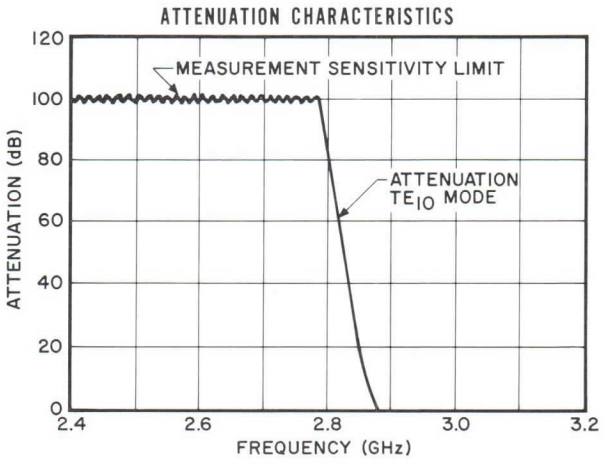

NOTES:

1. Value applies with waveguide pressurization at 45 lbf/in^{2}a. Other permissible peak power values can be determined using the following "standard" conditions: (1) maximum passband peak power of 0.33 MW maximum duty of 0.01, (2) pressurization of 14.7 lbf/in^{2}a, (3) ambient temperature of 20°C, and (4) dry air dielectric.
2. Measured in the TE_{10} mode.
3. In a reactive filter, the VSWR corresponds to almost complete reflection of incident power.
4. This value is difficult to calculate because the complex propagation characteristic of the transitions, which varies greatly with frequency. No breakdowns have occured in operation, even with 3-MW spurious signals in very short pulse.
5. Other finishes are available on special order.
6. The F284GA2 is pressure tested to 45 lbf/in^{2}g at the factory.
7. Unless otherwise specified, environmental characteristics are for non-operating and storage conditions.
8. For high-altitude operation, the filter must be pressurized at 45 lbf/in^{2}a.

OUTLINE DRAWING

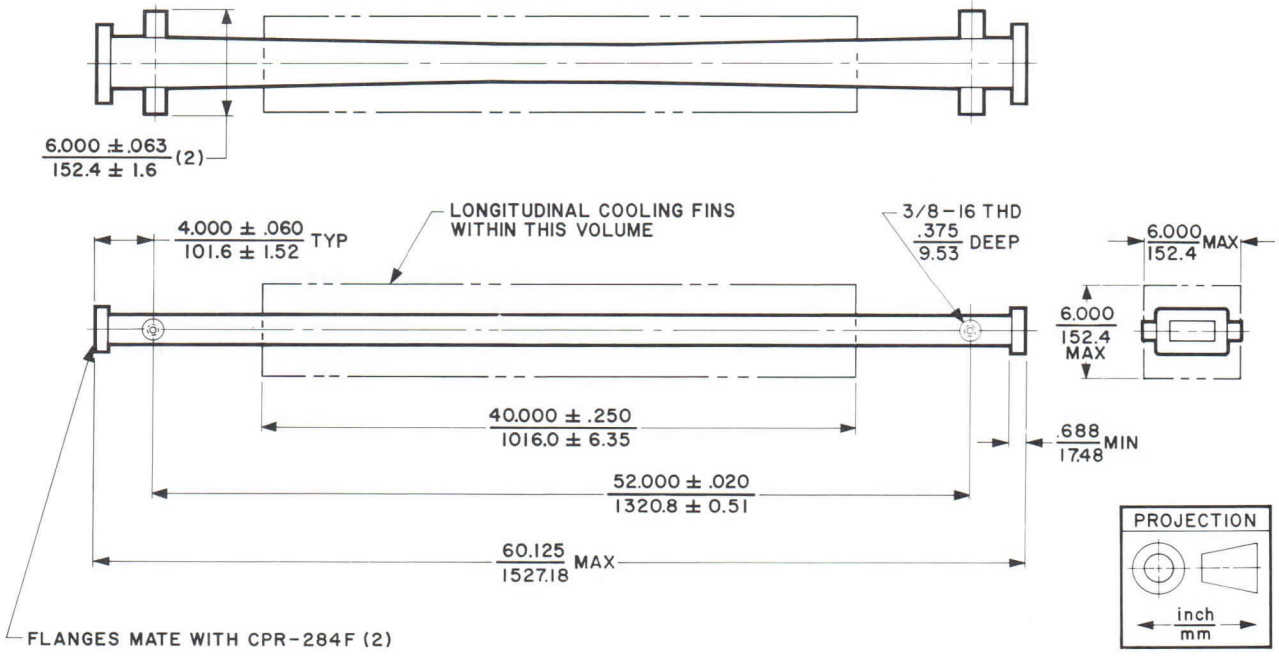

varian
palo alto tube division

TECHNICAL DATA

F284GA3

HIGH POWER MICROWAVE FILTER

2.7-2.9 GHz

6 MW, peak
6 kW, average

DESCRIPTION

The F284GA3 is a single-section high-pass filter of the reactive type. It introduces a large reactive impedance to undesirable spurious signals generated by a microwave transmitter while introducing a minimum of passband attenuation. Applications are in transmitters where suppression of below passband spurious emissions is required.

This reactive-type filter consists of a cutoff section of waveguide with tapered sections at each end. These sections provide a mechanical and electrical transition to WR284 waveguide.

Features of the F284GA3 filter are: reactive filtering of spurious signals, high-power, high stopband loss, rugged welded aluminum-alloy construction, and light weight.

This filter is located normally near the transmitting tube in the line between the tube and the antenna.

GENERAL CHARACTERISTICS [1,2]

ELECTRICAL

Circuit	Frequency (GHz)	Attenuation [3] (dB)	VSWR Max	Power [4]
Passband	2.7-2.9	0.15 max	1.20:1	6 MW peak 0.001 Duty 6 kW average
Stopbands	dc-2.45 2.45-2.55 2.55-2.60	100 min 50 min 10 min	Note 5 Note 5 Note 5	--- 3 MW peak 3 MW peak

PHYSICAL

Dimensions, approx. ..... See Outline Drawing
Weight, approx. ..... 8 lb
Operating and Mounting Position ..... Any
Waveguide Size WR284
RF Connectors ..... Mates with flat flange UG-584/U
Standard Finishes [6]
  Waveguide Interior ..... Iridited aluminum
  Flange Surfaces ..... Iridited aluminum
  Exterior ..... Fed. Std. 595-Black Enamel No. 17038; MIL-STD-171 Class B
Pressurization [7], min. ..... 30 lbf/in^{2}g
Cooling ..... Convection and radiation

ENVIRONMENTAL

Temperature
  Operating ..... -54 to +71 °C
  Non-operating and storage ..... -62 to +71 °C
Altitude, [8] maximum
  Operating ..... 15,000 ft
  Non-operating and storage ..... 50,000 ft
Shock ..... Drop test, per par. 4.12.6 MIL-E-4970A
Vibration MIL-STD-167
  Non-operating and storage
    5 to 15 Hz ..... 0.06 inch D.A.
    16 to 25 Hz ..... 0.04 inch D.A.
    26 to 33 Hz ..... 0.02 inch D.A.
Humidity ..... Method 103A, Condition B MIL-STD-202B
Salt Atmosphere ..... Method 101A, Condition B MIL-STD-202B
Fungus Resistance ..... Fabricated from non-nutrient materials

2830 7/72

Printed in U.S.A.

F284GA3

CHARACTERISTIC CURVE
Typical performance values

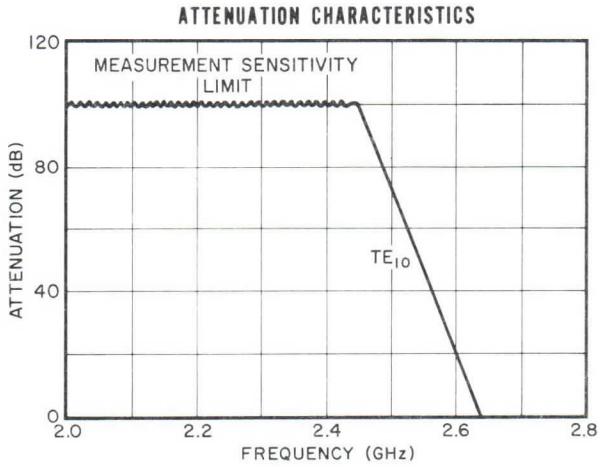

NOTES:

1. Characteristic values are based on performance tests. These figures may change without notice as a result of additional data or product refinement. Varian Associates should be consulted before using this information for equipment design.

2. F284GA3 can be modified to meet other specifications.

3. Attenuation ratings are measured for the TE_{10} mode in the passband and the TE_{10} and TE_{01} modes in the stopband.

4. The specified power ratings are for waveguide pressurization of 45 lbf/in^{2}a. Power ratings for other conditions may be determined from the following standard ratings and conditions: (1) passband power 0.84 MW peak, maximum; duty 0.01 maximum, (2) pressurization 14.7 lbf/in^{2}a, (3) TA 20°C, and (4) dry air dielectric.

5. In a reactive filter, the VSWR corresponds to almost complete reflection of incident power. Stopband power ratings are based on theoretical values for WR284 waveguide terminated in a short circuit. Below 2.7 GHz power handling rapidly decreases as the cutoff value for this waveguide is approached.

6. Standard finishes are supplied unless otherwise specified.

7. This filter is factory tested to 40 lbf/in^{2}g.

8. For the altitude-operating rating, the filter must be pressurized as specified in Note 4.

OUTLINE DRAWING

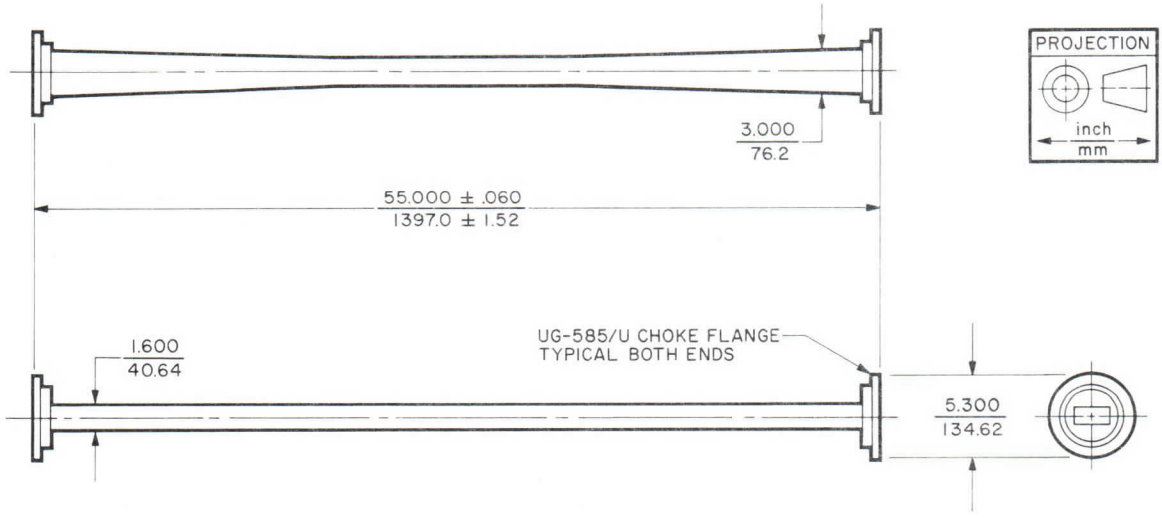

varian

HIGH POWER MICROWAVE FILTER

DATA SHEET

F284HA1

DESCRIPTION

The F284HA1 is a filter kit which is composed of both absorptive and reactive filters. It is made up of five separate filters with mounting hardware and connecting waveguides. This filter kit reduces RF interference by suppressing both harmonic energy and spurious outputs which are near the fundamental operating band.

The harmonic outputs are attenuated mainly by absorptive filters, which are of the leaky-wall type. These absorptive filters consist of a primary waveguide to which small secondary waveguides are connected. The small secondary waveguides couple to and absorb the harmonic energy.

The spurious outputs, near the passband, are rejected by a high pass filter and a low pass filter, both of the reactive type.

Normal location of the filter kit is near the transmitting tube of a pulsed radar, in the line between the tube and the antenna.

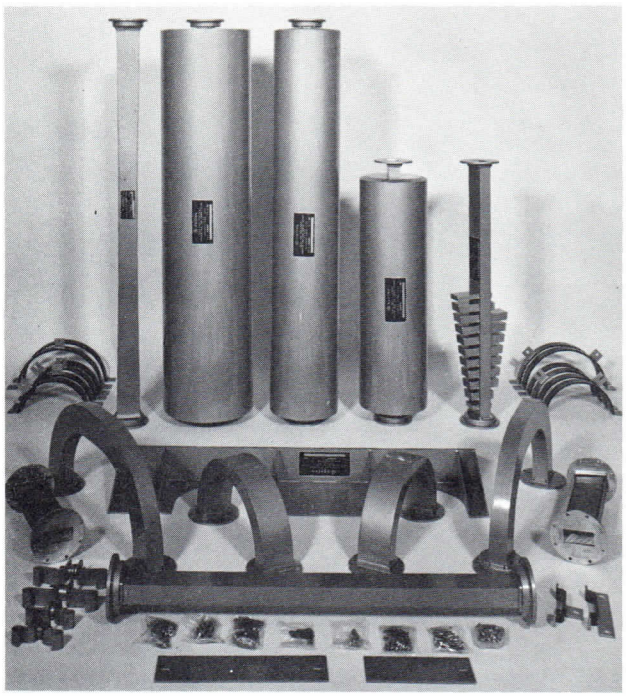

CHARACTERISTICS[6]

ELECTRICAL

PASSBAND CHARACTERISTICS					STOPBAND CHARACTERISTICS			
Frequency Range	Power		Maximum Insertion Loss	Maximum VSWR	Minimum Attenuation[2] for Frequency Ranges in GHz			
	Peak[1]	Average			DC-2.56 3.15-14.0	DC-2.55 3.20-12.0	DC-2.54 3.20-11.0	DC-2.52 3.3-9.0
(GHz)	(MW)	(kW)	(dB)		(dB)	(dB)	(dB)	(dB)
2.70-2.90	5	5	0.7	1.30:1	30	40	50	60

PHYSICAL

Dimensions, approximate .... See Outline Drawing
Weight, approximate
  Net ..... 300 lb
  Shipping, domestic commerical, approx.. 450 lb
Waveguide Size WR-284
RF Connectors
  Input and Output ..... Mate with UG-53/U or UG-584/U Cover Flanges
Standard Finishes[3]
  Waveguide Interior and Flange Surfaces ..... Iridited Aluminum
  Exterior Paint .....Blue hammertone
Pressurization, maximum[4] ..... 35 lbf/in^{2}g
Cooling ..... Convection and Radiation

ENVIRONMENTAL[5]

Temperature Range
  Operating ..... -54 to +71 °C
  Non-operating and Storage ..... -62 to +71 °C
Altitude, above sea level, maximum
  Operating[1] ..... 50,000 ft
  Non-operating and Storage ..... 50,000 ft
Shock.... Drop test per par. 4.12.6, MIL-E-4970A
Vibration.....Per par. 4.6.8, MIL-E-4970A
Humidity ..... Per Method 103A, Condition B, MIL-STD-202B
Salt Atmosphere ... Per Method 101A, Condition B, MIL-STD-202B
Fungus Resistance ... Fabricated from non-nutrient materials

Pub. 1717 4/67

Printed in U.S.A.

NOTES:

1. Value applies with waveguide pressurization of 45 lbf/in^{2}a. Other permissible peak power values can be determined using the following "standard" conditions: (1) maximum peak power of 500 kW and average power of 5 kW, (2) atmospheric pressure at an ambient temperature of 20°C, and (3) dry air dielectric.
2. Measured in the TE_{10} and TE_{01} modes above 4.0 GHz.
3. Other finishes are available on special order.
4. The F284HA1 is pressure tested to 35 lbf/in^{2}g at the factory.
5. Unless otherwise specified, environmental characteristics are for non-operating and storage conditions.
6. This filter can be modified to meet other specifications.

CHARACTERISTIC CURVES

TYPICAL STOP-BAND ATTENUATION

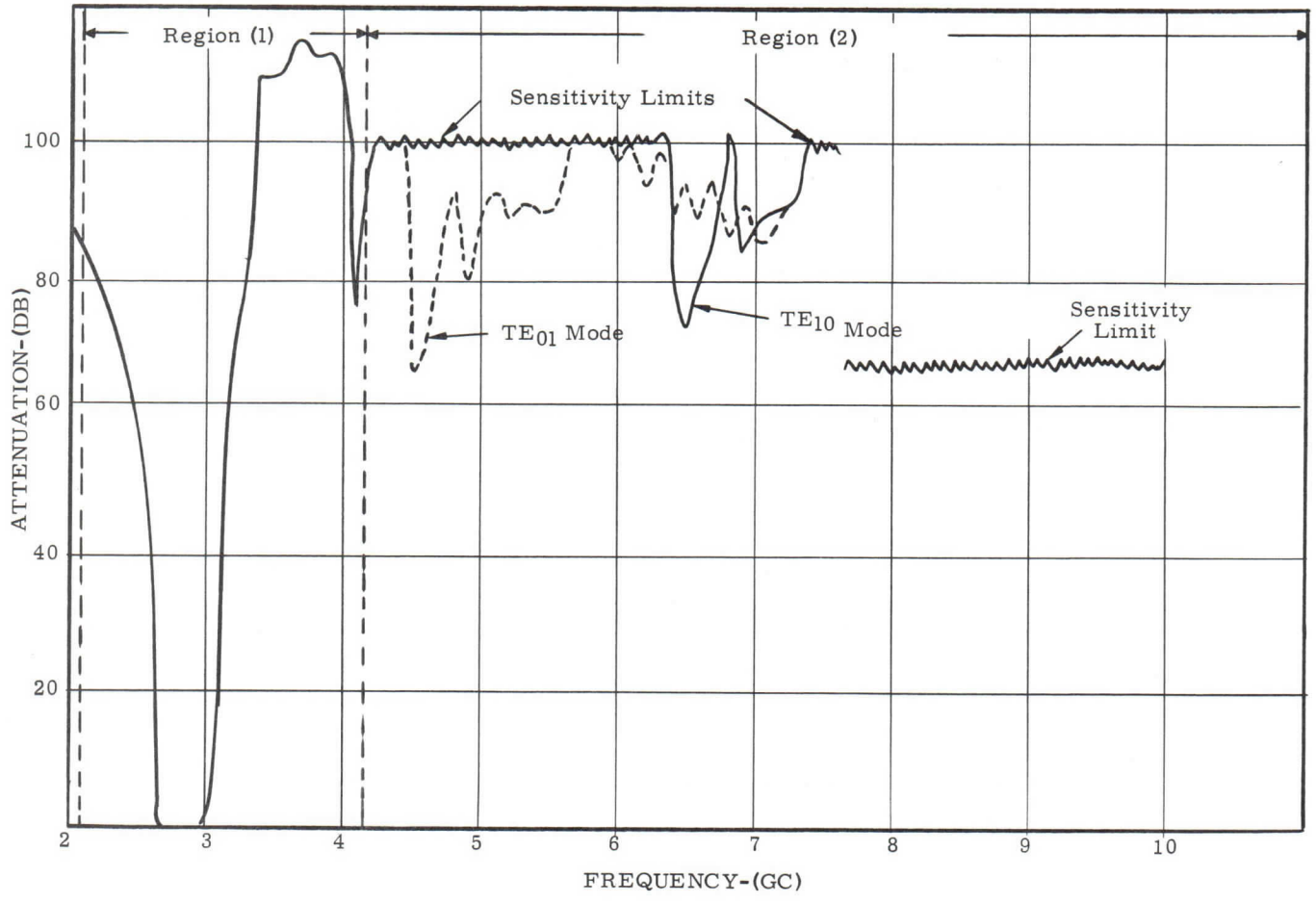

OUTLINE DRAWING

NOTE:

Refer to the following filters for outline drawings:

F284AA1

F284AA5

F284AA6

F284FA1

F284GA3

varian

HIGH POWER MICROWAVE FILTER

DATA SHEET

F430CA7
6-66

DESCRIPTION

The F430CA7 is a single-section harmonic filter of the reactive type. It introduces a large reactive impedance to undesirable spurious signals generated by a microwave transmitter while introducing a minimum of passband attenuation. This filter is located normally near the transmitting tube in the line between the tube and the antenna.

This reactive-type filter uses variable-impedance waveguide and is referred to as a waffle-iron filter because of its waffle-iron-like construction. It allows only the dominant mode to propagate over the entire stopband and is rugged, compact, and easily fabricated.

RATINGS

	Frequency (GHz)	Attenuation (dB) Note 1	Max VSWR	CW Power (kW) Note 2
Passband	1.75 - 2.40	0.2 max	1.35	12
Stopbands	3.5 - 4.8	60 min		
	4.8 - 7.2	50 min		
	7.2 - 8.8	40 min		
	8.8 - 9.6	30 min		

FEATURES

- Reactive filtering of harmonics and spurious signals
- Waffle-iron principle
- High power
- Low passband loss
- High stopband loss
- Rugged dip brazed aluminum construction
- Lightweight and small size

MECHANICAL

Mounting position	Any
Waveguide size	WR-430
RF connectors	See outline
Length, in., approx	38
Weight, lb., approx	23
Pressure capability, psig, max	30
Cooling	Convection and radiation
Finish	Silver gray hammertone

TYPICAL CHARACTERISTICS

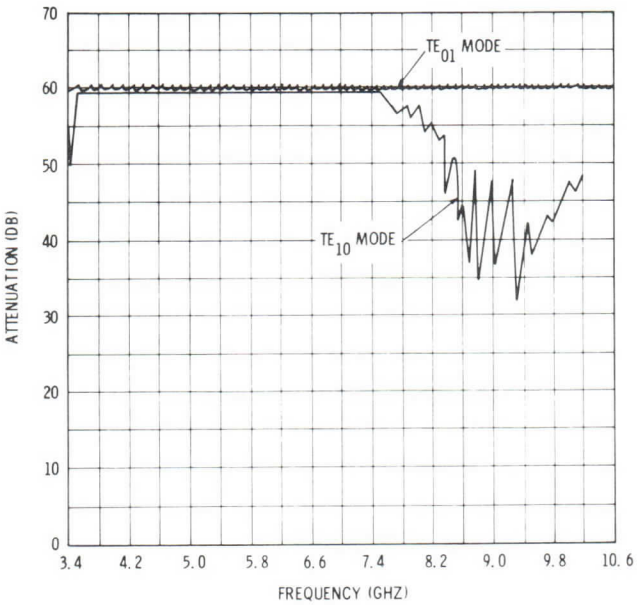

ENVIRONMENTAL

This rugged dip brazed aluminum filter is suitable for use in severe environments. Filters to meet specific environmental requirements are available on request.

NOTES

1. Attenuation ratings are measured for the TE_{10} mode in the passband and the TE_{10} and TE_{01} modes in the stopband.

2. The specified power rating is for pressurization with dry air at 14.7 psia.

OUTLINE DRAWING

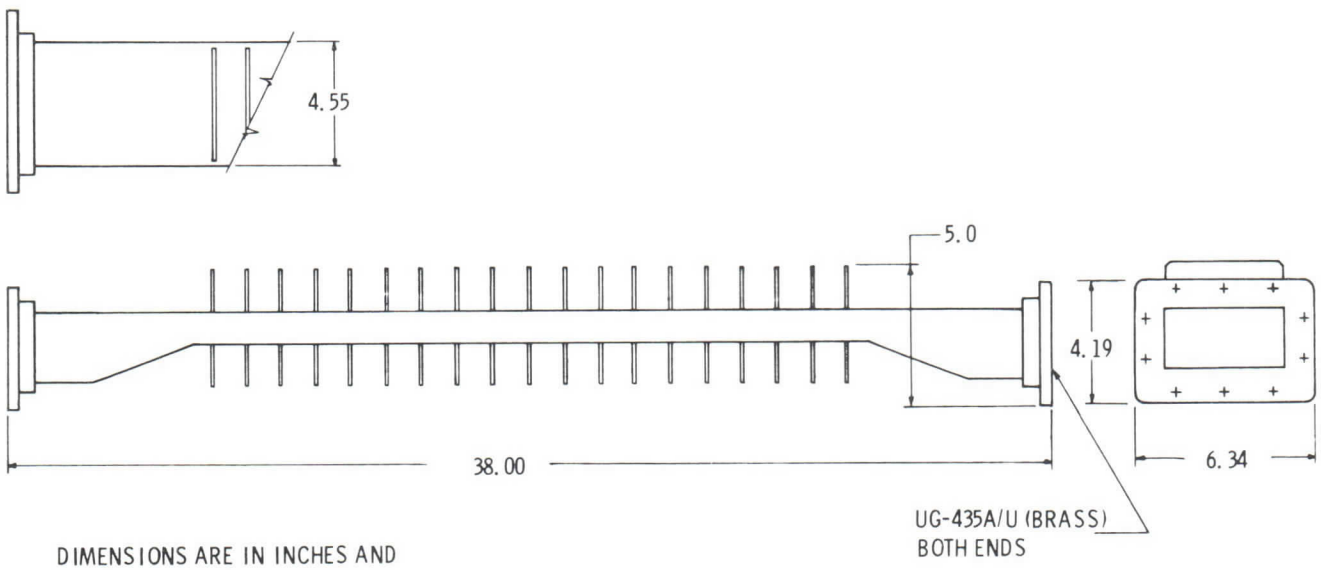

DIMENSIONS ARE IN INCHES AND
ARE APPROXIMATE.

varian
palo alto tube division

TECHNICAL DATA

F650AA1

HIGH POWER MICROWAVE FILTER

1.25-1.35 GHz
16.5 MW, peak
75 kW, average

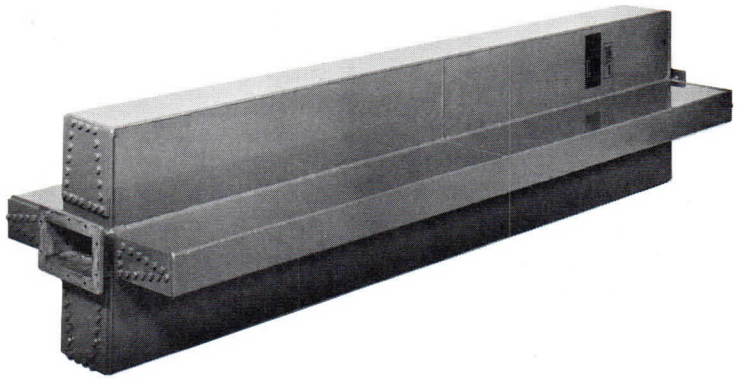

DESCRIPTION

The F650AA1 is a straight leaky-wall, absorptive harmonic filter for use with high power L-band radar transmitters requiring optimum spurious harmonic-energy suppression. Passband loss is less than 0.15 dB between 1.25 and 1.35 gigahertz, yet second-harmonic attenuation is at least 45 dB. It can handle a peak power of 16.5 megawatts at 0.0045 duty. For best performance, the filter should be installed near the transmitting tube in the waveguide transmission line between the tube and antenna. The F650AA1 consists of a primary waveguide and arrays of terminated secondary waveguides mounted along the primary waveguide walls. The primary waveguide serves as the highpower bandpass element; the secondary waveguide terminations absorb the harmonic signals. Sturdy welded and dip-brazed construction assures long, trouble-free life.

GENERAL CHARACTERISTICS[1, 2]

ELECTRICAL

Passband Frequency Range	1.25 to 1.35 GHz
Power Handling, peak[3]	16.5 MW
Power Handling, average	75 kW
Insertion Loss, maximum[4]	0.15 dB
Passband VSWR, maximum	1.15:1
Stopband Attenuation, minimum[5]	
2.5 - 2.9 GHz	45 dB
2.9 - 3.7 GHz	25 dB
3.7 - 4.6 GHz	30 dB
4.6 - 5.4 GHz	20 dB
5.4 - 6.2 GHz	15 dB
Stopband VSWR, maximum	1.5:1
Stopband Average Power Absorption	
2.5 - 3.7 GHz	120 W
3.7 - 4.6 GHz	100 W
4.6 - 6.2 GHz	80 W

PHYSICAL

Dimensions, approximate	See Outline Drawing
Weight, approximate	
Net	260 lb
Shipping, domestic commercial	325 lb
Operating and Mounting Position	Any
Waveguide Size	WR650
RF Connectors	
Input and Output	Mate with UG-418A/U Flat Flanges
RF Seals Required	
Input and Output	Parker Type 5600-60, or equivalent
Standard Finishes[6]	
Waveguide Interior & Flange Surfaces	Iridited Aluminum
Exterior	Fed. Std. 595-Grey Enamel No. 26132 MIL-STD-171 Class B
Pressurization, maximum[7]	20 lbf/in^{2}g
Cooling	Convection and Radiation

2831 9/72

Printed in U.S.A.

F650AA1

GENERAL CHARACTERISTICS[1,2]

ENVIRONMENTAL[8]

Temperature Range
- Operating ..... -54 to +71 °C
- Non-operating and Storage ... -62 to +71 °C

Altitude, above sea level, maximum
- Operating[9] ..... 15,000 ft
- Non-operating and Storage ..... 50,000 ft

Shock ..... Drop test per par. 4.12.6, MIL-E-4970A

Vibration ..... Per par. 4.6.8, MIL-E-4970A

Humidity ..... Per Method 103A, Condition B, MIL-STD-202B

Salt Atmosphere ..... Per Method 101A, Condition B, MIL-STD-202B

Fungus Resistance ..... Fabricated from non-nutrient materials

CHARACTERISTIC CURVES

Typical Performance Values

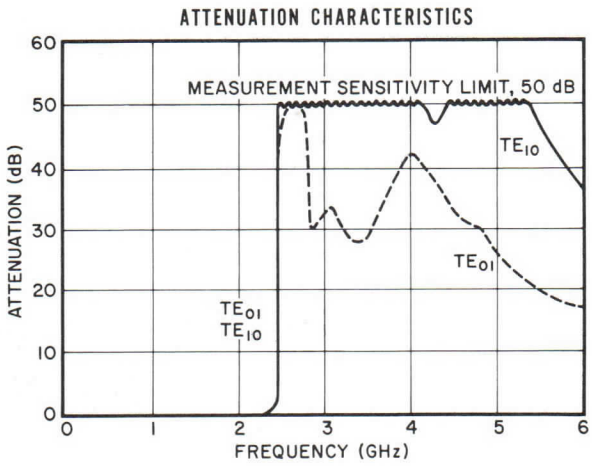

NOTES:

1. Characteristic values are based on performance tests. These figures may change without notice as a result of additional data or product refinement. Varian Associates should be consulted before using this information for equipment design.

2. This filter can be modified to meet other specifications.

3. Value applies with waveguide pressurization of 30 lbf/in^{2}a. Other permissible peak power values can be determined using the following standard conditions: (1) maximum peak power of 4.7 MW and maximum duty of 0.016, (2) atmospheric pressure at an ambient temperature of 20°C, and (3) dry air dielectric.

4. Measured in the TE_{10} mode.

5. Measured in the TE_{10} and TE_{01} modes.

6. Other finishes are available on special order.

7. The F650AA1 is pressure tested to 25 lbf/in^{2}g at the factory.

8. Unless otherwise specified, environmental characteristics are for non-operating and storage conditions.

9. For high altitude operation, the filter must be pressurized as specified in Note 3.

OUTLINE DRAWING

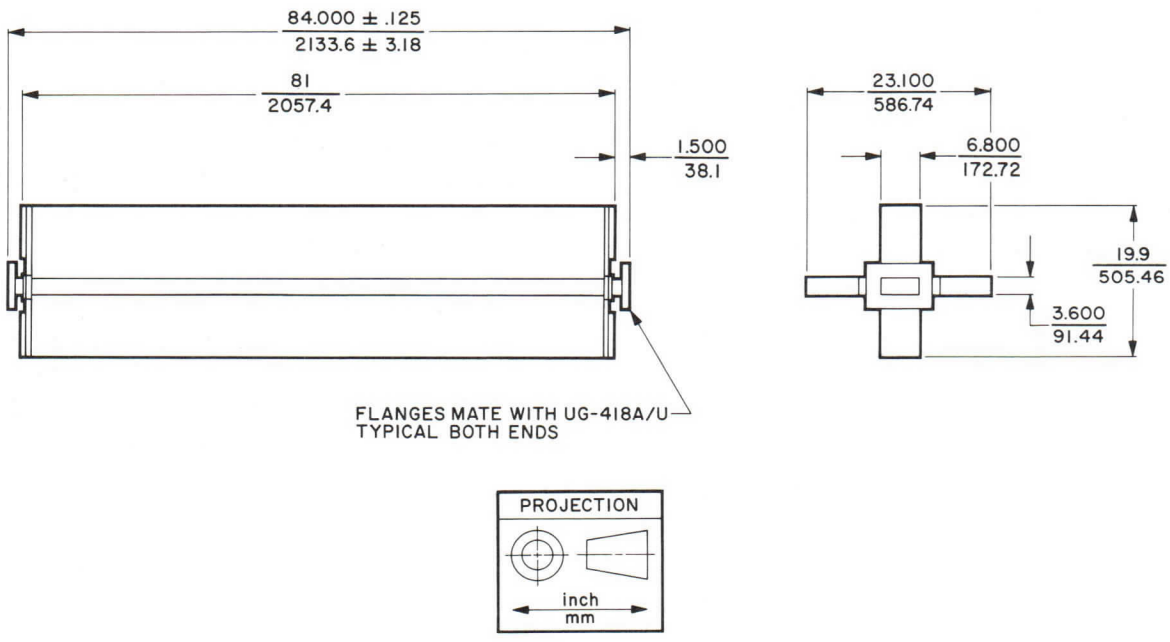

varian

TECHNICAL DATA

F650AA15
HIGH POWER MICROWAVE FILTER
1250-1350 MHz
6.5 MW, peak
6.0 kW, average

DESCRIPTION

The F650AA15 is a straight leaky-wall absorptive harmonic filter for use with high power L-band radar transmitters requiring optimum spurious harmonic-energy suppression. This filter is characterized by very low insertion loss and low VSWR in the passband. It provides trouble-free transmission of high peak and average powers. For best performance, the filter should be installed near the transmitting tube in the waveguide transmission line between the tube and the antenna. The F650AA15 consists of a primary waveguide and arrays of terminated secondary waveguides mounted along the primary waveguide walls. The primary waveguide serves as the high power bandpass element; the secondary waveguide terminations absorbs the harmonic signals. Sturdy, welded, and dip-brazed construction assures long, trouble-free life.

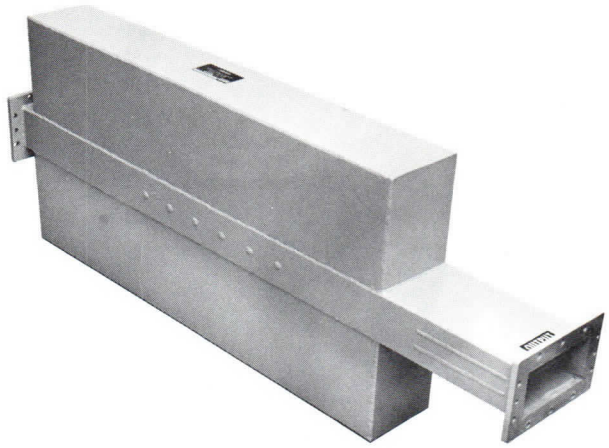

GENERAL CHARACTERISTICS[1]

ELECTRICAL

Passband Frequency Range	1250 to 1350 MHz
Power Handling, peak	6.5 MW
Power Handling, average	6.0 kW
Insertion Loss, max	0.2 dB
Passband VSWR, max	1.15:1
Stopband Attenuation,	
2nd Harmonic	40 dB
3rd Harmonic	30 dB
4th Harmonic	20 dB

PHYSICAL

Dimensions	See Outline Drawing
Weight, approx	60 lb/27.2 kg
Mounting Position	Any
Cooling	Convection and Radiation
RF Flanges	UG-418A/U Flanges
Standard Finish	Grey
Waveguide Pressurization, dry air,	
operating[2]	15 lbf/in^2 g(1.05 kgf/cm^2 g)

OUTLINE DRAWING

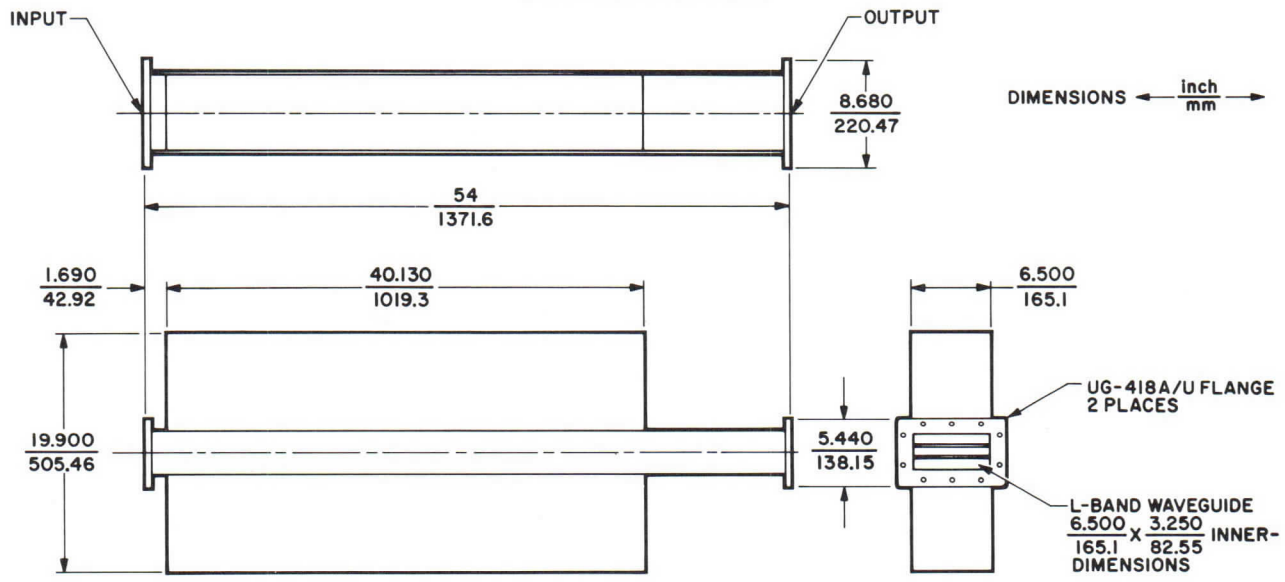

3501 1/76

Printed in U.S.A.

NOTES:

1. Characteristic values are based on performance tests. These figures may change without notice as the result of additional data or product refinement. Contact the Palo Alto Microwave Tube Division before using this information for final equipment design.

2. Waveguide should be pressurized with dry air. This unit is pressure tested to 20 lbf/in^{2}g at the factory.

CHARACTERISTIC CURVE

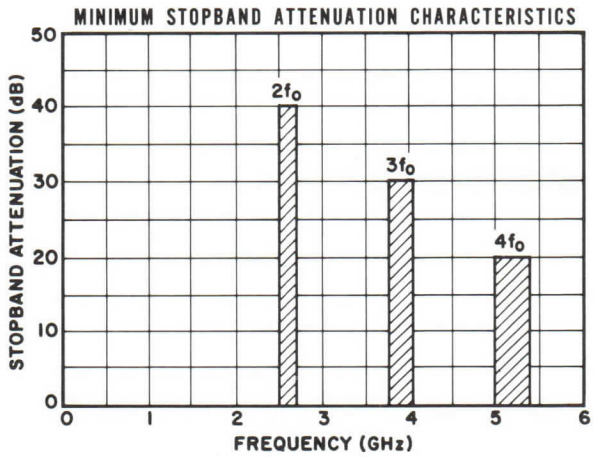

TYPICAL HIGH POWER COMPONENT APPLICATION

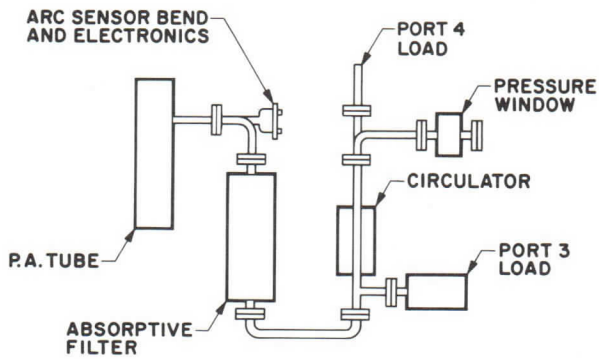

varian

TECHNICAL DATA

F650DA6

HIGH POWER
MICROWAVE FILTER

1250-1350 MHz

DESCRIPTION

The F650DA6 is a high-power, bandpass filter of directly-coupled-cavity design. It is ideal for use in FAA long-range radar systems operting at peak power levels up to 6 megawatts at an average power of 6 kilowatts. This filter effectively suppresses spurious signals on either side of its passband of 1250 to 1350 megahertz. The special directly-coupled-cavity design provides the electrical and mechanical performance required by FAA specifications. Charaterized by very low insertion loss and low VSWR in the passband, the F650DA6 also provides stopband attenuation in excess of 100 dB. Sturdy, welded, aluminum-alloy construction is lightweight and assures long trouble-free life.

GENERAL CHARACTERISTICS[1]

ELECTRICAL

PASSBAND CHARACTERISTICS					STOPBAND ATTENUATION			
					Lower Stopband		Upper Stopband	
Frequency Range (MHz)	Average Power (kW)	Peak Power (MW)	Maximum Insertion Loss (dB)	Maximum VSWR	Frequency (MHz)	Attenuation (dB)	Frequency (MHz)	Attenuation (dB)
1250-1350	6	6	0.30	1.3:1	DC-1180	70	1480-1500	100
					1180-1200	60	1450-1800	60
					1200-1210	50	1430-1450	50
					1210-1230	15	1380-1400	15

PHYSICAL

Dimensions ..... See Outline Drawing
Weight, approx ..... 60 lb/27.2 kg
Operating and Mounting Position ..... Any
Cooling ..... Convection and Radiation
Waveguide WR650
Pressurization, dry air, min ..... 5 lbf/in^2g ($0.35\ kgf/cm^2g$)
RF Flanges .....Mate with UG-418 Flanges
Material ..... Aluminum

OUTLINE DRAWING

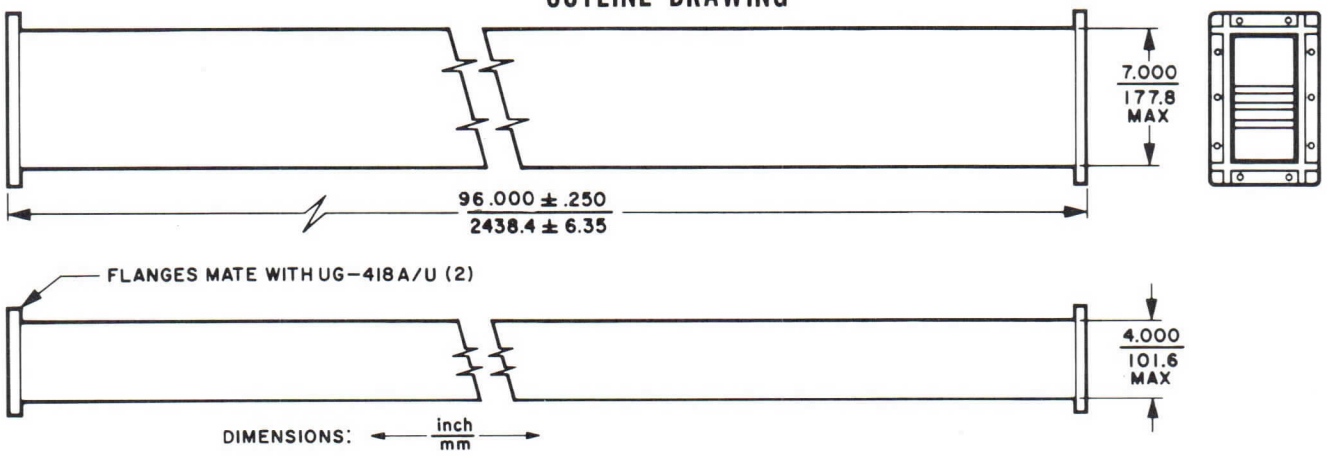

NOTE:
Characteristic values are based on performance tests. These figures may change without notice as the result of additional data or product refinement. Contact Varian Palo Alto Microwave Tube Division, Microwave Components Operation before using this information for equipment design.

3595 1/77

Printed in U.S.A.

varian

HIGH POWER MICROWAVE FILTER

DATA SHEET

F650HA2

DESCRIPTION

The Varian F650HA2 is a combination filter of the absorptive and reactive type. It limits undesirable harmonic signals generated by a microwave transmitter by a combination of absorptive and reactive techniques while introducing a minimum of passband attenuation. This filter, normally located near the transmitting tube in the line between the tube and the antenna, reduces RF interference.

This filter consists of four sections: section I is a reactive bandpass filter, sections II, III, and IV are of the leaky-wall type and comprise a primary waveguide with arrays of terminated secondary waveguides mounted along the walls of the primary waveguide. The terminations located in the secondary waveguides absorb the harmonic signals.

Features are: effective removal of all out-of-band energy, high power, rugged welded and brazed construction, low passband VSWR, minimum insertion loss for maximum filtering, and exceptional long life.

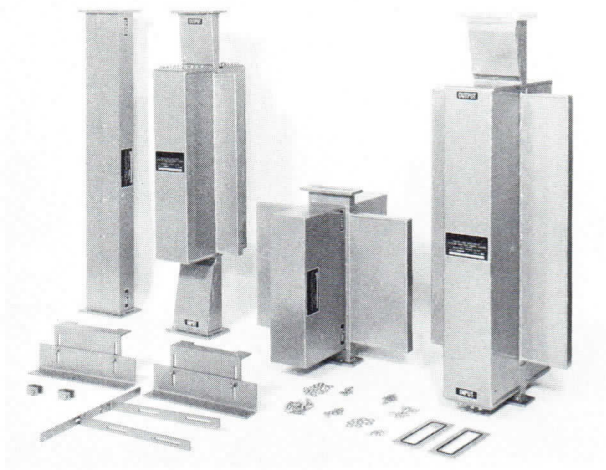

This filter was mechanically and electrically designed for FPS-type radars. The filter can be readily fitted on other radars within the filter frequency range and power rating.

GENERAL CHARACTERISTICS (Note 7)

ELECTRICAL

Circuit	Frequency (GHz)	Attenuation (Note 1) (dB)	VSWR Max	Power (Note 2)
Passband	1.25 – 1.35 fo = 1.3	0.5 max	1.3	3 MW peak 0.0015 duty 4.5 kW average
Stopbands	fo ± 100 MHz	10 min	Note 6	50 kW average
	fo ± 150 MHz	45 min	Note 6	50 kW average
	fo ± 200 MHz	50 min	Note 6	50 kW average
	1.5 – 2.5	40 min	Note 6	50 kW average
	2.5 – 2.7	80 min	Note 6	50 kW average
	2.7 – 3.7	40 min	Note 6	50 kW average
	3.7 – 5.0	70 min	Note 6	50 kW average
	5.0 – 5.4	70 min	Note 6	25 kW average
	5.4 – 6.3	60 min	Note 6	25 kW average

Pub. 1670 2/67

Printed in U.S.A.

F650HA2

PHYSICAL

Operating and Mounting Position	Any
Waveguide Size	WR-650
RF Connectors	
Input	UG-418A/U flange, mates with UG-418A/U
Output	UG-418A/U flange, mates with UG-418A/U
RF Seals Required	
Input	Parker Type 2010-099, or equivalent
Output	Parker Type 2010-099, or equivalent
Dimensions, approximate	
Length	168 in
Height	21.9 in
Width	25.3 in
Weight, approximate	
Net	270 lb
Shipping, domestic, commercial	475 lb
Standard Finishes (Note 3)	
Waveguide Interior	Iridited aluminum
Flange Surfaces	Iridited aluminum
Exterior	Federal Std. 585-Black Enamel No. 17038; MIL-STD-171 Class B
Pressurization, maximum (Note 4)	20 $lbf/in^2 g$
Cooling	Convection and radiation

ENVIRONMENTAL

Temperature	
Operating	-54 to +71°C; MIL-E-4970A par. 4.1 and 4.2
Non-operating and storage	-62 to +71°C; MIL-E-4970A par. 4.1 and 4.2
Altitude	
Operating	0 to 15,000 ft above sea level (Note 5); MIL-E-4970A par. 4.4 Proced. II
Non-operating and storage	0 to 50,000 ft above sea level; MIL-E-4970A par. 4.4 Proced. II
Shock, non-operating and storage	Drop test per MIL-E-4970A par. 4.12.6
Vibration, non-operating and storage	MIL-E-4970A par. 4.6.8
Humidity, non-operating and storage	90 to 95 percent relative humidity and 40 ±2°C temperature for 96 hours; MIL-STD-202B, Method 103A, Condition B
Salt Atmosphere, non-operating and storage	MIL-STD-202B, Method 101A, Condition B
Fungus Resistance	Fabricated from non-nutrient materials

NOTES:

1. Attenuation ratings are measured for the TE_{10} mode in the passband and the TE_{10} and TE_{01} modes in the stopband.
2. The specified power ratings appear in table 1.
3. Standard finishes are supplied unless otherwise specified.
4. This filter is factory tested to 25 $lbf/in^2 g$.
5. For the altitude-operating rating, the filter must be pressurized as specified in table 1.
6. The VSWR of reactive elements is high in the stopbands but is partly padded out by the absorptive elements.
7. This filter can be modified to meet other specifications.

TABLE 1

Power Handling Capability – Peak Rated Values

Conditions Load VSWR	lbf/in^{2}a	Average Peak Power, MW					
		4.5 kW	6.0 kW	10.0 kW	25.0 kW	50.0 kW	100.0 kW
1.0:1	14.7	2.05	1.95	1.85	1.54	1.19	0.72
1.3:1	14.7	1.60	1.52	1.45	1.20	0.93	0.56
1.3:1	20	2.85	2.70	2.58	2.14	1.65	1.00
1.3:1	25	4.00	3.80	3.63	3.00	2.33	1.40
1.3:1	35	7.20	6.80	6.50	5.40	4.20	2.50
1.3:1	10.1	0.80	0.76	0.72	0.60	0.46	0.28

For absolute maximum values multiply the peak ratings by 1.35.

CHARACTERISTIC CURVE

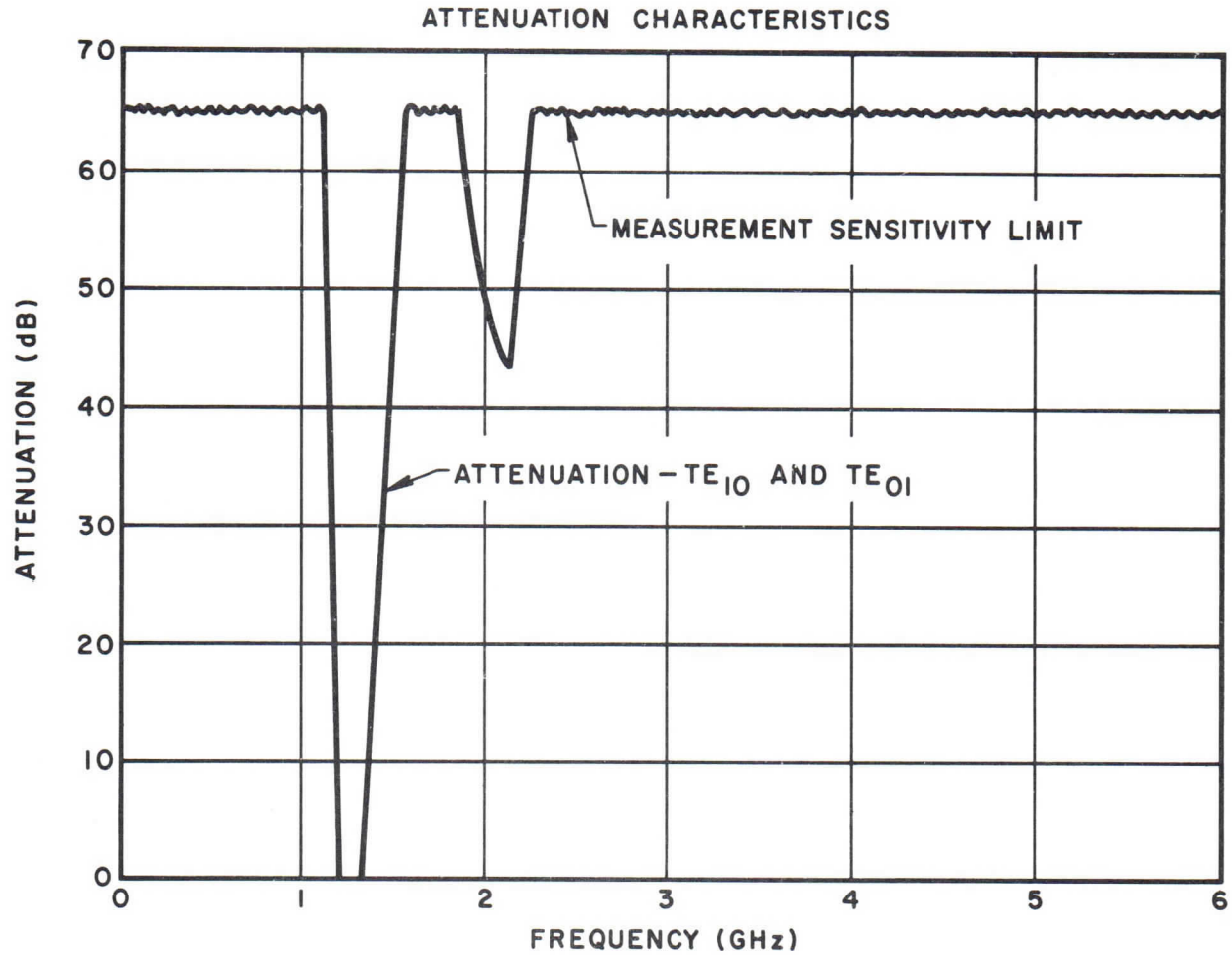

F650HA2

OUTLINE

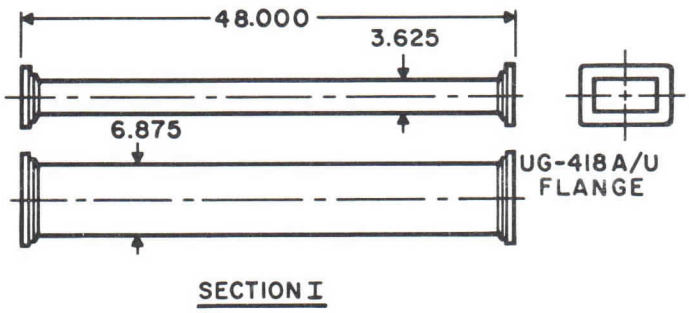

SECTION I

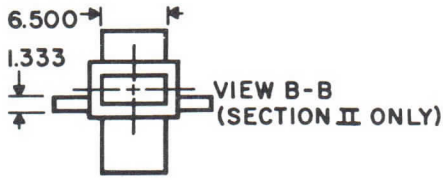

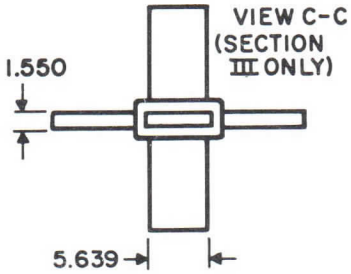

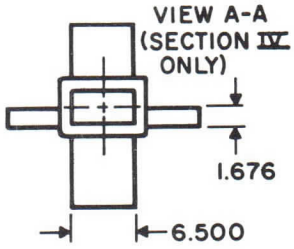

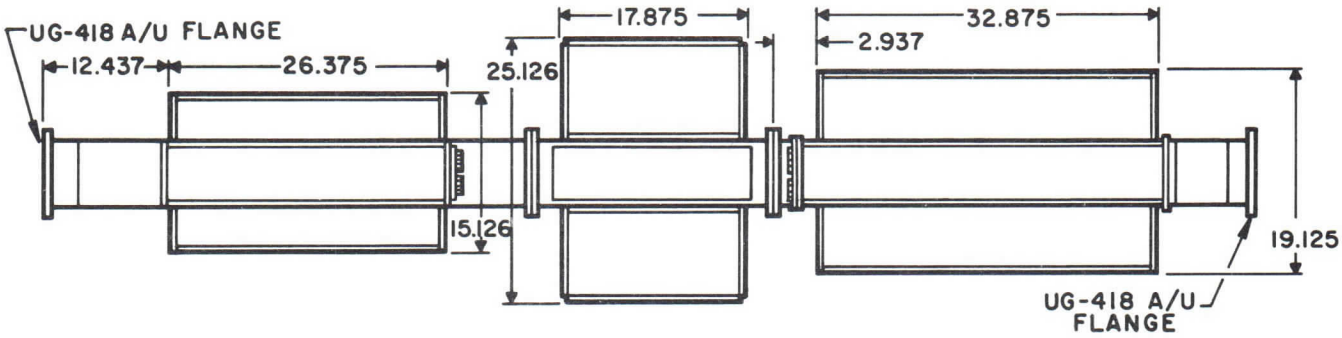

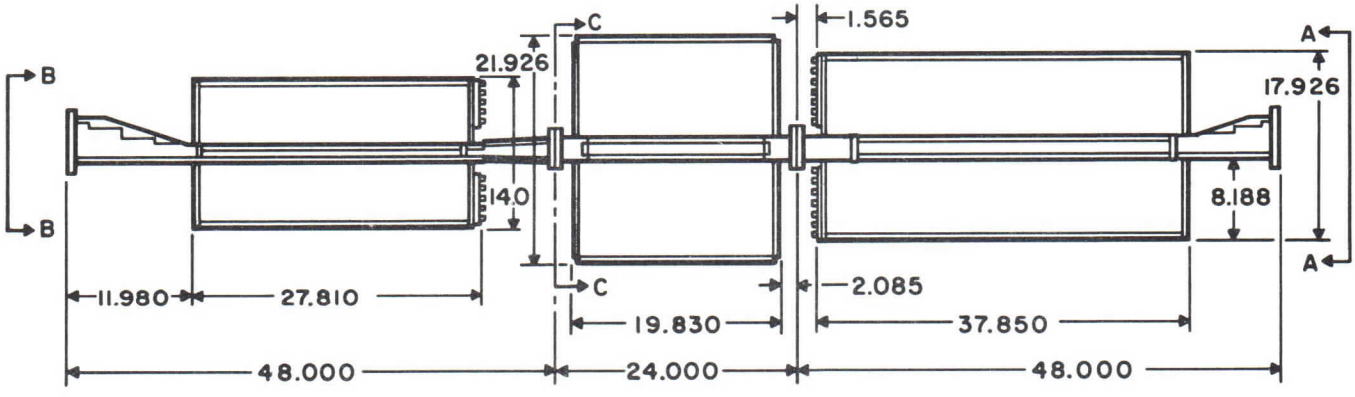

SECTION II SECTION III SECTION IV

DIMENSIONS ARE IN INCHES

varian

HIGH POWER MICROWAVE FILTER

DATA SHEET

F2100AA1
6-66

DESCRIPTION

The F2100AA1 is a two-section harmonic filter of the leaky-wall type. It absorbs undesirable harmonic signals generated by a microwave transmitter while introducing a minimum of passband attenuation. This filter, normally located near the transmitting tube in the line between the tube and the antenna, reduces RF interference and increases the power-handling capability of the waveguide transmission line.

The leaky-wall type absorptive filter comprises a primary waveguide with arrays of terminated secondary waveguides mounted along the walls of the primary waveguide. The harmonic signals are absorbed by the terminations located in the secondary waveguides.

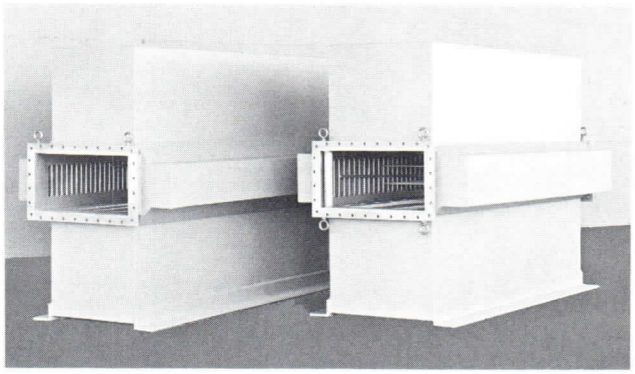

RATINGS

	Frequency (GHz)	Attenuation (dB) Note 1	Max VSWR	Power - Note 2		
				Peak (MW)	Duty	Avg (kW)
Passband	.400 - .450	0.1 max	1.15	10	0.03	300
Stopbands	.800 - .850	20 min	2.0			1
	.850 - .900	25 min	2.6			1
	1.200 - 1.250	30 min	1.4			1
	1.250 - 1.350	35 min	1.4			1
	1.600 - 1.800	25 min	2.9			1

FEATURES

- Absorptive filtering of harmonics
- Leaky-wall principle
- High power
- Low passband loss
- High stopband loss
- Rugged welded aluminum construction
- Increased power handling capability of transmission line.

MECHANICAL

Mounting position	Any
Waveguide size	WR-2100
RF connectors	See outline
Length, in., approx	166
Weight, lb., approx	1200
Pressure capability, psig, max	0
Cooling	Convection and radiation
Finish	Silver gray hammertone

TYPICAL CHARACTERISTICS

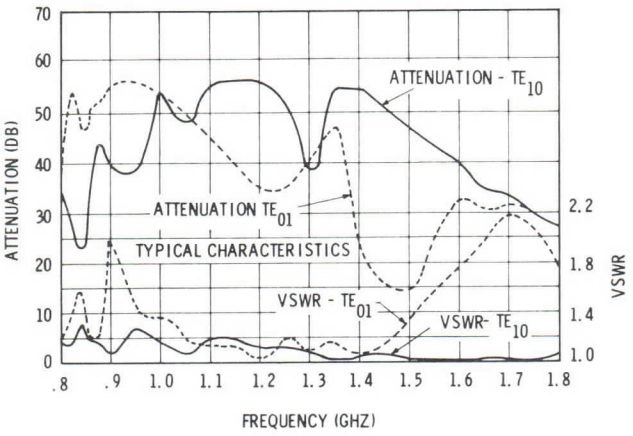

ENVIRONMENTAL

This rugged filter is suitable for use in severe environments. Filters to meet specific environmental requirements are available on request.

NOTES

1. Attenuation ratings are measured for the TE_{10} mode in the passband and the TE_{10} and TE_{01} modes in the stopband.

2. The specified power ratings are for (1) unpressurized waveguide, (2) ambient temperature 20°C, and (3) dry air dielectric.

OUTLINE DRAWING

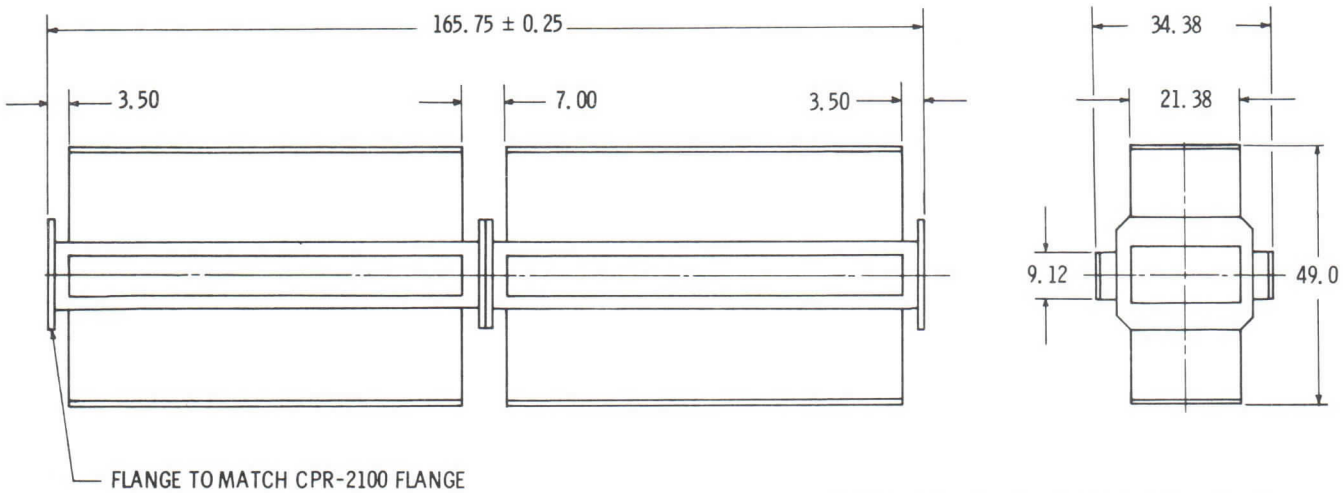

DIMENSIONS ARE IN INCHES; THOSE WITHOUT TOLERANCES ARE APPROXIMATE.

Printed in U.S.A.

HIGH POWER WATERLOADS

varian

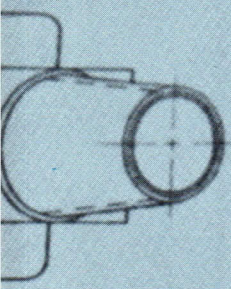

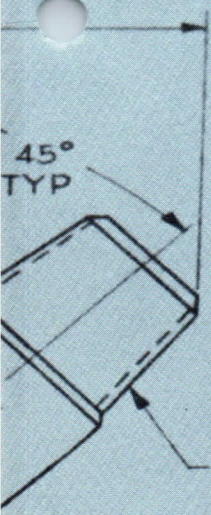

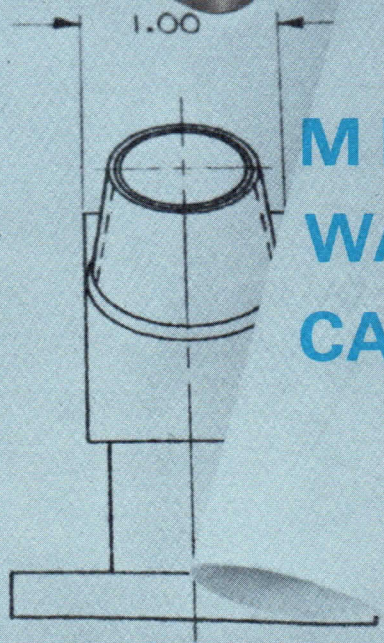

MICROWAVE WATERLOADS & CALORIMETERS

CATALOG NO. 3

WITH CPR112F FLANGE

INTRODUCTION

This catalog lists all the water loads available from the Varian Microwave Components Operation. Both rack mount and table mount calorimeters are also listed.

The Microwave Components Operation is an integral part of the Varian Palo Alto Tube Division. Our working arrangement with the tube groups assures the buyer a quality product that has proven itself under high power conditions.

Sufficient detailed information is given so that engineers can determine the appropriate water load for a particular application. The Microwave Components Operation can design and fabricate loads to particular specifications and we welcome requests for special and unusual requirements.

varian palo alto tube division
611 hansen way · palo alto, california 94303

CONTENTS

	Page
■ Introduction	2
■ Types of Water Loads	3
■ High Power Miniature Water Loads (Ceramic Block Type)	4
■ High Power Very Broadband Water Loads (Glass Tube Type)	8
■ High Power Broadband Compact Water Loads (Teflon Wedge)	10
■ High Power Broadband Coaxial Water Loads	12
■ Calorimeters	12
■ Thermometer Wells	14
■ Explanation of Water Load Model Numbers	14
■ Calorimetric Measurement Information	15
■ Sales Offices	16

TYPES OF WATER LOADS

Varian manufactures four different types of water loads. These loads have low VSWR and are conservatively rated. Most types are capable of maintaining gas pressure, many can be used in evacuated waveguides, and all are designed for convenient installation and reliable operation.

Selection of water load for a particular application is normally based on many system considerations. With three waveguide types available, Varian is able to make trade-offs in features, so that most applications can be accommodated by a standard load. Of course, we always are glad to design special loads to meet any of your unique requirements.

The basic designs of these standard water loads produce a maximum VSWR of 1.15:1 over the following bandwidths:

Teflon Wedge	30-40%
Ceramic Block	12-16%
Glass Tube	50-75% (Full bandwidth with appropriate waveguide transitions)

Lower values of VSWR can be provided for narrowband units.

To assist in selecting the best load for your applications, the features of each type are discussed below.

CERAMIC BLOCK LOADS

These loads utilize a ceramic block window as a dielectric step transformer to match the impedance of the waveguide to that of the water. The water acts as both the attenuator for the rf power and a means for removing the heat.

Features

- **Very High Average Power Capability**
- **Very Small Size**
- **Light Weight**
- **Extremely Rugged Construction**

These loads are miniature in size and they have very high power capability. However, the bandwidths are limited by 12 to 16 percent and the inlet coolant temperature range is 10 to 60°C.

TEFLON WEDGE LOADS

These loads are similar in basic principle to the ceramic block type. The primary difference is a linear taper of teflon employed as a broadband matching device which allows the use of ethylene/glycol and/or water.

Features

- **High Power Capability**
- **Extremely Rugged Construction**
- **Broad Bandwidth**
- **Water or Glycol-Water Mixture Interchangeability**

This family of loads has a lower average power and greater weight than the ceramic block or glass tube loads, but the bandwidths of teflon wedge loads are much greater than those of the ceramic block loads. Both teflon and ceramic loads are extremely rugged.

COAXIAL LOADS

These loads are of the tapered-resistor type. The absorptive element, which is formed by a coneshaped teflon sleeve, is an aquaeous solution of either ethylene/glycol or water. The teflon acts as a broadband transition for the rf power.

Features

- **High Average Power Capability**
- **Broad Bandwidth**
- **Calorimetric Operation**

Coaxial loads are ruggedly constructed broadband devices that can be built to handle high average power. This type of load is well suited to UHF applications.

GLASS TUBE LOADS

Features

- **High Average Power Capability**
- **Very Broadband Operation**
- **Light Weight**
- **Calorimetric Operation**

Three additional factors must be considered in the choice of glass tube loads. They are (1) not as rugged as teflon and ceramic loads, (2) larger, and (3) limited in pressure and temperature capabilities. They are ideal for laboratory applications.

high power miniature water loads

(ceramic block type)

MODEL[1] NUMBER	FREQUENCY RANGE (GHz)	AVG. POWER (kW)	PRESSURIZED PEAK POWER – MW DRY AIR 0 (lbf/in²g)	30 (lbf/in²g)	VACUUM	MAX VSWR	COOLANT CHARACTERISTICS TYPE	INPUT TEMP RANGE (°C)	STATIC PRESS. TEST (lbf/in²g)	FLOW[2] RATE (gpm)	MAX PRESS. DROP (lbf/in²)
L975FA1	0.79 – 0.82	150	1.25	----	----	1.07	Water	20 – 30	100	30	2
L770BA1	1.25 – 1.35	100	5.0	35.0	----	1.15	Water	20 – 40	100	19	5
L650BA1	1.30 – 1.40	200	5.0	----	----	1.10	Water	10 – 40	200	40	2
L430BH4	2.10 – 2.13	550	----	----	----	1.10	Water	10 – 65	200	90	40
L430BH2	2.30 – 2.41	500	5.0	----	----	1.15	Water	10 – 62	160	95	45
L430BH1	2.30 – 2.48	500	5.0	----	----	1.15	Water	20 – 45	100	95	----
L430BB1	2.35 – 2.70	60	5.0	----	----	1.15	Water	65 – 80	100	11.4	5
L284BB8	2.65 – 3.00	20	2.0	10.0	----	1.20	Water	40 – 60	150	3.8	2
L284BB14	2.65 – 3.00	20	2.0	14.0	25.0	1.20	Water	40 – 60	150	3.8	2
L284BA1	2.70 – 3.00	200	2.0	14.0	----	1.15	Water	20 – 60	150	38	2
L284BC6	2.80 – 2.90	15	----	15.0	25.0	1.20	Water	20 – 60	150	3	2
L284BA5	2.80 – 3.10	10	----	----	30.0	1.15	Water	20 – 60	150	1.9	2
L284BB6	2.80 – 3.10	50	2.0	14.0	----	1.15	Water	20 – 60	150	9.5	2
L284BB7	2.80 – 3.10	30	----	----	10.0	1.15	Water	20 – 60	150	5.7	2
L284BB10	2.80 – 3.10	2	2.0	----	----	1.15	Water	20 – 60	150	0.5	2
L294BB11	2.80 – 3.10	50	2.0	14.0	----	1.15	Water	20 – 60	150	9.5	2
L284BB12	2.80 – 3.10	50	2.0	----	----	1.15	Water	20 – 60	150	9.5	2
L294BB18	2.80 – 3.10	2	2.0	----	----	1.15	Water	20 – 60	150	0.5	2
L284BC3	2.80 – 3.10	100	----	----	6.0	1.15	Water	20 – 60	150	19	2
L284BC4	2.80 – 3.10	50	2.0	14.0	25.0	1.15	Water	20 – 60	150	9.5	2
L284BC5*	2.80 – 3.10	18	2.0	14.0	15.0	1.15	Water	20 – 60	150	3.5	2
L284BC7	2.80 – 3.10	50	2.0	14.0	25.0	1.15	Water	20 – 60	150	9.5	2
L284BC8	2.80 – 3.10	50	2.0	14.0	25.0	1.15	Water	20 – 60	150	9.5	2
L284BA2	2.85 – 3.20	200	2.0	14.0	----	1.15	Water	20 – 60	150	38	2
L284BB13	2.856	1	2.0	----	----	1.05	Water	45°C max	125	0.2	2
L284BC9	2.90 – 3.26	30	2.0	14.0	----	1.15	Water	5 – 40	150	10	5
L284BD1	2.90 – 3.26	6	----	----	----	1.15	Water	5 – 40	150	2	2
L284BB15	3.00 – 3.60	50	2.0	14.0	----	1.25	60% EG 40% Water	80	150	9.5	2
L284BA3	3.10 – 3.50	200	2.0	14.0	----	1.15	Water	20 – 60	150	38	2
L284BC10	3.40 – 3.60	50	2.0	14.0	----	1.15	15% EG 85% Water	35 – 55	150	9.5	2
L187BA2	4.40 – 5.00	100	----	----	----	1.15	Water	20 – 60	150	19	2
L187BB6	4.40 – 5.00	25	----	----	----	1.15	Water	20 – 50	150	4.8	2
L187BB8	5.20 – 5.90	20	0.9	6.0	----	1.20	Water	25 – 35	150	3.8	2
L187BB9	5.20 – 5.90	20	0.9	6.0	----	1.20	50% EG 50% Water	25 – 60	150	3.8	2
L187BB10	5.25 – 5.75	25	0.9	6.0	----	1.15	Water	10 – 20	150	4.8	2
L187BB5	5.40 – 5.90	25	0.9	6.0	----	1.15	Water	25 – 50	150	4.8	2
L187BB7	5.40 – 5.90	11	0.9	6.0	----	1.15	Water	25 – 50	100	2.1	2
L137BB7	5.50 – 6.50	20	0.5	3.5	----	1.15	60% EG 40% Water	25 – 70	150	3.8	2
L159BA1	5.90 – 6.50	20	----	----	----	1.15	Water	20 – 60	150	17	4
L137BB5	5.90 – 6.50	12	0.5	----	----	1.10	15% EG 85% Water ±5%	55 – 65	125	2.3	4
L137BB9	5.90 – 6.50	20	----	----	----	1.10	Water	20 – 30	125	3.8	4
L137BA1	5.90 – 6.80	85	----	----	----	1.15	Water	20 – 60	150	16.2	10
L137BB6	5.925 – 6.425	20	----	----	----	1.15	50% EG 50% Water	60	100	3.8	4

* *Power sampling loop of 50 dB provided on this load.*

1. *First numbers of Model Number designate waveguide size (see page 14 for explanation).*
2. *Minimum full power.*
3. *Flanges are made to the latest revisions of EIA standard RS-271 and/or MIL-F-3922.*

CONNECTORS		APPROX. DIMENSIONS				
RF[3]	COOLANT	LENGTH (in.)	WIDTH OR DIAM. (in.)	DEPTH (in.)	APPROX. WEIGHT (lb)	MAT'L (EXCLUSIVE OF FLANGE)
CPR-975F	1¼" NPT Male	72.00	12.00	----	----	Aluminum
CPR-770F	2½", 150 #	30.00	10.00	----	30.00	Aluminum
CPR-650F	2"–11½" NPT Male	29.50	10.70	5.50	----	CU – SST
Special	2"–11½" NPT Male	19.75	8.50	3.00	----	CU – SST
CPR-430F	2" NPT Female	15.40	12.00	2.60	16.50	CU – SST
UG-435	2" NPT Male	16.00	8.10	2.60	14.00	CU – SST
CPR-430F	1" NPT Female	15.40	4.70	2.60	13.50	CU – SST
CPR-284F	1" NPT Female	10.75	3.30	1.80	6.50	CU – SST
Special Vacuum	1" NPT Female	10.75	3.30	1.80	6.50	CU – SST
CPR-284F	1" NPT Female	10.75	3.30	1.80	6.50	CU – SST
Special Vacuum	1" NPT Female	11.00	3.30	1.80	8.00	CU – SST
Special Vacuum	1" NPT Female	10.75	3.30	1.80	6.50	CU – SST
Special Groove	1" NPT Female	10.75	3.30	1.80	6.50	CU – SST
Special Vacuum	1" NPT Female	10.75	3.30	1.80	6.50	CU – SST
CPR-284G	1" NPT Female	10.75	3.30	1.80	6.50	CU – SST
CPR-284F	1" NPT Female	10.75	3.30	1.80	6.50	CU – SST
Special	1" NPT Female	10.75	3.30	1.80	6.50	CU – SST
UG-53/U	1" NPT Female	10.75	3.30	1.80	6.50	CU – SST
Special Vacuum	1" NPT Female	10.75	3.30	1.80	6.50	CU – SST
Special Vacuum	1" NPT Female	11.00	3.30	1.80	7.00	CU – SST
Special Vacuum	1" NPT Female	10.75	3.30	1.80	6.50	CU – SST
CPR-284F	1" NPT Female	11.00	3.30	1.80	8.00	CU – SST
Special Vacuum	1" NPT Female	11.00	3.30	1.80	7.00	CU – SST
CPR-284F	1" NPT Female	10.75	3.30	1.80	6.50	CU – SST
Special Vacuum	1" NPT Female	10.75	3.30	1.80	7.00	CU – SST
CPR-284F	1-1/16–12 UN-3B	11.00	3.30	1.80	8.00	CU – SST
CPR-284F	1" NPT Female	10.75	3.30	1.80	6.50	CU – SST
Special Vacuum	1" NPT Female	10.75	3.30	1.80	6.50	CU Alloy SST
CPR-284F	1" NPT Female	10.75	3.30	1.80	6.50	CU – SST
UG-54B/U	1" NPT Female	10.75	3.30	1.80	8.00	CU – SST
CPR-187F	½" NPT Female	6.75	2.12	1.12	2.20	CU – SST
UG-149	½" NPT Female	6.75	2.12	1.12	2.20	CU – SST
CPR-187F	½" NPT Female	6.75	2.12	1.12	2.20	CU – SST
CPR-187F	½" NPT Female	6.75	2.12	1.12	2.20	CU – SST
CPR-187F	½" NPT Female	6.75	2.12	1.12	2.20	CU – SST
UG-149	½" NPT Female	6.75	2.12	1.12	2.20	CU – SST
UG-149 Stainless	½" NPT Female	6.75	2.12	1.12	2.20	CU – SST
CPR-137F	½" NPT Female	6.00	2.12	1.12	2.30	CU – SST
CPR-159F	½" NPT Female	5.75	1.90	1.00	2.00	CU – SST
CPR-137G	½" Tube 37° Flare Male	4.19	2.72	2.75	2.10	CU Alloy
UG-344	3/8" NPT Male	4.19	1.75	2.20	2.10	CU Alloy
CPR-137F	½" NPT Female	7.75	2.12	1.12	2.30	CU Alloy
CPR-137G	7/16–20 UNF-3A Male	4.19	1.75	2.20	2.10	CU Alloy

UHF

L

S-BAND

C-BAND

(Cont.)

high power miniature water loads (ceramic block type) (cont.)

MODEL[1] NUMBER	FREQUENCY RANGE (GHz)	AVG. POWER (kW)	PRESSURIZED PEAK POWER – MW DRY AIR 0 (lbf/in²g)	30 (lbf/in²g)	VACUUM	MAX VSWR	COOLANT CHARACTERISTICS TYPE	INPUT TEMP RANGE (°C)	STATIC PRESS. TEST (lbf/in²g)	FLOW[2] RATE (gpm)	MAX PRESS. DROP (lbf/in²)
L137BA7	7.10 – 7.20	150	----	----	----	1.10	Water	10 – 62	200	35	30
L112BA2	7.50 – 8.50	75	0.3	2.0	----	1.15	Water	30 – 60	150	14.3	10
L112BC2	7.50 – 8.50	15	0.3	2.0	----	1.15	Water	30 – 60	150	2.9	2
L137BA5	7.70 – 7.90	70	0.5	----	----	1.10	Water	38	170	13.3	10
L112BB7	7.80 – 8.50	15	0.3	2.0	----	1.15	Water	20 – 60	150	2.9	2
L112BA5	7.90 – 8.40	75	----	----	----	1.20	60% EG 40% Water	60 – 80	150	14.3	10
L112BB5	7.90 – 8.40	15	----	----	----	1.10	15% EG 85% Water ±5%	55 – 65	150	2.9	2
L112BB6	7.90 – 8.40	15	----	----	----	1.20	60% EG 40% Water	60 – 80	150	2.9	2
L112BC1	7.90 – 8.40	10	----	----	----	1.20	60% EG 40% Water	60 – 80	125	1.9	2
L112BC3	7.90 – 8.40	10	----	----	----	1.20	Water or 50% EG, 50% Water	65 – 70	125	3	10
L112BC4	7.90 – 8.40	10	----	----	----	1.15	60% EG 40% Water	45 – 71	125	3	5
L112FA1	7.90 – 8.40	15	----	----	----	1.10	Coolanol 25	60 – 80	150	5	10
L137BB8	7.90 – 8.40	10	----	----	----	1.15	65% EG 35% Water	66	125	1.9	2
L137BC2	7.90 – 8.40	20	----	----	----	1.15	60% EG 40% Water	49 – 60	125	3.8	2
L112BF1	8.35 – 8.55	120	0.3	----	----	1.07	Water	15 – 40	150	23	25
L90BA2	9.00 – 10.00	50	0.17	1.1	----	1.15	Water	20 – 60	150	9.5	10
L112BB8	9.40	15	----	----	----	1.15	Water	20 – 60	150	2.9	2
L90BB5	9.40 – 10.60	10	0.17	1.1	----	1.15	Water	20 – 60	150	1.9	2
L90BA3	9.80 – 10.80	50	0.17	1.1	----	1.15	Water	20 – 60	150	9.5	10
L90FA1	9.80 – 10.80	12	----	----	----	1.25	Water	10 – 50	125	2.5	2
L90BB8	10.00 – 10.40	10	----	----	----	1.15	50% EG 50% Water	20 – 60	150	1.9	2
L62BB3	15.00 – 16.60	5	0.12	0.8	----	1.20	Water	20 – 60	150	2	2
L62BB2	15.40 – 16.80	5	0.12	0.8	----	1.15	Water	20 – 60	150	2	2
L62BD1	15.80 – 16.20	20	0.12	0.8	----	1.07	Water	25 – 35	150	8	5
L62BB1	17.70 – 18.20	5	0.12	0.8	----	1.15	Water	20 – 60	100	2	2
L62BA1	17.975 – 18.025	20	0.12	0.8	----	1.15	Water	5 – 35	150	4	4
L28BA2	26.50 – 28.00	2	0.02	0.13	----	1.15	Water	25 – 55	100	1	2
L28BA1	33.80 – 35.00	2	0.02	0.13	----	1.15	Water	25 – 55	100	1	2

1. *First numbers of Model Number designate waveguide size (see page 14 for explanation).*
2. *Minimum full power.*
3. *Flanges are made to the latest revisions of EIA standard RS-271 and/or MIL-F-3922.*

CONNECTORS		APPROX. DIMENSIONS				
RF[3]	COOLANT	LENGTH (in.)	WIDTH OR DIAM. (in.)	DEPTH (in.)	APPROX. WEIGHT (lb)	MAT'L (EXCLUSIVE OF FLANGE)
CPR-137F	½" NPT Male	3.85	2.50	2.60	1.50	CU Alloy
CPR-112F	½" NPT Male	2.75	3.88	1.00	1.10	CU Alloy
CPR-112F	½" NPT Female	2.62	3.25	1.00	1.10	CU Alloy
CPR-137F	½" NPT Male	3.50	3.75	1.00	1.20	CU – SST
CPR-112F	½" NPT Male	2.75	3.88	1.00	1.10	CU Alloy
CPR-112F	½" NPT Male	2.75	3.88	1.00	1.10	CU Alloy
CPR-112F	½" NPT Male	2.75	3.88	1.00	1.10	CU Alloy
CPR-112F	½" NPT Male	2.75	3.88	1.00	1.10	CU Alloy
CPR-112F	¼" & ½" NPT Female	2.75	3.12	1.00	1.10	CU Alloy
CPR-112F	½"–14 NPT Male	2.85	3.88	1.00	1.20	CU Alloy
CPR-112G	½" NPT Male	5.00	1.75	1.00	1.30	CU Alloy
CPR-112F	½" NPT Female	8.00	3.00	2.20	3.00	CU Alloy
CPR-137G	½" NPT Female	2.87	3.50	1.00	1.20	CU Alloy
UG-343 Modified	½" NPT Male	3.50	3.75	1.00	1.50	CU Alloy
CPR-112F	½" NPT Male	3.00	3.45	1.00	1.30	CU – SST
CPR-90F	½" NPT Male	2.75	3.87	1.00	1.00	CU Alloy
CPR-112F	½" NPT Male	2.75	3.88	1.00	1.10	CU Alloy
UG-39	½" NPT Male	2.75	3.87	1.00	1.00	CU Alloy
CPR-90F	½" NPT Male	2.75	3.87	1.00	1.00	CU Alloy
UG-39/U	½" NPT Male	1.75	1.63	2.50	1.00	CU – SST
UG-39	½" NPT Male	2.75	3.87	1.00	1.00	CU Alloy
UG-419	3/8" NPT Male	2.29	2.72	0.75	0.70	CU Alloy
UG-419	3/8" NPT Male	2.29	2.72	0.75	0.70	CU Alloy
Special Stainless	3/8" NPT Male	2.29	2.72	0.75	0.70	CU Alloy
Special	3/8" NPT Male	2.29	2.72	0.75	0.70	CU Alloy
UG-419	3/8" NPT Male	2.29	2.72	0.75	0.70	CU Alloy
UG-599	3/8" NPT Male	2.86	2.72	0.75	0.50	CU Alloy
UG-599	3/8" NPT Male	2.86	2.72	0.75	0.50	CU Alloy

X-BAND

Ku

Ka

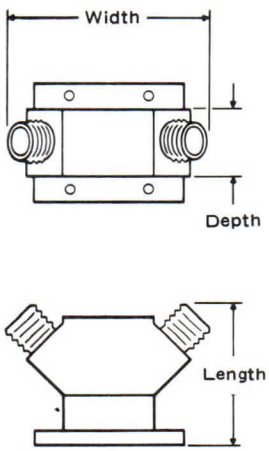

Model No. L137BA5

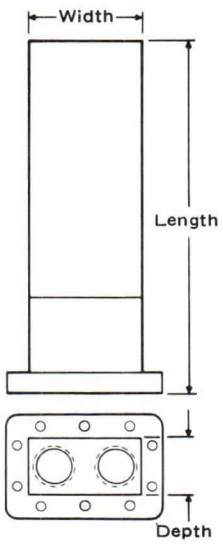

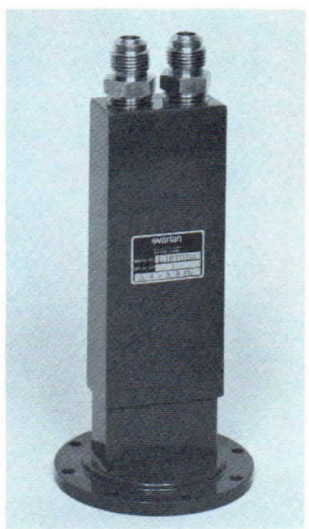

Model No. L187BB5

high power very broadband water loads

(glass tube type)

MODEL[1] NUMBER	FREQUENCY RANGE (GHz)	AVG. POWER (kW)	PRESSURIZED PEAK POWER – MW DRY AIR		MAX VSWR	COOLANT CHARACTERISTICS[2]				
			0 (lbf/in²g)	15 (lbf/in²g)		MAX OUTLET TEMP. (°C)	APPROX. PRESS. DROP (lbf/in²)	STATIC PRESS. TEST (lbf/in²g)	FLOW[3] RATE (gpm)	APPROX. TEMP. RISE (°C)
L284DA2	2.80 – 4.80	40	3.0	9.6	1.15	75	5	75	3	50
L284DA3	2.80 – 4.80	40	3.0	9.6	1.15	75	Note 4	75	3	50
L187DA1	3.90 – 5.90	40	2.0	6.4	1.15	75	5	75	3	50
L187DA2	3.90 – 5.90	40	2.0	6.4	1.15	75	Note 4	75	3	50
L187DA3	4.00 – 6.00	12	2.0	6.4	1.15	75	12	75	2.3	20
L187DA4	4.80 – 7.50	12	2.0	6.4	1.15	75	12	75	2.3	20
L137DA1	5.80 – 8.20	40	0.7	2.2	1.10	75	5	75	3	50
L137DA2	5.80 – 8.20	12	0.7	2.2	1.15	75	12	75	2.3	20
L137DA3	5.80 – 8.20	40	0.7	2.2	1.15	75	Note 4	75	3	50
L112DA2	7.00 – 10.20	40	0.5	1.6	1.10	75	5	75	3	50
L112DA3	7.00 – 10.20	40	0.5	1.6	1.10	75	Note 4	75	3	50
L112DA1	7.10 – 10.20	8	0.5	1.6	1.15	75	12	75	1.5	20
L90DA1	7.10 – 12.40	8	0.3	1.0	1.15	75	12	75	1.5	20
L90DA2	8.20 – 12.40	40	0.3	1.0	1.10	75	5	75	3	50
L90DA3	8.20 – 12.40	40	0.3	1.0	1.10	75	Note 4	75	3	50

1. *First numbers of Model Number designate waveguide size (see page 14 for explanation).*
2. *Coolant can be Ethylene Glycol or Water.*
3. *Minimum full power.*
4. *See individual data sheets.*
5. *Flanges are made to the latest revisions of EIA standard RS-271 and/or MIL-F-3922.*

CONNECTORS		APPROX. DIMENSIONS				
RF[5]	COOLANT	LENGTH (ft – in)	WIDTH (in.)	APPROX. WEIGHT (lb)	MOUNTING POSITION	NOTES
UG-53	½" NPT Female	3 – 3	7½	16	Any	Load only
UG-53	½" NPT Female	3 – 3	8	45	Horiz – Press Reg. Upright	L284DA2, Flow Reg., Thermometers
UG-149	½" NPT Female	3 – 11	7½	25	Any	L284DA2, Cooled Trans.
UG-149	½" NPT Female	3 – 11	8	28	Horiz – Press Reg. Upright	L284DA2, Flow Reg., Therm, Cooled Trans.
UG-149	3/8" OD Tube Female	2 – 2	4-1/8	5	Any	Load only
UG-149	3/8" OD Tube Female	2 – 2	4-1/8	5	Any	Load only
UG-344	½" NPT Female	4 – 2	7½	20	Any	L284DA2, Cooled Trans.
UG-344	3/8" OD Tube Female	2 – 8½	4-1/8	8	Any	L187DA3, Transition
UG-344	½" NPT Female	4 – 2	8	34	Horiz – Press Reg. Upright	L284DA2, Flow Reg., Therm, Cooled Trans.
UG-51	½" NPT Female	4 – 1	7½	20	Any	L284DA2, Cooled Trans.
UG-51	½" NPT Female	4 – 1	8	34	Horiz – Press Reg. Upright	L284DA2, Flow Reg., Therm., Cooled Trans.
UG-51	3/8" OD Tube Female	1 – 5	3	2	Any	Load only
UG-39	3/8" OD Tube Female	1 – 9¼	3-1/8	3	Any	L112DA1, Trans.
UG-39	½" NPT Female	4 – 1	7½	20	Any	L284DA2, Cooled Trans.
UG-39	½" NPT Female	4 – 1	8	24	Horiz – Press Reg. Upright	L284DA2, Flow Reg., Therm., Cooled Trans.

S-BAND

C-BAND

X-BAND

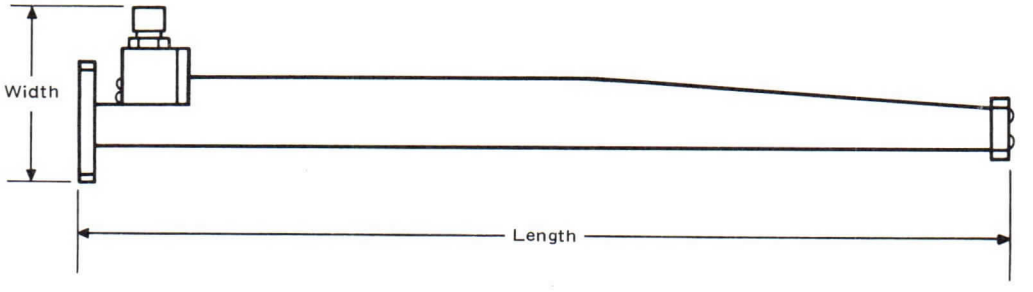

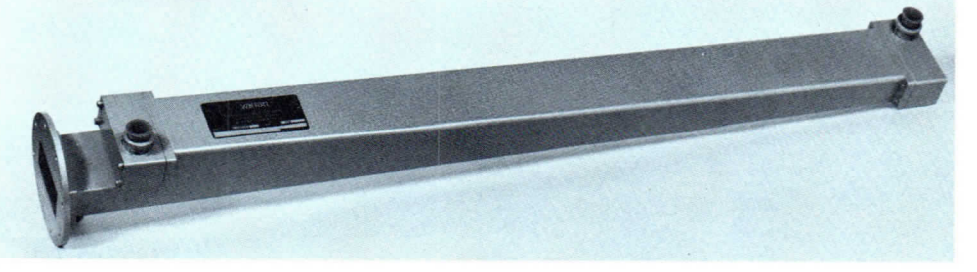

Model N. L284DA2

high power broadband compact water loads

(teflon wedge)

MODEL[1] NUMBER	FREQUENCY RANGE (GHz)	AVG. POWER (kW)	PRESSURIZED PEAK POWER – MW DRY AIR 0 (lbf/in²g)	PRESSURIZED PEAK POWER – MW DRY AIR 30 (lbf/in²g)	MAX VSWR	COOLANT CHARACTERISTICS[2] STATIC PRESS. TEST (lbf/in²g)	COOLANT CHARACTERISTICS[2] FLOW[3] RATE (gpm)	COOLANT CHARACTERISTICS[2] MAX PRESS. DROP (lbf/in²)
L770AA2	0.95 – 1.50	75	7.0	50.0	1.15	125	15	5
L650AA3	1.12 – 1.70	50	5.0	35.0	1.15	125	8	5
L650AA5	1.12 – 1.70	50	5.0	35.0	1.15	125	8	5
L650AA1	1.20 – 1.60	50	5.0	35.0	1.20	150	8	5
L770AA1	1.24 – 1.34	75	7.0	50.0	1.10	125	15	5
L650AA2	1.25 – 1.35	50	5.0	35.0	1.10	125	8	5
L650AA6	1.34 – 1.46	50	5.0	35.0	1.20	125	8	5
L430AA5	1.70 – 2.40	35	3.0	20.0	1.15	125	7	5
L430AA6*	1.70 – 2.60	10	3.0	20.0	1.15	125	5	5
L430AA1	1.70 – 2.60	35	3.0	20.0	1.15	125	7	5
L430AA3	1.75 – 2.12	35	3.0	20.0	1.10	125	7	5
L430AA4	1.75 – 2.12	35	3.0	20.0	1.10	125	7	5
L430AA2	2.20 – 2.40	35	3.0	20.0	1.10	125	7	5
L284AA1	2.60 – 3.35	25	2.0	14.0	1.10	125	5	5
L284AA3	2.60 – 3.35	25	2.0	14.0	1.10	125	5	5
L284AA4	2.60 – 3.35	25	2.0	14.0	1.10	125	5	5
L284AA5	2.60 – 3.70	25	2.0	14.0	1.15	125	5	5
L284AA2	2.60 – 4.00	25	2.0	14.0	1.15	125	5	5
L284AA6	2.60 – 4.00	25	2.0	14.0	1.15	125	5	5
L284AA7	2.60 – 4.00	25	2.0	14.0	1.15	125	5	5
L187AA1	3.95 – 5.85	15	0.9	6.0	1.15	125	3	5
L187AA5	3.95 – 5.85	15	0.9	6.0	1.15	125	3	5
L187AA3	4.00 – 6.00	15	0.9	6.00	1.15	125	3	5
L187AA2	4.40 – 5.00	15	----	----	1.10	125	3	5
L187AA4	4.40 – 5.00	15	----	----	1.10	125	3	5
L187AA6	4.40 – 5.00	15	----	----	1.10	125	3	5
L137AA2	5.70 – 6.50	10	0.5	3.5	1.10	125	4	5
L137AA6	5.725 – 8.425	10	0.5	3.5	1.15	125	4	5
L159AA2	5.925 – 6.425	12	----	----	1.10	125	4	5
L137AA3	5.925 – 6.425	10	----	----	1.05	125	4	5
L137AA4	5.925 – 6.425	10	----	----	1.10	125	4	5
L137AA5	5.925 – 6.425	10	----	----	1.10	125	4	5
L112AA4	7.05 – 10.00	7	0.3	2.0	1.15	125	2	5
L90AA1	8.70 – 11.70	5	0.17	1.1	1.15	125	1.2	5

* *Mounted with flange up.*

1. *First numbers of Model Number designate waveguide size (see page 14 for explanation).*
2. *Coolant can be Ethylene Glycol or Water or any combination of the two to achieve the stated VSWR.*
3. *Minimum full power.*
4. *Anodizing of aluminum loads (provided at extra cost) is recommended if they are to be used with Ethylene Glycol.*
5. *Flanges are made to the latest revisions of EIA standard RS-271 and/or MIL-F-3922.*

CONNECTORS		APPROX. DIMENSIONS				
RF[5]	COOLANT	LENGTH (in.)	DIAM. (in.)	APPROX. WEIGHT (lb)	MAT'L	
CPR-770F	1" NPT Male	30.00	10.00	120	CU Alloy	L-BAND
CPR-650F	¾" NPT Male	23.00	9.00	35	Aluminum[4]	
CPR-650F	¾" NPT Male	23.00	9.00	70	CU Alloy	
CPR-650F	1½" NPT Male	23.00	9.00	90	CU Alloy	
CPR-770	1" NPT Male	30.00	10.00	120		
CPR-650F	¾" NPT Male	23.00	9.00	75	CU Alloy	
CPR-650F	¾" NPT Male	23.00	9.00	80	CU Alloy	
UG-437A/U	3/8" NPT Male	20.00	6.00	18	Aluminum	S-BAND
UG-437A/U	¾" NPT Male	20.00	6.00	35	CU Alloy	
CPR-430F	¾" NPT Male	20.00	6.00	35	CU Alloy	
CPR-430G	¾" NPT Male	20.00	6.00	18	Aluminum	
CPR-430F	¾" NPT Male	20.00	6.00	35	CU Alloy	
CPR-430F	¾" NPT Male	20.00	6.00	35	CU Alloy	
UG-54	¾" NPT Male	14.25	6.00	28	CU Alloy	
CPR-284F	¾" NPT Male	14.25	6.00	14	Aluminum	
Special Vacuum	¾" NPT Male	14.25	6.00	28	CU Alloy	
CPR-284F	¾" NPT Male	14.25	6.00	14	Aluminum	
UG-54	¾" NPT Male	14.25	6.00	28	CU Alloy	
CPR-284F	¾" NPT Male	14.25	6.00	28	CU Alloy	
UG-53	¾" NPT Male	14.25	6.00	28	CU Alloy	
UG-148	½" NPT Male	9.50	4.00	10	CU Alloy	C-BAND
UG-149	½" NPT Male	9.50	4.00	10	CU Alloy	
CPR-187F	½" NPT Male	9.50	4.00	10	CU Alloy	
UG-148	½" NPT Male	9.50	4.00	10	CU Alloy	
UG-149	8-8 FBTX	8.50	4.00	10	CU Alloy	
UG-149	½" NPT Male	9.50	4.00	10	CU Alloy	
UG-343	½" NPT Male	9.00	3.00	5	CU Alloy	
UG-343	½" NPT Male	9.00	3.00	5	CU Alloy	
CPR-159F	½" NPT Male	8.50	3.00	5	CU Alloy	
UG-344	½" NPT Male	8.87	3.00	5	CU Alloy	
CPR-137G	¾" UNF Male	8.75	3.00	5	CU Alloy	
UG-343	½" STD Pipe	9.06	3.00	5	CU Alloy	
CPR-112F	¼" NPT Male	7.00	3.00	4	CU Alloy	X
UG-40	¼" NPT Male	6.00	2.50	4	CU Alloy	

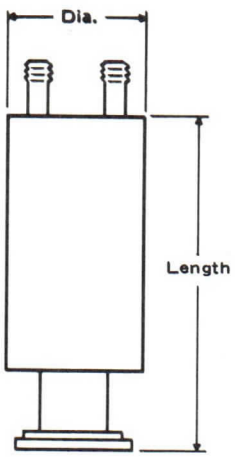

Model No.
L284AA7

high power broadband coaxial water loads

MODEL[1] NUMBER	FREQUENCY RANGE (GHz)	AVG. POWER (kW)	PRESSURIZED PEAK POWER – MW DRY AIR		MAX[3] VSWR	COOLANT CHARACTERISTICS			
			0 (lbf/in²g)	15[2] (lbf/in²g)		MAX OUTLET TEMP. (°C)	STATIC PRESS. TEST (lbf/in²g)	FLOW[4] RATE (gpm)	APPROX. TEMP. RISE (°C)
LC6EA3	0.20 – 0.75	300	3.0	- - - -	1.15:1	90	100	60	20
LC6EA4	0.20 – 0.75	300	3.0	10.0	1.15:1	90	100	60	20
LC3EA4	0.38 – 1.20	50	0.8	- - - -	1.15:1	90	100	10	20
LC3EA7	0.38 – 1.20	50	0.8	3.0	1.15:1	90	100	10	20
LC6EA2	0.35 – 0.75	300	3.0	- - - -	1.15:1	90	100	60	20
LC6EA1	0.35 – 0.75	300	3.0	10.0	1.15:1	90	100	60	20
LC3EA3	0.47 – 1.20	50	0.8	- - - -	1.15:1	90	100	10	20
LC3EA6	0.47 – 1.20	50	0.8	3.0	1.15:1	90	100	10	20
LC3EA2	0.67 – 1.20	50	0.8	- - - -	1.15:1	90	100	10	20
LC3EA5	0.67 – 1.20	50	0.8	3.0	1.15:1	90	100	10	20
LC1AA1	1.10 – 2.70	10	0.6	2.0	1.15:1	90	100	2	20
LC1AA2	1.50 – 4.00	3	0.15	0.5	1.20:1	90	100	1	20

1. *First numbers of Model Number designate waveguide size (see page 14 for explanation).*
2. *Maximum gas pressure is 15 lbf/in²g. In a pressurized system the gas pressure must not exceed the fluid pressure by more than 5 lbf/in².*
3. *See Data Sheet for VSWR vs Frequency for various coolant temperatures.*
4. *Minimum full power.*

calorimeters

MODEL NUMBER	MOUNTING	AVG. POWER (kW)	THERMOMETER RANGE INPUT (°C)	THERMOMETER RANGE OUTPUT (°C)	POWER/°C AT Q MAX FLOW (W/°C)
V4030-7A	19 in. rack	7.5	-1 – +51	+25 – +75	150
V4030-7B	Bench cab.	7.5	-1 – +51	+25 – +75	150
V4030-14A	19 in. rack	15.0	-1 – +51	+25 – +75	300
V4030-14B	Bench cab.	15.0	-1 – +51	+25 – +75	300
V4030-30A	19 in. rack	30.0	+25 – +75	+25 – +100	1400
V4030-30B	Bench cab.	30.0	-1 – +51	+25 – +75	1400

CONNECTORS		APPROX. DIMENSIONS			
RF	COOLANT	LENGTH (ft – in)	MAX DIAM. (in.)	APPROX. WEIGHT (lb)	NOTES
6-1/8" RS225	¾" – 11½" NPSH Male	12 – 9	9	112	Sampling loop – not pressurizable
6-1/8" RS225	¾" – 11½" NPSH Male	12 – 9	9	112	No sampling loop – Pressurizable
3-1/8" RS225	¾" – 11½" NPSH Male	12 – 8	6	38	Sampling loop – not pressurizable
3-1/8" RS225	¾" – 11½" NPSH Male	12 – 8	6	38	No sampling loop – pressurizable
6-1/8" RS225	¾" – 11½" NPSH Male	7 – 4	9	78	Sampling loop – not pressurizable
6-1/8" RS225	¾" – 11½" NPSH Male	7 – 4	9	78	No sampling loop – pressurizable
3-1/8" RS225	¾" – 11½" NPSH Male	6 – 8	6	25	Sampling loop – not pressurizable
3-1/8" RS225	¾" – 11½" NPSH Male	6 – 8	6	25	No sampling loop – pressurizable
3-1/8" RS225	¾" – 11½" NPSH Male	3 – 2	6	13.5	Sampling loop – not pressurizable
3-1/8" RS225	¾" – 11½" NPSH Male	3 – 2	6	13.5	No sampling loop – pressurizable
1-5/8" RS225	¾" – 14" NPT Male	2 – 0	4	14	No sampling loop – pressurizable
7/8" RS225	½" – 14" NPT Male	1 – 8	3	10	No sampling loop – pressurizable

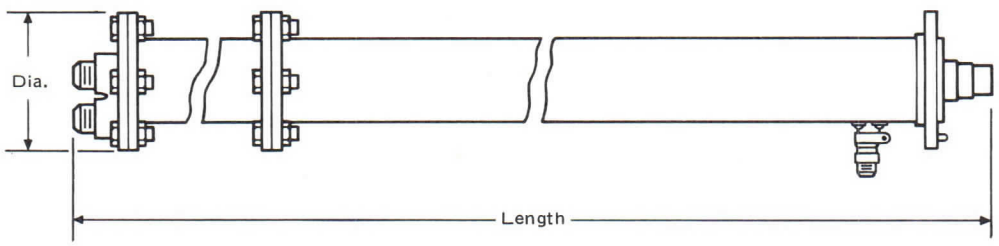

Model No. LC1AA1

MAX FLOW (gpm)	MAX INLET WATER PRESS. (lbf/in²g)	APPROX. DIMENSIONS WIDTH (in.)	HEIGHT (in.)	DEPTH (in.)	APPROX. WEIGHT (lb)
0.57	80	19	24.5	6	10
0.57	80	13	23.0	7	39
1.14	80	19	24.5	6	10
1.14	80	13	23.0	7	39
5.30	80	19	24.5	6	10
5.96	80	13	23.0	7	44

THERMOMETER WELLS

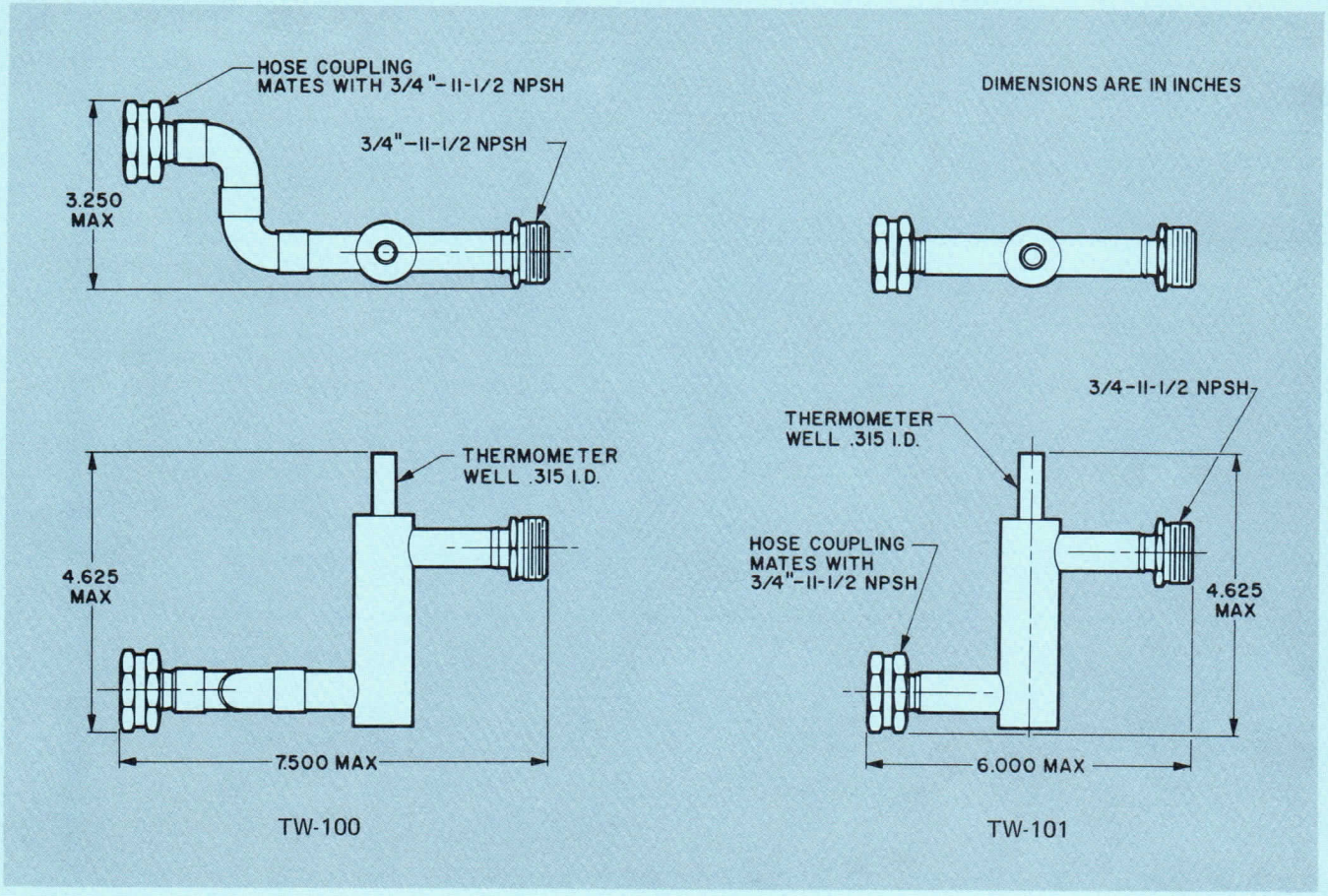

EXPLANATION OF WATER LOAD MODEL NUMBERS

Microwave Components Operation

L — Load

Product Code

F — Filter
L — Load
S — Switch
W — Window
C — Coupler
A — Attenuator
G — Flange
FC — Filter Coax
LC — Load Coax

430 — WR430 Waveguide

EIA Transmission Line Designation Code

62 — WR62
90 — WR90
112 — WR112
137 — WR137
187 — WR187
284 — WR284
430 — WR430
650 — WR650
770 — WR770
2100 — WR2100

Coax Line Sizes

C1 — 1-5/8"
C3 — 3-1/8"
C6 — 6-1/8"

Example: **L 430 A A 1**

A — Teflon Wedge. Family designation describing physical characteristic of product.

Family Code

A — Teflon wedge
B — Ceramic block
C — Ceramic wedge
D — Glass tube
E — Teflon tank
F — Special Ceramic

A — 100% of full standard rated power level established at time of initial development.

Rated Power Level Code

A — 100% standard rated power
B — 25% standard rated power
C — 50% standard rated power
D — 75% standard rated power
E — 125% standard rated power
F — 150% standard rated power

1 — A specific member of the "430AA" family of loads. Numbers are assigned consecutively starting with 1.

CALORIMETRIC MEASUREMENT INFORMATION

The flow rates given in the tables are for operation at the maximum rated average power shown, with coolant temperature rises as given. Average power, flow rate, and temperature rise may be varied (within the specified limits), but the value of any one of these is dependent upon the other two. This relationship is given by the expression

$$\Delta T = \frac{P}{0.264\ kF}$$

where

ΔT is the temperature rise in degrees Centigrade
P is the average rf power input in kilowatts
F is the flow rate in gallons per minute
k is a constant dependent on the type of coolant (k = 1 for water)

Flow rate requirements for operation at a specific average power level and inlet water temperature can be determined from the nomogram in the figure, for water and water-ethylene glycol mixtures. When making calorimetric measurements, this nomogram may be used to determine the approximate transmitter power from the observed values of coolant flow rate and temperature rise. An example is given by the dashed lines, where a temperature rise of 25°F at a flow rate of 9 gpm indicates an average power of 35 kW.

Varian calorimeters accurately measure the average rf power absorbed in high-power water loads. Each unit includes a water flow meter, a flow adjusting valve, a shut-off valve, and two thermometers; flexible plastic tubing connects the calorimeter to the water supply and the water load. The flow meter scale is calibrated in watts per degree Centigrade of temperature rise of distilled water. The product of the flow meter reading and the difference between the readings on the thermometers is the rf energy absorbed by the load.

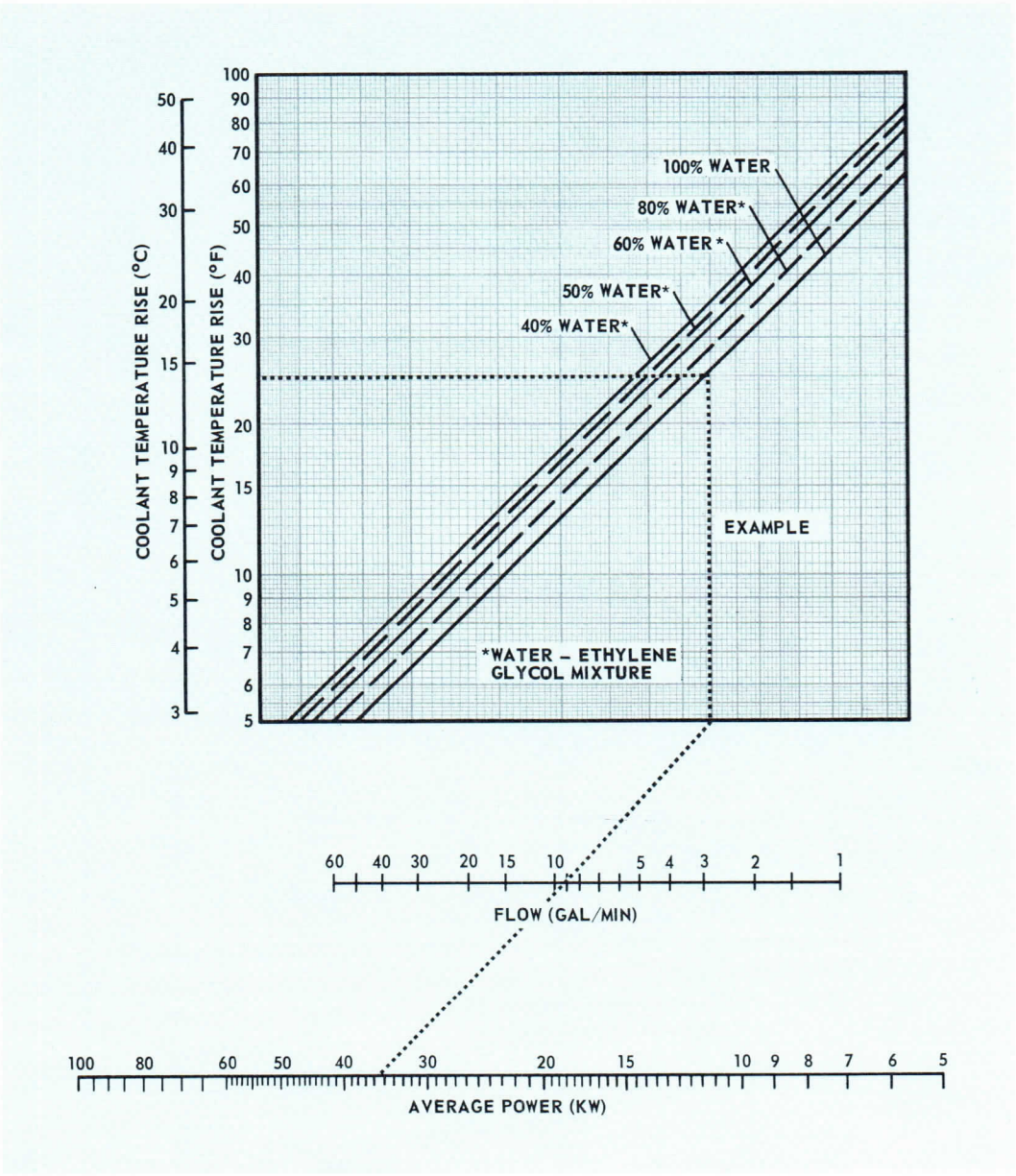

Nomogram of relationships between coolant temperature rise, flow rate, and average power.

varian electron tube and device group

U.S. SALES OFFICES

Atlanta
180 Allen Road, N.W.
Suite 202
Atlanta, Georgia 30328
TEL: (404) 252-0045

Clearwater Branch
314 South Missouri
Suite 205
Clearwater, Fla. 33516
TEL: (813) 446-8513

Boston
400 Wyman Street
Waltham, Mass. 02154
TEL: (617) 891-4560

Chicago
Executive Plaza Office Building
205 W. Touhy Avenue
Park Ridge, Illinois 60068
TEL: (312)825-6686

Dallas
Richardson Savings & Loan Bldg.
P. O. Box 689
558 S. Central Expressway
Suite 202
Richardson, Texas 75080
TEL: (214) 235-2385

Dayton
Southmoor Building
10 Southmoor Circle
Dayton, Ohio 45429
TEL: (513) 298-7318

Los Angeles
2901 Wilshire Boulevard
Santa Monica, Calif. 90403
TEL: (213) 828-5588

New York
25 Route 22
Springfield, New Jersey 07081
TEL: (201) 376-6600

Philadelphia
P.O. Box 256
1500 Kings Highway
Cherry Hill, N.J. 08034
TEL: (609) 428-6800

Phoenix
7117 Third Avenue
Scottsdale, Arizona 85251
TEL: (602) 947-5461

Albuquerque Branch
7100 Shoshone Rd. NE
Albuquerque, N.Mex. 87110
TEL: (505) 296-1248

San Francisco
4940 El Camino Real
Los Altos, Calif. 94022
TEL: (415) 968-7630

Syracuse
113 Twin Oaks Drive
Syracuse, New York 13206
TEL: (315) 437-2568

Washington, D.C.
4701 Lydell Drive
Cheverly, Maryland 20781
TEL: (301) 773-7010

INTERNATIONAL SALES OFFICES

Australia
Varian Pty. Ltd.
38 Oxley Street
Crows Nest
2065 New South Wales, Australia
TEL: 430-673

Varian Pty. Ltd.
679 Springvale Road
North Springvale, VICT. 3171
TEL: 560-7133

Benelux
Varian Benelux N.V.
Maassluisstraat 100
P.O. Box 9158
Amsterdam, Holland
TEL: (020) 15 94 10

Brazil
Varian Industria e Comercio Ltda.
Alameda Lorena 1834 ZC 5
Cerqueira Cesar
Sao Paulo, -SP-Brazil
TEL: 80-80-27

Canada
Varian Associates of Canada Ltd.
45 River Drive
Georgetown, Ontario, Canada
TEL: (416) 877-6901

France
Varian S.A.
Quartier de Courtaboeuf
Boite Postale No. 12
91 Orsay
France
TEL: 920-83-12

Germany
Varian GmbH
Breitwiesenstrasse 9
7 Stuttgart-Vaihingen
Germany
TEL: (0711) 73 20 28

Italy
Varian SpA
Via Varian
10040 Leini (Torino)
Italy
TEL: (02) 26 80 86

Japan
Marubun Co., Ltd.
1,2-Chome, Odemmacho
Nihombashi, Chuo-Ku
Tokyo, Japan
TEL: 662-8151

Scandinavia
Varian AB
Skytteholmsvägen 7D
P.O. Box 1099
Solna 1, Sweden
TEL: (08) 82 00 30

Switzerland
Varian AG
Steinhauserstrasse
6300 Zug, Switzerland
TEL: (042) 23 25 75

United Kingdom and Ireland
EMI-Varian Ltd.
Blyth Road
Hayes
Middlesex
England
TEL: 01-573 5555

Printed in U.S.A. Pub. No. 2684

varian
electron tube and device group

TECHNICAL DATA

LC3EA3

HIGH POWER COAXIAL WATER LOAD

470-1200 MHz

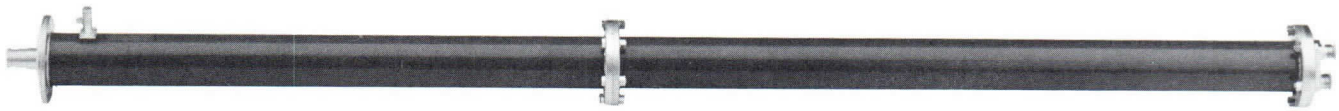

DESCRIPTION [1]

The LC3EA3 is a 3-1/8 inch coaxial water load for use as a dummy load and for making rapid calorimetric power measurements in UHF transmitters operating between 470 and 1200 megahertz. It is ideal for television transmitter applications. Average power of 50 kilowatts can be dissipated.

This water load is equipped with a sampling loop which provides a convenient r-f monitoring source. Measurement of r-f power by calorimetric means can be accomplished through the use of auxiliary temperature and flow measuring devices. Thermometer wells which are easily adaptable to the unit are available as optional accessories.

The r-f power is dissipated directly into the fluid in the load. Hence, the resistivity of the fluid affects the VSWR which the load presents. Because the resistivity of some fluids changes with temperature, the inlet temperature should be kept at about 25° C or the fluid should be doped with an agent such as sodium dichromate. Fluids with specific resistivities of 5000 ohm-centimeters or less produce excellent results.

GENERAL CHARACTERISTICS [2]

ELECTRICAL

Frequency Range
  Inlet Water Temperature
    at 25°C ..... 470 to 1200 MHz
Average Dissipation[3], maximum
  Inlet Water Temperature at 25°C ... 50 kW
VSWR, at 25°C, maximum[4,5] 1.15:1
R-F Connectors
  Coupling, 50-Ω ..... EIA Standard RS 225
  Sampling Loop, 50-Ω ..... Type N

ENVIRONMENTAL [6]

Non-operating Temperature ..... -62 to +75 °C

PHYSICAL

Dimensions ..... See Outline Drawings
Weight, approximate ..... 25 lb
Mounting Position[7] ..... Horizontal or R-F Connector Down
Coolant[5] ..... Water or Any Mixture of Ethylene Glycol and Water
  Coolant Capacity ..... 1.72 gal
  Outlet Temperature, typical ..... 70 °C
  Static Pressure[8] ..... 100 lbf/in^{2}g
Standard Finish ..... Red Copon Epoxy
Material ..... Copper Alloy and Teflon
Water Connection ..... See Outline Drawing

2265 12/69

Printed in U.S.A.

CHARACTERISTIC CURVES

Typical performance values

VSWR VARIATION WITH FREQUENCY

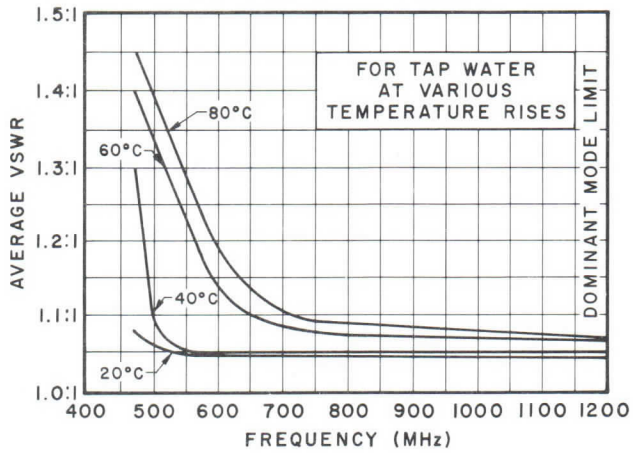

VSWR VARIATION WITH TEMPERATURE

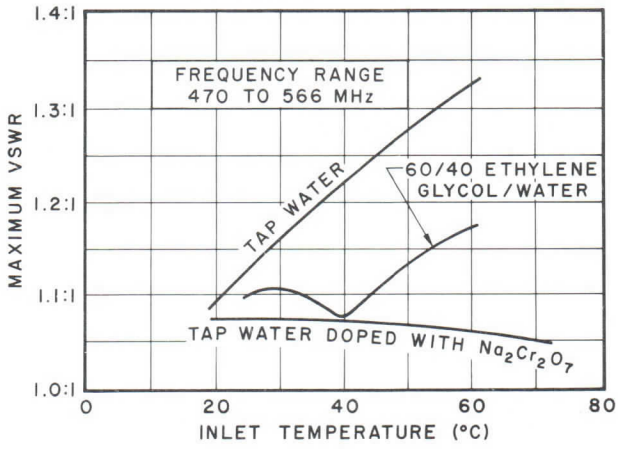

VSWR VARIATION WITH TEMPERATURE

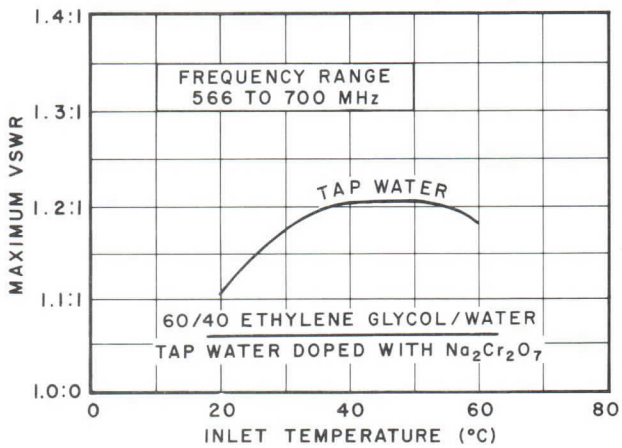

VSWR VARIATION WITH TEMPERATURE

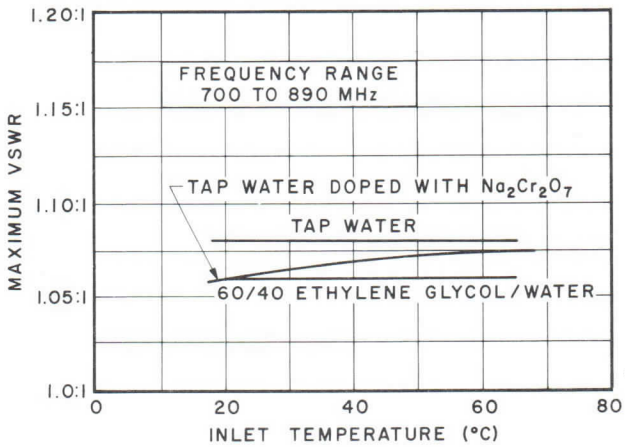

CONSTANT, k, FOR POWER FORMULA

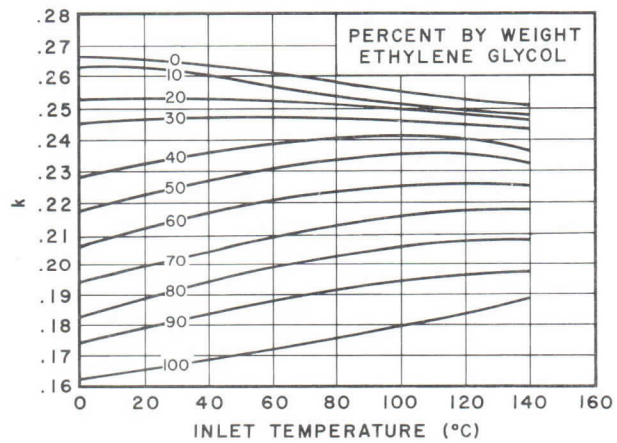

PRESSURE DROP VARIATION WITH FLOW

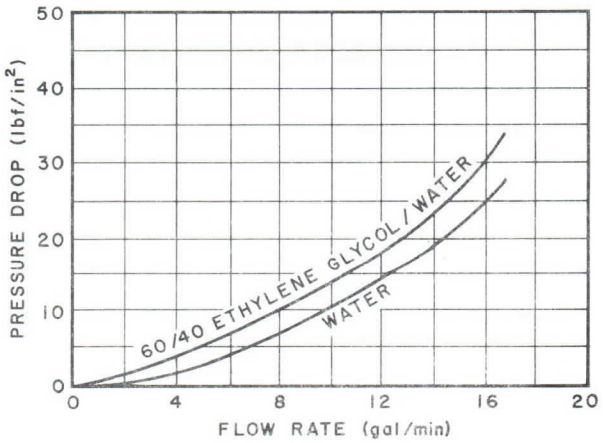

OUTLINE DRAWING

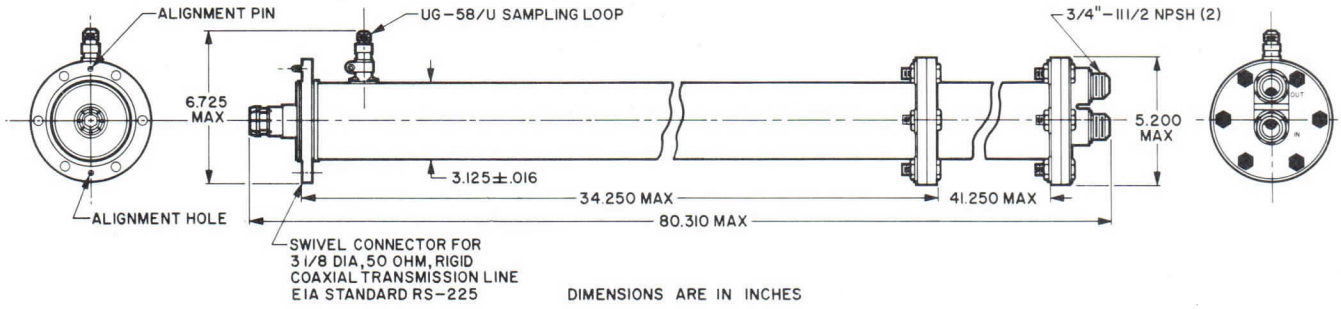

LC3EA3 WATER LOAD

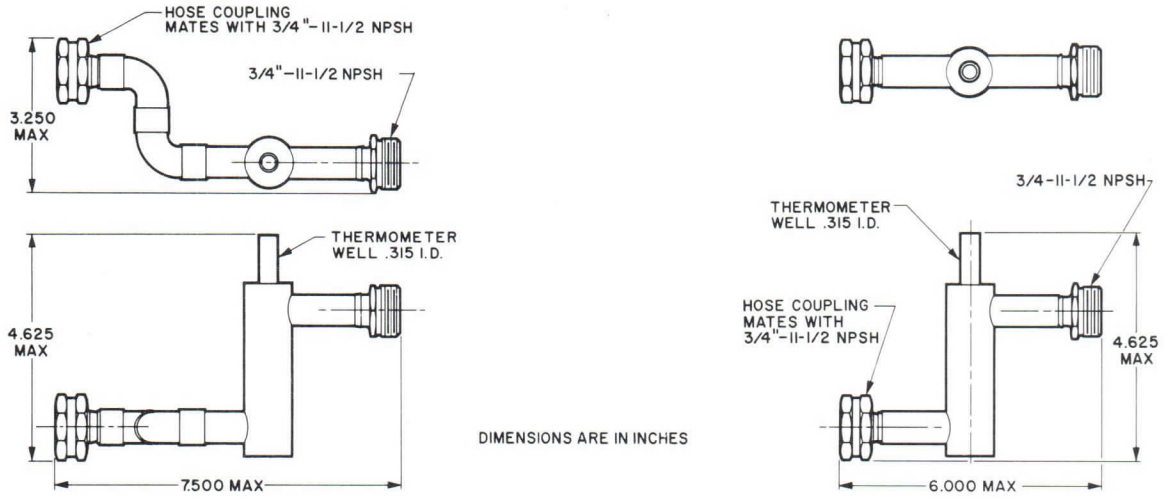

TW-100 **TW-101**

THERMOMETER WELLS

NOTES:

1. This load can be modified to meet other specifications.
2. Characteristics are based on performance values. These figures may change as a result of additional data or product refinement. Varian Microwave Components Operation should be consulted before using this information for equipment design.
3. With appropriate inlet and outlet temperature measuring devices, r-f power can be measured accurately. Power is calculated by the following formula:

$$P = k \times F \times (T_2 - T_1)$$

where

P = power in kilowatts
k = fluid constant (0.264 for water at 25°C)
F = flow rate in gallons per minute
T_1 = inlet coolant temperature in °C.
T_2 = outlet coolant temperature in °C.

4. The VSWR at the lower end of the frequency range increases with higher inlet water temperature. (See VSWR VARIATION WITH FREQUENCY Curve.)
5. VSWR values differ for various coolant mixtures and inlet temperatures. Typical VSWR values for different mixtures and inlet temperatures are shown in the characteristic curves. To achieve low VSWR operation at inlet temperatures between 20 and 70°C, a mixture should have a resistivity of 2000 and 3000 ohm-centimeters. With water, this resistivity can be obtained by doping with sodium dichromate ($Na_2Cr_2O_7$) at a ratio of about 20 parts per million. With recommended mixtures of ethylene glycol and water, doping with sodium dichromate is helpful but not mandatory.
6. For special environmental requirements, contact your local Varian Sales Office or the Palo Alto Tube Division.
7. If the water load is used to measure power below 50 kilowatts at a reduced flow rate, the water-fitting end of the load must be elevated at least 6 inches above horizontal, to prevent entrapment of air bubbles which could damage the load.
8. Gas pressure must not exceed the fluid pressure by more than 5 lbf/in^{2}g.

varian

TECHNICAL DATA

ICL-4 Series

WIDE DYNAMIC RANGE INTEGRATED CIRCUIT LOG AMPLIFIERS

90-600 MHz

DESCRIPTION

ICL-4 logarithmic amplifiers are hybrid, integrated circuit, video i-f amplifiers which can cover the frequency range of 90 to 600 megahertz in a single unit. They are ideal for use in electronic-warfare and radar systems as well as monopulse tracking receivers. Each provides exceptional log linearity and stability over a wide temperature range. Unit-to-unit reproducibility is good and amplifiers can be supplied as matched pairs with the log-video amplitude matched to the input within ±1 dB over the entire frequency and dynamic range. Simple filtering is added when required to limit noise bandwidth of the i-f output.

The ICL-4 incorporates the Beverly Division's extensive experience in manufacturing hybrid integrated circuits. Reflow soldering techniques are used in assembly because of their proven reliability. Amplifiers can be supplied as standard humidity protected circuits or can be hermetically sealed. Excellent stability against oscillations has been achieved using a novel grounding scheme and broadband performance results from the use of modern computer-aided design.

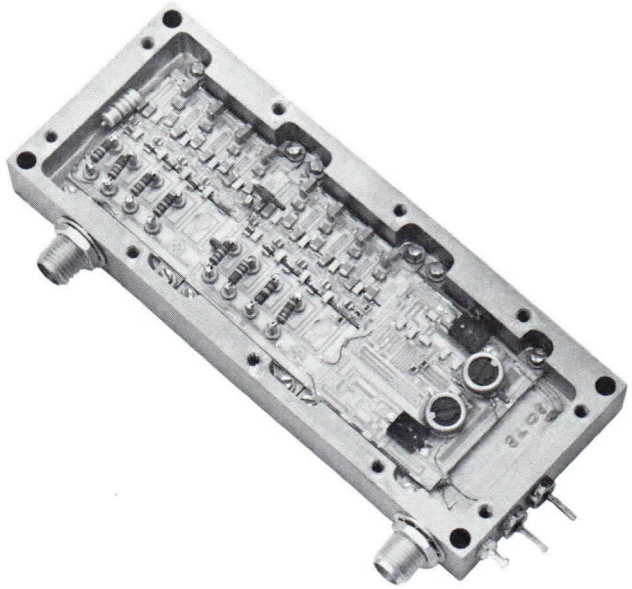

OPTIONS

- Hermetic sealing
- High temperature operation — to 85° C
- Dynamic Range of 80 dB
- Units matched within ±1 dB over selected frequency and dynamic ranges

GENERAL CHARACTERISTICS[1]

Frequency Range[2]	90-600 MHz
Input Dynamic Range	
Between -75 and +5 dBm	Any 70 dB
Log Linearity[3] over dynamic range and selected frequency bands	±1 dB
Log Slope(Sensitivity)	22 to 50 mV/dB
Rise Time	
With 30 mV/dB log slope, max	20 ns
With 50 mV/dB log slope, max	35 ns
Fall Time, max	150 ns
Input VSWR(relative to 50 Ω source)	
For any 100 MHz band	1.5:1
For any 500 MHz band	2.0:1
Limited I-F Output, ±1 dB	0 dBm
Gain to IF, typ	70 dB
I-F Output Load Impedance, nom	50 Ω
Video Output, d-c coupled into 93 Ω load	
With 30 mV/dB log slope[4]	0 to 2.2 Vdc
With 50 mV/dB log slope	0 to 3.5 Vdc
Noise Figure	
Maximum	10 dB
Typical	7 dB
D-C Offset	0 ± 100 mV
Operating Temperature	-30 to +70 °C
Power Supplies Required	
Voltage, at 80 mAdc, max	+12 Vdc
Voltage, at 125 mAdc, max	-12 Vdc
or	
Voltage, at 80 mAdc, max	+15 Vdc
Voltage, at 125 mAdc, max	-15 Vdc
Dimensions	See Outline Drawings
Weight, max	4 oz/114 g

3575 3/78

Printed in U.S.A.

GENERAL CHARACTERISTICS (cont.)[1]

Table I

Center Frequency[5] (MHz)	Bandwidth[5] (MHz)	Type Number[5]
160	50	ICL-4-160-50-50
160	100	ICL-4-160-100-50
160	140	ICL-4-160-140-50
200	50	ICL-4-200-50-50
200	100	ICL-4-200-100-50
200	200	ICL-4-200-200-50
240	100	ICL-4-240-100-50
240	200	ICL-4-240-200-50
240	300	ICL-4-240-300-50
300	100	ICL-4-300-100-50
300	200	ICL-4-300-200-50
300	300	ICL-4-300-300-50
300	400	ICL-4-300-400-50
350	100	ICL-4-350-100-50
350	200	ICL-4-350-200-50
350	300	ICL-4-350-300-50
350	400	ICL-4-350-400-50
350	500	ICL-4-350-500-50
400	100	ICL-4-400-100-50
400	200	ICL-4-400-200-50
400	300	ICL-4-400-300-50
400	400	ICL-4-400-400-50

NOTES:

1. Characteristics and performance curves are based on tests performed at 25°C, unless otherwise specified. These values may change without notice as the result of additional data or product refinement. The Varian Beverly Division should be consulted before using this information for final equipment design.

2. These amplifiers can cover the entire range instantaneously or can be optimized for a specific band. Typical ranges are shown in Table I.

3. For full temperature range operation, add ±0.5 dB.

4. At 30 mV dB, the video output can drive loads as low as 50 Ω.

5. When ordering, construct the type number as shown below. Specify the desired series designation, ICL-4A or ICL-4B (see outline drawings), center frequency, and bandwidth. Other center frequencies can be furnished on special order. Also, specify limited i-f output if desired.

ORDERING INFORMATION[5]

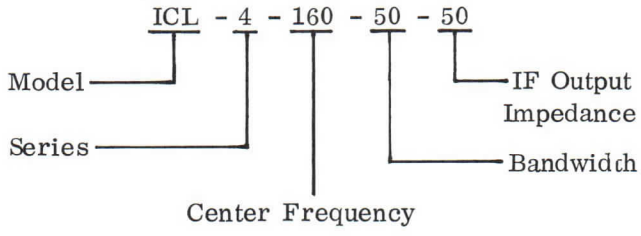

CHARACTERISTIC CURVES[1]

Typical Performance Values at 25°C

VIDEO OUTPUT CHARACTERISTICS

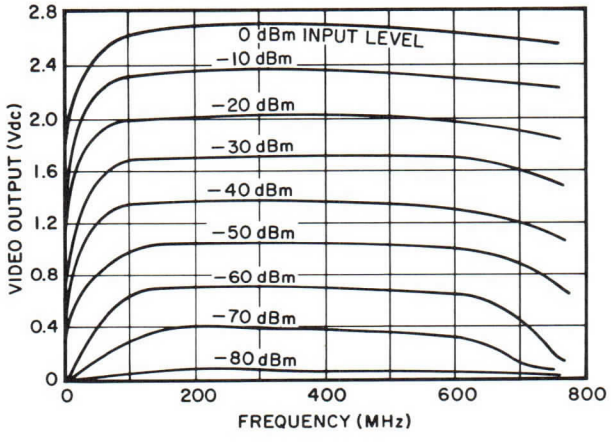

VIDEO OUTPUT VARIATION WITH INPUT POWER

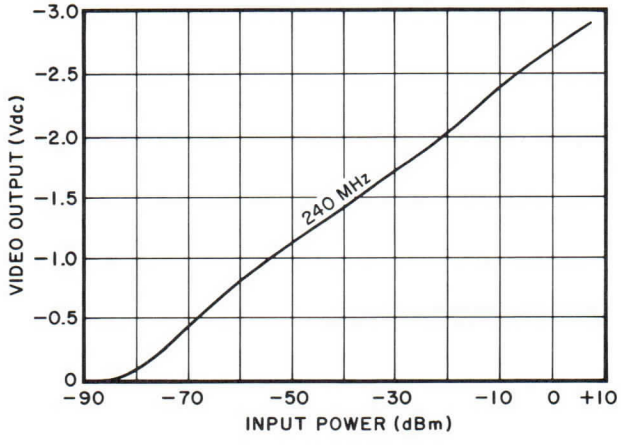

CHARACTERISTIC CURVES (cont.)[1]

PULSE RISE TIME (20 ns)

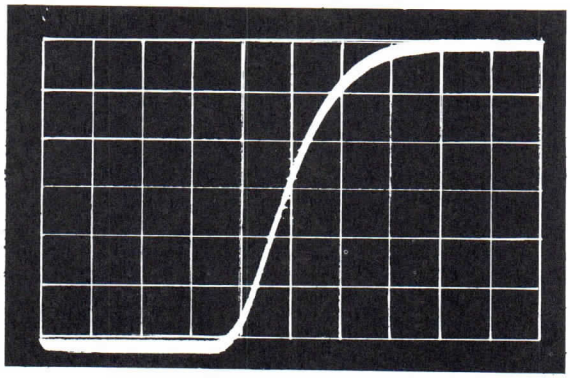

10 ns/div

Input Power: -50 dBm

PULSE RISE AND FALL TIMES

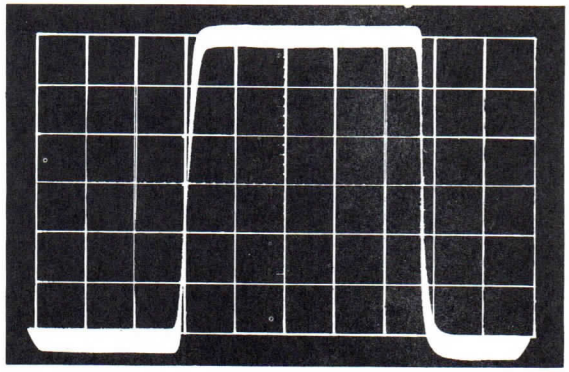

100 ns/div

OUTLINE DRAWINGS[3]

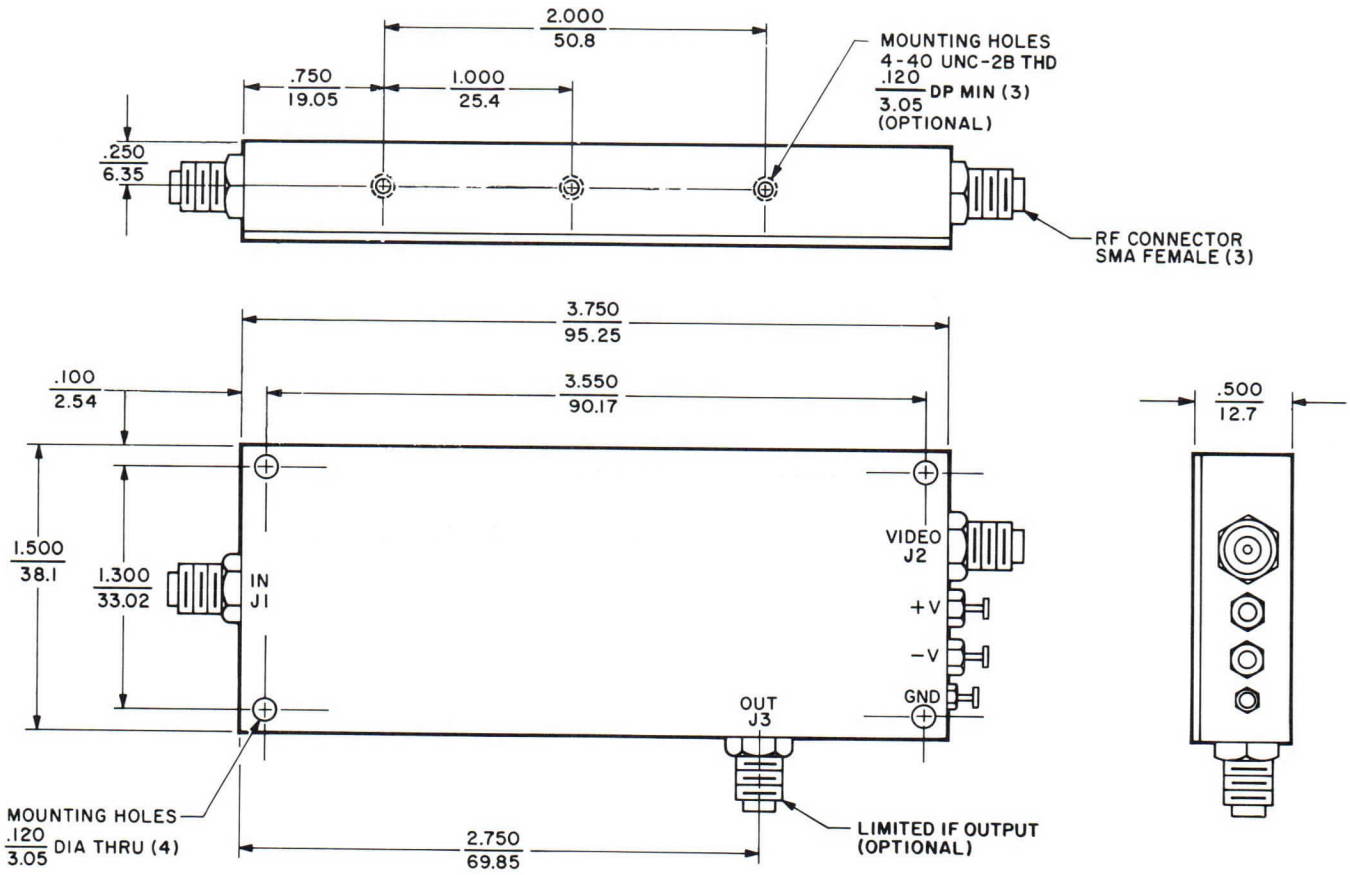

DIMENSIONS: ← inch / mm →

ICL-4A

OUTLINE DRAWINGS (cont.)[3]

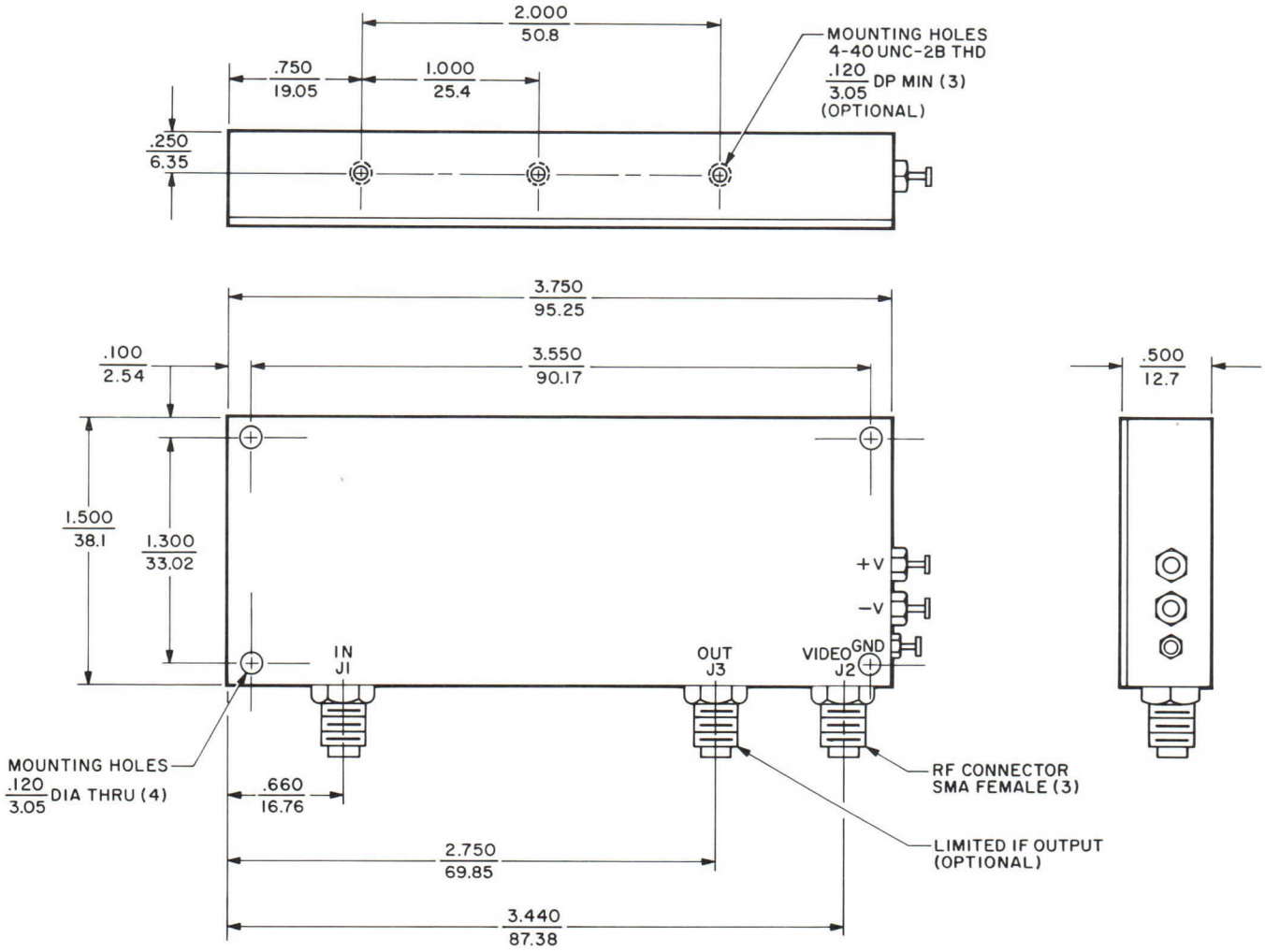

DIMENSIONS: ← inch / mm →

ICL-4B

varian
electron tube and device group

TECHNICAL DATA

LC6EA1
LC6EA2

HIGH POWER COAXIAL WATER LOAD

350-750 MHz

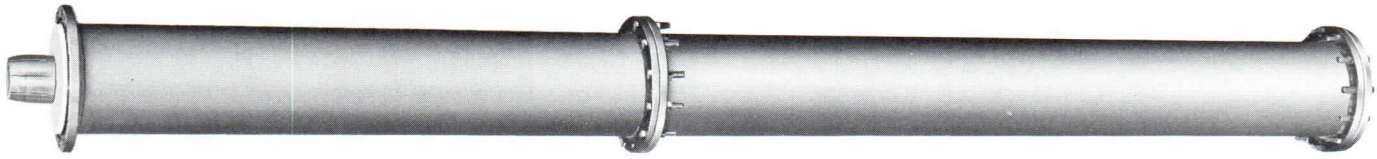

DESCRIPTION[1]

The LC6EA1 and LC6EA2 are 6-1/8 coaxial water loads for use as dummy loads and for making rapid calorimetric power measurements in UHF transmitters operating between 350 and 750 megahertz. These water loads are ideal for UHF television transmitter applications where average power of up to 300 kilowatts must be dissipated.

The LC6EA2 is equipped with an adjustable sampling loop which provides a convenient r-f monitoring source. Measurement of r-f power by calorimetric means can be accomplished through the use of auxiliary temperature and flow measuring devices. Thermometer wells, which easily adapt to these units, are available as optional accessories.

The LC6EA1 does not have an r-f sampling loop but is otherwise physically identical to type LC6EA2. This allows the LC6EA1 to be pressurized for high peak power applications. When pressurized to 15 lbf/in^{2}g with dry air, the unit can be used with devices generating peak powers up to 10 megawatts.

The r-f power is dissipated directly into the fluid in the load. Hence, the resistivity of the fluid affects the VSWR which the load presents. Because the resistivity of some fluids changes with temperature, the inlet temperature should be kept at about 25 °C or the fluid should be doped with an agent such as sodium dichromate. Fluids with specific resistivities of 5000 ohm-centimeters or less produce excellent results.

GENERAL CHARACTERISTICS[2]

ELECTRICAL

Frequency Range
  Inlet Water Temperature
    at 25 °C ..... 350 to 750 MHz
Average Dissipation, maximum[3]
  Inlet Water Temperature
    at 25 °C ..... 300 kW
VSWR, at 25 °C, maximum[4] 1.15:1
R-F Connectors
  Coupling, 50-Ω ..... EIA STD Swivel Flange
  Sampling Loop, 50-Ω ..... Type N,female

ENVIRONMENTAL[5]

Non-operating Temperature ... -62 to +75 °C

PHYSICAL

Dimensions ..... See Outline Drawings
Weight, approximate ..... 78 lb
Mounting Position[6] ..... Horizontal or R-F Connector Down
Cooling ..... Water or Any Mixture of Ethylene Glycol and Water
  Coolant Capacity ..... 7.5 gal
  Outlet Temperature, typical ..... 70 °C
  Static Pressure[7] ..... 60 lbf/in^{2}g
Standard Finish ..... Red Copon Epoxy
Material ..... Copper Alloy and Teflon
Water Connection ..... See Outline Drawings

2277 1/70

Printed in U.S.A.

palo alto tube division/611 hansen way/palo alto/california 94303

CHARACTERISTIC CURVES

Typical performance values

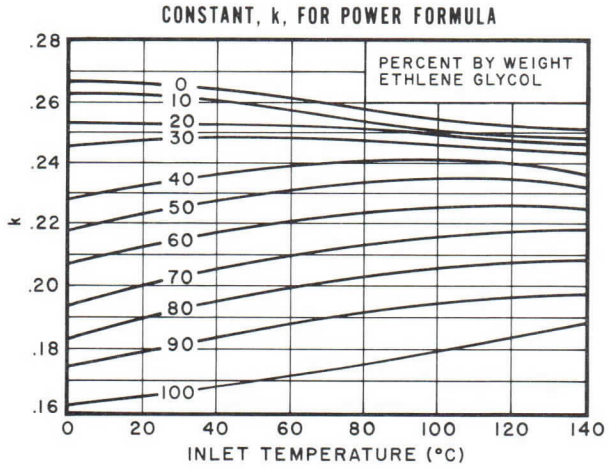

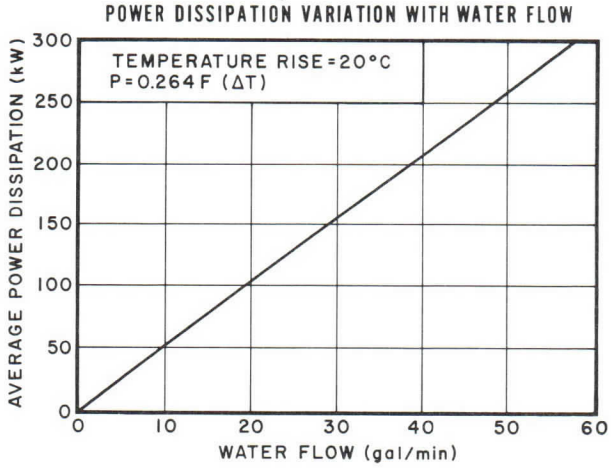

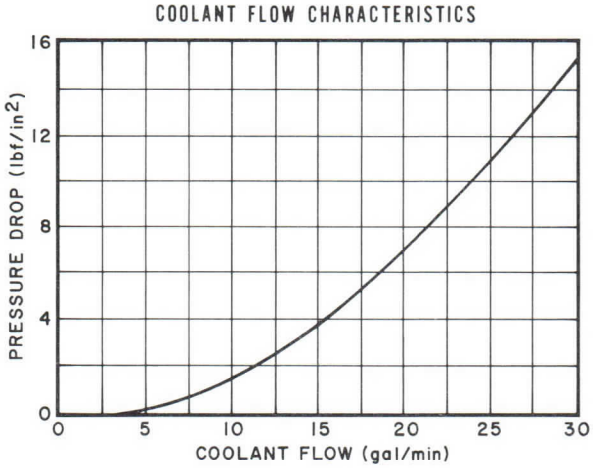

NOTES:

1. This load can be modified to meet other specifications.

2. Characteristics are based on performance values. These figures may change without notice as a result of additional data or product refinement. Varian Microwave Component Operation should be consulted before using this information for equipment design.

3. With appropriate inlet and outlet temperature measuring devices, r-f power can be measured accurately. Power is calculated by the formula:

$$P = k \times F \times (T_2 - T_1)$$

where

P = power in kilowatts
k = fluid constant (0.264 for water at 25 °C)
F = flow rate in gallons per minute
T_1 = inlet coolant temperature in °C
T_2 = outlet coolant temperature in °C

4. VSWR values differ for various coolant mixtures and inlet temperatures. To achieve low VSWR operation at inlet temperatures between 20 and 70 °C, a mixture should have a resistivity of 5000 ohm-centimeters or less. With water, this resistivity can be obtained by doping with sodium dichromate ($Na_2Cr_2O_7$) at a ratio of about 20 parts per million. With recommended mixtures of ethylene glycol and water, doping with sodium dichromate is helpful but not mandatory.

5. For special environmental requirements, contact your local Varian Sales Office or the Palo Alto Tube Division.

6. If the water load is used to measure power below 300 kilowatts at a reduced flow rate, the water-fitting end of the load must be elevated at least 6 inches above horizontal to prevent entrapment of air bubbles which could damage the load.

7. Gas pressure must not exceed the fluid pressure by more than 5 lbf/in^{2}g.

OUTLINE DRAWINGS

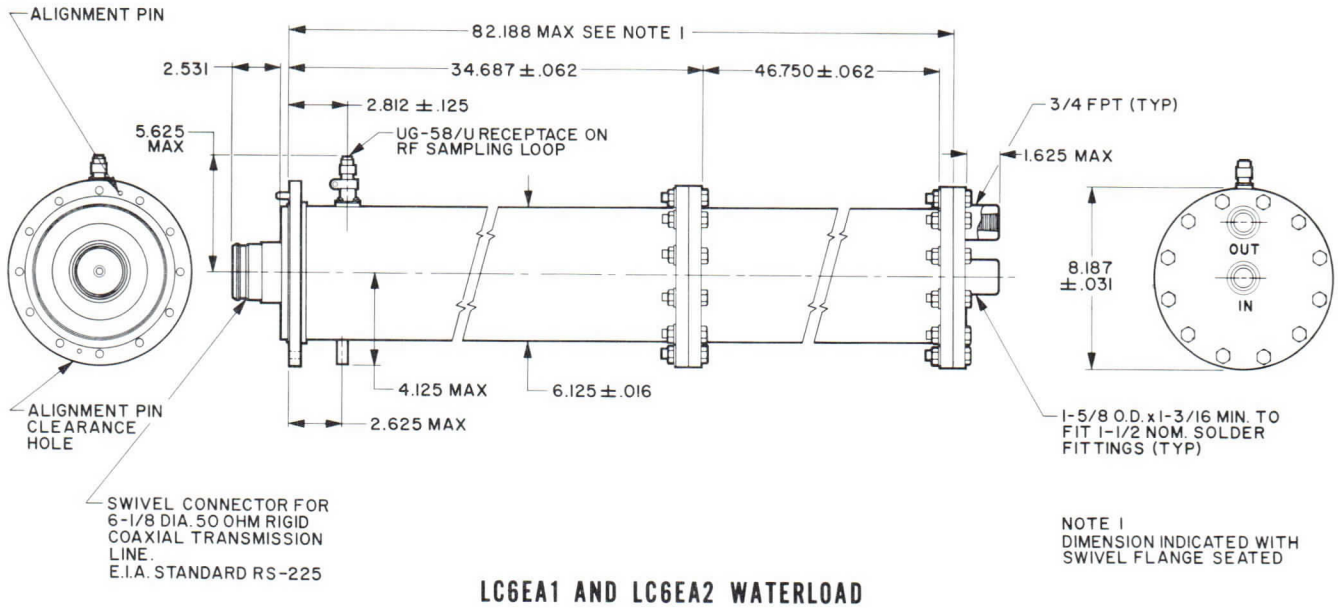

LC6EA1 AND LC6EA2 WATERLOAD

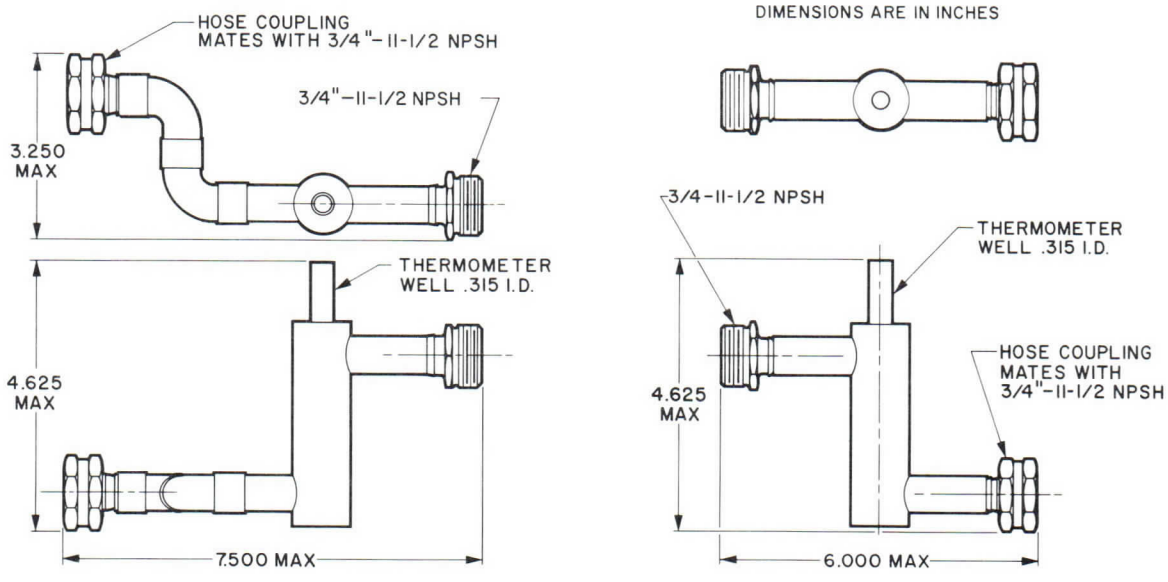

TW-100 TW-101

THERMOMETER WELLS

varian

HIGH POWER WR90 (X-BAND) WATER LOAD

L90DA1

DATA SHEET

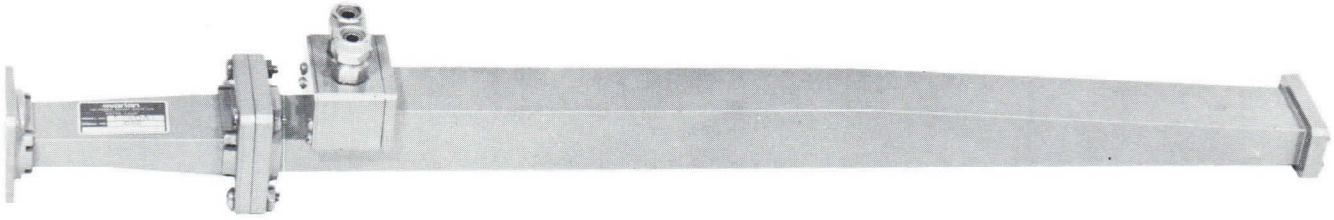

DESCRIPTION

The Varian L90DA1 water load is a high power termination for a WR90 waveguide system. This unit is designed to absorb 8 kW average power for use in either a calorimetric[1] power measurement system or as a means of disposing RF energy in the 7.1 to 12.4 GHz frequency range. It is comprised of a L112DA1 water load, and a tapered waveguide transition (V8301) from a WR112 waveguide to a WR90 waveguide. The input to the combination is a standard UG/39U flange.

Features of the L90DA1 water load are: low VSWR over a very broad band, high power dissipation, rapid response to changes in RF power, highly efficient energy conversion system, complete RF shielding, optional gas pressure sealing,[2] light weight, and calorimetric operation for accurate power measurements.[3]

This type load is ideally suited for systems which require very broadband application (i. e., where 50 to 75% bandwidth is required). It is also used extensively in laboratories to measure power output of tubes. The design of the load (which allows RF energy to be absorbed directly in a small quantity of water, contained in glass tubing) minimizes the response time to 5 s. Power can be measured to within 1% accuracy, not including any metering tolerance.

GENERAL CHARACTERISTICS (Note 4)

ELECTRICAL

Frequency Range	7.1 – 12.4 GHz
Average Power, max	8 kW
Peak Power, max (dry air -14.7 lbf/in^{2}a)	0.3 MW
VSWR, over frequency range	1.15:1
Time Lag, to reach stability after change in RF power	5 s

Note: For special MIL standard environmental operating conditions such as shock, vibration, salt atmosphere, altitude, temperature, etc, contact Varian-CAO.

PHYSICAL

Dimensions	See outline drawing
Weight	2.6 lb
Water Flow, typical for 5 kW dissipation	1 gal/min
Water Temperature Rise, typical for 5 kW dissipation	19 °C
Water Pressure Drop, 1 gal/min	5 lbf/in^{2}g
Inlet Water Pressure, max	75 lbf/in^{2}g
Outlet Water Temp, max	75 °C
Mounting Position	Any
RF Connector	UG-39/U
Water Connectors (2)	Accept plastic tubing 3/8-inch OD x 1/17-inch wall.

SYSTEM REQUIREMENTS

A coolant system capable of providing a flow of 1 gal/min at a pressure greater than 5 lbf/in^{2}g is required. When the water load is used as a dummy load, the coolant may be water, water-alcohol mixture, etc. For use as a calorimeter, distilled water is recommended since the specific heats of the mixtures vary greatly with both concentration and temperature. Calorimetric techniques using coolants other than distilled water are outlined in the Operating Instructions, document ML-1034.

Power is calculated by the following formula:

$$P = (0.264)(F)(T_2 - T_1)$$

where,

P = power in kW

0.264 = a constant including the specific heat of distilled water

F = flow in gal/min

T_2 = temperature of outlet water, °C

T_1 = temperature of inlet water, °C

Pub. 1663 2/67

Printed in U.S.A.

L90DA1

CHARACTERISTIC CURVES

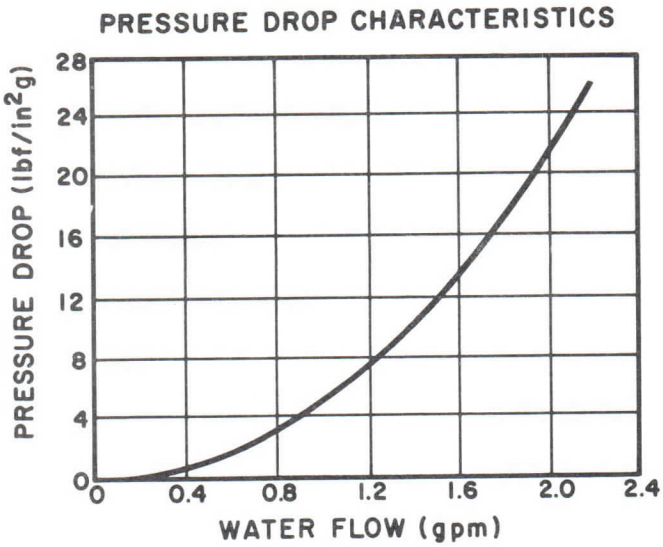

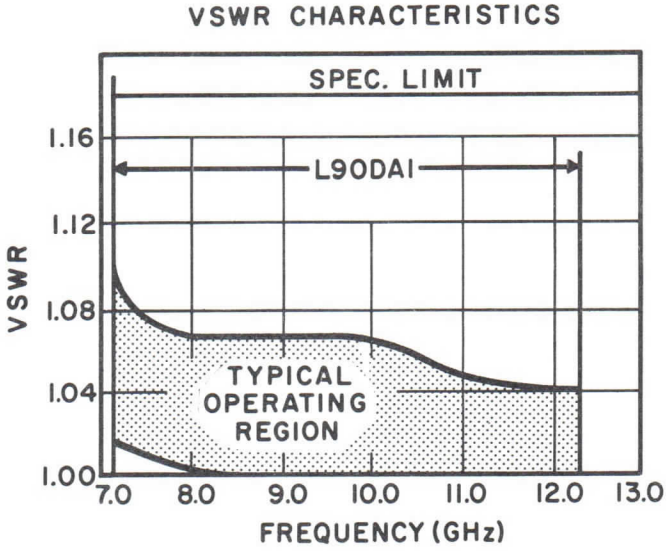

OUTLINE

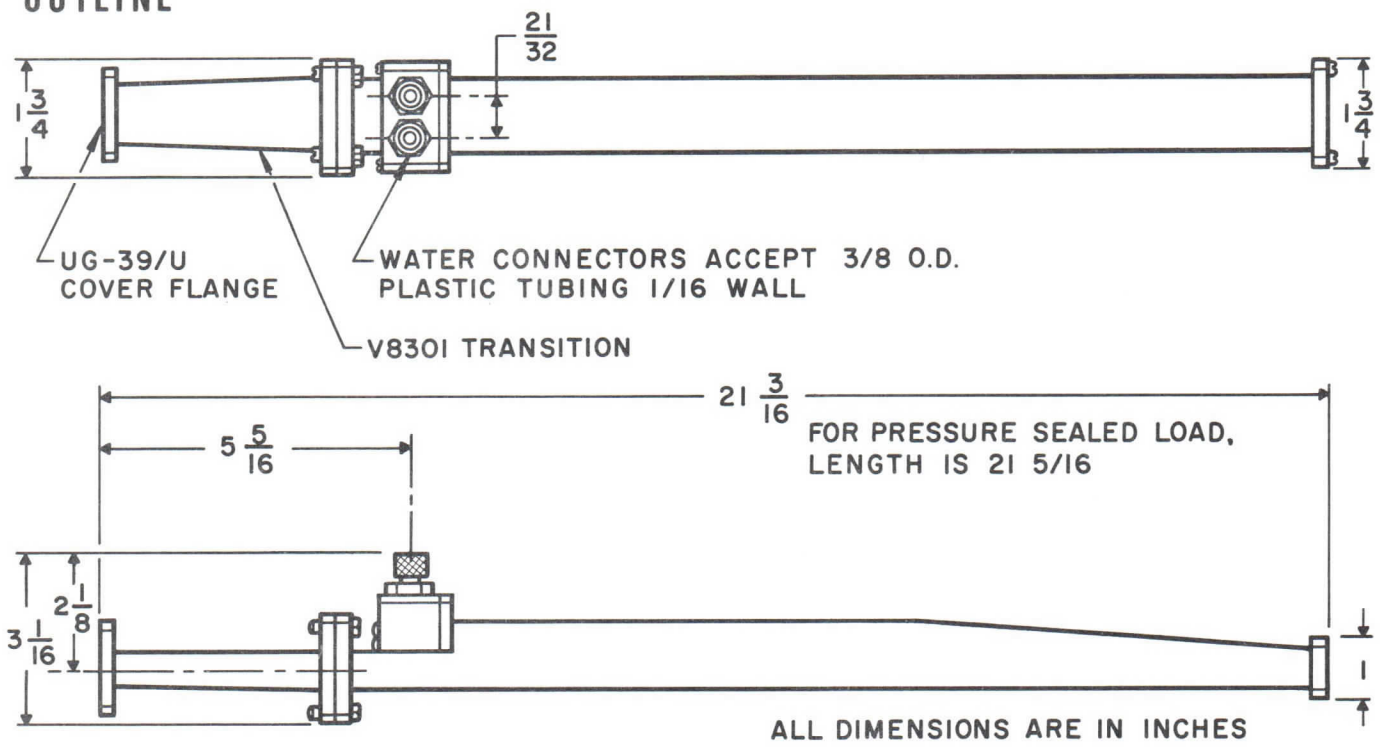

NOTES:

1. The Varian V-4030 calorimeter consists of a water flow meter, flow adjusting valve, flow shutoff valve, and two thermometers mounted on a 19-inch rack panel or in a portable cabinet. The L90DA1 water load with thermometers and a flow regulator mounted directly upon the load is also available at additional cost.

2. The L90DA1 water load, capable of maintaining gas pressure to 30 lbf/in^2g, is available upon request at a slight increase in price.

3. For further information concerning use of this and other Varian loads in calorimetric power measurements, please refer to the nomogram in Varian catalog MD-068.

4. This water load can be modified to meet other specifications.

varian
electron tube and device group

TECHNICAL DATA

L112BB5

HIGH POWER
MICROWAVE WATER LOAD

7.9-8.4 GHz

DESCRIPTION

The L112BB5 ceramic-block water load is a dummy termination for WR112 waveguide. It is ideal for use as a dummy load and for making rapid calorimetric power measurements in high-power military satellite communication transmitters operating between 7.9 and 8.4 gigahertz. This load dissipates up to 15 kilowatts of CW power. Higher power can be handled with design modifications. Very small and sturdy, the L112BB5 consists of a waveguide flange, a ceramic-block window, and a small metal tank. Life expectancy is at least 20,000 hours.

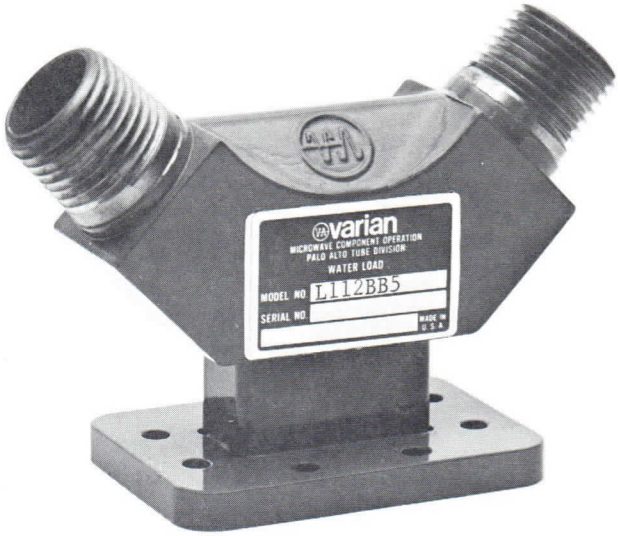

GENERAL CHARACTERISTICS[1]

ELECTRICAL

Frequency Range ..... 7.9-8.4 GHz
Power Dissipation, CW, maximum .... 15 kW
VSWR, maximum 1.10:1

ENVIRONMENTAL[2]

Operating
- Duty ..... Continuous
- Ambient Temperature ..... -28 to +65 °C
- Relative Humidity, including water and frost condensation 95%

Non-Operating
- Temperature ..... -62 to +75 °C
- Altitude ..... No limit
- Shock, 50 G, 11 ± 1 ms ... Per MIL-STD-202, Method 202
- Vibration, normal mounting ..... Per MIL-STD-202, Method 201

PHYSICAL

Dimensions ..... See Outline Drawing
Weight, approximate ..... 1.1 lb
Mounting Position ..... Any
Coolant, by weight ..... 15 ± 5% ethylene glycol
85 ± 5% water
- Input Temperature Range ..... 55 to 65 °C
- Flow, minimum, for 15 kW ..... 2.9 gal/min
- Pressure Drop, 2.9 gal/min .... 2.0 lbf/in^2
- Temperature Rise, maximum ..... 20 °C
- Outlet Temperature, typical ..... 80 °C
- Static Pressure ..... 150 lbf/in^{2}g

Standard Finish
- Exterior Surface ..... Red Copon Epoxy

Material ..... OFHC Copper, Al_2O_3 Ceramic, and Bronze

OUTLINE DRAWING[3]

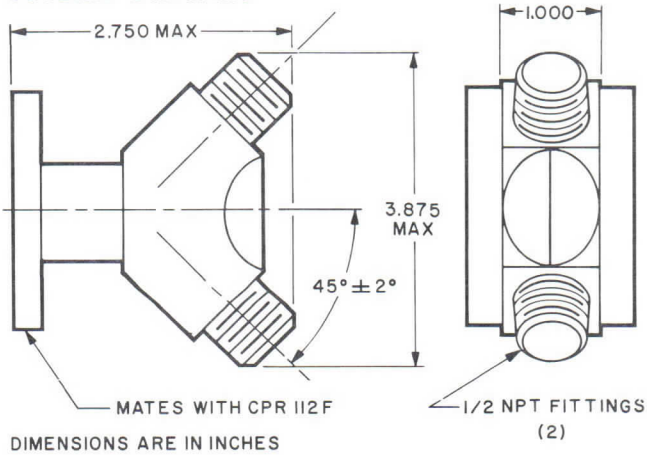

NOTES:

1. Characteristics are based on performance tests. These values may change without notice as a result of additional data or product refinement. Contact your local Varian Sales Office or the Palo Alto Tube Division before using this information for equipment design.
2. For special environmental requirements, contact your local Varian Sales Office or the Palo Alto Tube Division.
3. The waveguide flange meets the dimensional requirements of the latest issue of EIA Standard RS-271.

2038 1/69

Printed in U.S.A

APPLICATION NOTE

COOLING

Operation of the load at maximum CW power requires a liquid cooling system capable of providing 2.9 gal/min against a pressure drop of about 2 lbf/in^2 with a temperature rise of 20°C. The coolant must be an ethylene glycol/water mixture (15/85 by weight, within 5%.) Although this load requires the ethylene glycol/water coolant, production design changes can be made to compensate for any combination of coolant mixtures and operating temperature ranges. Power, flow rate, and temperature rise are interdependent, but may be varied within specified limits. With appropriate inlet and outlet temperature measuring devices and depending upon the calorimeter used, r-f power can be accurately measured. R-f power can be calculated by the following formula:

P (kW) = k x Flow Rate (gal/min) x Temp. Rise (°C)

For a 15/85 ethylene glycol/water mixture, constant k is 0.254 at an inlet temperature of 60°C. Constant k values for various mixtures at inlet temperatures from 0 to 140°C can be determined from the "Characteristic Curves."

CHARACTERISTIC CURVES

Typical performance values

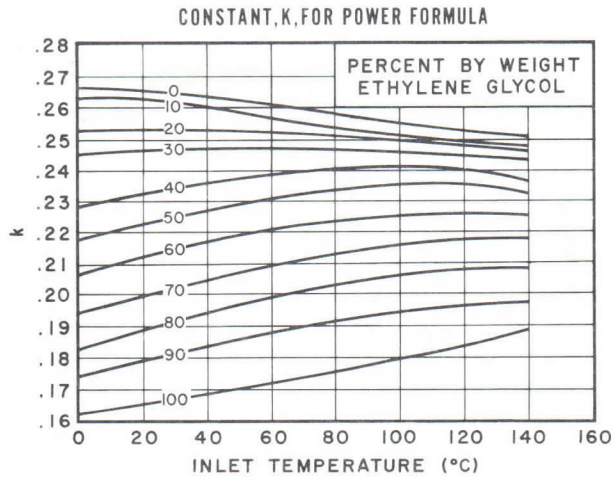

varian

TECHNICAL DATA

L112BC7

HIGH POWER MICROWAVE WATER LOAD

7.9-8.4 GHz

DESCRIPTION

The L112BC7 ceramic-block water load is a dummy termination for WR112 waveguide. It is ideal for use as a dummy load and for making rapid calorimetric power measurements in high-power military satellite communication transmitters operating between 7.9 and 8.4 gigahertz.

This load dissipates up to 10 kilowatts of CW power. Higher power can be handled with design modifications. Very small and sturdy, the L112BC7 consists of a waveguide flange, a ceramic-block window, and a small metal tank. Life expectancy is at least 20,000 hours.

GENERAL CHARACTERISTICS [1]

ELECTRICAL

Frequency Range ..... 7.9-8.4 GHz
Power Dissipation, CW, max ..... 10 kW
VSWR, max 1.15:1

ENVIRONMENTAL [2]

Operating
- Duty ..... Continuous
- Ambient Temperature ..... -20 to +65 °C
- Relative Humidity, including water and frost condensation ..... 95 %

Non-Operating
- Temperature ..... -62 to +75 °C
- Altitude ..... No limit
- Shock, 50 G, 11±1 ms ..... Per MIL-STD-202, Method 202
- Vibration, normal mounting ... Per MIL-STD-202, Method 201

PHYSICAL

Configuration [3] ..... See Outline Drawing
Weight, approximate ..... 1.1 lb/500 g
Mounting Position ..... Any
Coolant ..... Water
- Input Temperature Range ..... 5 to 45 °C
- Flow, minimum, for 10 kW ..... 2.0 gal/min(0.12 l/s)
- Pressure Drop, max at 2.0 gal/min.. 2.0 lbf/in^2(0.14 kgf/cm^2)
- Temperature Rise, max ..... 20 °C
- Static Pressure.. 150 lbf/in^2 g(10.5 kgf/cm^{2}g)

Finish ..... Optional
Material ..... Copper Alloy and Al_2O_3 Ceramic

OUTLINE DRAWING

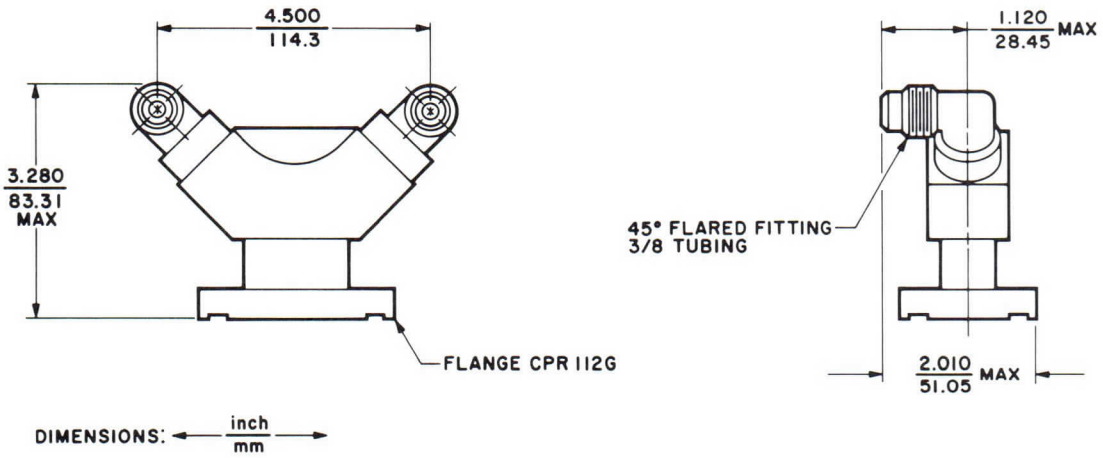

3591 1/77

Printed in U.S.A.

APPLICATION NOTE

COOLING

Operation of the load at maximum CW power requires a liquid cooling system capable of providing 2.0 gal/min(0.12 l/s) against a pressure drop of about 2 lbf/in^2 (0.14 kgf/cm^2) with a temperature rise of 20°C. The coolant must be water. Although this load requires water coolant, production design changes can be made to compensate for any combination of coolant mixtures and operating temperature ranges. Power, flow rate, and temperature rise are interdependent, but may be varied within specified limits. With appropriate inlet and outlet temperature measuring devices and depending upon the calorimeter used, r-f power can be accurately measured. R-f power can be calculated by the following formula:

$$P(kW) = .264 \times \text{Flow Rate (gal/min)} \times \text{Temperature Rise (°C)}$$

NOTES:

1. Characteristics are based on performance tests. These values may change without notice as a result of additional data or product refinement. Contact your local Varian Sales Office or the Palo Alto Microwave Tube Division, Microwave Components Operation before using this information for equipment design.
2. For special environmental requirements, contact your local Varian Sales Office or the Palo Alto Microwave Tube Division, Microwave Components Operation.
3. The waveguide flange meets the dimensional requirements of the latest issue of EIA Standard RS-271.

varian

HIGH POWER X-BAND WATER LOAD

DATA SHEET

L112DA1

7.1 - 10.2 GHz

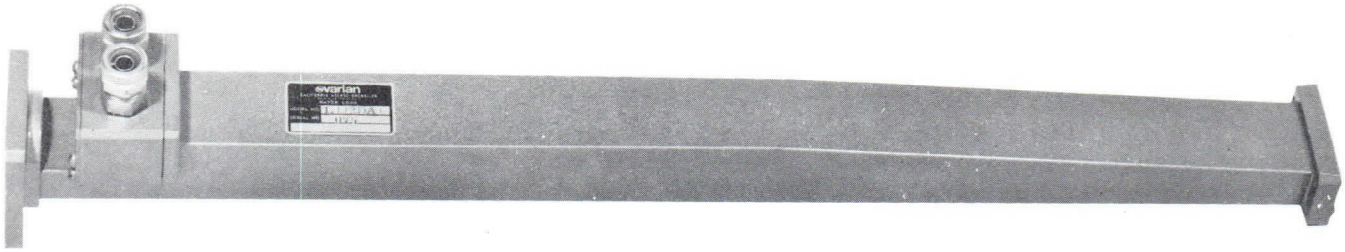

DESCRIPTION

The L112DA1 water load is a high-power dummy termination for RG-51/U waveguide. Accurate power measurements can be made with this load when used with the Varian V-4030 calorimeter[1]. The load dissipate average power up to a maximum of 5 kW in either CW or pulse systems over the frequency range from 7.1 to 10.2 GHz. To achieve rapid response, RF energy is absorbed directly in a small quantity of water contained in glass tubing within the load.

FEATURES

- High power dissipation.
- Low VSWR over a wide band.
- Rapid response to changes in RF power.
- Highly efficient energy conversion system.
- Complete RF shielding.
- Gas pressure sealed.
- Confined flow.

CHARACTERISTICS

ELECTRICAL

Frequency range	7.1 to 10.2 GHz
Average power, max	5 kW
Peak power, max	0.5 MW
VSWR, over frequency gange	1.15:1
Time lag, to reach stability after change in RF power	5 s

MECHANICAL

Dimensions	See outline drawing
Weight	2 lb
Water flow, typical for 5 kW dissipation	1 gpm
Water temperature rise, typical for 5 kW dissipation	19 °C
Water pressure drop, 1 gpm	5 lbf/in²
Inlet water pressure, max	75 lbf/in²
Outlet water temperature, max	75 °C
Waveguide gas pressure, max	50 lbf/in²
Mounting position	Any
RF connector	UG-51/U
Water connectors (2 ea)	Accept plastic tubing 3/8-inch OD x 1/16-in wall

SYSTEM REQUIREMENTS

A coolant system capable of providing a flow of 1 gpm at a pressure greater than 5 lbf/in² is required. When the water load is used as a dummy load, the coolant may be water, water-ethylene glycol mixture, water-alcohol mixture, etc. For use as a calorimeter, distilled water is recommended since the specific heats of the mixtures vary greatly with both concentration and temperature. Calorimetric techniques using coolants other than distilled water are outlined in the Operating Instructions.

Power is calculated by the following formula:

$$P = (0.264)(F)(T_2 - T_1)$$

where

- P = power in kW
- 0.264 = a constant including the specific heat of distilled water
- F = flow in gpm
- T_2 = temperature of outlet water in °C
- T_1 = temperature of inlet water in °C

NOTE

1. The V-4030 calorimeter consists of a water flow meter, flow adjusting valve, flow shut-off valve, and two thermometers mounted on a 19-inch rack panel or in a portable cabinet. The L112DA1 water load is also available with thermometers and a flow regulator mounted directly upon the load, at additional cost.

Pub. 1574 2/67

Printed in U. S. A.

L112DA1

CHARACTERISTIC CURVES

ALL CURVES ARE AVERAGE VALUES

PRESSURE DROP CHARACTERISTICS

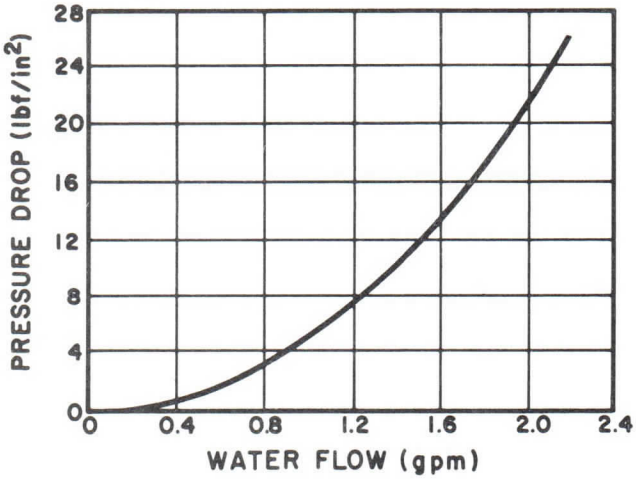

VSWR CHARACTERISTICS

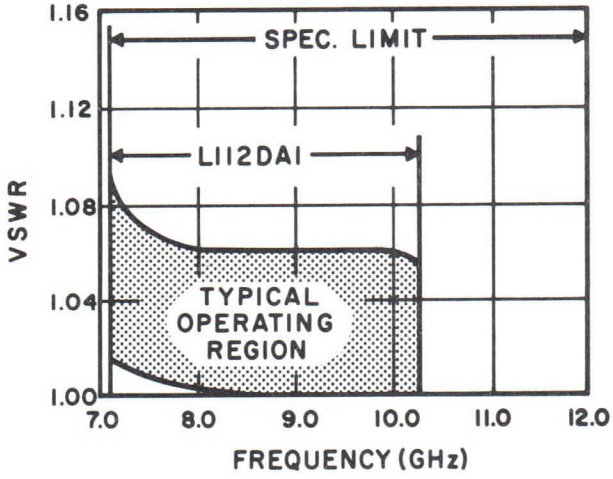

OUTLINE DRAWING

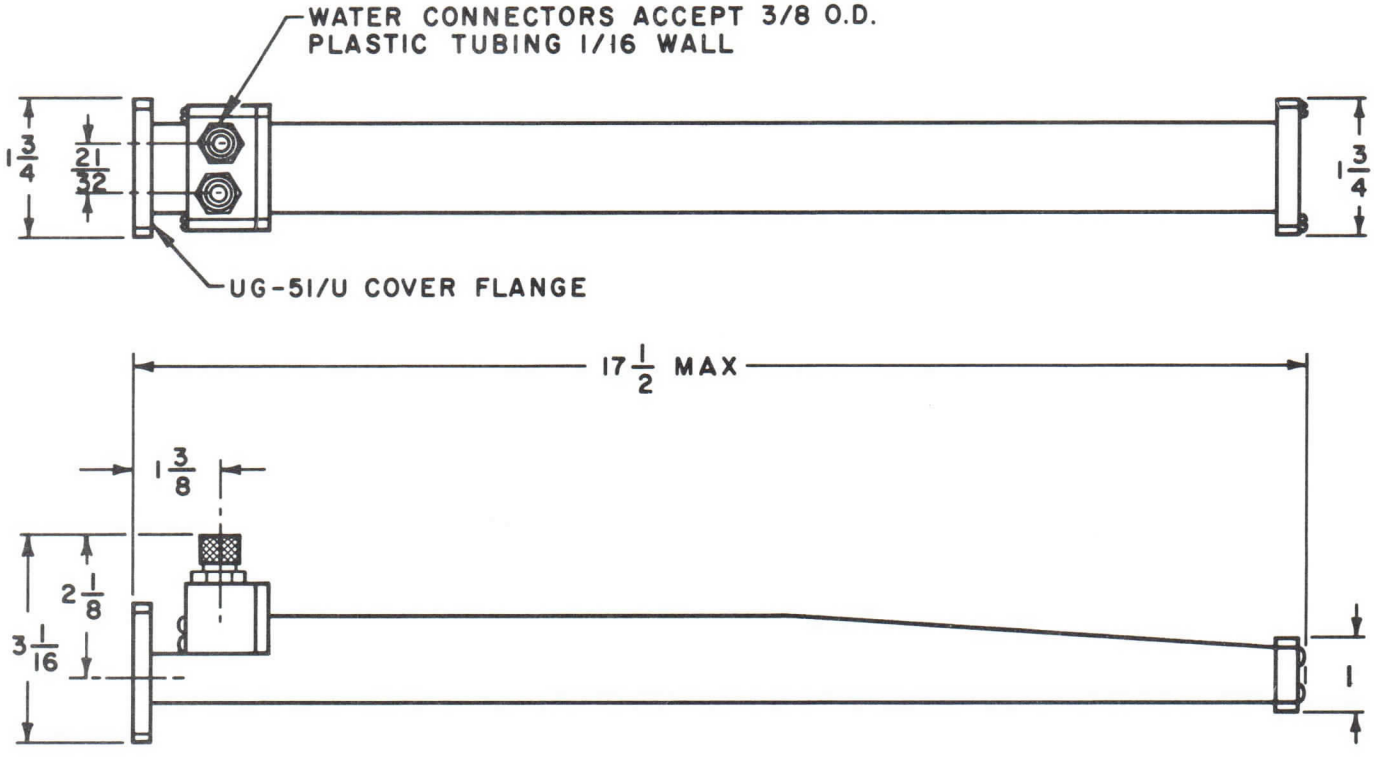

NOTE:
ALL DIMENSIONS ARE IN INCHES

varian
palo alto tube division

TECHNICAL DATA

L112FA1

HIGH POWER MICROWAVE LIQUID COOLED LOAD

7.9-8.4 GHz
15 kW

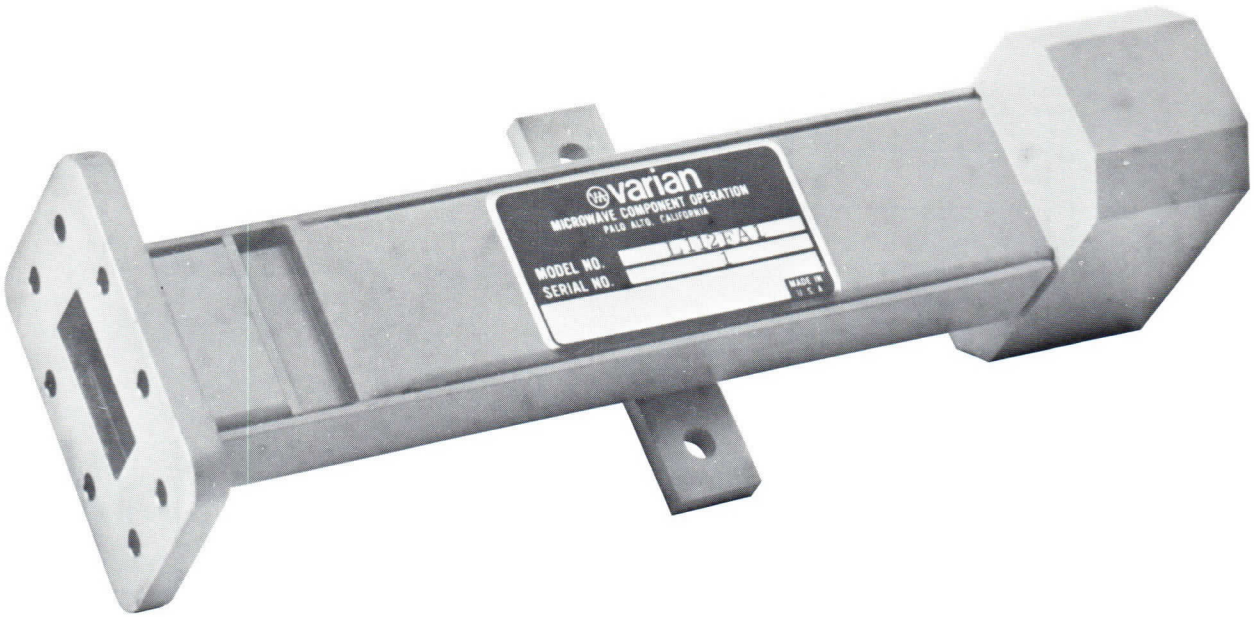

DESCRIPTION

The L112FA1 is a liquid-cooled, ceramic-block dummy termination for use in high-power CW airborne satellite-communication systems operating between 7.9 and 8.4 gigahertz. It can handle CW inputs up to 15 kilowatts. This load, designed for use with type WR112 waveguide, is of compact construction and built to withstand rugged airborne environments. It can also be used for ground-terminal applications, including areas where low ambient temperatures are encountered. Effective heat dissipation up to 50°C is achieved over an ambient temperature range of -30°C to +55°C using Coolanol®* 25 as the coolant.

GENERAL CHARACTERISTICS[1]

ELECTRICAL

Frequency Range	7.9 to 8.4 GHz
CW Power Handling Capacity, max	15 kW
VSWR, max	1.1:1

ENVIRONMENTAL

Ambient Temperature	-30 to +55 °C
Vibration	MIL-E-5400K, Class I, Curve I
Shock	MIL-E-5400K, Class I

NOTE:

1. Characteristic values are based on performance tests. These figures may change without notice as a result of additional data or product refinement. Contact the Varian Palo Alto Tube Division before using this information for equipment design.

PHYSICAL

Dimensions	See Outline Drawing
Weight, approximate	3 lb
Mounting Position	Any
Coolant	Coolanol 25, or equivalent
Inlet Temperature	60 to 80 °C
Flow, at 15 kW, min	3 gal/min
Pressure Drop, at 3 gal/min	3 lbf/in²
Temperature Rise, max	50 °C
Static Pressure	150 lbf/in²g
Standard Finish	Red Copon Epoxy
Material	OFHC Copper, Alumina Ceramic, and Brass

* ® Registered trademark of the Monsanto Chemical Co.

2500 10/70

Printed in U.S.A.

OUTLINE DRAWING

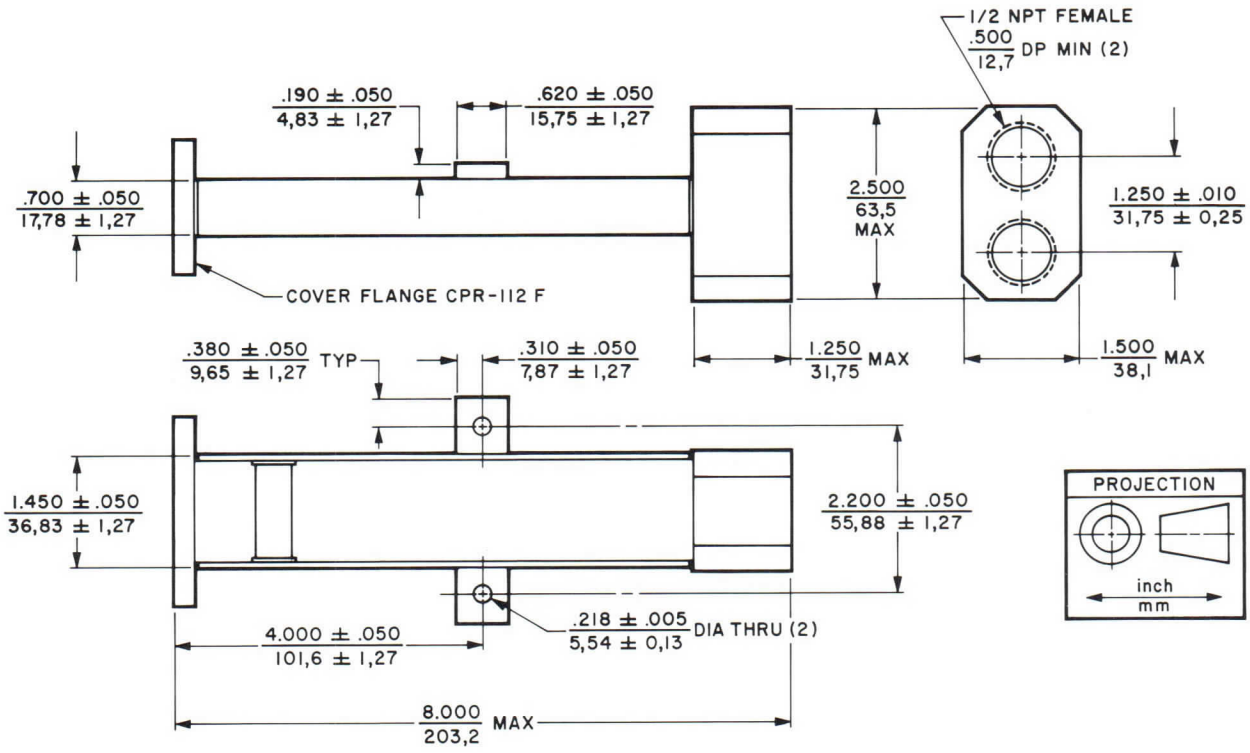

varian
electron tube and device group

TECHNICAL DATA

L137AA5

HIGH POWER MICROWAVE WATER LOAD

5.925-6.425 GHz

DESCRIPTION

The L137AA5 teflon-wedge water load is a dummy termination for WR137 waveguide. It is ideal for use as a dummy load and for making rapid calorimetric power measurements in high-power commercial CW satellite communication transmitters operating between 5.925 and 6.425 gigahertz. Modifications or load re-matching is not necessary with changes in the ethylene-glycol and water mixtures. This load dissipates up to 10 kilowatts of CW power. Very small and sturdy, the L137AA5 life expectancy is at least 20,000 hours.

GENERAL CHARACTERISTICS[1]

ELECTRICAL

Frequency Range ..... 5.925 to 6.425 GHz
Power Dissipation, CW, maximum .....10 kW
VSWR 1.1:1

PHYSICAL

Dimensions ..... See Outline Drawing
Weight, approximate ..... 5 lb
Mounting Position .....Vertical, flange down
Coolant ..... Water or Ethylene Glycol/Water
Outlet Temperature, maximum ..... 90 °C
Coolant Flow, minimum ..... 2 gal/min
Pressure Drop, at 2 gal/min..... 5 lbf/in^2
Hydrostatic Pressure, maximum .. 125 lbf/in^{2}g
Waveguide Pressure ..... 5 lbf/in^{2}g
Standard Finish
Exterior Surface.....Red Copon Epoxy

APPLICATION NOTE

COOLING

Operation of the load at maximum average power requires a liquid cooling system capable of providing at least 2 gal/min against a pressure drop of about 5 lbf/in^2 with a temperature rise of 20°C. The coolant can be any ethylene glycol/water mixture. Average power, flow rate, and temperature rise are interdependent, but may be varied within the specified limits. With appropriate inlet and outlet temperature measuring devices and with the Varian V-4030-14A or B Calorimeter or equivalent, r-f power can be accurately measured. R-f power can also be calculated by the following formula:

$$P = 0.221\ (F)\ (T_2 - T_1)$$

where,

P = average power in kilowatts
0.221 = a constant including the specific heat of 60/40 ethylene glycol/water mixture at an inlet temperature of 60°C. (Constant k for other mixtures can be determined from the "Characteristic Curves.")
F = flow in gallons per minute
T_2 = temperature of outlet liquid in °C.
T_1 = temperature of inlet liquid in °C.

CHARACTERISTIC CURVES

Typical performance values

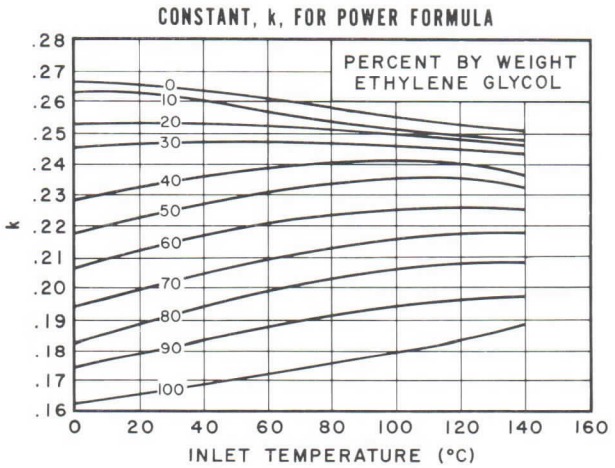

2041 12/68

Printed in U.S.A.

OUTLINE DRAWING [2]

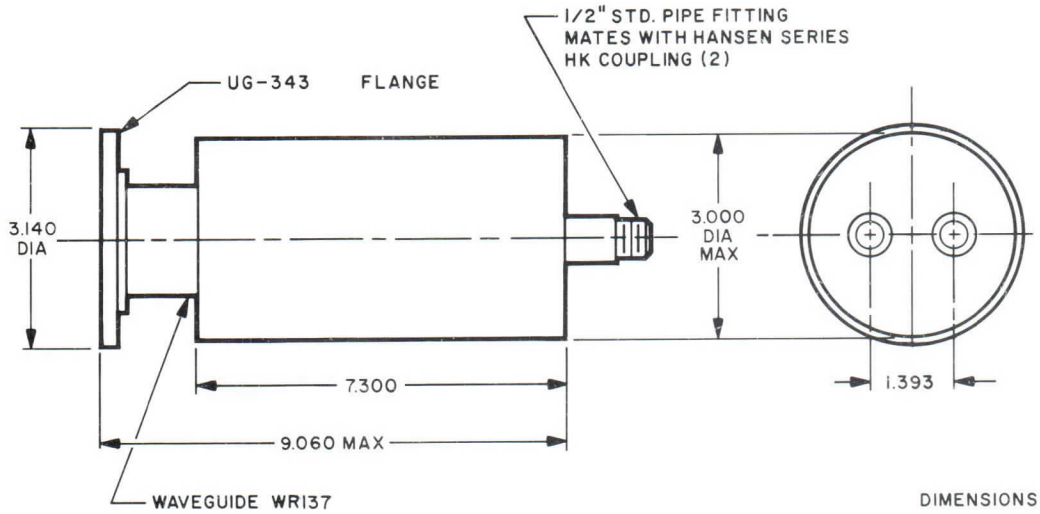

DIMENSIONS ARE IN INCHES

NOTES:

1. Characteristics are based on performance tests. These values may change without notice as a result of additional data or product refinement. Contact your local Varian Sales Office or the Palo Alto Tube Division before using this information for equipment design.
2. The waveguide flange meets the dimensional requirements of the latest issue of MIL-F-3922.

varian
electron tube and device group

TECHNICAL DATA

L137BB5

HIGH POWER MICROWAVE WATER LOAD

5.925-6.425 GHz
12 kW

DESCRIPTION

The L137BB5 ceramic-block water load is a dummy termination for WR137 waveguide. It is ideal for use as a dummy load and for making rapid calorimetric power measurements in high-power commercial CW satellite-communication transmitters operating between 5.925 and 6.425 gigahertz. This load dissipates up to 12 kilowatts of CW power, higher power can be handled with minor design modifications. Very small and sturdy, the L137BB5 consists of a waveguide flange, a ceramic-block window, and a small metal tank. Life expectancy is at least 20,000 hours.

GENERAL CHARACTERISTICS[1]

ELECTRICAL

Frequency Range	5.9 to 6.5 GHz
Power Dissipation, CW, maximum	12 kW
VSWR, 55-65 °C, maximum	1.10:1

ENVIRONMENTAL[2]

Operating	
Duty	Continuous
Ambient Temperature	-28 to +65 °C
Relative Humidity, including water and frost condensation	95%
Non-Operating	
Temperature	-62 to +75 °C
Altitude	No limit
Shock, 50 G, 11 ± 1 ms	Per MIL-STD-202, Method 202
Vibration, normal mounting	Per MIL-STD-202, Method 201

PHYSICAL

Dimensions	See Outline Drawing
Weight, approximate	2.1 lb
Mounting Position	Any
Coolant, by weight	15 ± 5% ethylene glycol/85 ± 5% water
Input Temperature Range	55 to 65 °C
Flow, minimum, for 12 kW	2.3 gal/min
Pressure Drop, at 2.3 gal/min	4.0 lbf/in^2
Temperature Rise, maximum	20 °C
Outlet Temperature, typical	80 °C
Static Pressure	125 lbf/in^2g
Standard Finish	
Exterior Surface	Red Copon Epoxy
Material	OFHC Copper, Al_2O_3 Ceramic, and Brass

OUTLINE DRAWING[3]

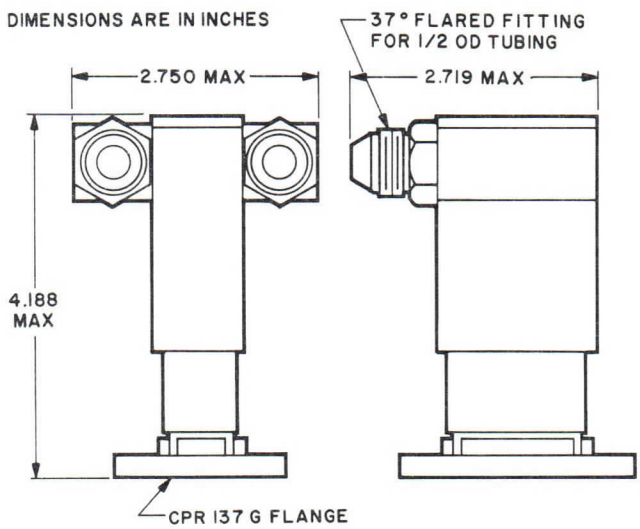

NOTES:

1. Characteristics are based on performance tests. These values may change without notice as a result of additional data or product refinement. Contact your local Varian Sales Office or the Palo Alto Tube Division before using this information for equipment design.
2. For special environmental requirements, contact your local Varian Sales Office or the Palo Alto Tube Division.
3. The waveguide flange meets the dimensional requirements of the latest issue of MIL-E-3922.

2267 1/70

Printed in U.S.A.

palo alto tube division/611 hansen way/palo alto/california 94303

APPLICATION NOTES

VSWR

The basic design of this type of water load in waveguide sizes of WR770 and smaller, produces a maximum VSWR of 1.15:1 over about 15 percent bandwidth with an inlet coolant temperature range of 49 - 60 °C. Lower values of VSWR can be provided for narrowband units. Typical VSWR variations for this load are shown in the accompanying graph.

COOLING

Operation of the load at maximum CW power requires a liquid cooling system capable of providing 3 gal/min flow against a pressure drop of about 2 lbf/in^2 with a temperature rise of 20°C. The coolant must be an ethylene glycol/water mixture (15/85 by weight, within 5%.) Although this load requires the ethylene glycol/water coolant, production design changes can be made to compensate for any combination of coolant mixtures and operating temperature ranges. Power, flow rate, and temperature rise are interdependent, but may be varied within specified limits. With appropriate inlet and outlet temperature measuring devices and depending upon the calorimeter used, r-f power can be accurately measured. R-F power can be calculated using the following formula:

P (kW) = k x Flow Rate (gal/min) x Temp. Rise (°C)

For a 15/85 ethylene glycol/water mixture, constant k is 0.254 at an inlet temperature of 60°C. Constant k values for various mixtures at inlet temperatures from 0 to 140°C can be determined from the "Characteristic Curves."

CHARACTERISTIC CURVES

Typical performance values

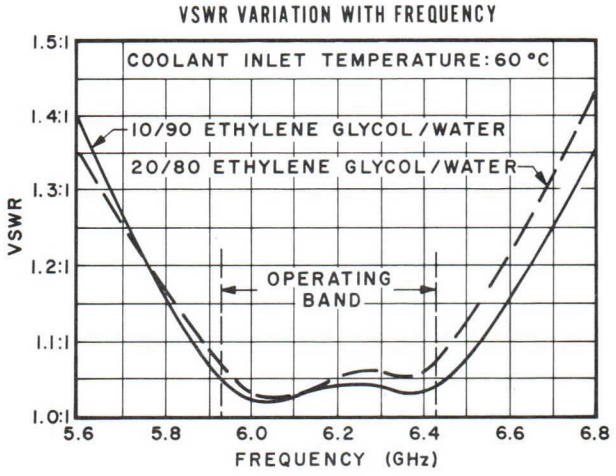

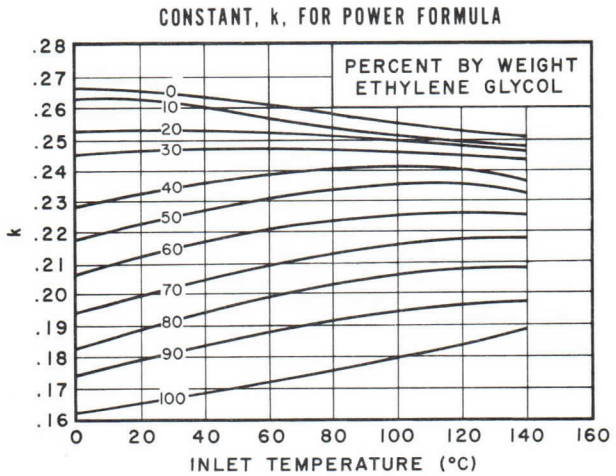

varian
electron tube and device group

TECHNICAL DATA

L137BB9

HIGH POWER MICROWAVE WATER LOAD

5.9-6.5 GHz

DESCRIPTION

The L137BB9 ceramic-block water load is a dummy termination for WR137 waveguide. It is ideal for use as a dummy load and for making rapid calorimetric power measurements in high-power commercial CW satellite-communication transmitters operating between 5.925 and 6.425 gigahertz. It dissipates up to 20 kilowatts of CW power; higher power can be handled with minor design modifications. Very small and sturdy, the L137BB9 consists of a waveguide flange, a ceramic-block window, and a small metal tank. Life expectancy is at least 20,000 hours.

GENERAL CHARACTERISTICS [1]

ELECTRICAL

Frequency Range ..... 5.9 to 6.5 GHz
Power Dissipation, CW, maximum .... 20 kW
VSWR, 20-30°C, maximum 1.10:1

ENVIRONMENTAL

Operating
- Duty ..... Continuous
- Ambient Temperature ..... -28 to +65 °C
- Relative Humidity, including water and frost condensation 95%

Non-Operating
- Temperature ..... -62 to +75 °C
- Altitude ..... No limit
- Shock, 50 G, 11 ± 1 ms .. Per MIL-STD-202, Method 202
- Vibration, normal mounting ..... Per MIL-STD-202, Method 201

PHYSICAL

Dimensions ..... See Outline Drawing
Weight, approximate ..... 2.1 lb
Mounting Position ..... Any
Coolant, ... Water
- Flow, minimum, for 20 kW ..... 3.8 gal/min
- Pressure Drop, at 3.8 gal/min .. 4.0 lbf/in^2
- Temperature Rise, maximum ..... 20 °C
- Outlet Temperature, typical ..... 50 °C
- Static Pressure ..... 125 lbf/in^2g

Standard Finish
- Exterior Surface ..... Red Copon Epoxy

Material ..... OFHC Copper, Al_2O_3 Ceramic, and Brass

NOTES:

1. Characteristics and curves are based on performance tests. These values may change without notice as a result of additional data or product refinement. Contact your local Varian Sales Office or the Microwave Components Operation of the Palo Alto Tube Division before using this information for equipment design.
2. The waveguide flange meets the dimensional requirements of the latest issue of MIL-F-3922.

2083 2/69

Printed in U.S.A.

palo alto tube division/611 hansen way/palo alto/california 94303

APPLICATION NOTES

Operation of the load at maximum CW power requires a water-cooling system capable of providing 3.8 gal/min against a pressure drop of about 4 lbf/in^2 with a temperature rise of 20°C. Although this load requires water as a coolant, production design changes can be made to compensate for any combination of coolant mixtures and operating temperature ranges. Power, flow rate, and temperature rise are interdependent, but may be varied within specified limits. With appropriate inlet and outlet temperature measuring devices and depending upon the calorimeter used, r-f power can be accurately determined. R-f power can be calculated by the following formula:

P (kW) = k x Flow Rate (gal/min) x Temp. Rise (°C)

For water, constant k is 0.265 at an inlet temperature of 30°C. Constant k value at inlet temperatures from 0 to 140°C can be determined from the "Characteristic Curves."

CHARACTERISTIC CURVES

Typical performance values

VSWR VARIATION WITH FREQUENCY

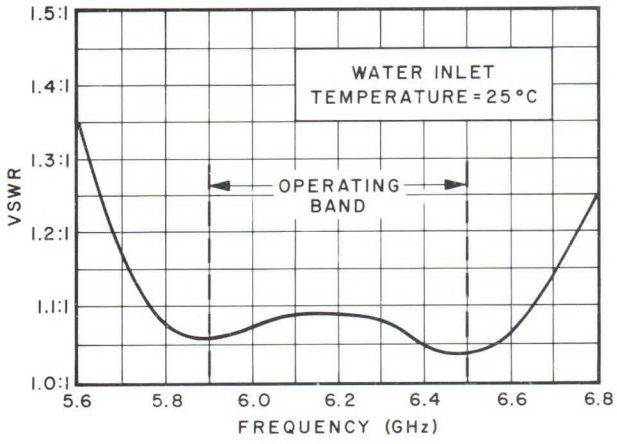

CONSTANT, K, FOR POWER FORMULA

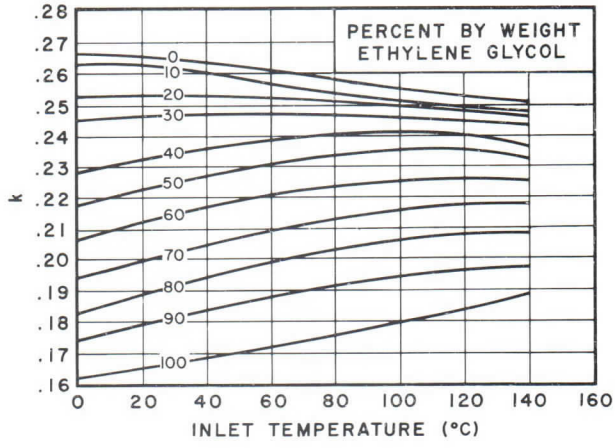

OUTLINE DRAWING [2]

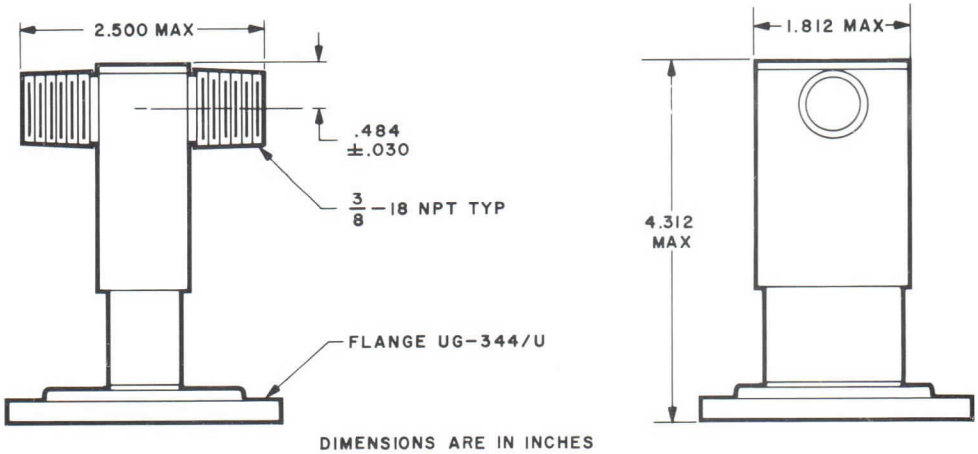

DIMENSIONS ARE IN INCHES

varian
electron tube and device group

TECHNICAL DATA

L137BC2

HIGH POWER MICROWAVE WATER LOAD

7.9-8.4 GHz

DESCRIPTION

The L137BC2 ceramic-block water load is a dummy termination for WR137 waveguide. It is ideal for use as a dummy load and for making rapid calorimetric power measurements in high-power military satellite communication transmitters operating between 7.9 and 8.4 gigahertz. This load dissipates up to 20 kilowatts of CW power. Higher power can be handled with minor design modifications. Very small and sturdy, the L137BC2 consists of a waveguide flange, a ceramic-block window, and a small metal tank. Life expectancy is at least 20,000 hours.

GENERAL CHARACTERISTICS[1]

ELECTRICAL

Frequency Range	7.9 to 8.4 GHz
Power Dissipation, CW, max	20 kW
VSWR, max	1.15:1

ENVIRONMENTAL[2]

Operating	
Duty	Continuous
Ambient Temperature	-28 to +65 °C
Relative Humidity, including water and frost condensation	95%
Non-Operating	
Temperature	-62 to +75 °C
Altitude	No Limit
Shock, 50 G, 11±1 ms	Per MIL-STD-202, Method 202
Vibration	
normal mounting	Per MIL-STD-202, Method 201

PHYSICAL

Dimensions	See Outline Drawing
Weight, approx	1.5 lb
Mounting Position	Any
Coolant, by weight	60 ± 3% ethylene glycol/40 ± 3% water
Inlet Temperature	49-60 °C
Flow, minimum, for 20 kW	3.8 gal/min
Pressure Drop, at 3.8 gal/min	2 lbf/in^2
Temperature Rise, max	20 °C
Outlet Temperature, typ	80 °C
Hydrostatic Pressure	125 lbf/in^{2}g
Standard Finish	
Exterior Surface	Red Copon Epoxy
Material	OFHC Copper, Al_2O_3 Ceramic, and Brass

NOTES:

1. Characteristics are based on performance tests. These values may change without notice as a result of additional data or product refinement. Contact your local Varian Sales Office or the Palo Alto Tube Division before using this information for equipment design.
2. For special environmental requirements, contact your local Varian Sales Office or the Palo Alto Tube Division.
3. The waveguide flange meets the dimensional requirements of the latest issue of MIL-E-3922.

2039 1/69

Printed in U.S.A.

palo alto tube division/611 hansen way/palo alto/california 94303

APPLICATION NOTE
COOLING

Operation of the load at maximum CW power requires a liquid cooling system capable of providing 3.8 gal/min against a pressure drop of about 2 lbf/in^2 with a temperature rise of 20°C. The coolant must be an ethylene glycol/water mixture (60/40 by weight, within 3%.) Although this load requires the ethylene glycol/water coolant, production design changes can be made to compensate for any combination of coolant mixtures and operating temperature ranges. Power, flow rate, and temperature rise are interdependent, but may be varied within specified limits. With appropriate inlet and outlet temperature measuring devices and depending upon the calorimeter used, r-f power can be accurately measured. R-f power can be calculated by the following formula:

P (kW) = k x Flow Rate (gal/min) x Temp. Rise (°C)

For a 60/40 ethylene glycol/water mixture, constant k is 0.221 at an inlet temperature of 60°C. Constant k values for various mixtures at inlet temperatures from 0 to 140°C can be determined from the "Characteristic Curves."

CHARACTERISTICS CURVES
Typical performance values

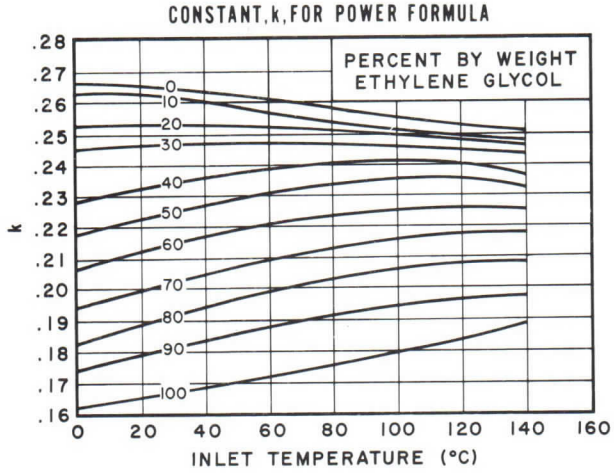

OUTLINE DRAWING[3]

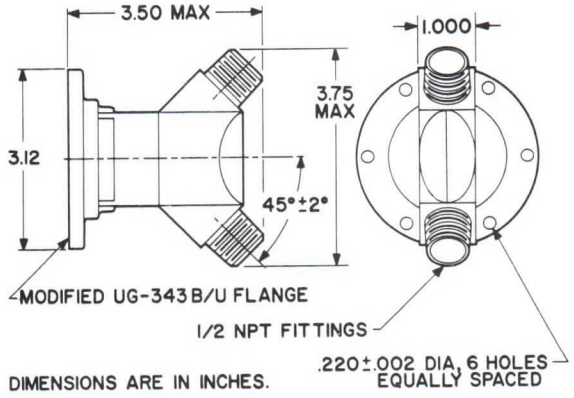

varian
electron tube and device group

TECHNICAL DATA

L159AA2

HIGH POWER MICROWAVE WATER LOAD

5.925-6.425 GHz

DESCRIPTION

The L159AA2 teflon-wedge water load is a dummy termination for WR159 waveguide. It is ideal for use as a dummy load and for making rapid calorimetric power measurements in high-power commercial CW satellite communication transmitters operating between 5.925 and 6.425 gigahertz. Modifications or load re-matching is not necessary with changes in the ethylene-glycol and water mixtures. This load dissipates up to 12 kilowatts of CW power. Very small and sturdy, the L159AA2 life expectancy is at least 20,000 hours.

GENERAL CHARACTERISTICS [1]

ELECTRICAL

Frequency Range ..... 5.925 to 6.425 GHz
Power Dissipation, CW, maximum .... 12 kW
VSWR 1.1:1

PHYSICAL

Dimensions ..... See Outline Drawing
Weight, approx ..... 5 lb
Mounting Position .....Vertical, flange down
Coolant .....Water or Ethylene Glycol/Water
Outlet Temperature, maximum .....90°C
Coolant Flow, minimum .....2.4 gal/min
Pressure Drop, at 2.4 gal/min..... 5 lbf/in^2
Hydrostatic Pressure, maximum .. 125 lbf/in^{2}g
Waveguide Pressure ..... 5 lbf/in^{2}g
Standard Finishes
Waveguide and Flange ..... Copper Alloy
Exterior Surface.....Red Copon Epoxy
Material .....Brass

APPLICATION NOTE

COOLING

Operation of the load at maximum average power requires a liquid cooling system capable of providing at least 2.4 gal/min against a pressure drop of about 5 lbf/in^2 with a temperature rise of 20°C. The coolant can be any ethylene glycol/water mixture. Average power, flow rate, and temperature rise are interdependent but may be varied within the specified limits. With appropriate inlet and outlet temperature measuring devices and with the Varian V-4030-30B Calorimeter or equivalent, r-f power can be accurately measured. R-f power can also be calculated by the following formula:

$$P = 0.221\ (F)\ (T_2 - T_1)$$

where,

P = average power in kilowatts
0.221 = a constant including the specific heat of 60/40 ethylene glycol/water mixture at an inlet temperature of 60°C. (Constant k for other mixtures can be determined from the "Characteristic Curves.")
F = flow in gallons per minute
T_2 = temperature of outlet liquid in °C.
T_1 = temperature of inlet liquid in °C.

CHARACTERISTIC CURVES

Typical performance values

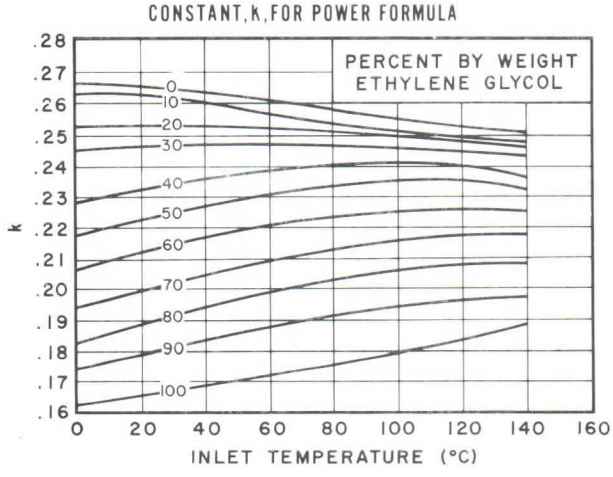

2040 12/68

Printed in U.S.A.

OUTLINE DRAWING[2]

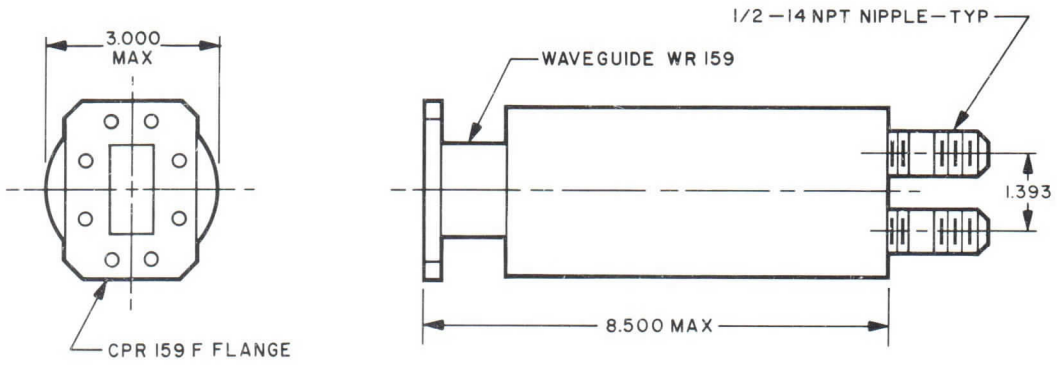

DIMENSIONS ARE IN INCHES

NOTES:

1. Characteristics are based on performance tests. These values may change without notice as a result of additional data or product refinement. Contact your local Varian Sales Office or the Palo Alto Tube Division before using this information for equipment design.
2. The waveguide flange meets the dimensional requirements of the latest issue of EIA Standard RS-271.

varian

MEGA-POWER MICROWAVE WATER LOAD

DATA SHEET

L284AA7

2.6-4.0 GHz

DESCRIPTION

The L284AA7 is a high-power broadband compact water load (teflon wedge type) which is used as a dummy termination for WR284 waveguide. When used with appropriate input and output temperature measurement devices and flow meters, R-F power can be measured within a few percent at rated average power without error compensation. Peak power of 14 megawatts can be dissipated with dry air in the waveguide at a gauge pressure of 30 pound-force per square inch. By using sulphur hexafluoride, SF_6, in the waveguide, much higher power can be handled. This load dissipates up to 25 kilowatts of average power. Even higher power can be handled with design modifications.

The special window used in this load makes possible both high waveguide pressurization and high static pressure in the coolant tank. The unique dielectric window design permits retention of low VSWR and the efficient transfer of R-F energy to the coolant independent of the coolant's dielectric constant and temperature. Since the coolant inlet temperature may vary widely without affecting performance of the load, special heat exchangers are not required.

Features of this type of water load are high power capability, low VSWR, calorimetric operation, inherent reliability, high pressure capability, small size, very rugged, and full waveguide bandwidth operation.

GENERAL CHARACTERISTICS**

ELECTRICAL

Frequency Range	2.6 to 4.0 GHz
Peak Dissipation, maximum	
Dry air, at sea level	2 MW
Dry air, at 30 lbf/in^2g	14 MW
Average Dissipation, maximum	25 kW
VSWR, 0 - 80°C, typical	1.15:1

ENVIRONMENTAL*

Operating	
Duty	Continuous
Ambient Temperature	Only limited by coolant
Relative Humidity, including water and frost condensation	100 %

Non-Operating	
Altitude	No limit
Shock, 50G, 11 ±1 ms	Per Method 202, MIL-STD-202
Vibration, normal mounting	Per Method 201, MIL-STD-202

PHYSICAL

Dimensions	See Outline Drawing
Weight, approx	28 lb
Mounting Position	Any
Coolant	Ethylene glycol or water
Flow, for 25 kW	5 gal/min
Pressure Drop, gal/min	< 5 lbf/in^2g
Temperature Rise	19 °C
Outlet Temperature, typ	80 °C
Static Pressure	125 lbf/in^2g
Paint	Standard Varian color unless specified otherwise by customer
Material	Brass, unless aluminum is specified by customer

*For special environmental requirements, contact your local Varian Sales Office or the Palo Alto Tube Division.

**This water load can be modified to meet other specifications.

Pub. 1729 4/67

Printed in U.S.A.

L284AA7

APPLICATION NOTES

PEAK POWER

The peak power dissipation capability of the L284AA7 depends on the dielectric and gas pressure in the waveguide. The peak power which can be handled using dry air, dry nitrogen, or sulphur hexafluoride to pressurize the waveguide is shown in the graph at the right. Peak power is related to the dissipation rating for dry air at atmospheric pressure and sea level as unity.

VSWR

The basic design of this type of water load, in waveguide sizes of WR770 and smaller, produces a maximum VSWR of 1.15:1 over 100 percent bandwidth at inlet coolant temperatures from 0°C to 80°C. Lower values of VSWR can be provided for narrow-band units. Typical VSWR variations for this load are shown in the accompanying graph.

COOLING

Operation of the load at maximum average power requires a liquid cooling system capable of providing 5 gal/min. The coolant can be ethylene glycol/water or pure water. Average power, flow rate, and temperature rise are interdependent, but may be varied within the specified limits. With appropriate inlet and outlet temperature measuring devices, RF power can be measured accurately without error compensation within the accuracy of the calorimeter. Power can be calculated by the following formula:

$$P = 0.264\ (F)\ (T_2 - T_1)$$

where,

P = average power in kilowatts

0.264 = a constant for pure water. (For other mixtures see the accompanying graph.)

F = flow in gallons per minute

T_2 = temperature of outlet liquid in °C

T_1 = temperature of inlet liquid in °C

OUTLINE DRAWING

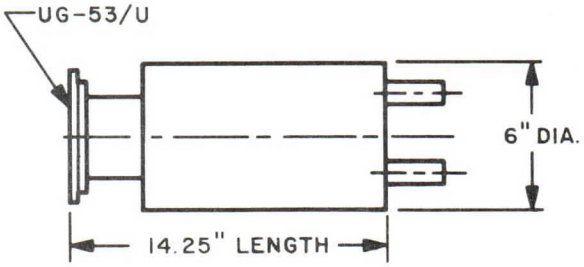

CHARACTERISTIC CURVES

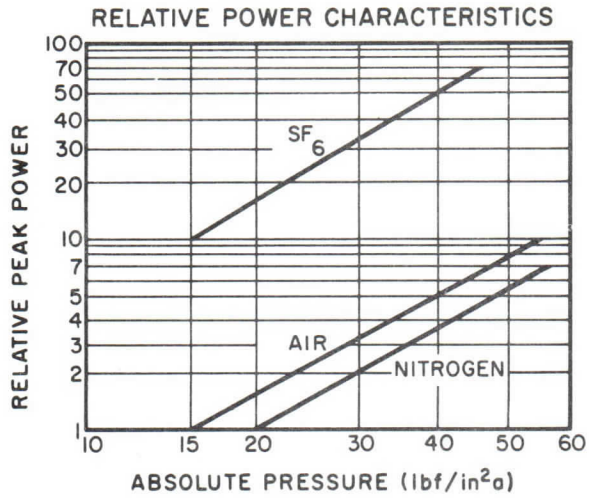

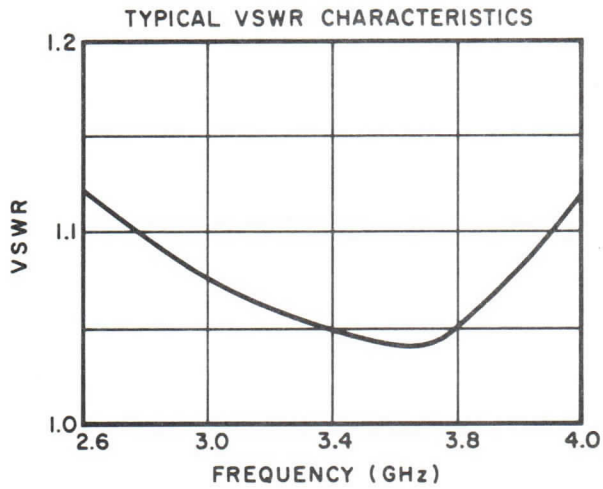

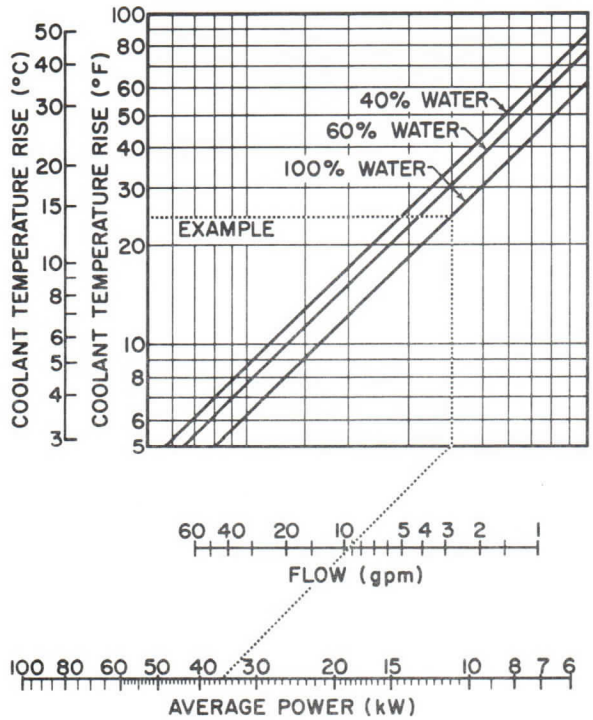

NOMOGRAM OF RELATIONSHIPS BETWEEN COOLANT TEMPERATURE RISE, FLOW RATE, AND AVERAGE POWER

varian

SUPER POWER MICROWAVE WATER LOADS

L284BA3

DATA SHEET

DESCRIPTION

The L284BA3 superpower miniature water load (ceramic block type) is a dummy termination for WR284 waveguide. It is ideal for use as a dummy load and for making rapid calorimetric power measurements in high- and super-power microwave transmitters operating between 3.0 and 3.5 gigahertz. Bandwidth is approximately 15 percent. Peak power of 7.0 megawatts can be dissipated with dry air in the waveguide at a gauge pressure of 14.7 pound-force per square inch. By using sulphur hexafluoride, SF_6, in the waveguide at the same pressure, the load can handle power up to 60 megawatts. This load dissipates up to 200 kilowatts of average power. Very small and sturdy, the L284BA3 consists only of a waveguide flange, a ceramic-block window, and a small metal tank. Life expectancy is at least 50,000 hours.

GENERAL CHARACTERISTICS[1]

ELECTRICAL

Frequency Range	3.0 to 3.5 GHz
Peak Dissipation, maximum	
Dry air, at sea level	2.0 MW
Dry air, at 30 lbf/in^2g	13.0 MW
Average Dissipation, maximum	200 kW
VSWR, 30-80°C, input water, typical	1.15:1

ENVIRONMENTAL[2]

Operating	
Power	1 MW pulsed
Ambient Temperature	-15 to +27°C
	Per Method 103B, Test B, MIL-STD-202
Relative Humidity	80% at 26.7°C
Altitude	6000 feet (23.5 inches of mercury)
Non-Operating	
Temperature	-54 to +71°C
Altitude	40,000 feet
Shock, 50 G, 11 ± 1 ms	Per Method 205, MIL-STD-202
Vibration, normal mounting	Per Method 514.1 Para. 5.6, MIL-STD-810

PHYSICAL

Dimensions	See Outline Drawing
Weight, approx	8 lb
Mounting Position	Any
Coolant	Water[3]
Flow, for 200 kW, min	40 gal/min
Pressure Drop, 10 gal/min	2 lbf/in^2g
Temperature Rise, max	20°C
Outlet Temperature, typ	80°C
Static Pressure	200 lbf/in^2g
Finish	Standard Varian Color unless specified otherwise by customer
Material	OFHC copper, Al_2O_3 ceramic, and brass

1. This load can be modified to meet other specifications.
2. For special environmental requirements, contact your local Varian Sales Office or the Palo Alto Tube Division.
3. Can be designed for other coolant mixes.

Pub. 1730 4/67

Printed in U.S.A.

APPLICATION NOTES

PEAK POWER

The peak power dissipation capability of the L284BA3 depends on the dielectric and gas pressure in the waveguide. The peak power which can be handled using dry air, dry nitrogen, or sulphur hexafluoride to pressurize the waveguide is shown in the graph at the right. Peak power is related to the dissipation rating for dry air at atmospheric pressure and sea level as unity.

VSWR

The basic design of this type of water load, in waveguide sizes of WR770 and smaller, produces a maximum VSWR of 1.15:1 over about 15 percent bandwidth at inlet coolant temperatures from 30°C to 80°C. Lower values of VSWR can be provided for narrowband units. Typical VSWR variations for this load are shown in the accompanying graph.

COOLING

Operation of the load at maximum average power requires a liquid cooling system capable of providing 40 gal/min at a pressure of at least 15 lbf/in^2 with a temperature rise of 20°C. The coolant must be water, production design changes can be made to compensate for any combination of coolant mixtures (such as ethylene glycol) and operating temperature ranges. Average power, flow rate, and temperature rise are interdependent, but may be varied within the specified limits. With appropriate inlet and outlet temperature measuring devices, RF power can be measured accurately without error compensation within the accuracy of the calorimeter. Power can be calculated by the following formula:

$$P = 0.262\ (F)\ (T_2 - T_1)$$

where,

P = average power in kilowatts

0.262 = a constant including the specific heat water at an inlet temperature of 60°C

F = flow in gallons per minute

T_2 = temperature of outlet liquid in °C

T_1 = temperature of inlet liquid in °C

CHARACTERISTIC CURVES

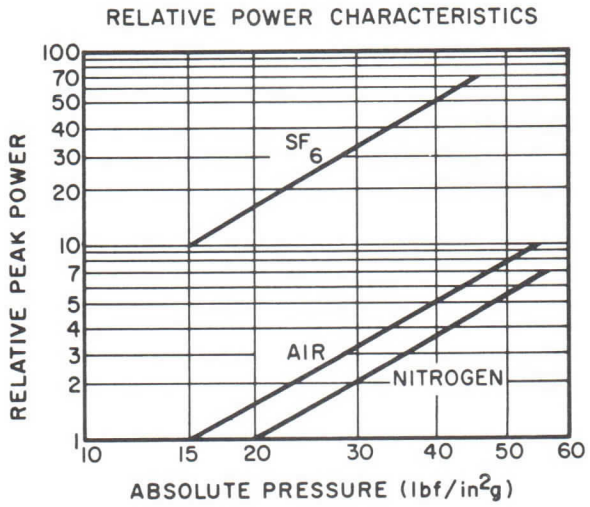

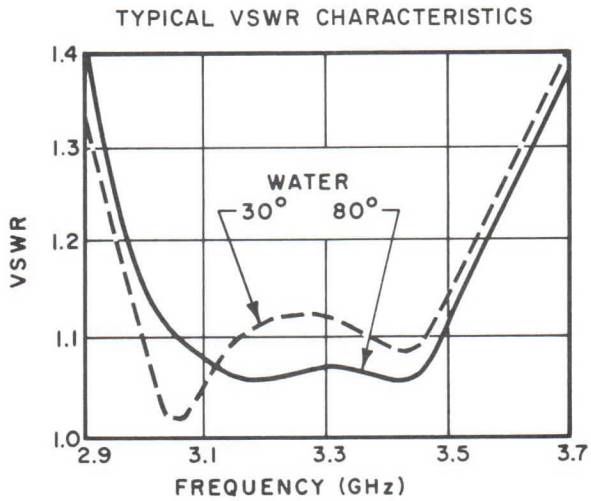

OUTLINE DRAWING

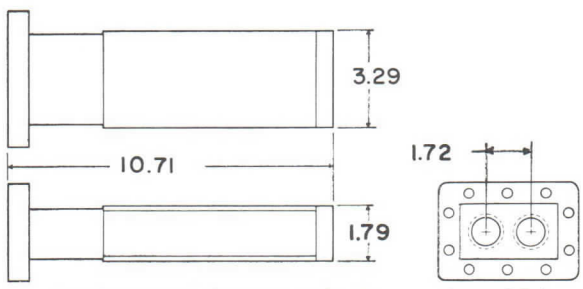

DIMENSIONS ARE IN INCHES AND ARE APPROXIMATE

CPR-284 FLANGE

varian
palo alto tube division

TECHNICAL DATA

V-4030A

CALORIMETER

DESCRIPTION

Varian V-4030-7A and V-4030-14A Calorimeters are devices for accurately measuring the average r-f power absorbed in high-power water loads. The 7A and 14A models are ideal for use with Varian water loads capable of dissipating up to 7.5 and 15 kilowatts of r-f power, respectively. Each calorimeter includes a water-flow meter, a flow-adjusting valve, a shut-off valve, and two thermometers assembled on a standard 19-inch panel for rack mounting. The calorimeters connect to the water supply and water load by means of flexible plastic tubing. For most accurate power measurements, the coolant lines between the calorimeter and the water load should be as short as possible.

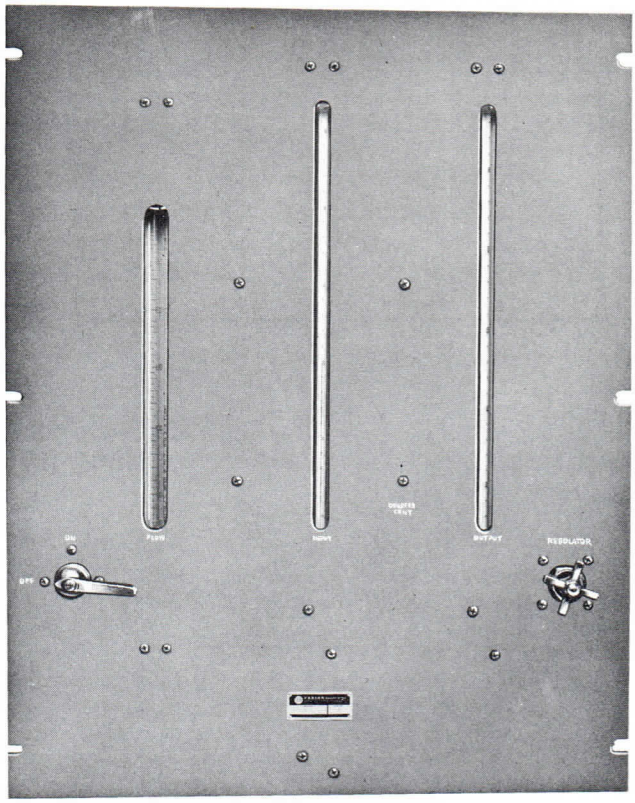

FEATURES

- Excellent accuracy.
- Ease of calibration.
- Simple operation.

GENERAL CHARACTERISTICS[1]

Measurable Power with a 50°C Temp. Rise, max
- Model 7A ..... 7 kW
- Model 14A ..... 14 kW

Accuracy:
- Thermometers ..... ±0.2 °C
- Flow Meter at 21°C Water Temp. .... ±2% of full scale

Thermometers
- Input Temperature Range ..... -1° to +51 °C
- Output Temperature Range ... +25° to 75 °C
- Scale Divisions ..... 0.1 °C

Water Flow, max[2]
- Model 7A ..... 0.57 gal/min (150 W/°C)
- Model 14A ..... 1.14 gal/min (300 W/°C)

Water Pressure, max ..... 80 lbf/in²g

Dimensions ..... See Outline Drawing

Weight ..... 10 lbs.

NOTES:

1. Characteristic values are based on performance tests. These figures may change without notice as a result of additional data on product refinement. Varian Associates should be consulted before using this information for power output measurements.

2. The flow meter scale is calibrated in watts per degree Celsius of temperature rise for distilled water. The product of the flow meter reading and the difference between the readings on the thermometer is the rf energy absorbed by the load.

2834 10/72

Printed in U.S.A.

CHARACTERISTIC CURVES

Typical performance values

V-4030A-7A FLOW CHARACTERISTICS

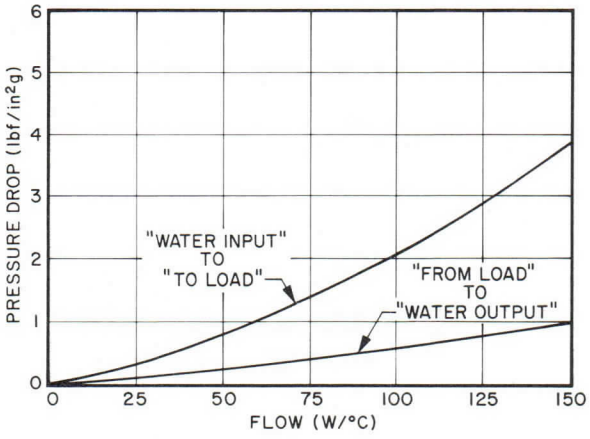

V-4030A-14A FLOW CHARACTERISTICS

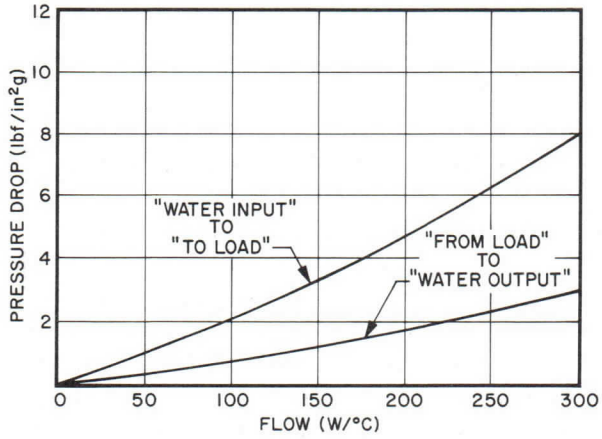

OUTLINE DRAWING

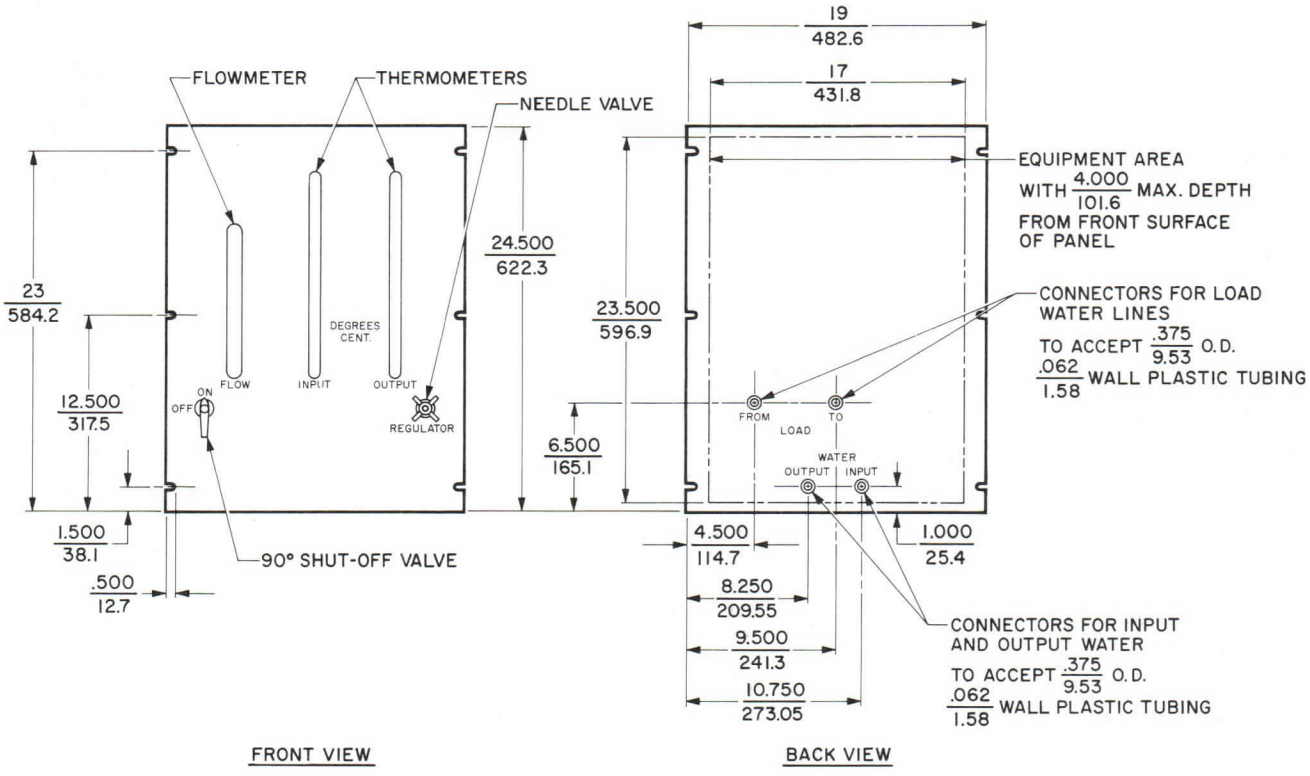

inch / mm

NOTES:

1. MAXIMUM PROTRUSION FROM FRONT SURFACE OF PANEL = 1.500 / 38.1
2. MOUNTING PER WESTERN ELECTRIC STANDARD (PANEL SIZE NO. 22)

varian
palo alto tube division

TECHNICAL DATA

V-4030B

CALORIMETER

DESCRIPTION

Varian V-4030-7B and V-4030-14B Calorimeters are devices for accurately measuring the average r-f power absorbed in high-power water loads. The 7B and 14B models are ideal for use with Varian water loads capable of dissipating up to 7.5 and 15 kilowatts of r-f power, respectively. Each calorimeter includes a water-flow meter, a flow-adjusting valve, and two thermometers mounted in a portable cabinet for bench use. The calorimeters connect to the water supply by means of flexible plastic tubing. For most accurate power measurements, the coolant lines between the calorimeter and the water load should be as short as possible.

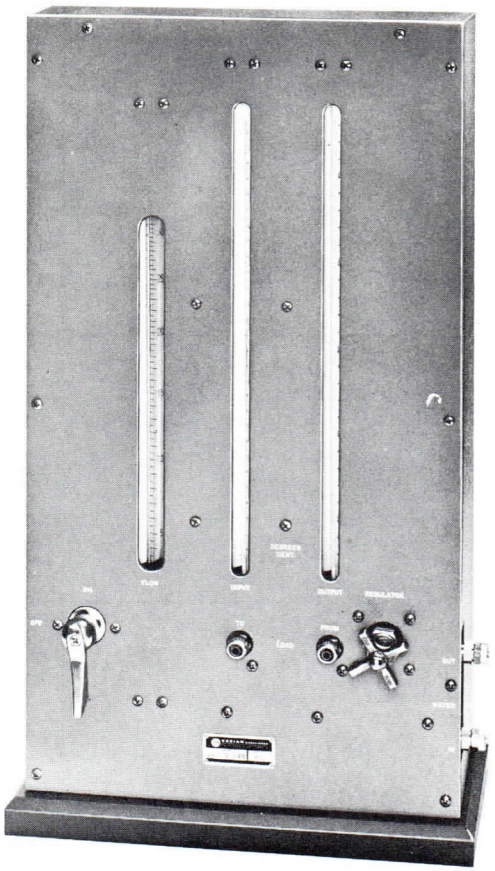

FEATURES

- Excellent accuracy.
- Ease of calibration.
- Simple operation.

GENERAL CHARACTERISTICS[1]

Measurable Power with a 50°C Temp. Rise, max.
- Model 7B ..... 7 kW
- Model 14B ..... 14 kW

Accuracy:
- Thermometers ..... ±0.2 °C
- Flow Meter
  - at 21°C Water Temp. .... ±2% of full scale

Thermometers
- Input Temperature Range .... -1° to +51 °C
- Output Temperature Range .. +25° to +75 °C
- Scale Division ..... 0.1 °C

Water Flow, max.[2]
- Model 7B ..... 0.57 gal/min (150 W/°C)
- Model 14B ..... 1.14 gal/min (300 W/°C)

Water Pressure, max. ..... 80 lbf/in^{2}g

Dimensions ..... See Outline Drawing

Weight ..... 39 lbs.

NOTES:

1. Characteristic values are based on performance tests. These figures may change without notice as a result of additional data or product refinement. Varian Associates should be consulted before using this information for power output measurements.

2. The flow meter scale is calibrated in watts per degree Celsius of temperature rise for distilled water. The product of the flow meter reading and the difference between the readings on the thermometer is the rf energy absorbed by the load.

2832 10/72

Printed in U.S.A.

CHARACTERISTIC CURVES

Typical performance values

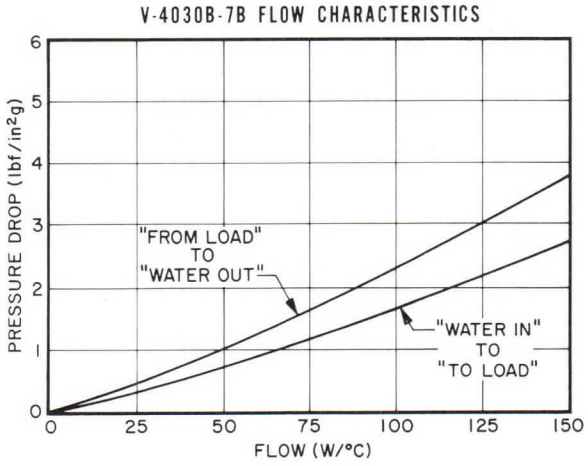

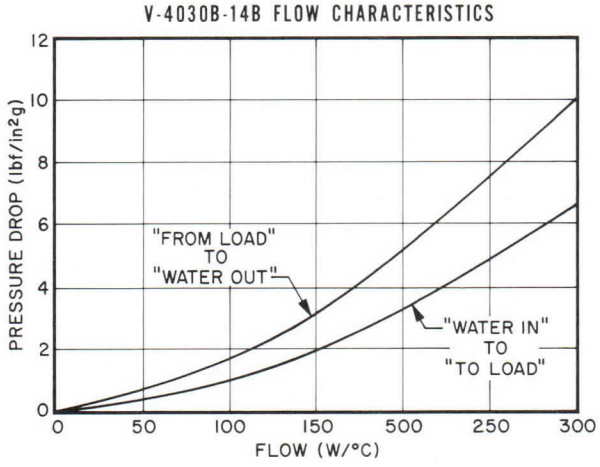

OUTLINE DRAWING

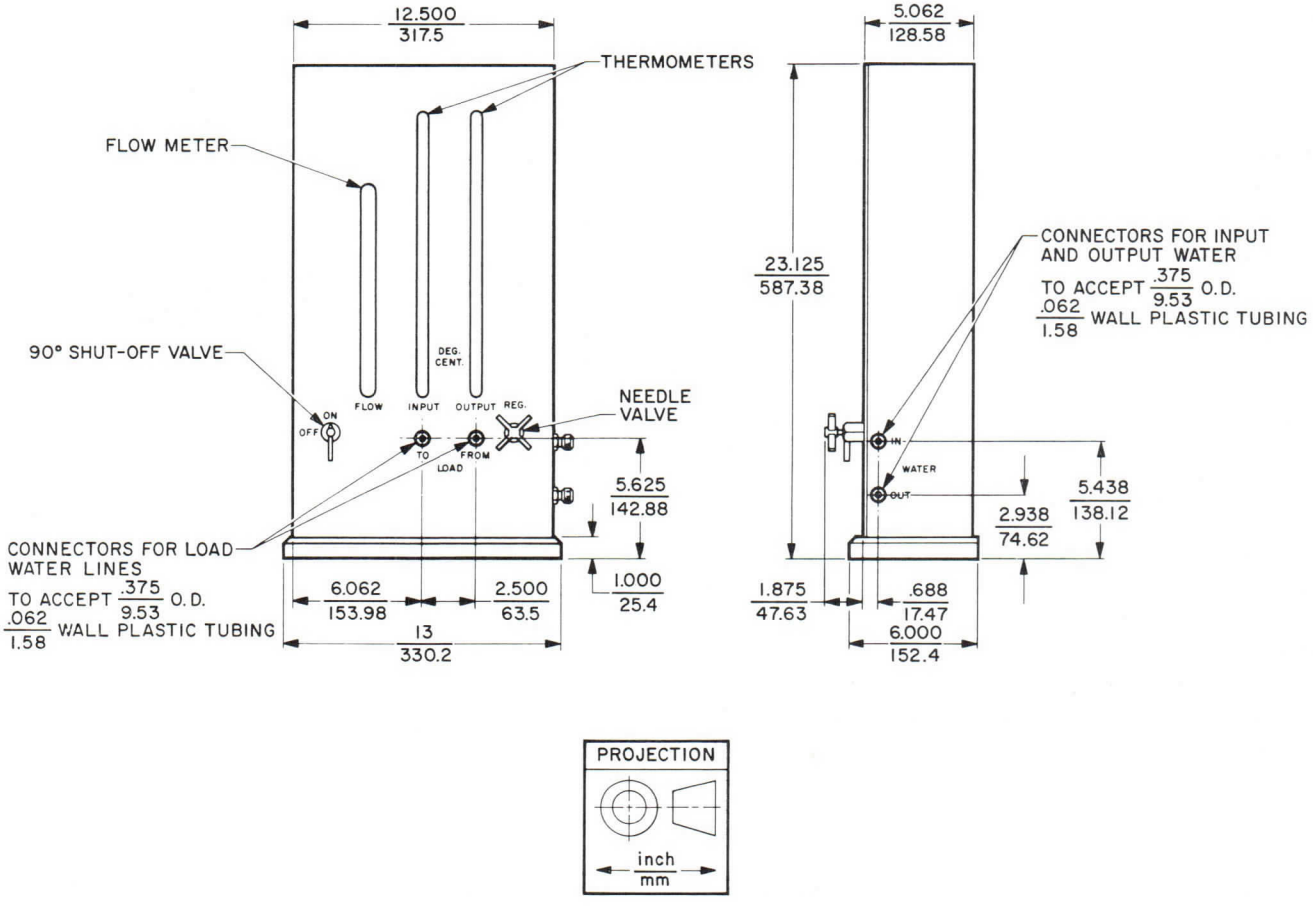

varian
palo alto tube division

TECHNICAL DATA

V-4030-30B

TABLE MODEL
CALORIMETER

DESCRIPTION

The Varian V-4030-30B Calorimeter is a heat measuring device for accurately measuring the average RF power absorbed in high-power water loads. It is designed for use with any Varian water load which dissipates RF power up to 30 kilowatts. The V-4030-30B includes a water flow meter, a flow-adjusting valve, a shut-off valve, and two thermometers, mounted in a portable cabinet. This calorimeter connects to the water supply and water load by means of Hansen fittings. For most accurate power measurements, the coolant lines between the calorimeter and the water load should be as short as possible. Modified versions can be furnished to meet special requirements.

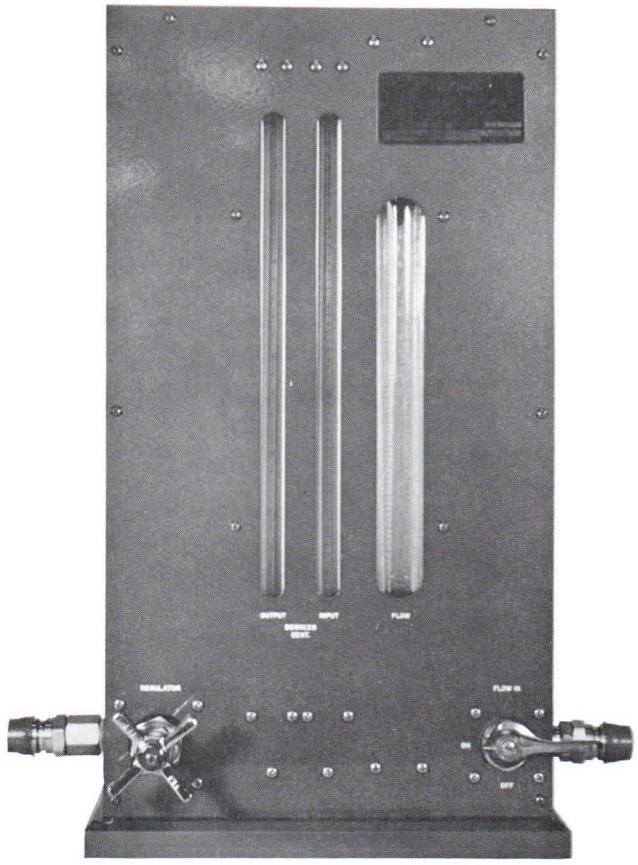

FEATURES

- Excellent accuracy
- Ease of calibration
- Simple operation
- High power

GENERAL CHARACTERISTICS [1]

Measurable Average Power, [2]
With 22°C rise, max ..... 30 kW
Accuracy
Thermometers ..... ±0.2 °C
Flow meter
at 21°C water temp ..... ±2% of full scale
Thermometers
Input Temperature Range ..... -1° to +51 °C
Output Temperature Range ... +25° to +75 °C
Scale Division ..... 0.1 °C
Coolant Flow, max ..... 5.96 gal/min
Coolant Pressure, max 80 lbf/in^{2}g
Dimensions ..... See Outline Drawing
Weight ..... 44 lb

NOTES:

1. Characteristic values are based on performance tests. These figures may change without notice as a result of additional data or product refinement. Consult Varian before using this information for equipment use.
2. The flow meter scale is calibrated in watts per degree Celsius for a mixture of 60 percent ethylene glycol and 40 percent water by weight. The rotometer can be calibrated for other percentage mixtures or for pure water. Power is determined simply by multiplying the flow meter reading by the difference between the outlet and inlet coolant temperature readings, as shown in the formula:

$$P = F (T_2 - T_1), \text{ where}$$

P = Power (W)
F = Flow meter reading
T_1 = Inlet coolant temperature (°C)
T_2 = Outlet coolant temperature (°C)

2833 9/72

Printed in U.S.A.

OUTLINE DRAWING

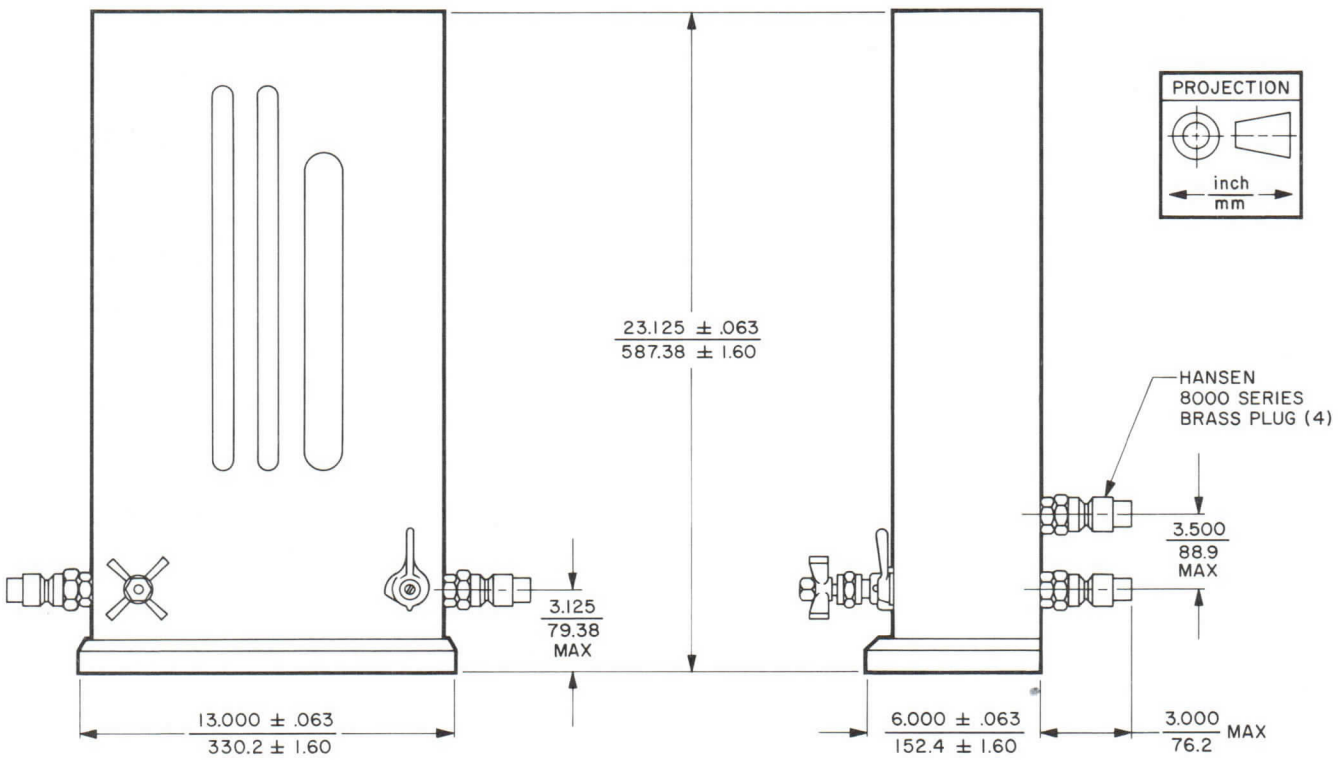

IF COMPONENTS

preamplifiers
main amplifiers
post amplifiers
logarithmic amplifiers
discriminators, AFC
voltage controlled attenuators

varian beverly

TECHNICAL DATA

ICP-1 Series

INTEGRATED CIRCUIT PREAMPLIFIER

DESCRIPTION

The ICP-1 series of low-noise solid-state preamplifiers provide wide dynamic range and high power output handling capability. Thin-film and integrated-circuit techniques are used to provide units occupying only 0.5 cubic inch with specifications comparable to conventional preamplifiers using point-to-point wiring. Consequently, a substantial savings in size, weight, and cost can be realized.

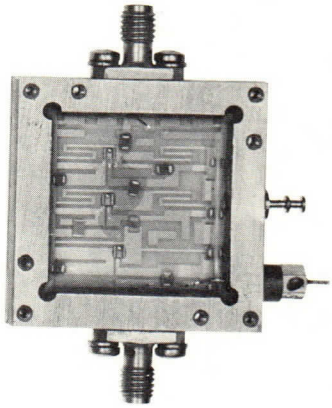

GENERAL CHARACTERISTICS[1]

ELECTRICAL

Center Frequency[2]	30, 60 or 70 MHz
Bandwidth at 3 dB, minimum[2]	10 MHz
Gain, minimum	32 dB
Noise Figure,	
Typical	2.5 dB
Maximum	3.0 dB
Input[3] and Output 50 ohm VSWR,	
maximum	2.0:1
Power Output at 1 dB Compression,	
minimum	0 dBm
DC Power Requirements,	
Voltage	+12 Vdc
Current	50 mA

PHYSICAL

Dimensions	1.3 x 1.3 x 0.3 in
Weight	< 1.0 oz
Connectors	
Input and Output	OSSM, 1.7 mm
Power	Filtercon 1VB50

ORDERING INFORMATION[2]

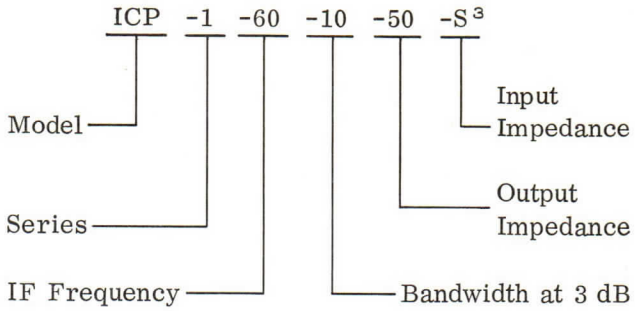

NOTES:

1. Characteristic values are based on performance tests. These figures may change without notice as a result of additional data or product refinement. Varian Beverly should be consulted before using this information for final equipment design.
2. When ordering, construct the model number as shown above. Specify the desired center frequency, 3 dB bandwidth and input impedance.
3. Any one of the following inputs can be furnished:
   - -50: 50 Ω, 2.0:1 VSWR, max
   - -S: 200 Ω, at 5 pF for single-ended mixers
   - -P: 100 Ω, at 10 pF for balanced mixers with reversed diodes

2568 5/71

Printed in U.S.A.

varian
solid state east division

TECHNICAL DATA

ITLM
Series

CONSTANT-TRANSMISSION PHASE LIMITERS

DESCRIPTION

The ITLM constant-transmission phase limiter is an i-f limiter that provides nearly constant transmission phase angle throughout its dynamic range. Typically, the total phase shift is less than 7.5 degrees over a 70-decibel dynamic range. Each of the two models offered can handle either pulse or CW signals and the characteristics below apply over 50 percent of the 3-dB i-f bandwidth. This device permits the development of new kinds of monopulse and pulse-signature-identification receivers. With this unit, phase comparison between two channels having unequal input signal levels can easily be made. When an ITLM is used in a system, amplitude differences, due to factors such as different antenna patterns, will not degrade the received phase information.

GENERAL CHARACTERISTICS[1]

Center Frequency
- ITLM-4 ..... 30, 60 or 70 MHz
- ITLM-5 ..... 120 MHz

Bandwidth, 3-dB
- ITLM-4 ..... 10, 15 or 20 MHz
- ITLM-5 ..... 30 MHz

Noise Figure, max ..... 10 dB

Output Limit Level, within 1-dB ..... 0 dBm

Dynamic Range ..... -70 to 0 dBm

Phase Match, -70 to 0 dBm, 3 units
- With equal input signals ..... 5 °
- With unequal input signals ..... 10 °

Input/Output Impedance
- With maximum VSWR of 1.5:1 ..... 50 Ω

Transmission Phase Shift
- For 70-dB dynamic range, typ .... 7.5 °
- For 70-dB dynamic range, max ... 10 °
- For 20-dB dynamic range, max ... 5 °

Power Supply Current, at -15 Vdc
- ITLM-4 ..... 150 mAdc
- ITLM-5 ..... 200 mAdc

Dimensions ..... See Outline Drawings

Weight
- ITLM-4 ..... 6 oz
- ITLM-5 ..... 8 oz

Temperature Range ..... -20 to +70 °C

DETECTED I-F OUTPUT PULSE RESPONSE

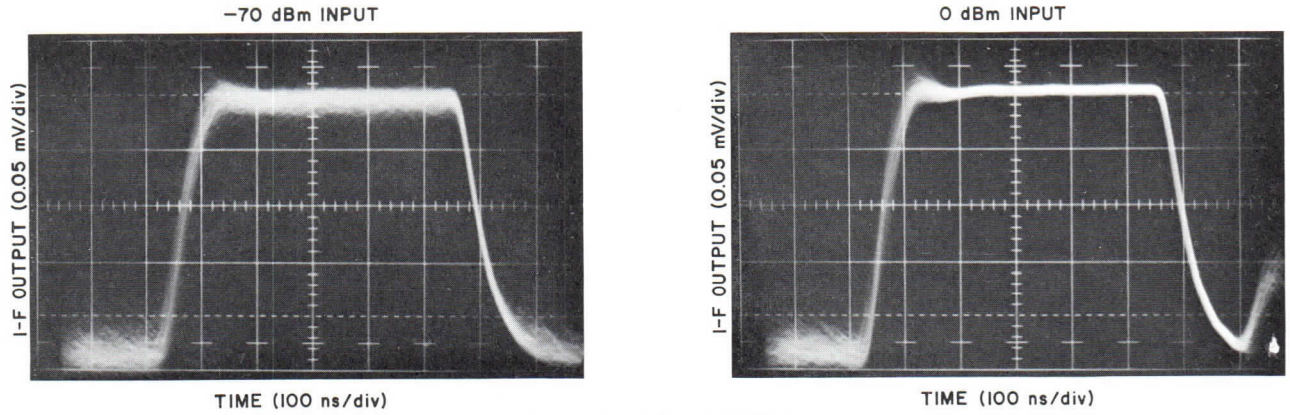

ITLM-60-20-50 LIMITER

3082 9/73

Printed in U.S.A.

CHARACTERISTIC CURVES[1]
Typical performance values

PHASE MATCH OVER DYNAMIC RANGE BETWEEN 3 UNITS

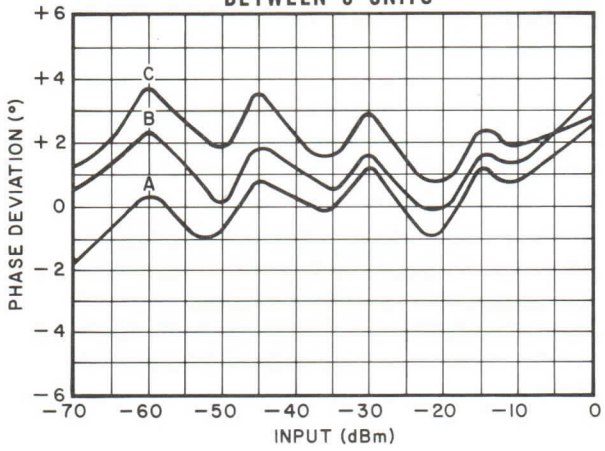

TRANSMISSION PHASE VARIATION WITH TEMPERATURE

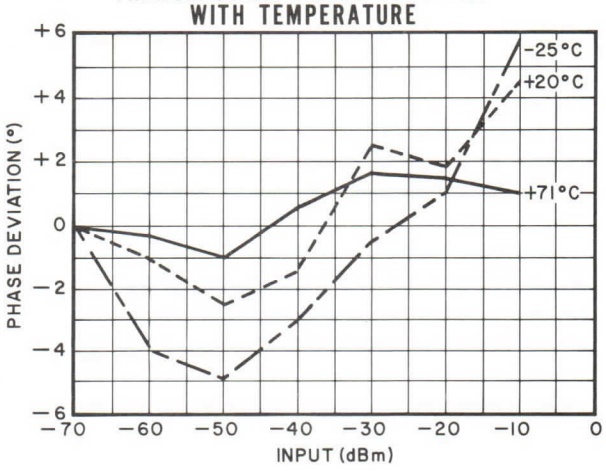

OUTLINE DRAWINGS

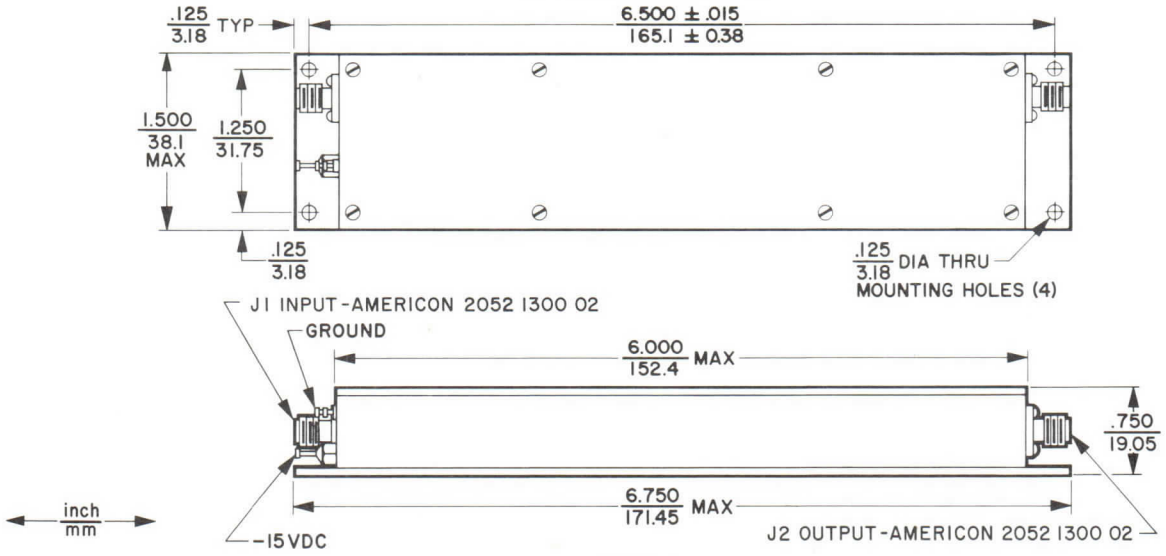

ITLM-4

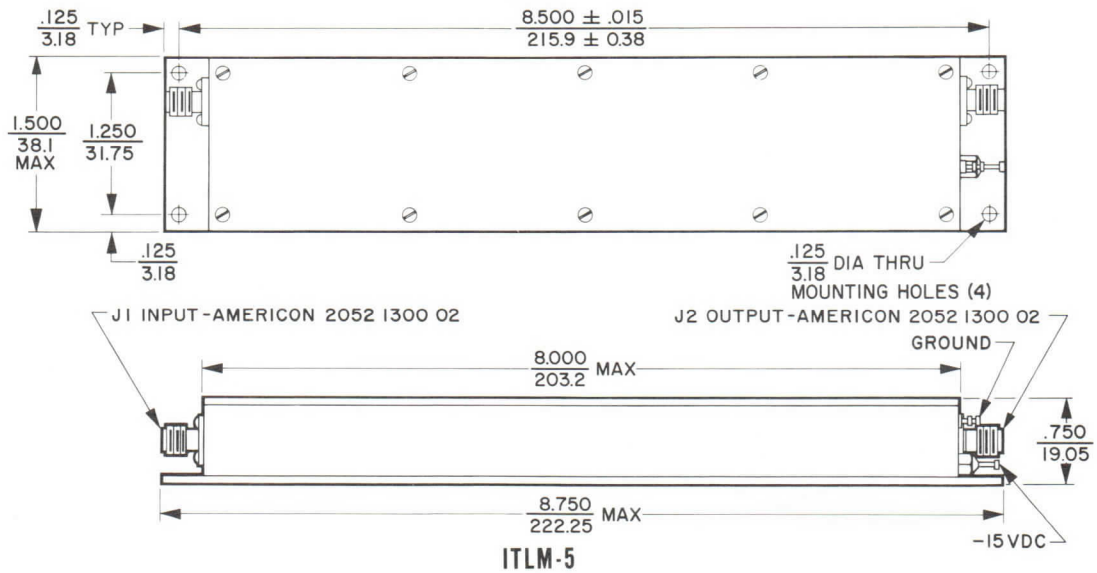

ITLM-5

NOTE:

1. Characteristic and curve values are based on performance tests. These values may change without notice as a result of additional data or product refinement. Consult the Varian Solid State East Division before using this information for equipment design.

varian
solid state east division

TECHNICAL DATA

ITV-1
Series

VARIABLE BANDWIDTH
SOLID STATE AMPLIFIER

DESCRIPTION

ITV-1 Series amplifiers are variable-bandwidth, voltage-controlled, solid-state amplifiers for use in receiving systems. A bandwidth variation of more than 60:1 is provided at 30 megahertz with constant gain over the entire bandwidth range. These features increase the versatility of receiving systems used for electronic warfare, spectrum surveillance, radio astronomy, and general laboratory projects. These amplifiers are also ideal for use in high-resolution and range-determining radar systems. With weak signals, high gain and narrow bandwidth are required, while strong signals (where greater accuracy is desired) require lower gain and wide bandwidth. Modified models which provide high gain and narrow bandwidth can be furnished on request. The ITV-1 is usually connected between a low-noise, wideband mixer-preamplifier (or preamplifier) and a post amplifier. The "Fast-time-constant" bandwidth control line can be actuated by either pulse or d-c voltage. By supplying the control voltage from a detector circuit, the ITV-1 can be used as an "automatic" bandwidth determining system.

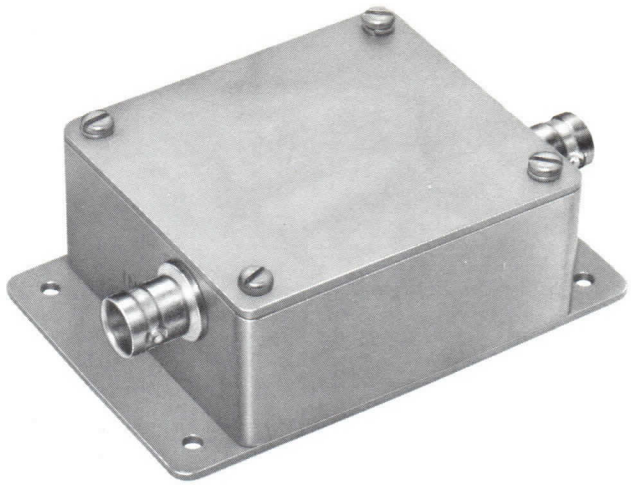

GENERAL CHARACTERISTICS[1]

ELECTRICAL

Center Frequency[2]	30, 60, 70, or 160 MHz
Bandwidth, 3 dB[2]	
Wideband, min	12, 20, 25, or 40 MHz
Narrowband, max	0.3, 0.4, 0.6, or 0.9 MHz
Gain, min	20 dB
Power Output, 1-dB compression, min	+3 dBm
Noise Figure, max	10 dB
Source and Load Impedance	50 Ω
Power Requirements	
Voltage	-20 Vdc
Current	35 mA
Bias Voltage	0 to -10 Vdc

PHYSICAL

Dimensions	See Outline Drawing
Weight, approx	6 oz
Mounting Position	Any
Connectors	
Input and Output	BNC for UG-290/U
Power	Eire Filtercon 1250-003

NOTES:

1. General characteristic values are based on performance tests. These figures may change without notice as a result of additional data or product refinement. The Varian Solid State Division should be consulted before using this information for final equipment design.
2. When ordering, add the center frequency, 3-dB bandwidth, and input impedance desired to the basic amplifier designation, as shown in the example.

ORDERING INFORMATION[2]

ITV-1 -30 -12 -50

- ITV-1: Amplifier Model
- -30: Center Frequency
- -12: Bandwidth at 3 dB
- -50: Input Impedance

3081 9/73

Printed in U.S.A.

CHARACTERISTIC CURVES

Typical performance values

WIDEBAND TO NARROWBAND IF OUTPUT RESPONSE ITV-1-30-12-50

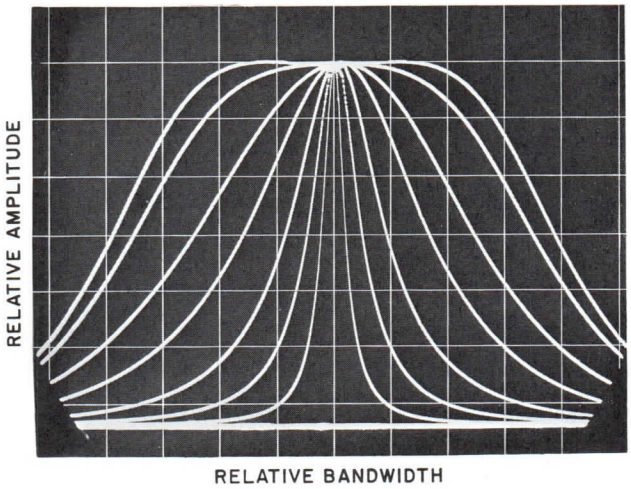

OUTLINE DRAWING

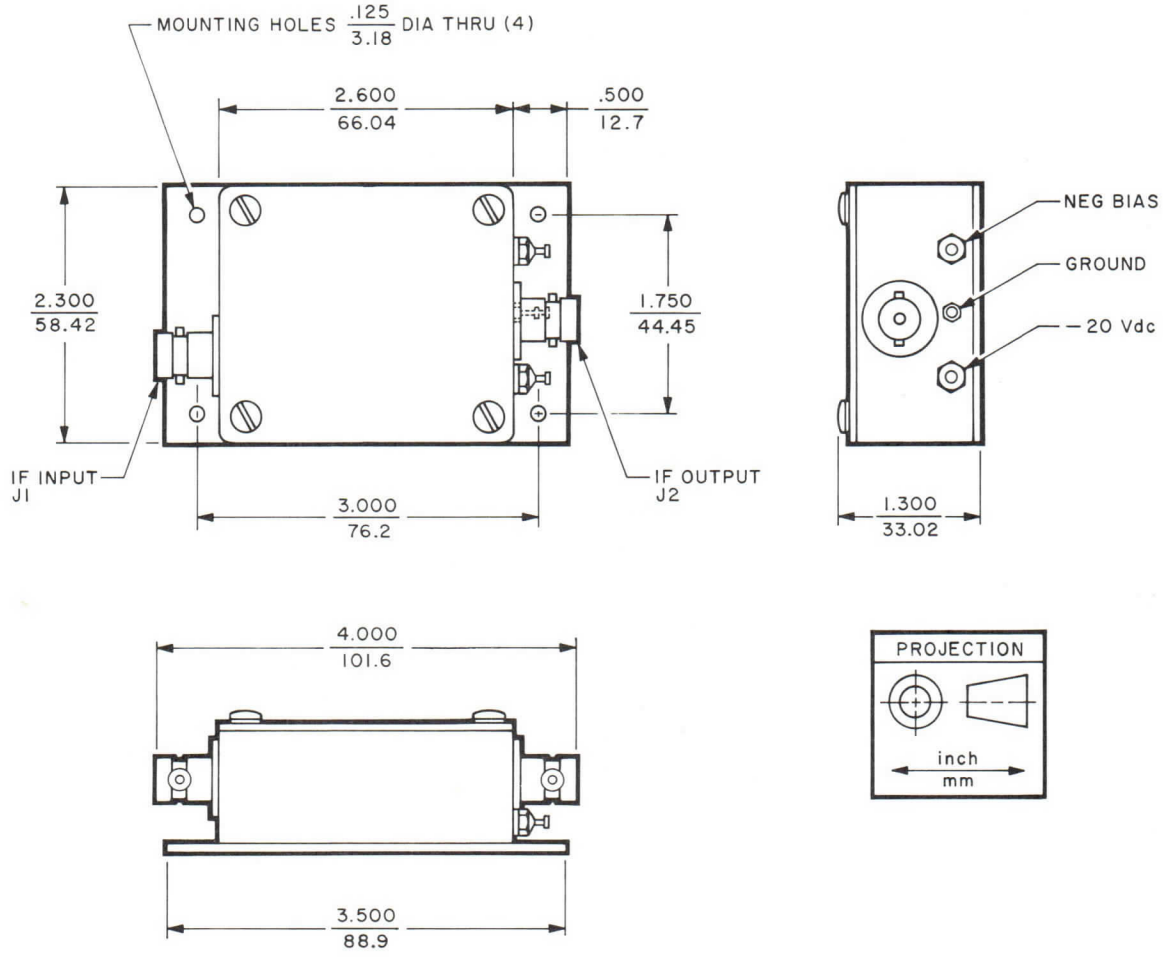

varian
solid state division

PRELIMINARY
TECHNICAL DATA

ITM-2
Series

SOLID-STATE
IF AMPLIFIER

DESCRIPTION

ITM-2 Series IF Main Amplifiers are sturdy, compact, solid-state devices designed for use in receiving systems. They combine the functions of both a preamplifier and postamplifier in one package. These amplifiers have coaxial, low-noise input circuits and provide sufficient gain to increase weak signals to a level adequate for detection. Both IF and VIDEO outputs are provided. Units featuring Gain and Phase tracking as functions of AGC range are available in matched sets. Silicon semiconductors are used throughout for long life, high reliability, and low d-c power requirements.

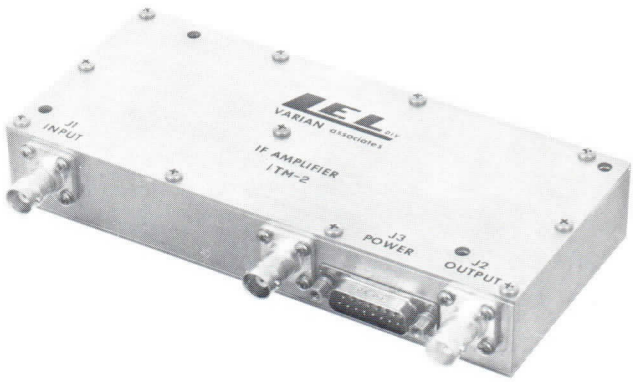

GENERAL CHARACTERISTICS[1]

Center Frequency[2]	30, 60, or 70 MHz
Bandwidth, at 3 dB, min[2]	10 MHz
IF Gain, min	90 dB
IF to Video Gain, a-c coupled, min	100 dB
Noise Figure, max	2.5 dB
IF Gain Control Range, min	60 dB
Phase Tracking, max	
At room temperature	2.0 °
TA = -55 to +70°C	3.5 °
Gain Tracking, max	
At room temperature	1.0 dB
TA = -55 to +70°C	1.5 dB
IF Output, at 1 dB compression, min	+13 dBm
Video Output, at 1 dB compression, 100-Ω load, min	+5 V
Pulse Output Rise Time, max	0.1 μs
Source Impedance, nom	50 Ω
IF Output Load Impedance, nom	50 Ω
Temperature Range, operating	-55 to +70 °C
Power Requirements	
Voltage	-20 Vdc
Current, max	120 mA
AGC Bias	0 to -10 Vdc
Dimensions	See Outline Drawing
Weight, approx	20 oz
Connectors	
IF and Video	Type BNC, UG-290/U
Input Power	Cannon DA15P

CHARACTERISTIC CURVES

Typical performance values

IF RESPONSE/GAIN ATTENUATION CHARACTERISTICS

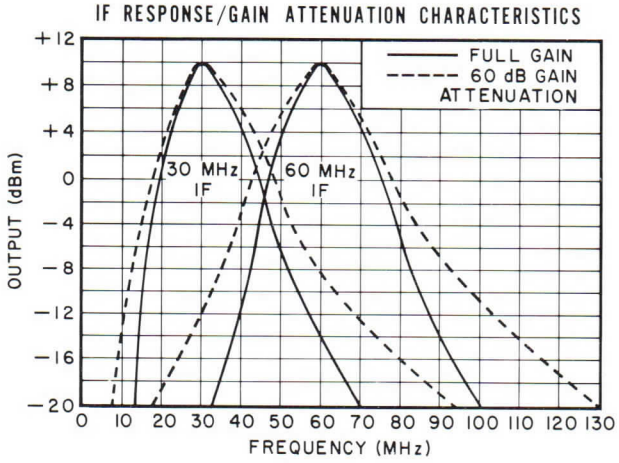

GAIN CONTROL CHARACTERISTICS

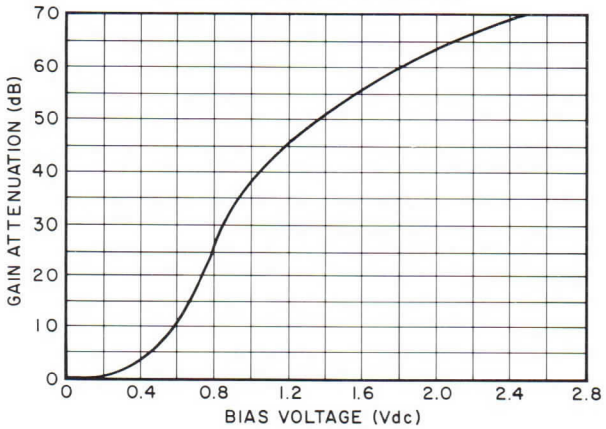

2498 1/71

Printed in U.S.A.

ITM-2-60-10-50-MP PHASE TRACKING VARIATION WITH GAIN ATTENUATION

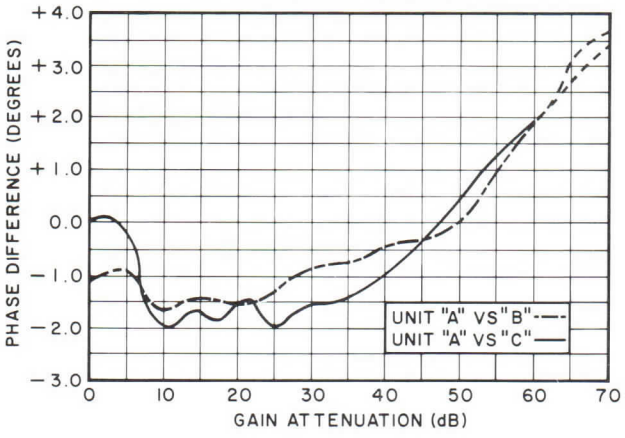

ITM-2-60-10-50-MP GAIN TRACKING VARIATION WITH GAIN ATTENUATION

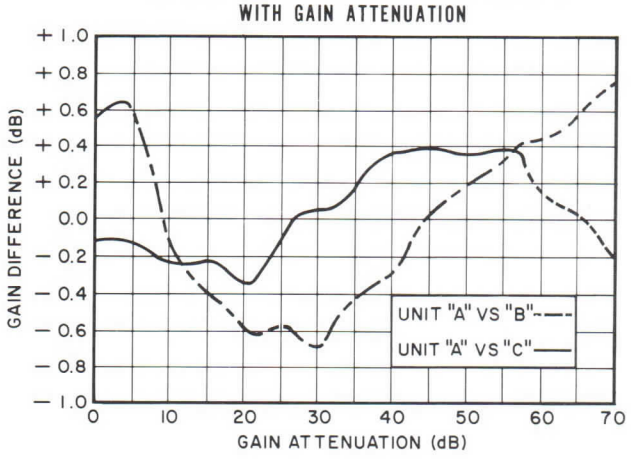

PHASE SHIFT WITH GAIN ATTENUATION FOR PHASE-MATCHED UNITS

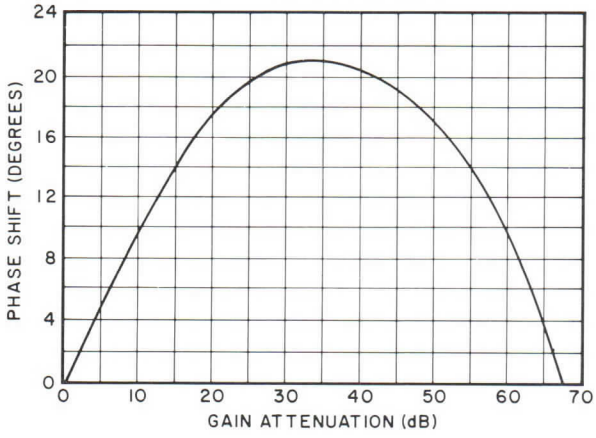

ORDERING INFORMATION[2]

ITM -2 -30 -10 50 -MP

- Model
- Series
- IF Frequency
- Bandwidth at 3 dB
- Output Impedance
- Matched Pair

NOTES:

1. General characteristic values are based on performance tests. These figures may change without notice as a result of additional data or product refinement. Consult the Varian Solid State Division, Copiague, L. I., New York before using this information for equipment design.
2. Models can be furnished at other center frequencies and bandwidths on special order. Specify the center frequency and bandwidth desired when ordering.

OUTLINE DRAWING

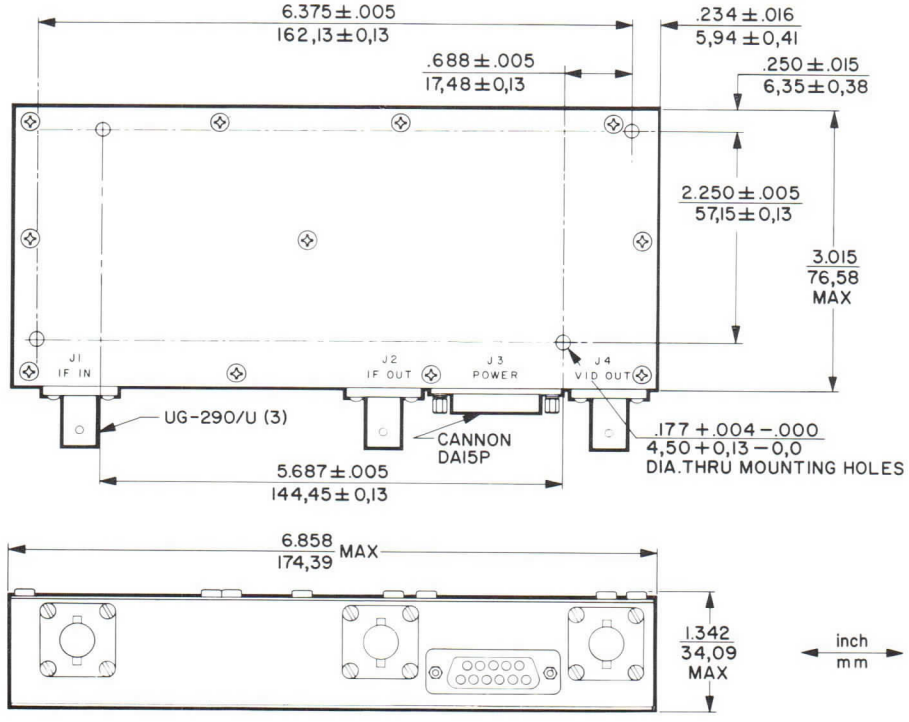

varian beverly

PRELIMINARY
TECHNICAL DATA

ITF-4
Series

SOLID STATE
SEARCH AND LOCK AFC

DESCRIPTION

The ITF-4 is a solid-state Search and Lock AFC unit, designed to operate in systems employing varactor-controlled devices such as Transistor Oscillators, Gunn Oscillators and Impatt Oscillators. The unit contains an IF amplifier, a discriminator, a video amplifier and a phantastron circuit. A function switch, in the "manual" position, allows an operator to tune the varactor-oscillator to the desired frequency. When the switch is in the "automatic" position, the AFC will sweep the varactor-oscillator frequency equally above and below the manually set frequency. When an IF signal appears at the ITF-4 input, the AFC will stop sweeping and will lock the varactor-oscillator to the system's IF frequency. Silicon semiconductors are used throughout for long life and high reliability.

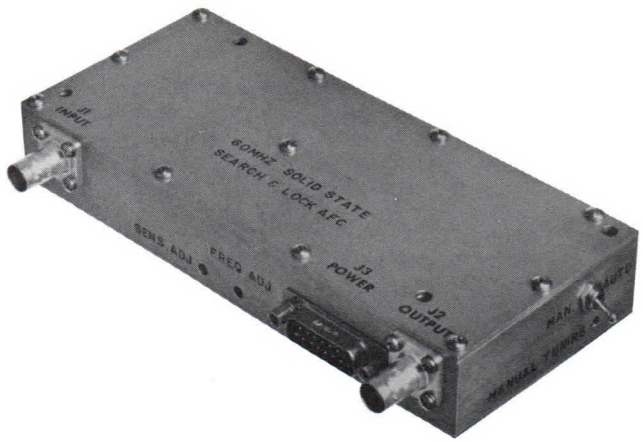

GENERAL CHARACTERISTICS[1]

ITF-4-60-08-50

Center Frequency[2]	60 MHz
Discriminator Bandwidth, peak-to-peak, min[2]	8 MHz
Required Input Signal Level, ±1 dB	0 dBm
Input Pulse Width, min	0.1 μs
Sensitivity, typical	20 V/MHz
Search Period, typical	13 ms
Sweep Range, typical	±5 V
DC Manual Range Adjustment[3]	+5 to +25 V
Input 50 Ohm VSWR, max	1.5:1
Output Load Resistance, min	100,000 Ω

Power Requirements, typical	
At +15 Vdc	25 mA
At -15 Vdc	55 mA
At +40 Vdc	5 mA
At -40 Vdc	30 mA
Temperature Range, operating	-40 to +70 °C
Dimensions	See Outline Drawing
Weight, approximate	20 oz
Input and Output Connectors	Type BNC
Power Connector	Cannon DA15P

NOTES:

1. General characteristic values are based on performance tests. These figures may change without notice as a result of additional data or product refinement. Consult the Varian Solid State Division before using this information for final equipment design.
2. Models can be furnished at other center frequencies and discriminator bandwidths on special order. Specify the center frequency and discriminator bandwidth desired when ordering.
3. If negative tuning voltage is required, so specify when ordering.

2916 11/72

Printed in U.S.A.

OUTLINE DRAWING

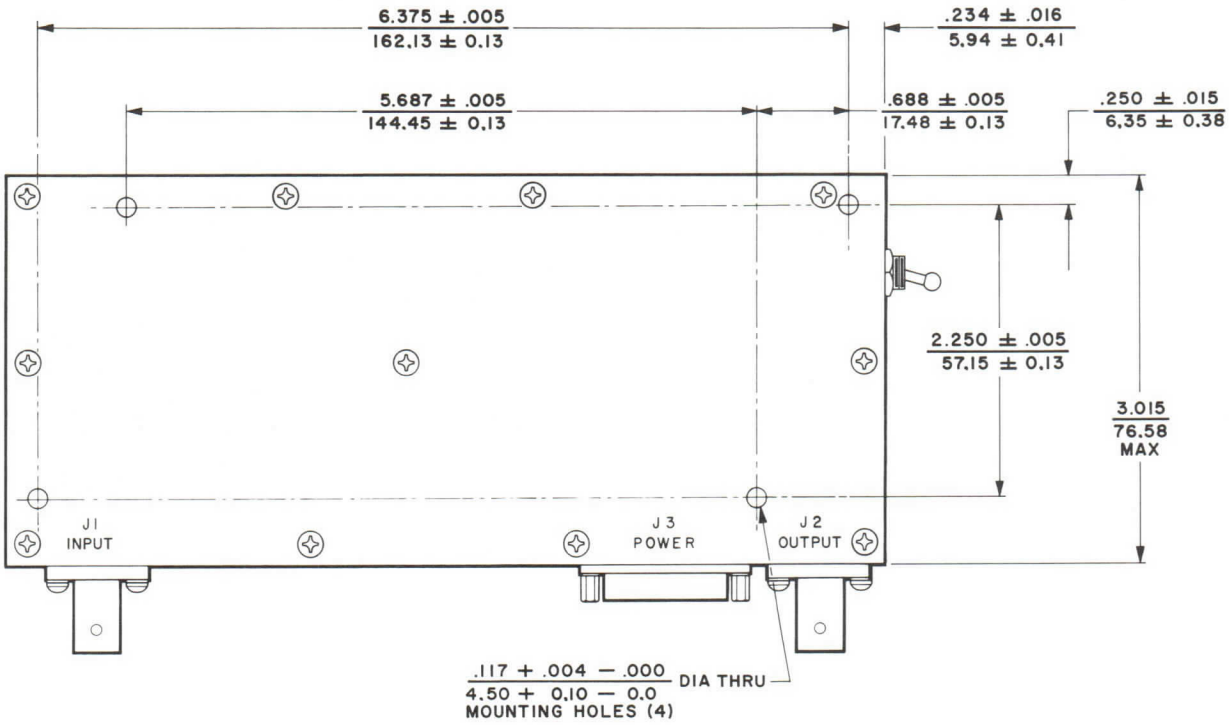

inch
mm

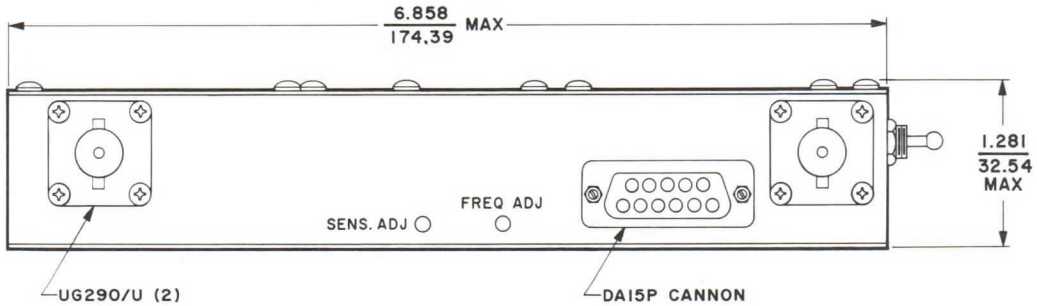

varian

TECHNICAL DATA

ICL-5
Series
HIGH FREQUENCY INTEGRATED CIRCUIT LOG AMPLIFIERS
600-2,000 MHz

DESCRIPTION

ICL-5 series of logarithmic amplifiers are hybrid, integrated circuit, i-f to log video amplifiers which can cover the frequency range of 600 to 2,000 megahertz. They are ideal for use in electronic-warfare and radar systems as well as monopulse tracking receivers. Each provides exceptional log linearity and stability over a wide temperature range. Excellent unit to unit reproducibility allows for units to be supplied as matched sets with the log-video amplitude matched to the input over the frequency and dynamic range.

The ICL-5 incorporates the Beverly Division's extensive experience in manufacturing hybrid integrated circuits. Reflow soldering techniques are used in assembly because of their proven reliability. Amplifiers can be supplied as standard humidity protected circuits or can be hermetically sealed. Excellent stability against oscillations has been achieved using a novel grounding scheme and broadband performance results from the use of modern computer-aided design.

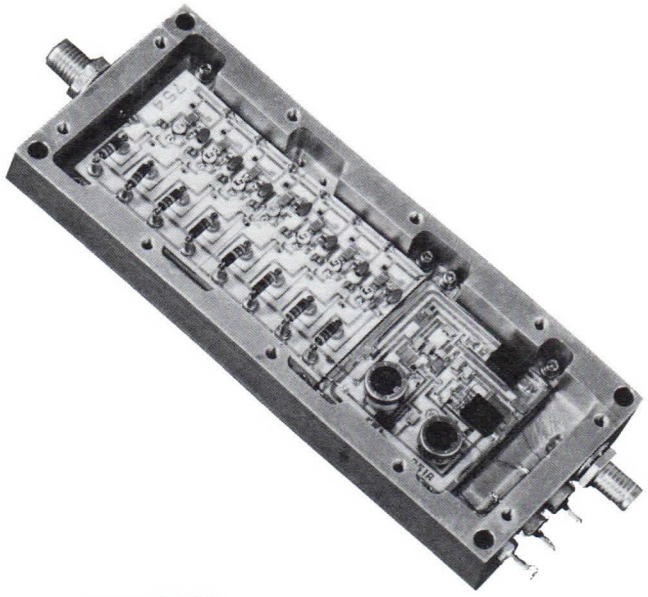

OPTIONS

- Hermetic Sealing
- High Temperature Operation to 85°C
- Power supply protection and regulation
- Matched Sets

GENERAL CHARACTERISTICS

Frequency Range[2] ..... 600 - 2000MHz

Input Dynamic
Range[3] ..... between −70 and +5 dBm

Log Linearity[4] over dynamic range and
selected frequency bands ..... ± 1 dB

Log Slope (Sensitivity) ..... 20 to 50 mV/dB

Rise Time
With 30 mV/dB log slope, max ..... 10 ns
With 50 mV/dB log slope, max ..... 15 ns

Fall Time, max ..... 100 ns

Input VSWR (relative to 50 Ω source)
For any 100 MHz band 1.5:1
For any 500 MHz band 2.0:1

Video Output, d-c coupled into 93Ω load, for 70 dB Dynamic Range
With 30 mV/dB log slope[5] ..... 0 to 2.2 Vdc
With 50 mV/dB log slope ..... 0 to 3.5 Vdc

D-C offset ..... 0 ± 100 mV

Operating Temperature ..... −30 to 70°C

Power Supplies Required[6]
Voltage, at 160 mAdc, max ..... +15 Vdc
Voltage, at 50 mAdc, max ..... −15 Vdc
or
Voltage, at 160 mAdc, max ..... +12 Vdc
Voltage, at 50 mAdc, max ..... −12 Vdc

Dimensions ..... See Outline Drawings

Weight, max ..... 4 oz/114 g

4386 - 9/80

Printed in U.S.A.

TABLE I

Nominal Center Frequency (MHz)	Minimum 3dB Bandwidth (MHz)	Minimum Dynamic Range[3] (dB)	Minimum TSS – (dBm)	Type Number[7]
750	300	70	80	ICL-5-750-300
750	200	70	80	ICL-5-750-200
750	100	70	82	ICL-5-750-100
750	50	70	82	ICL-5-750-50
1000	500	70	75	ICL-5-1000-500
1000	300	70	80	ICL-5-1000-300
1000	200	70	80	ICL-5-1000-200
1000	100	70	82	ICL-5-1000-100
1000	50	70	82	ICL-5-1000-50
1250	300	65	75	ICL-5-1250-300
1250	200	65	75	ICL-5-1250-200
1250	100	65	78	ICL-5-1250-100
1250	50	65	80	ICL-5-1250-50
1500	300	60	70	ICL-5-1500-300
1500	200	60	70	ICL-5-1500-200
1500	100	60	75	ICL-5-1500-100
1500	50	60	75	ICL-5-1500-50
1750	200	55	70	ICL-5-1750-200
1750	100	55	70	ICL-5-1750-100
1750	50	55	75	ICL-5-1750-50
1800	200	55	70	ICL-5-1800-200
1800	100	55	70	ICL-5-1800-100
1800	50	55	75	ICL-5-1800-50
1850	200	55	70	ICL-5-1850-200
1850	100	55	72	ICL-5-1850-100
1850	50	55	73	ICL-5-1850-50
1900	200	55	70	ICL-5-1900-200
1900	100	55	72	ICL-5-1900-100
1900	50	55	73	ICL-5-1900-50
1950	100	55	72	ICL-5-1950-100
1950	50	55	73	ICL-5-1950-50

GENERAL CHARACTERISTICS (Continued)[1]

NOTES

1. Characteristics and performance curves are based on tests performed at 25°C, unless otherwise specified. These values may change without notice as the result of additional data or product refinement. The Varian Beverly Division should be consulted before using this information for final equipment design.
2. This series of amplifiers are designed to cover the entire range, however, are optimized for specific bands. Typical ranges are shown in Table I.
3. The input dynamic range is dependent on frequency. Consult Table I for dynamic range of a specific band.
4. For full temperature range operation, add ± 0.5 dB to log linearity.
5. At 30 mV/dB, the video output can drive loads as low as 50Ω.
6. Log amplifiers are available with reverse power supply and 25 Vdc over voltage protection.
7. When ordering, construct the type number as shown below. Specify the center frequency and bandwidth. Other center frequencies can be furnished on special order.

ORDERING INFORMATION[7]

ICL · 5 · 1000 · 500

MODEL — ICL
SERIES — 5
CENTER FREQUENCY — 1000
BANDWIDTH — 500

CHARACTERISTIC CURVES TYPICAL PERFORMANCE AT 25°C[1]

These plots are of typical ICL-5 logarithmic amplifiers tested on an automated test station. The computer not only controls the testing of the log amps but also calculates the log slope and intercepts from the raw data and plots the data graphically so that system performance can be easily predicted.

LOG LINEARITY AND LOG SLOPE

LOG LINEARITY/RIPPLE

A figure often used to indicate the accuracy of a logarithmic amplifier is log linearity. At any frequency and temperature, it is the maximum deviation of the log curve from the best fit straight line at that frequency and temperature. This is commonly referred to as periodic ripple. The deviation shown here is better than ± 1 dB from a log slope of 49.54 mV/dB.

LOG SLOPE

The log slope is the average slope in mV/db of the straight-line portion of the log curve. For the ICL-5 series of amplifiers, this is typically 20 to 30 mV/dB. For special requirements, this can be adjusted to values greater than 50 mV/dB. The log slope is expected to vary somewhat with frequency and temperature. The performance data shown for this amplifier was taken in 1 dB increments over the input power range of –55 to 0 dBm at a frequency of 1.8GHz.

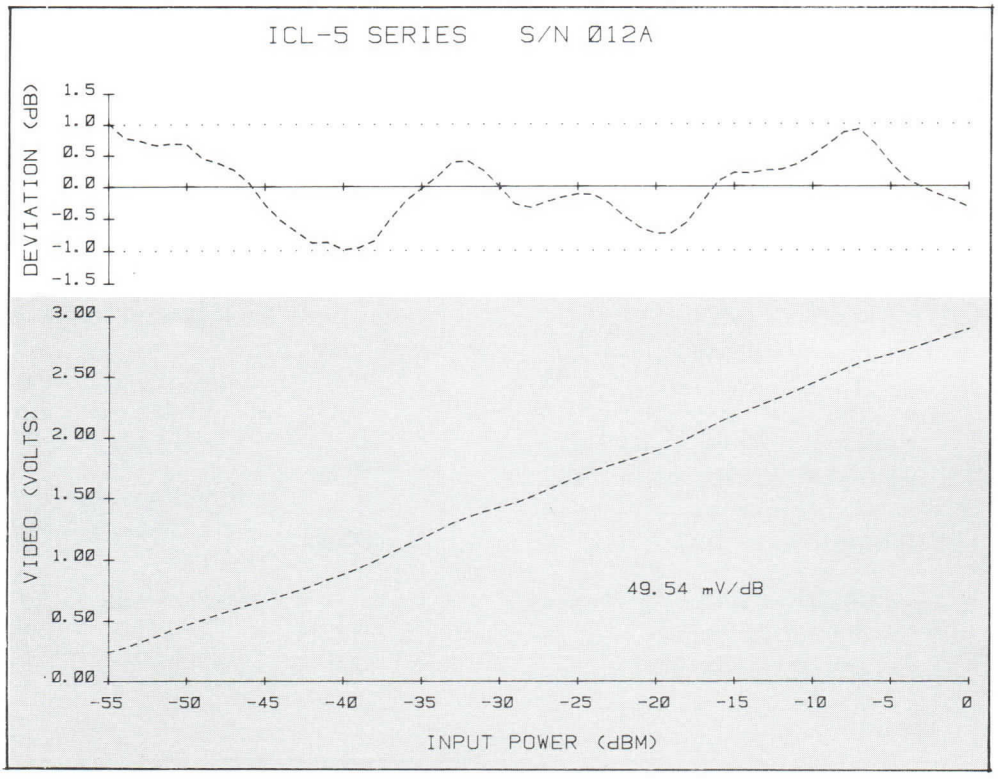

LOG LINEARITY WITH BANDWIDTH

Another method of measuring accuracy of a log amplifier is to compare the relative output voltage at all frequencies in the band of interest. Ideally at any given input power level, the output voltage will be the same for all frequencies. Varian logarithmic amplifiers are designed to be intrinsically broadband, and for many applications can be used with the full intrinsic IF bandwidth. This allows the system designer to expect a high degree of accuracy in amplitude measurements instantaneously over extremely broad bandwidths.

The data plotted on these curves show ICL-5 series log amplifiers centered at the frequencies of 1 GHz and 1.75 GHz.

The output video voltage at each frequency is plotted at its corresponding input IF power level in dBm. In an ideal case, these lines will be equidistant from each other and perfectly flat over the band of interest.

The excellent performance shown here can be optimized for narrower bandwidths. For some applications it is desirable to limit the IF bandwidth in order to limit the corresponding small-signal noise bandwidth. When this is required, a filter can be added between the fourth and fifth stages of the amplifier. This limits the noise bandwidth of both the input noise from the receiver front-end and the self noise of the logarithmic amplifier.

Varian defines bandwidth as the minimum 3 dB bandwidth measured close to the video noise level where the detected output is approximately linear.

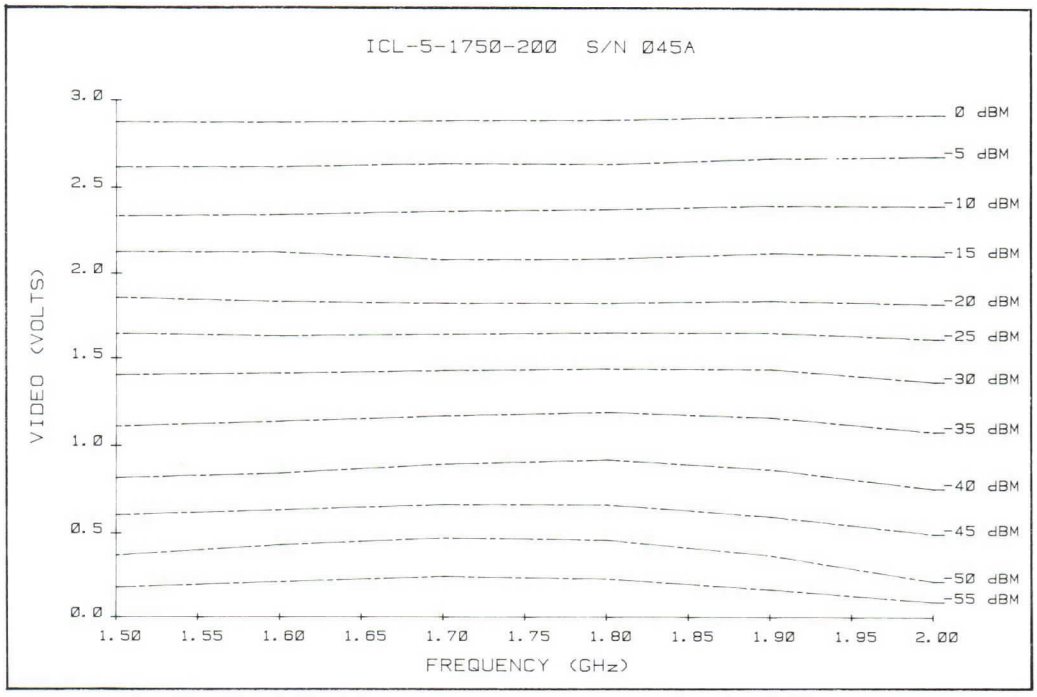

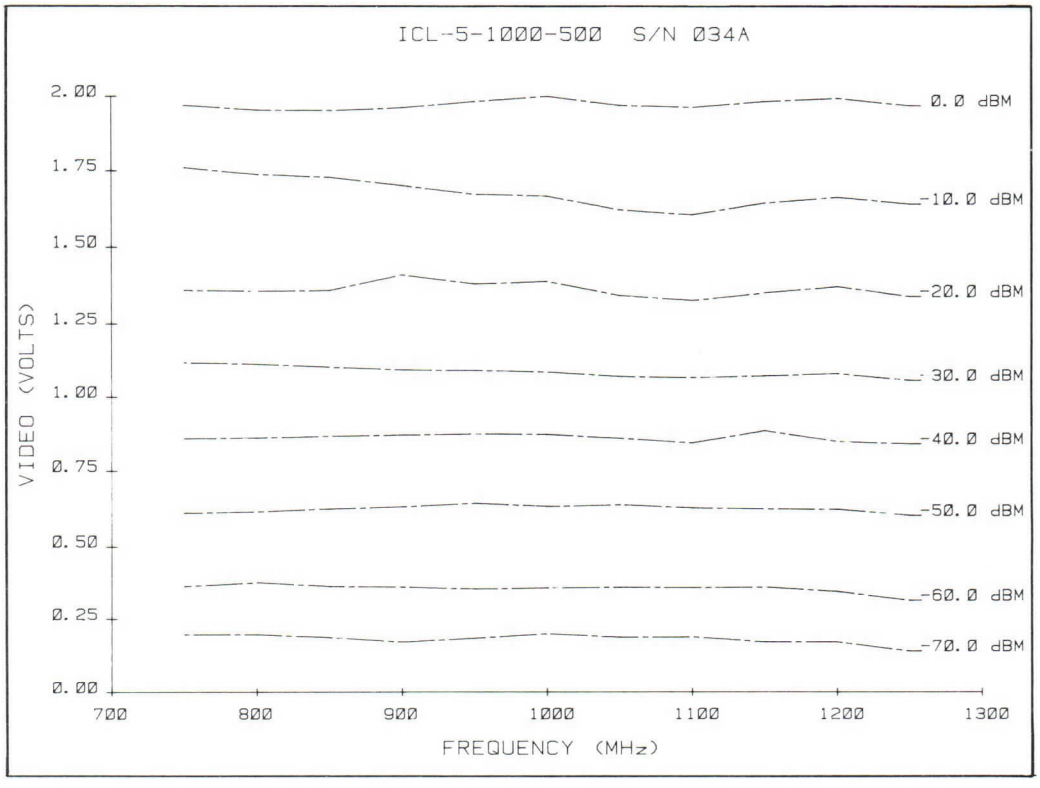

OUTLINE DIMENSIONS

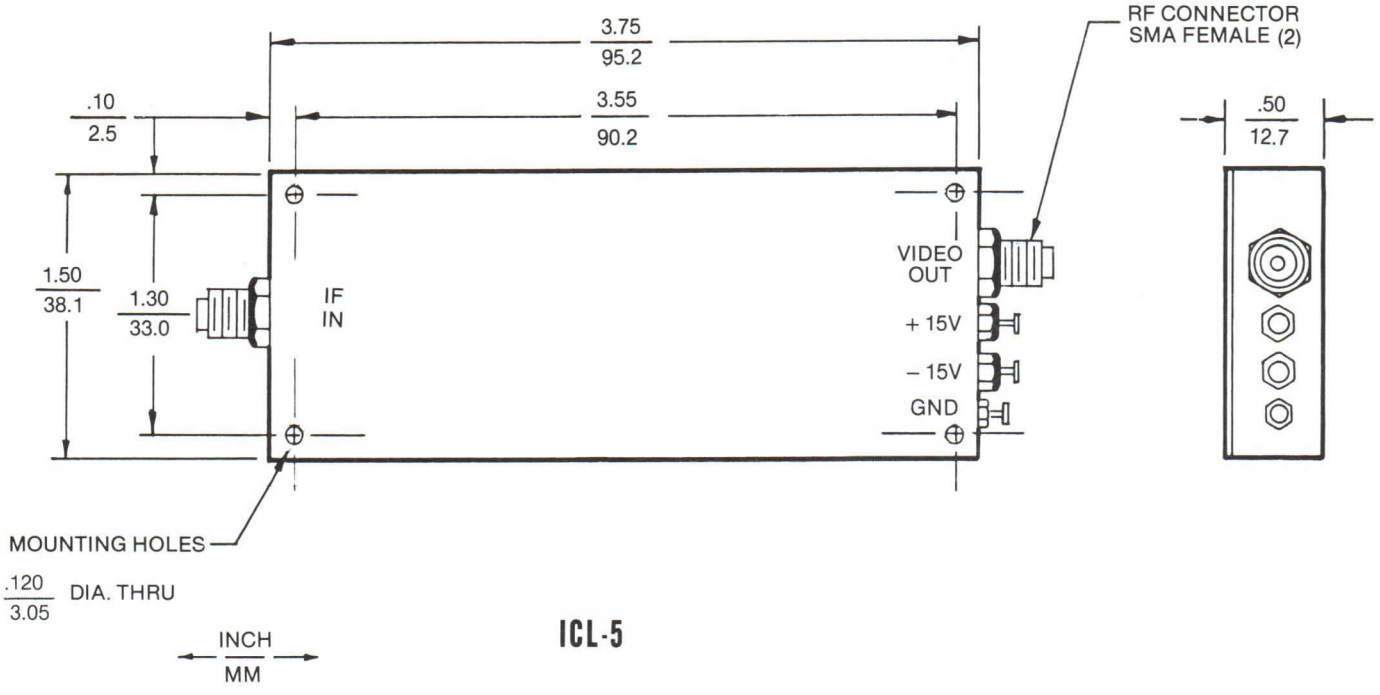

ICL-5

varian

TECHNICAL DATA

ICL-6-160-80

WIDE DYNAMIC RANGE
INTEGRATED CIRCUIT
LOG AMPLIFIER

DESCRIPTION

The ICL-6-160-80 logarithmic amplifier is a low-cost, hybrid-integrated-circuit, video i-f amplifier for receiver and signal processing applications in radar and EW systems. It provides excellent logging accuracy and stability over a wide temperature range.

The ICL-6 embodies Varian/Beverly's extensive experience in manufacturing hybrid-integrated-circuit devices. Reflow soldering techniques are used in assembly because of their proven reliability. Excellent stability against oscillations is achieved by using a novel grounding scheme. Several extra-cost options are availble. This amplifier is designed to meet the requirements of MIL-E-5400, Class II, environments.

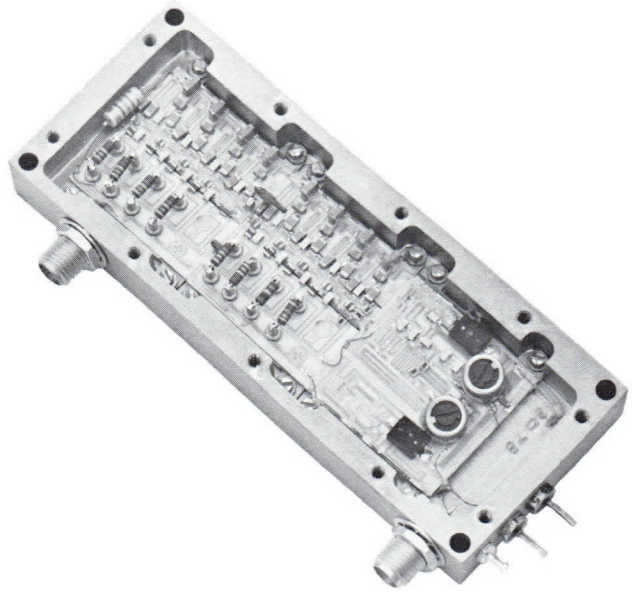

OPTIONS[1]

- Wider bandwidths — up to 500 MHz
- Higher gain
- Limited i-f output — ±2 dB at 0 dBm
- Integral voltage regulation
- Temperature stabilization
- Hermetic sealing
- Units matched within ±1 dB over entire frequency and dynamic ranges

GENERAL CHARACTERISTICS[2]

Center Frequency, ±10 MHz	160 MHz
Bandwidth, 3 dB	80 MHz
Input Dynamic Range	
Between -75 dBm and +5 dBm	Any 70 dB
Video Rise Time	20 ns
Log Accuracy (Linearity),	
Over the dynamic range, at 25°C	±1 dB
Input Impedance	50 Ω
Video Output Load Impedance	93 Ω
Video Output Voltage, max	2.5 Vdc
D-C Offset Drift, 0° C to 60° C	±1 dB
Power Supplies Required	
Voltage, at 80 mAdc max	+12 Vdc
Voltage, at 125 mAdc max	-12 Vdc
Dimensions	See Outline Drawing
Weight	<4 oz/<114 g
Operating Temperature Range	-54 to ±80 °C

NOTES:

1. These options are available at extra cost and may require longer delivery time.

2. Characteristics are based on performance tests performed at 25° C unless otherwise specified. These values may change without notice as the result of additional data or product refinement. The Varian Beverly Division should be consulted before using this information for final equipment design.

3643 2/77

Printed in U.S.A.

varian/beverly division/salem road/beverly/massachusetts 01915

OUTLINE DRAWING

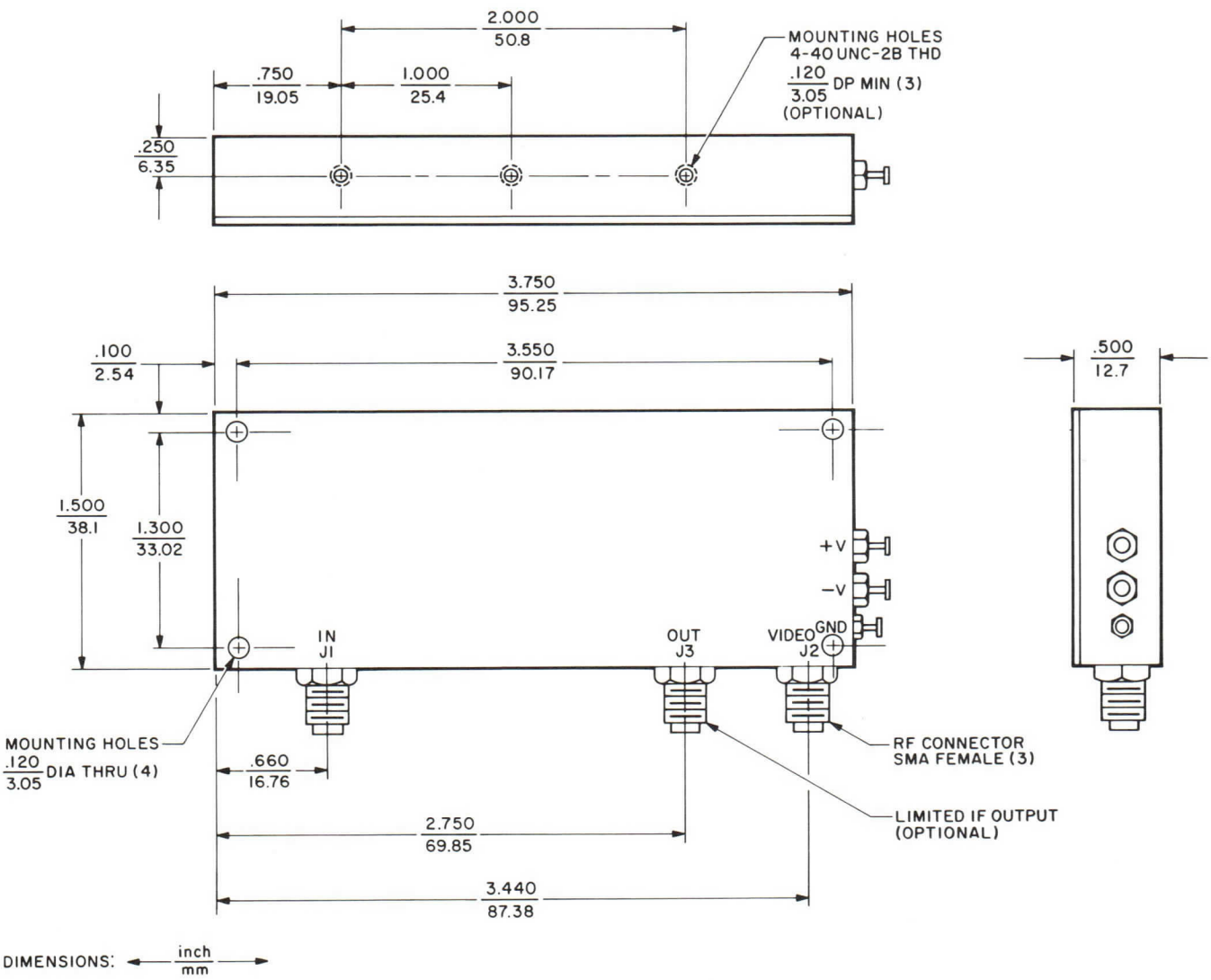

DIMENSIONS: ← inch / mm →

varian
solid state division

TECHNICAL DATA

ITL-7
Series

WIDE DYNAMIC RANGE
SOLID STATE
LOG AMPLIFIERS

DESCRIPTION

ITL-7 logarithmic amplifiers are solid-state, sequential detection, video i-f amplifiers which provide wide dynamic range and exceptional log accuracy. They are ideal for use in electronic-warfare and radar systems as well as monopulse tracking receivers. When used instead of the usual AGC i-f amplifier, ITL log amplifiers provide improved performance in the reception of high-speed pulses. Although these amplifiers are designed for pulse or AM signals, most can be supplied with d-c coupled output to process CW information.

Special models having linear and limited i-f output can be furnished on request. These amplifiers can be supplied as matched pairs with the log-video amplitude matched to the input within 1 decibel.

GENERAL CHARACTERISTICS[1]

Input Dynamic Range	-80 to 0	dBm
Log Accuracy	± 1	dB
Sensitivity	22	mV/dB
Overshoot, max	5	%
Output Load Impedance	93	Ω
Source Impedance	50	Ω
Operating Temperature Range	-40 to +70	°C
Power Requirements		
Voltage	-15	Vdc
Current	100	mAdc
Weight	6	oz

Operating Frequency (MHz)	Minimum Small Signal -3 dB Bandwidth (MHz)	Rise Time (μs)	Type Number
30	10	0.1	ITL-7-30-10-50
30	18	0.06	ITL-7-30-18-50
60	10	0.1	ITL-7-60-10-50
60	20	0.05	ITL-7-60-20-50
70	10	0.1	ITL-7-70-10-50
70	20	0.05	ITL-7-70-20-50
160	20	0.05	ITL-7-160-20-50
160	30	0.03	ITL-7-160-30-50

OPTIONS[1]

LIMITED I-F OUTPUT

Output Dynamic Range	-70 to 0	dBm
I-F Output, nominal	0	dBm
Output Load Impedance	50	Ω
Output Variation		
Over Dynamic Range of -60 to 0 dBm	±1	dB
Over Dynamic Range of -70 to 0 dBm	±3	dB

D-C COUPLED OUTPUT

D-C Offset	0 ± 10	mV
D-C Offset Drift, from -40 to +70 °C	100	mV
Power Supplies Required		
Voltage, at 100 mAdc	+15	Vdc
Voltage, at 100 mAdc	-15	Vdc

2901 10/72

Printed in U.S.A.

OUTLINE DRAWING

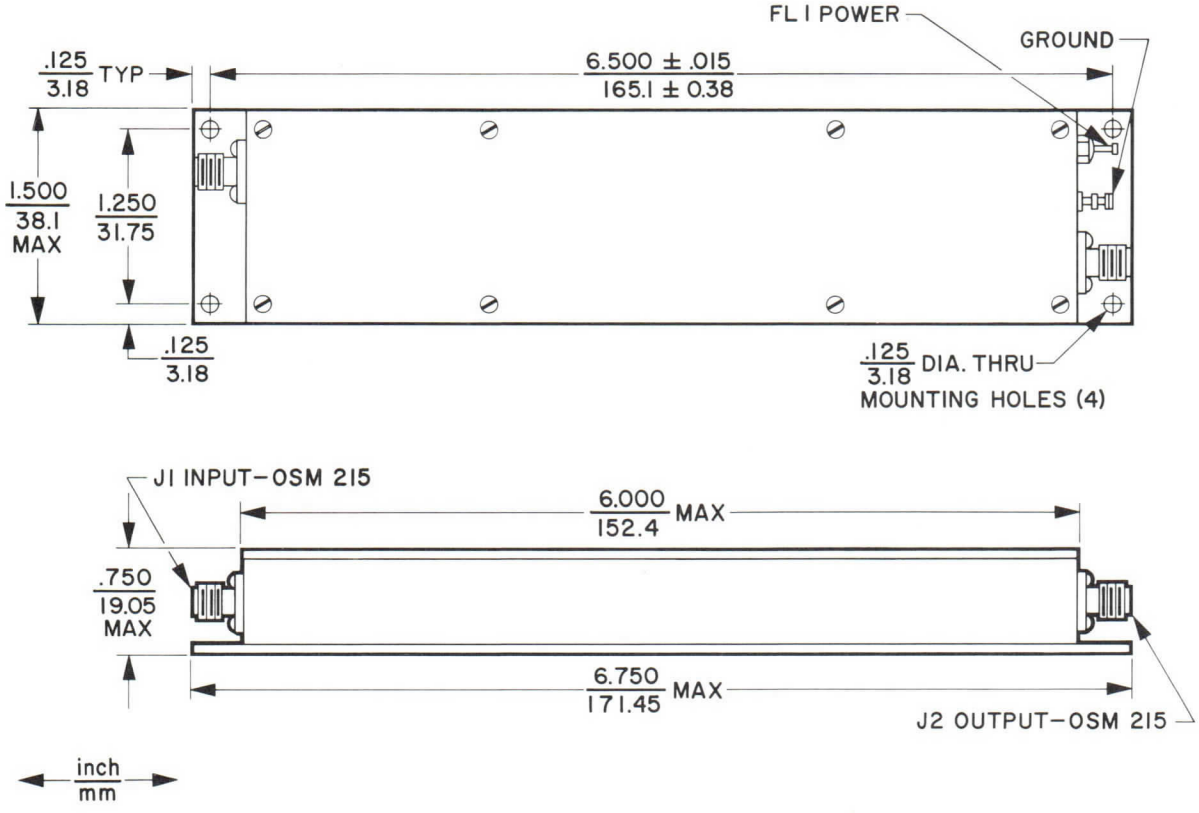

NOTE:

1. Characteristics and operating values are based on performance tests. These figures may change without notice as a result of additional data or product refinement. Consult the Solid State Division before using this information for equipment design.

varian
solid state east division

TECHNICAL DATA

KC-7A

COAXIAL MIXER-PREAMPLIFIERS

1.0-18.0 GHz

DESCRIPTION

The KC-7A series of coaxial mixer-preamplifiers are low-noise, solid-state devices which combine the improved performance of Schottky-barrier-diode mixers with a unique preamplifier design. This combination produces lower noise figures than previously available and significantly increased power handling capability. The increased power-handling capability extends the dynamic range available to receiver designers, and reduces the level of unwanted intermodulation products. The preamplifier operates with low d-c input power. All units provide crystal current monitoring that can be d-c biased for lower LO input power. Solid-state components and a rugged i-f printed circuit assure high reliability and uniform construction.

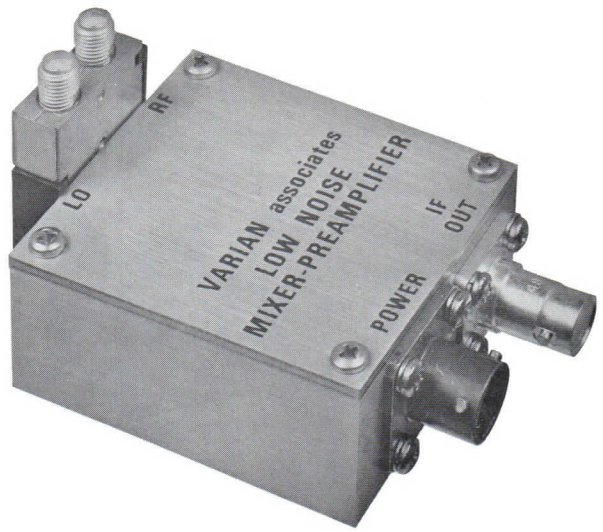

GENERAL CHARACTERISTICS [1]

RF Frequency Range (GHz)	Noise Figure[2] Typical (dB)	Noise Figure[2] Maximum (dB)	Maximum RF and LO VSWR at 50 Ω Impedance	Minimum LO to RF Isolation (dB)	Minimum RF to IF Gain (dB)	Basic Model Number[3]
1.0-2.0	7.5	8.0	1.35:1	5	20	LKC-7A
2.0-4.0	7.5	8.0	1.35:1	5	20	SKC-7A
4.0-8.0	8.0	8.5	1.5:1	5	20	CKC-7A
8.0-12.4	8.0	8.5	1.7:1	5	20	XKC-7A
12.4-18.0	8.5	9.0	1.7:1	5	20	KKC-7A

ELECTRICAL

Power Output, at 1 dB compression
- Typical ..... +10 dBm
- Minimum ..... +8 dBm

Bandwidth, 3 dB[3] ..... 10, 20, or 40 MHz
Intermediate Frequency 30, 50, 60, or 70 MHz
IF Output VSWR, maximum 2:1
LO Input Power ..... 3 to 4 mW
Output Impedance[4] ..... 50 Ω
DC Power Requirements
- Voltage[5] ..... -20 Vdc
- Current ..... 10 mA

PHYSICAL

Dimensions ..... See Outline Drawings
Weight, maximum ..... 6 oz
Connectors
- RF and LO ..... SMA-3 mm
- IF ..... BNC, UG-290A/U
- Power ..... Bendix PTO2E-10-6P

ORDERING INFORMATION[6]

L KC -7A -30 -10 -50

- L — Frequency Band
- KC — Mixer Type
- -7A — Preamplifier Type
- -30 — Intermediate Frequency
- -10 — Bandwidth At 3 dB
- -50 — Output Impedance

2969 3/73

Printed in U.S.A.

OUTLINE DRAWINGS

LKC-7A

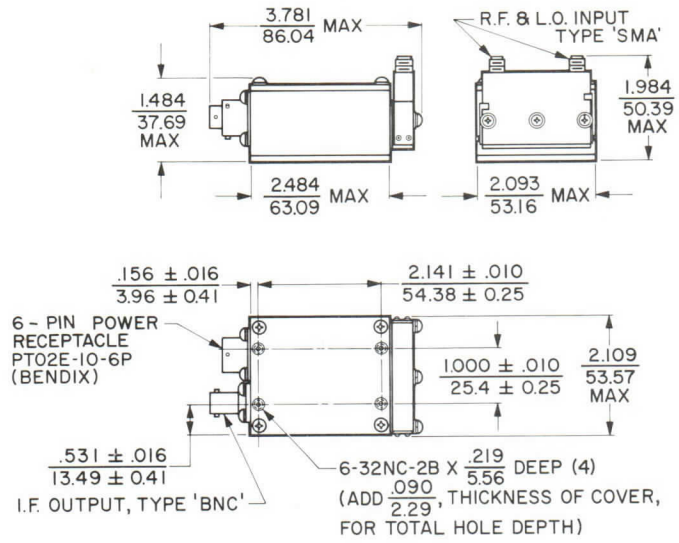

SKC-7A

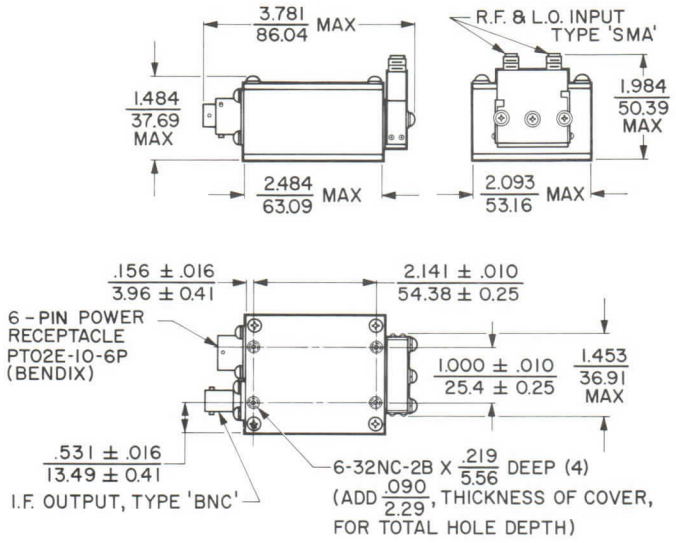

CKC-7A & XKC-7A

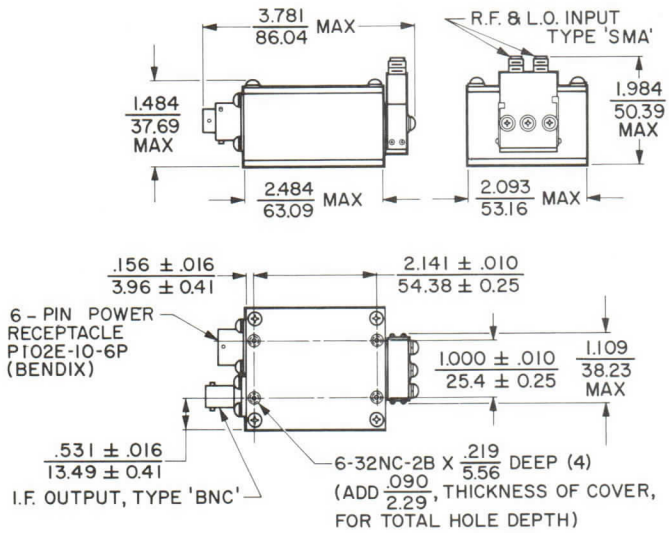

KKC-7A

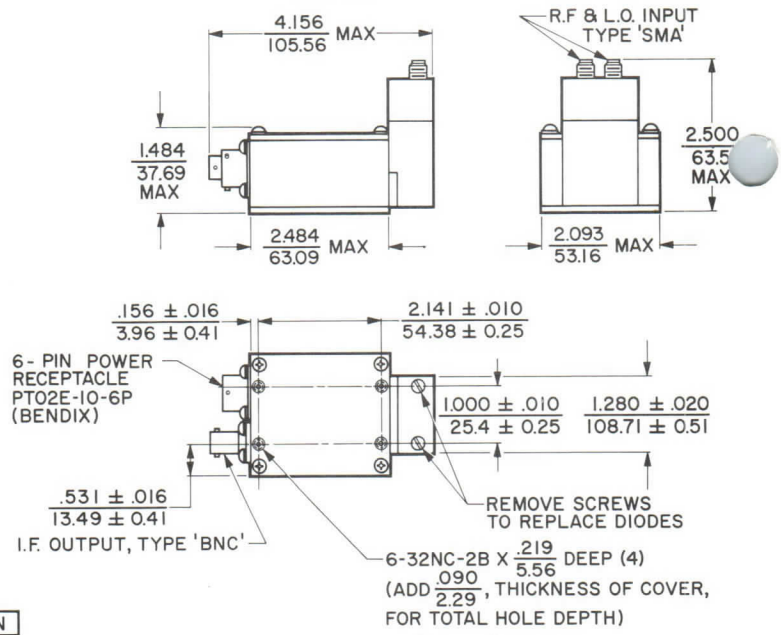

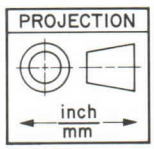

R.F. AND L.O. INPUTS ARE INTERCHANGEABLE

NOTES:

1. General characteristic values are based on performance tests. These figures may change without notice as a result of additional data or product refinement. Consult the Varian Solid State East Division before using this information for final equipment design.
2. Special versions having lower noise figures can be supplied for operation over selected portions of the frequency ranges listed.
3. A bandwidth of 40 MHz is standard only for models having i-f center frequencies of 60 or 70 MHz.
4. Output impedances of 75 Ω or 93 Ω are available on special order.
5. Models which operate from a +20 Vdc, 10 mA supply are also available.
6. When ordering, add the i-f frequency, bandwidth, and output impedance desired to the basic model number, as shown in the example. Also specify whether a negative or positive 20 Vdc supply is desired.

varian
solid state division

TECHNICAL DATA

MIF-8394

MONOPULSE
I-F SUBSYSTEM

DESCRIPTION

The MIF-8394 is a solid-state, three-channel, "phase-type" i-f monopulse subsystem. It accepts i-f sum (Σ) and difference (Δ) azimuth and elevation information and converts it to angular azimuth and elevation information at video. In addition, an internal linear amplifier provides threshold information.

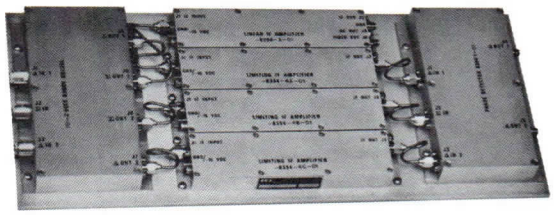

This subsystem can process signals from either phase-sensing or amplitude-sensing antennas. By adding the Σ and Δ signals in quadrature, the levels seen by the Δ channels, over the range of ±45 degrees from the boresight axis, never differ from the Σ channel level by more than 3 dB, thereby simplifying phase tracking. The MIF-8394 incorporates Varian ITLM limiters, which are virtually phase constant over a 70-dB dynamic range. Because of the small difference in level between the Σ and $\Sigma + j\Delta$ channels, the limiters produce typical phase deviations of less than 2 degrees. Two identical video output channels produce signals, with levels related to the received channels, that are described by cos (ϕ - 90°).

Special r-f and video processing subsystems can be furnished separately or matched to the MIF-8394 and supplied as a complete monopulse system. Modular construction and all-solid-state components assure high reliability and exceptionally uniform construction.

GENERAL CHARACTERISTICS [1]

Input Impedance, nom	50 Ω
Input Center Frequency	60 MHz
IF Bandwidth, at 3 dB, nom	15 MHz
Pulse Rise Time Response	70 ns
Pulse Width, Σ and Δ channel	100 ns to CW
Number of Input Channels	
Sum, Σ	1
Difference, Δ	2
Number of Output Channels	
Azimuth, Δ	1
Elevation, Δ	1
Linear Video	1
Linear D-C	1
Linear IF	1
Relationship of Input Sum and Difference Signals	Quadrature
Dynamic Range	-65 to -5 dBm
Phase Detector	
Characteristic, nom	cos (ϕ -90°)
Peak Output, nom	150 ± 20 mV
Load, min	1000 Ω
Linear Channel	
Gain, min	60 dB
Linear IF Output, max	10 dBm
Video Output	Positive pulse, AC Coupled, 1000 Ω load
D-C Output	DC Coupled, Internal Detector, 10,000 Ω load
Dimensions	See Outline Drawing
Weight, approx	6.25 lb
Connectors	
Signal	OSM
Power and DC Output	Filtercon
Supply Requirements	
Voltage	-15 Vdc
Current	600 mA
Temperature Range, oper	-40 to +70 °C

CHARACTERISTIC CURVE [1]

Typical performance values

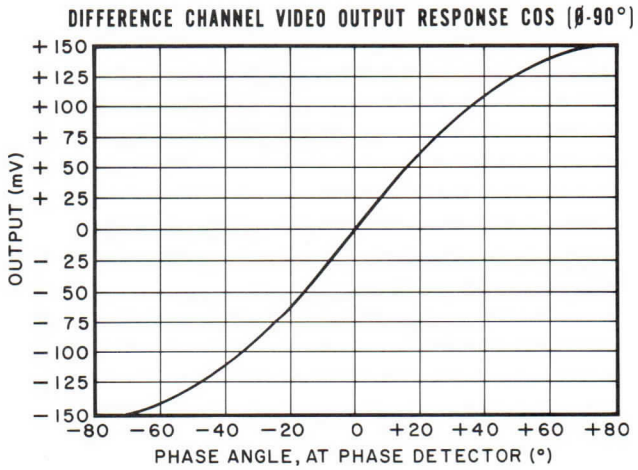

2913 10/72

Printed in U.S.A.

MIF-8394 BLOCK DIAGRAM

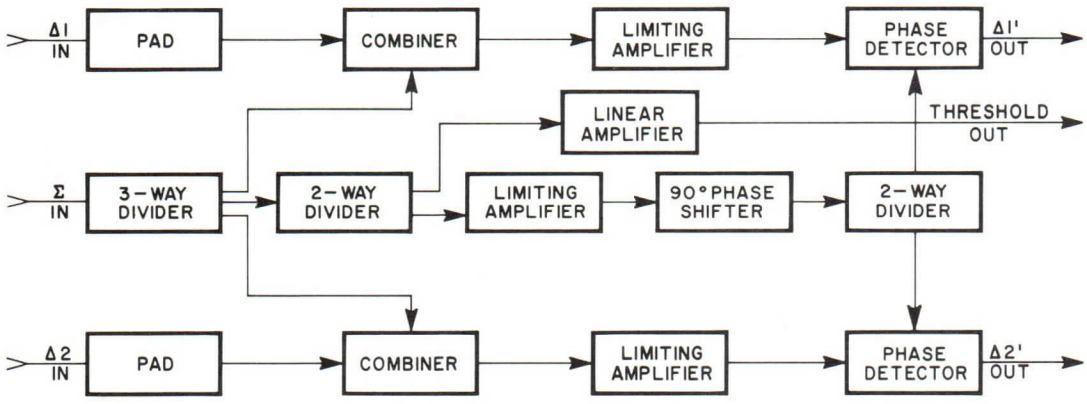

OUTLINE DRAWING

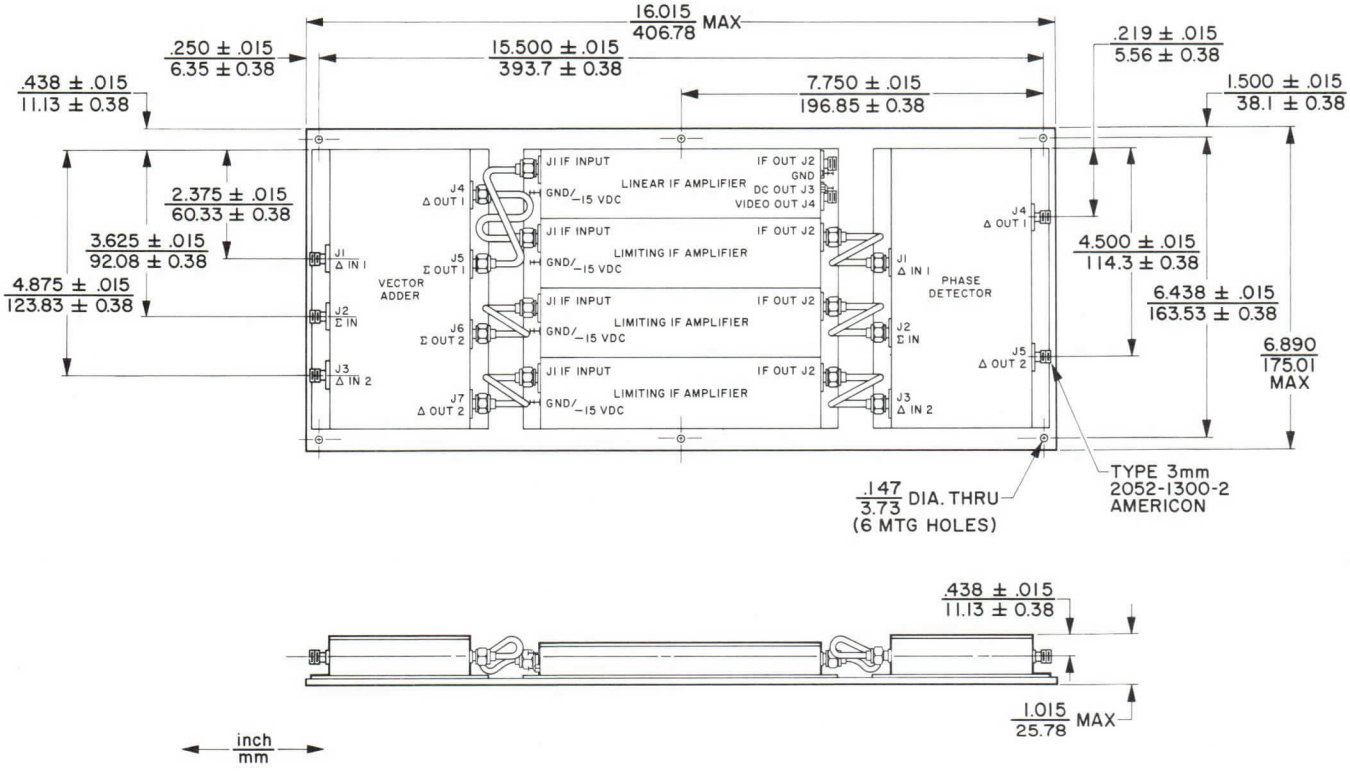

NOTE:

1. Characteristics and curves are based on performance tests. These values may change without notice as a result of additional data or product refinement. Varian should be consulted before using these data for equipment design.

INDUSTRIAL POWER PACKS AND WAVEGUIDE COMPONENTS

varian

TECHNICAL DATA

2040 Series

PRECISION ROTARY VANE ATTENUATORS

DESCRIPTION

Varian 2040 rotary attenuators are ideal for use in waveguide systems where broadband direct reading of attenuation is required and particularly as standards for reflectometer/swept systems.

These attenuators consist of two low SWR rectangular-to-circular transitions and a rotating circular waveguide center section. The three sections are fitted with high-stability, high-attenuation elements which assure close agreement of the attenuation to the theoretical law. The attenuation is directly related to the angular position of the attenuating element in the circular section (i.e., it follows the law 40 log sec θ) and is insensitive to frequency changes. Choking of the rotating joints is employed to minimize leakage. Sound mechanical design ensures instruments are free from backlash. A precision 10 turn, 3" diameter helical drum with scale provides extremely high resolution.

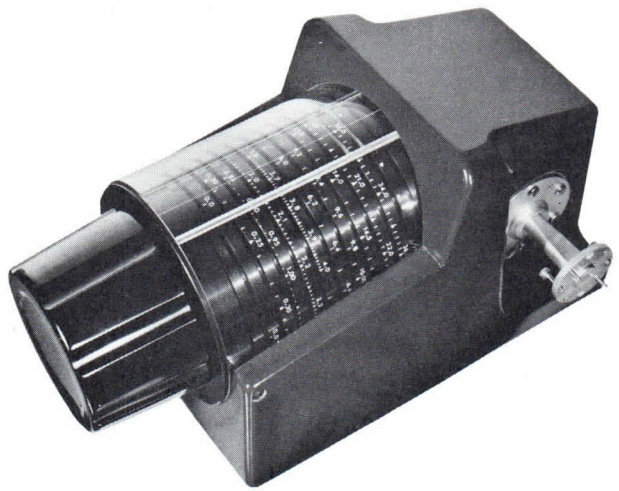

Attenuators can be supplied with attenuation ranges greater than 60 dB. They can also be furnished in a combination with a rotary phase-changer unit. These units are usually coupled at the circular waveguide section to minimize mismatch errors at low attenuation settings.

GENERAL CHARACTERISTICS[1]

Frequency (GHz)	Waveguide Choices			Maximum Insertion Loss (dB)	Maximum Power (W)	Maximum Phase Change Variation (°)	Flange-To-Flange Length (mm)	Model Number
	WG	R	WR					
17.6-26.7	20	220	42	0.8	1.0	3	225	VEK-2040K
26.4-40.1	22	320	28	1.0	0.7	3	150	VEQ-2040A
33.0-50.1	23	400	22	1.0	0.7	5	140	VEQ-2040Q
39.3-59.7	24	500	19	1.0	0.7	5	125	VEQ-2040W
49.9-75.8	25	620	15	1.0	0.5	5	100	VEE-2040E
60.5-92.0	26	740	12	1.5	0.3	5	80	VEE-2040R
73.8-112	27	900	10	1.5	0.3	6	80	VEB-2040B
92.3-140	28	1200	8	2.0	0.3	6	80	VEB-2040Z

3812 7/78

Printed in U.S.A.

GENERAL CHARACTERISTICS(continued)[1,2]

Attenuator Scale Range (dB)	Scale Increment (dB)
0-4	0.01
4-30	0.1
30-40	0.2
40-60	0.5

Attenuation Range[3] ..... 0-60 dB

Attenuation Accuracy,
the greater of ..... 0.1 dB
or
1 %

Maximum SWR 1.15:1

NOTES:

1. Characteristic values are based on performance tests. These figures may change without notice as a result of additional data or product refinement. Varian Associates of Canada Ltd. also reserves the right to withdraw any or all of these products without notice.
2. Outline dimensions, weights, and packaging information can be furnished on request.
3. Wider calibrated attenuation ranges can be provided on special order.

varian

TECHNICAL DATA

2041 Series

CALIBRATED GENERAL PURPOSE ATTENUATORS

DESCRIPTION

Varian 2041 series general-purpose, variable, waveguide attenuators provide a simple, convenient means of adjusting waveguide power level or isolating source and load. They consist of high-quality attenuating elements driven transversely across the waveguide section by a micrometer. The micrometer drive is free from backlash permitting excellent calibration accuracy. The elements are constructed from either nichrome on glass or nichrome on glass on glass fiber depending on the model. Unless otherwise specified, a calibration is provided at the center-band frequency. Calibrations at different frequencies can be provided at no extra cost.

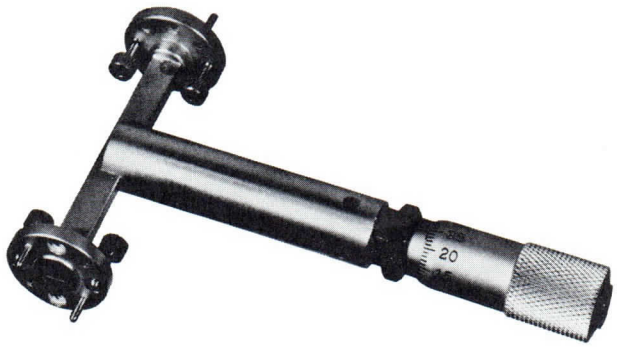

GENERAL CHARACTERISTICS[1]

Frequency Range (GHz)	Waveguide Choices			Calibrated Attenuation Range[2] (dB)	Calibration Accuracy (dB)	Maximum Insertion Loss (dB)	Maximum VSWR	Model Number
	WG	R	WR					
11.9-18.0	18	140	62	0-30	±0.2	0.3	1.07	VEU-2041U
17.6-26.7	20	220	42	0-30	±0.3	0.3	1.07	VEK-2041K
26.4-40.0	22	320	28	0-30	±0.3	0.3	1.07	VEQ-2041A
33.0-50.1	23	400	22	0-30	±0.4	0.4	1.07	VEQ-2041Q
39.3-59.7	24	500	19	0-30	±0.4	0.4	1.07	VEQ-2041W
49.9-75.8	25	620	15	0-30	±0.5	0.5	1.07	VEE-2041E
60.5-92.0	26	740	12	0-30	±0.5	0.5	1.07	VEE-2041R
73.8-110.0	27	900	10	0-30	±0.5	0.6	1.07	VEB-2041B
92.3-140.0	28	1200	8	0-30	±0.5	0.6	1.07	VEB-2041Z

NOTES:

1. Characteristic values are based on performance tests. These figures may change without notice as a result of additional data or product refinement. Varian Associates of Canada Ltd. also reserves the right to withdraw any or all of these products without notice.
2. Wider calibrated attenuation ranges can be provided on special order.
3. Outline dimensions, weights, and packaging information can be furnished on request.

3813 7/78

Printed in U.S.A.

LIGHT SENSING AND EMITTING DEVICES

varian

TECHNICAL DATA

R150-7C

XENON ARC LAMP HOLDER

FEATURES

- Small and sturdy — for optical instruments and portable equipment
- Balanced cooling — insures reliable long-life illuminator performance
- Rigid and vibration free — for the attachment of optical components
- Ozone-free operation — requires no external venting when equipped with a UV filter or with VIX-150F

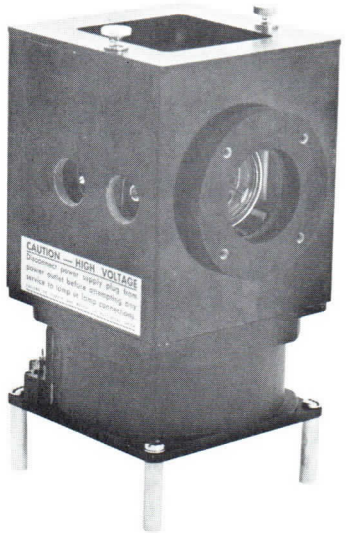

DESCRIPTION

The R150-7C is a lamp-holder for use with Varian VIX-150 series high-intensity xenon illuminators. This sturdy, compact unit is ideal for installation in portable equipment too small for standard quartz lamps. It consists of: a high-dielectric strength, non-metallic enclosure with removable top cover for easy lamp replacement; at 110 V (220 V optional), 50/60 Hz fan; heat sinks for cooling and terminals for electrical connections. Four equally spaced, threaded holes adjacent to the beam exit port permit the attachment of additional beam-forming optics, filters, or safety guards. Varian also offers optional accessories such as pyrex or quartz filters or lenses.

A 6-foot (1.83-meter) cable, detachable at the lamp holder, and with connections for a power supply, is included with the holder. An optional 11-foot (3.35-meter) cable can be furnished on special order.

GENERAL CHARACTERISTICS[1]

ELECTRICAL

Cooling Fan
- Operating Voltage ..... 105-125 Vac
- Operating Frequency ..... 50/60 Hz
- Power Consumption ..... 15 W

ENVIRONMENTAL

Ambient Temperature Range with
- Unrestricted Fan Intake ..... -20 to +55 °C

Altitude, max ..... 6000 ft/1.8 km

Mechanical Shock Resistance .... Meets Optical Instrument and Portable Equipment Requirements

PHYSICAL

Dimensions ..... See Outline Drawing

Weight ..... 2.2 lb (1 kg)

Mounting Surfaces[2] ..... Bottom or Side

Cooling
- Air Flow, at sea level and 25° C, nom ..... 10 ft³/min (4.72 l/s)
- Air Temperature Rise, at 150 W, max ..... 30 °C

Connectors[3]
- Illuminator Anode ..... Special HV Jack
- Illuminator Cathode ..... Special HV Socket
- AC Supply ..Mate with detachable power cable

3765 12/77

Printed in U.S.A.

OPTIONAL ACCESSORIES

The R150-7C lamp holder can be equipped with any of the following accessories on special orders. All items are factory installed prior to shipment.

ACCESSORY

Quartz Lens, f/3.5, 25 mm dia.
in mounting flange L151-2
Pyrex Filter, for
ozone-free operation F150-1
Quartz Filter, for
ozone-free operation F150-2

MATCHED POWER SUPPLIES

Power Supply
Current Regulated Model, for
laboratory use PS150-8
Commercial Model PS151-1

NOTES:

1. Characteristic values are based on performance tests. These figures may change without notice as the result of additional data or product refinement. Consult the Eimac Division, Illuminator Systems before using this information for final equipment design.

2. Although horizontal operation of the illuminator is recommended, satisfactory performance can be achieved with the illuminator in any position except where its beam axis is within 45° from vertical with the window up.

3. Mating connectors on power supply termination end of cable.

OUTLINE DRAWING

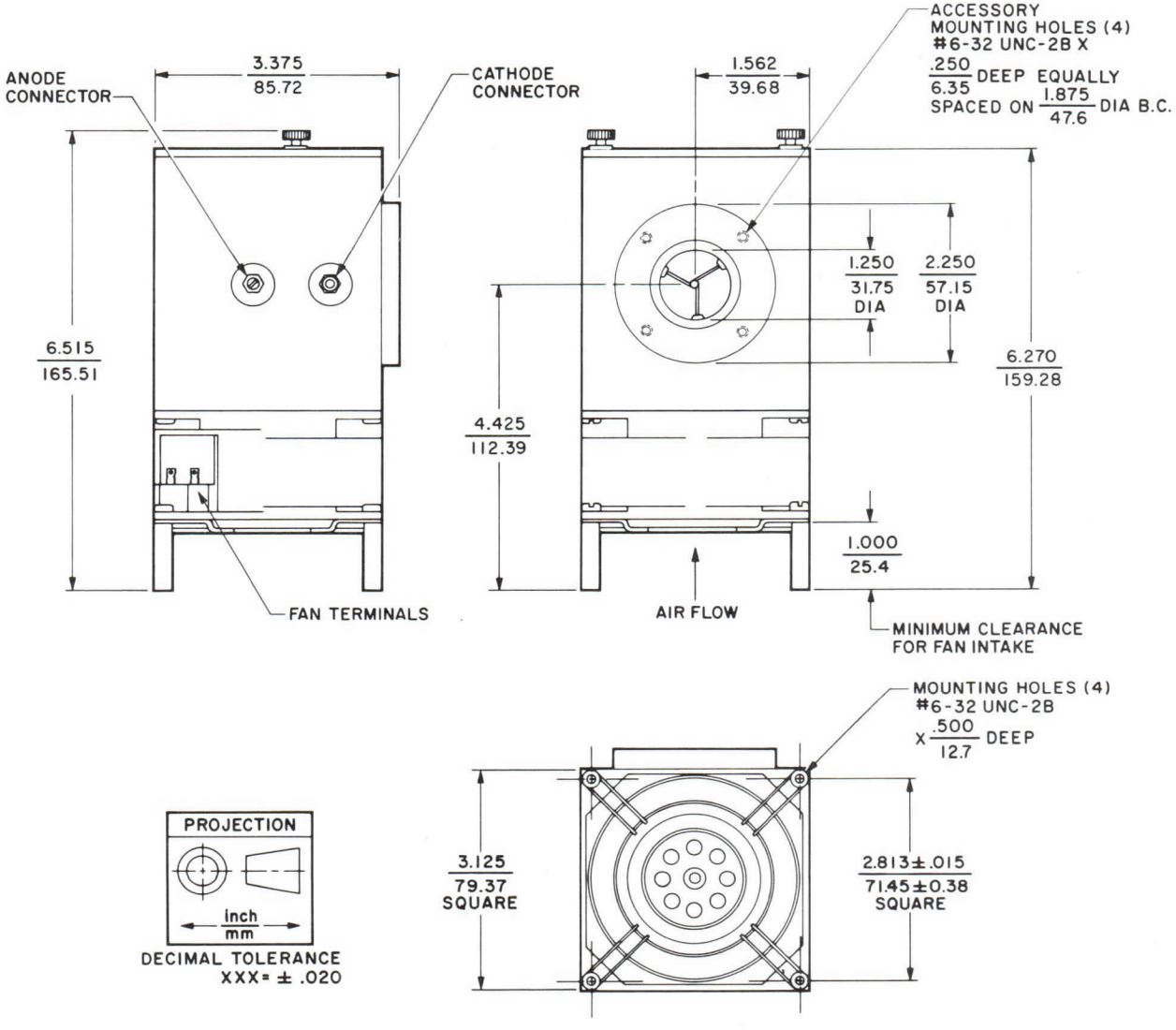

varian

TECHNICAL DATA

AVL300HXC-75

XENON ILLUMINATOR

300 W

FEATURES

- Compact source of high intensity illumination designed for A.V. use
- 4000 lumens or 16 watts visible radiation
- Long lamp life
- 16 mm 1500 lumens (or more) thru 70% shutter
- Ideal 5400°K color temperature

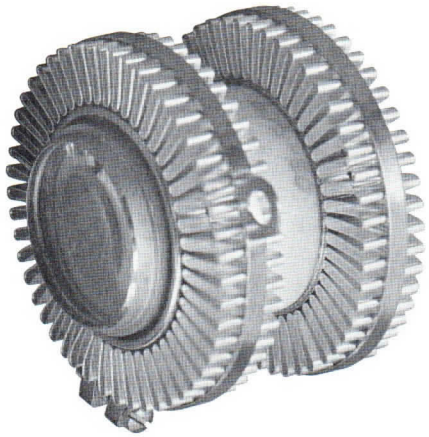

DESCRIPTION

The AVL300HXC-75 is a small, rugged, integral-reflector, high-pressure, short-arc xenon illuminator. It is a compact source of high-intensity illumination, ideal for Audio/Visual applications, including 8 mm, 16 mm, 35 mm, and other projection formats. This illuminator is also suitable for use as a spot or flood light.

The arc output is collected by an integral, deep, parabolic reflector and transmitted through a sapphire window. The factory prealigned optics make installation and replacement of the AVL300HXC-75 extremely simple.

Varian offers matched power supplies, holders, and optical accessories, as well as the knowledge and experience to assist the equipment designer to interface the illuminator with the projector or system.

GENERAL CHARACTERISTICS[1]

OPTICAL

	OPERATING TIME 10 HOURS	100 HOURS	1000 HOURS
Luminous Flux, typical[2]	5000	4000	2500 lm
Radiant Flux, typical[2]	60	48	30 W

ELECTRICAL

Input Power	300 W
Illuminator Voltage	13 Vdc
Illuminator Current	23 Adc
Starting Voltage[3]	15 kVdc

PHYSICAL

Dimensions	See Outline Drawing
Weight, approximate	6.5 oz/184 g
Operating Position, recommended[4]	Horizontal
Arc Spacing	1.1 mm
Reflector Surface	Silver Parabola

ENVIRONMENTAL

Shock, 1 ms all axes, non-operating	1000 G
Vibration, sinusoidal 30-2000 Hz	
Non-operating	50 G
Cooling[5]	Forced Air
Operating Temperature, ceramic-metal and window seals[5]	
Nominal, for optimum life	150 °C
Maximum	200 °C

RECOMMENDED POWER SUPPLY[3]

117 Vac, 60 Hz	AVP300FD
100-264 Vac, 50/60 Hz	AVP300FE

3731 9/77

Printed in U.S.A.

OUTLINE DRAWING [8]

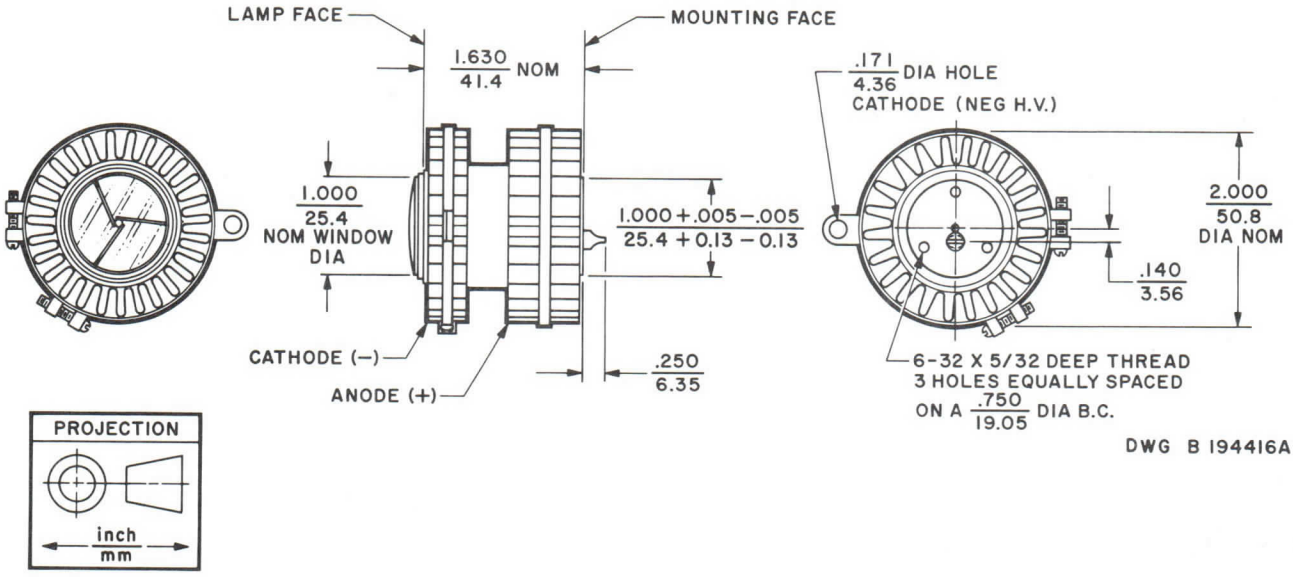

TYPICAL LAMP LAYOUT
Dimensions For A 16mm Projector

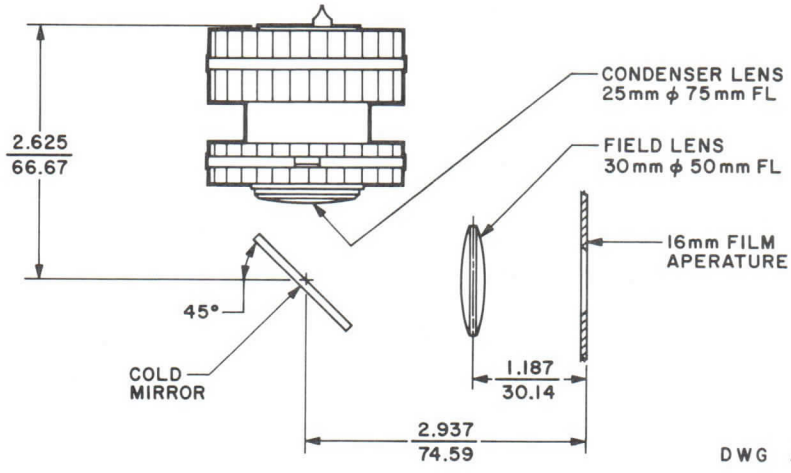

NOTES:

1. Characteristic values are based on performance tests with the lamp mounted horizontally. These figures may change without notice as the result of additional data or product refinement. Consult the Varian Eimac Division before using this information for final equipment design.

2. Total output at the window of the illuminator.

3. This illuminator requires special starting techniques. Conventional power-supply starters used with most short-arc lamps may damage the illuminator. The recommended Varian power supplies, with integral starters, are designed specifically for use with the AVL300HXC-75. Contact the Varian Eimac Division for the latest information on these and other recommended Varian power supplies.

4. Although the horizontal operating position is recommended, satisfactory performance can be achieved with the lamp in any position except where the lamp axis is within 45° from vertical with the window up.

5. Sufficient cooling must be provided to maintain the window and ceramic-metal seal temperatures at or below the temperatures specified. Varian offers lamp holder/fan assemblies designed especially for this purpose. If this illuminator is installed in existing equipment, additional airflow may be required.

6. Variations of this lamp are available as stock items or special orders. The AVL300H lamp is without the integral coolers, where bolt-on heatsinks are desired and adequate cooling is available. Other special features can be furnished, including tailored reflectors for special applications. Contact the Varian Eimac Division, Illuminator Systems for more information and for your special needs.

varian

PRELIMINARY
TECHNICAL DATA

R300-2

XENON ARC LAMP HOLDER

FEATURES

- Small and sturdy — for optical instruments and portable equipment
- Balanced cooling — insures reliable long-life illuminator performance
- Rigid and vibration free — for the attachment of optical components
- Ozone free operation — requires no external venting when lamp is equipped with a UV filter

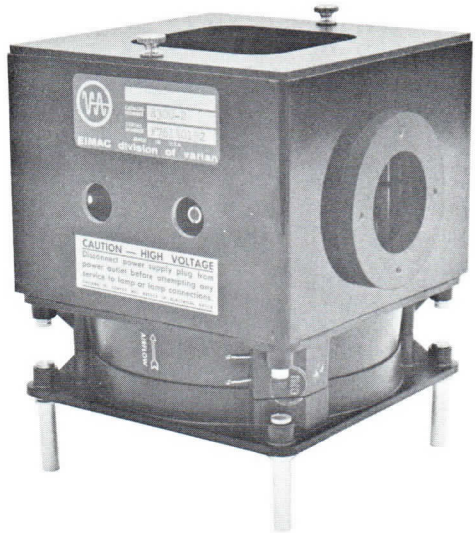

DESCRIPTION

The R300-2 lamp holder is for use with Varian VIX-300 high intensity xenon illuminators. This sturdy, compact unit is ideal for installation in portable equipment too small for standard quartz lamps. It consists of: a high-dielectric strength non-metallic enclosure with removable top cover for easy lamp replacement; a 110 volt, 50/60 Hz fan; heat sinks for cooling, and terminals for electrical connections. Four equally spaced threaded holes adjacent to the beam exit port permit the attachment of additional beam-forming optics, filters, or safety guards. Varian also offers optional accessories such as: pyrex or quartz filters or lenses.

A 6-foot (1.85-meter) detachable cable, including connectors which mate to the power supply and lamp holder, is included.

GENERAL CHARACTERISTICS [1]

ELECTRICAL

Cooling Fan:
- Operating Voltage ..... 105-125 Vac
- Operating Frequency ..... 50/60 Hz
- Power Consumption ..... 15 W

PHYSICAL

Ambient Temperature Range with Unrestricted Fan Intake ..... 20 to +55 °C

Altitude, maximum ..... 6000 ft/1.8 km

Mechanical Shock Resistance .... Meets Optical Instrument and Portable Equipment Requirements

ENVIRONMENTAL

Dimensions ..... See Outline Drawing

Weight ..... 4 lb/1.8 kg

Mounting Surfaces [2] ..... Bottom or Side

Cooling:
- Air Flow at sea level and 25° C,..... 10 ft^3/min (0.28 m^3/min)
- Air Temperature Rise, at 150 W, maximum ..... 30 °C

Connectors: [3]
- Illuminator Anode ..... Special HV Jack
- Illuminator Cathode ..... Special HV Socket
- AC Supply .. Mates with detachable power cable

3730 9/77

Printed in U.S.A.

OPTIONAL ACCESSORIES

The R300-2 lamp holder can be equipped with any of the following accessories on special order. All items are factory installed prior to shipment.

ACCESSORY	PART NUMBER
Quartz Lens, f/3.5, 25 mm dia. in mounting flange	L151-2
Pyrex Filter, for ozone-free operation	F150-1
Quartz Filter, for ozone-free operation	F150-2

MATCHED POWER SUPPLIES

Power Supply
- Current Regulated, Laboratory Use PS300-1
- Current Regulated, Commercial Use PS301-1

NOTES:

1. Characteristic values are based on performance tests. These figures may change without notice as the result of additional data or product refinement. Consult the Eimac Division, Illuminator Systems before using this information for final equipment design.
2. Although horizontal operation of the illuminator is recommended, satisfactory performance can be achieved with the illuminator in any position except where its beam axis is within 45° from vertical with the window up.
3. Mated connectors on power supply termination end of cable.

OUTLINE DRAWING

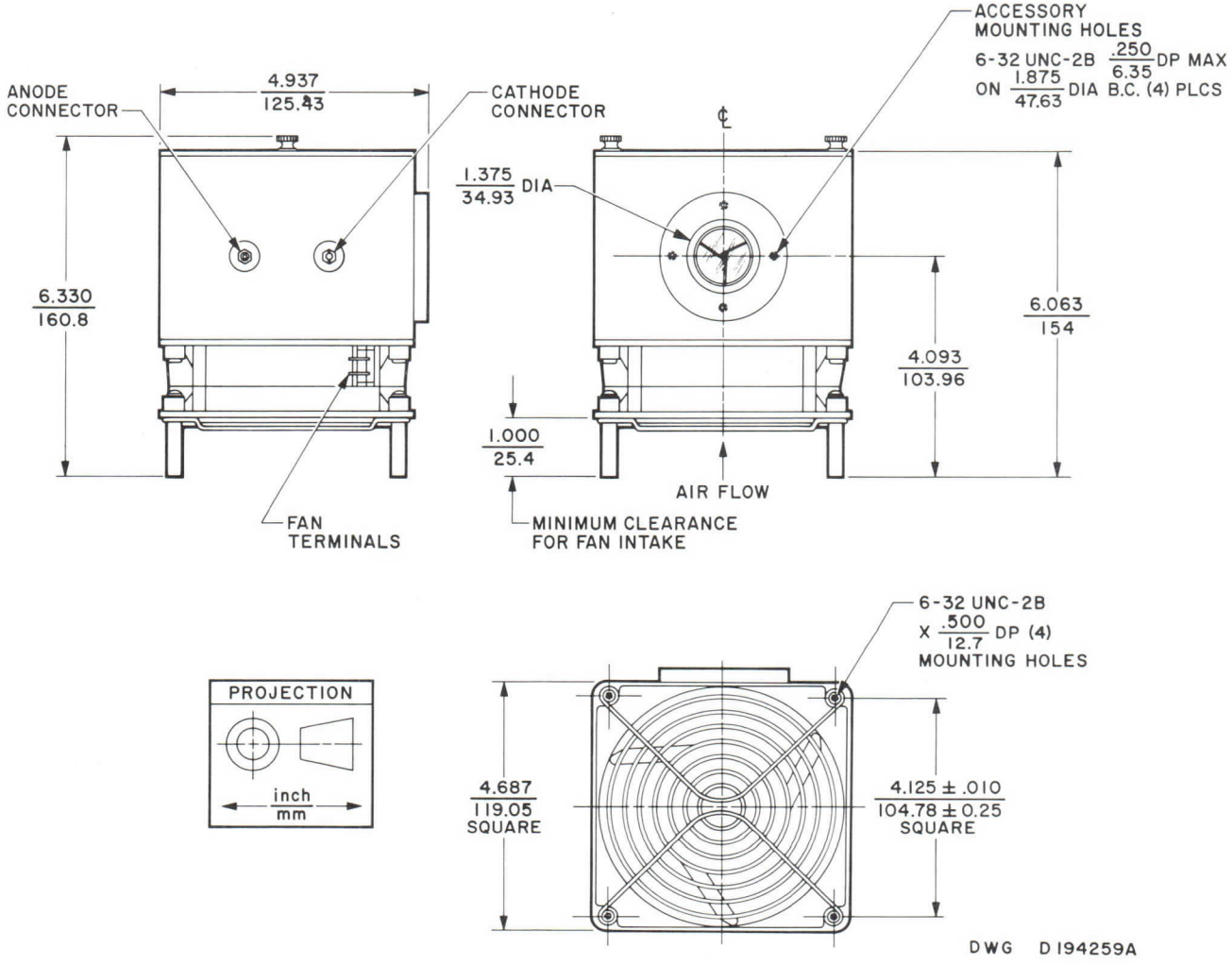

varian

PRELIMINARY
TECHNICAL DATA

VPM-159, VPM-164
Series

III-V 12-STAGE
UV TO NEAR IR
PHOTOMULTIPLIERS

FEATURES

- Solid State III-V photocathodes — three types
- High quantum efficiency (QE)
- Broad spectral response -- 145 to 1100 nm
- Computer-designed optics for high gain and low dark current
- Rugged, ultra-high-vacuum, metal-ceramic envelope
- Anode guard ring construction
- Integral voltage divider
- Precision vacuum encapsulation
- Operable in ambient environments from +20 to -195° C

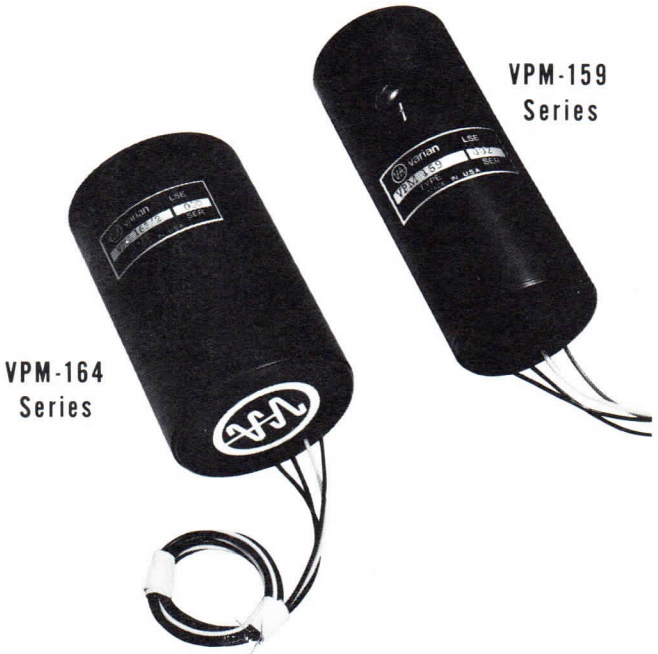

DESCRIPTION

The VPM-159 and VPM-164 series are III-V, 12-stage UV to near IR photomultipliers for use in astronomy, spectroscopy, high-resolution densitometry, photometry, spectrometry, scintillation counting, electro-optical countermeasures, multiple-wavelength laser detection up to 30 megahertz, and other low and very-low light-level detection applications.

The VPM-159 series are equipped with a one-half-inch diameter side window and the VPM-164 models employ three-quarter-inch end-window construction. Each window is synthetic sapphire (145 nanometer cutoff), aligned with its photocathode. Special windows having a cutoff of 112 nanometers can be furnished.

Photocathodes are state-of-the-art III-V InGaAsP (A series), GaAs (M series) or GaAsP (S series) front-surface emitters for broadband UV to IR radiation detection. Optional devices are available for X-ray detection.

The rugged metal-ceramic envelope incorporates a low-excess-noise, electron-optically-focused, beryllium-copper, venetian-blind dynode structure. For the ultimate in quantum efficiency and low dark current performance, the end-window (VPM-164) models can be furnished with a gallium phosphide (GaP) first dynode instead of beryllium copper (BeCu) to provide extremely high secondary emission ratios and improved gain statistics for counting use.

Biasing is simplified by the integrated voltage divider of precision, high-reliability resistors welded to the metal dynode flanges. For pulse detection, an optional R-C circuit is available to prevent undesirable voltage-divider loading.

A fiberglass housing and encapsulation material, matched to the application, seal the tube envelope completely to maintain a stable, low-leakage-current environment. Tube connections are made safely and easily by means of insulated flying leads or optional tube sockets. Optional RFI-EMI shields are also available.

Dark current and dark count rate can be decreased dramatically by operating these photomultipliers at reduced temperatures such as -20° C (thermoelectric cooling), -50° C (refrigeration cooling), -78° C (dry ice cooling), -100° C (regulated liquid nitrogen cooling), or, for lowest dark current, -195° C (submersion in liquid nitrogen) in a non-encapsulated configuration ideal for photon counting.

3631 2/77

Printed in U.S.A.

GENERAL CHARACTERISTICS [1,4]

ELECTRO-OPTICAL

Photocathode [2]
- Quantum Efficiency ..... See Figure 1

Anode Sensitivity, S_A
- at 10^5 gain ..... See Figure 2

Equivalent Noise Input, ENI
- at -78°C ..... See Figure 3

Anode Dark Current, I_d (Dark Noise), [3,5]
- at 10^5 current amplification ... See Figure 4

Excess Dynode Noise, at 10^5 gain
- BeCu ..... < 2 dB
- GaP ..... < 1 dB

Current Amplification (Gain, G) typical
- At -1300 Vdc ..... 10^4
- At -1700 Vdc ..... 10^5
- At -2400 Vdc ..... 10^6
- On Request ..... 10^7

Average Anode Current, max ..... 1 μA

Pulse Anode Current
- 1% duty, max ..... 100 μA
  - Rise Time, 10 to 90% ..... 10 ns
  - Decay Time, 10 to 90% ..... 20 ns

Modulation Bandwidth ..... 30 MHz

Maximum Operating Voltage
- VPM-159 series ..... -3000 Vdc
- VPM-164 series ..... -3500 Vdc

Voltage Divider Current Requirements, max
- at -2400 Vdc ..... 330 μA

PHYSICAL

Dimensions [6] ..... See Outline Drawings

Weight
- VPM-159 Series ..... 0.5 lb/227 g
- VPM-164 Series ..... 1.0 lb/454 g

Mounting Position ..... Any

Connection ..... Four Flying Leads

Materials
- Photocathode
  - VPM-159A & VPM-164A .. Indium Gallium Arsenide Phosphide
  - VPM-159M & VPM-164M Gallium Arsenide
  - VPM-159S & VPM-164S .. Gallium Arsenide Phosphide
- Window
  - Standard ..... Sapphire (No = 1.77)
  - Optional ... Magnesium Flouride, UV Grade Sapphire, Lithium Flouride, or Quartz
- Dynodes
  - Standard ..... BeCu Alloy
  - Optional, first dynode, VPM-164 Series, see Figure 5 .... GaP

ENVIRONMENTAL

Temperature Range, storage and operating [7]
- Standard Configuration ..... -78 to +20 °C
- Optional Configuration ..... -100 to +20 °C
- Unencapsulated ..... -195 to +20 °C

OPERATING HAZARDS

Read the following and take all necessary precautions to protect personnel. Safe operating conditions are the responsibility of the equipment designer and the user.

High Voltage. This tube operates at voltages which can be deadly. Equipment must be designed so personnel cannot come in contact with operating voltages. Enclose high-voltage circuits and terminals and provide fail-safe interlocking switch circuits to open the primary circuits of the power supply and to discharge high-voltage capacitors whenever access is required.

Equipment must be designed to fully safeguard all personnel from these hazards. Labels and caution notices must be provided on equipment and in manuals clearly warning of those hazards which cannot be avoided.

NOTES:

1. Characteristic values are typical and are based on performance tests. These figures may change without notice as the result of additional data or product refinement. Consult Varian LSE before using this information for final equipment design.
2. The InGaAsP photocathode can be tailored for individual applications to optimize quantum efficiency at a specific wavelength and ambient temperature between room temperature and -195°C. As an option, the long wavelength cutoff limit can be extended to 1150 nm.
3. Dark current is measured with zero photocathode illumination.
4. When ordering, specify quantum efficiency, wavelength, dark current and ambient temperature required.
5. Dark current performance is a function of photocathode material, envelope type, and ambient temperature. Achievable dark count rates range from less than one (1) to 100 counts per second, with the VPM-164S having the lowest count rate and the VPM-159A having the highest. As with anode dark current, dark count performance improves inversely with temperature.
6. Optional configurations are available. They include (1) smaller diameter housing, (2) housings with pins, (3) housings with pins and sockets (external voltage divider), (4) unencapsulated for -195°C operation (with or without voltage divider).
7. "M" and "S" photocathodes can be fabricated for higher temperature operation on request.

CHARACTERISTIC CURVES

Typical performance values

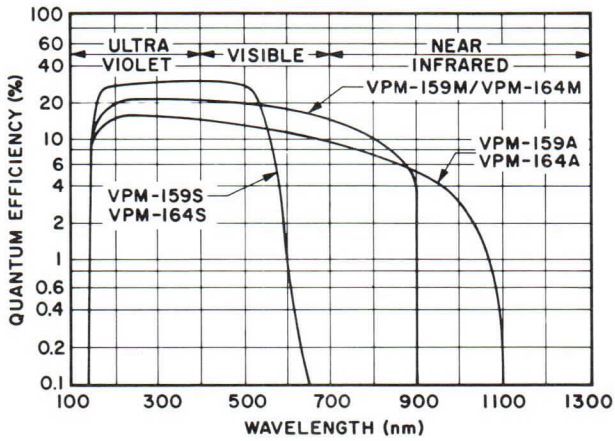

Figure 1

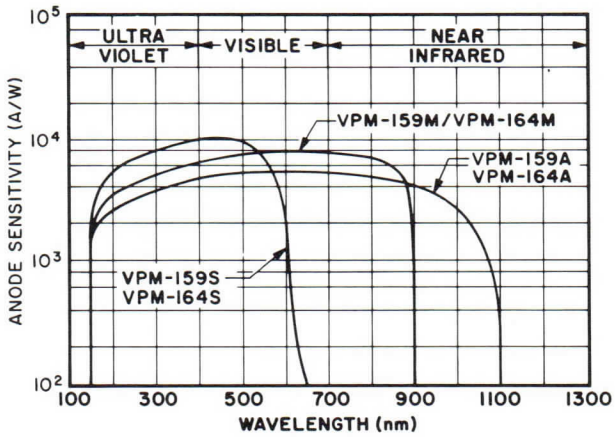

Figure 2

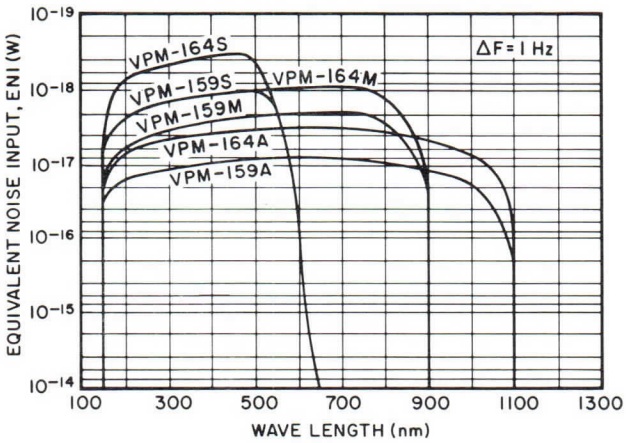

Figure 3

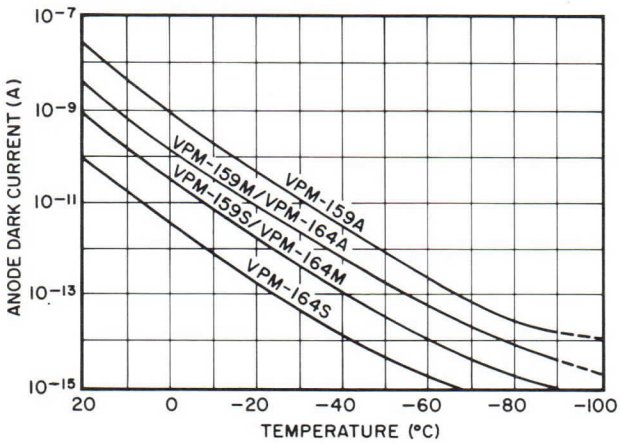

Figure 4

$$ENI = \frac{(2e\,Id\,\Delta f\,G)^{1/2}}{S_A}$$

WHERE

ENI = EQUIVALENT NOISE INPUT IN WATTS
e = ELECTRONIC CHARGE OF 1.6×10^{-19} COULOMBS
Id = ANODE DARK CURRENT AT GAIN G
Δf = 1 HERTZ BANDWIDTH, UNLESS OTHERWISE SPECIFIED
G = TUBE GAIN (CURRENT AMPLIFICATION)
S_A = ANODE SENSITIVITY AT GAIN G IN AMPERES/WATT

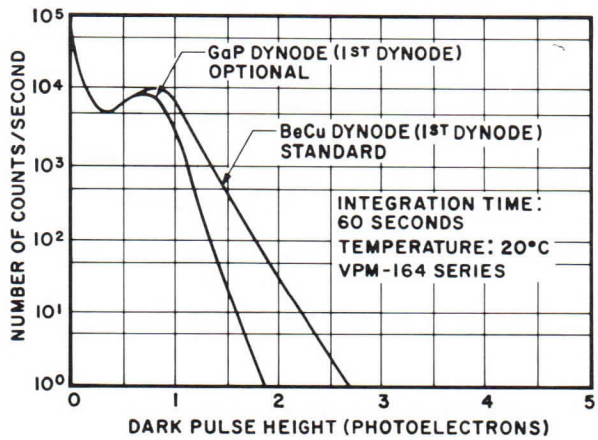

Figure 5

OUTLINE DRAWINGS

VPM-159 Series

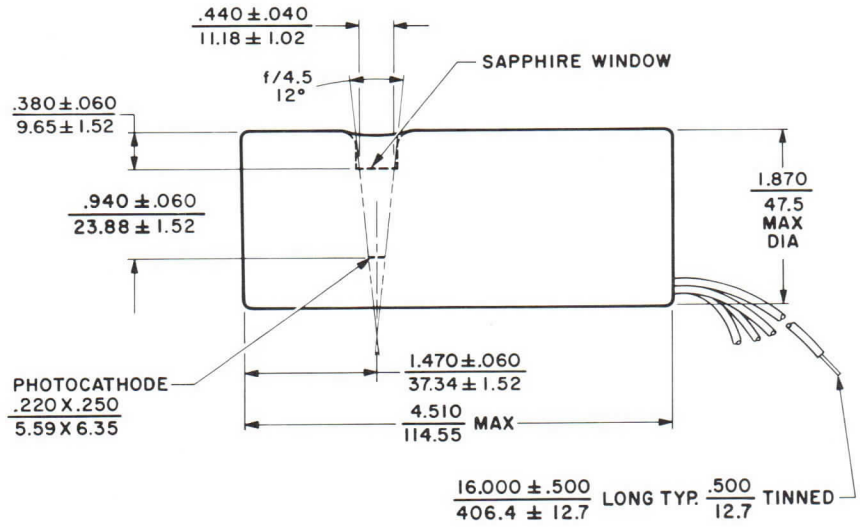

VPM-164 Series

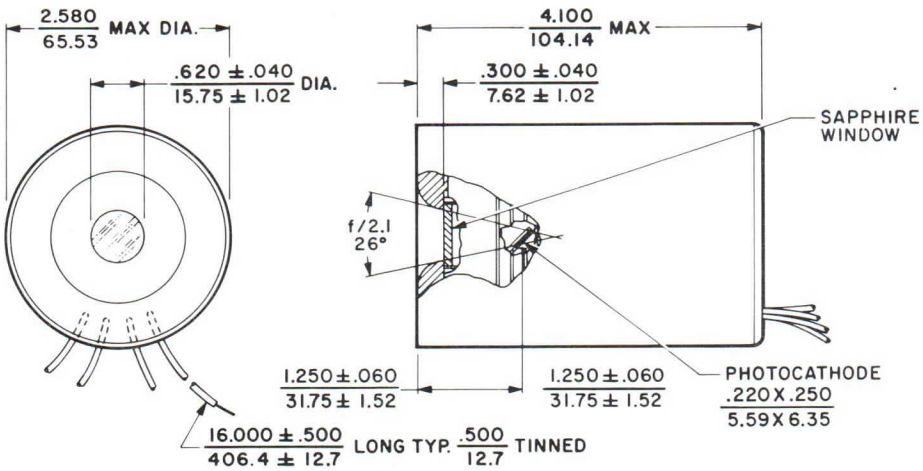

LEAD CONNECTIONS	
RED/BLACK	ANODE
WHITE/ORANGE	GUARD RING
BROWN/YELLOW	DIVIDER STRING
BLACK/	PHOTOCATHODE

DIMENSIONS: ← inch / mm →

MIXERS AND MODULATORS

MIXER-PREAMPLIFIERS

varian beverly

TECHNICAL DATA

V-8302B

ORTHOMODE® MICROWAVE MIXER

8.5-9.6 GHz

DESCRIPTION

The V-8302B ORTHOMODE X-band balanced mixer features low-noise performance in the 8.5 to 9.6 gigahertz range without adjustment. This mixer is for general X-band receiver use and is ideal for missile and airborne radar applications where difficult packaging problems are encountered. It may also be used as a balanced modulator. The unique design of this mixer saves space and weight in addition to providing sensitivity identical with that of conventional balanced mixers. Matched waveguide input design makes it suitable for use with a wide variety of local oscillators. Special caps permit crystal current monitoring without additional filtering and include convenient terminal lugs for circuit connections.

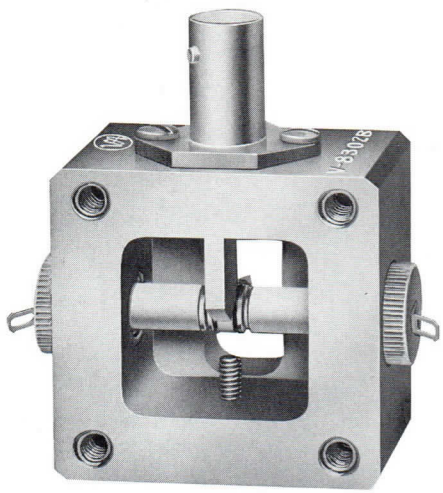

GENERAL CHARACTERISTICS [1]

ELECTRICAL

Frequency Range [2]	8.5-9.6 GHz
Noise Figure, maximum [3]	8.5 dB
Signal VSWR	
Typical	2.0:1
Maximum, at band edges	2.5:1
L-O Input VSWR	
Typical	2.0:1
Maximum, at band edges	2.5:1
L-O Power Required, typical	2 mW
L-O Rejection in Signal Arm	
Typical	20 dB
Minimum, at band edges	15 dB
I-F Output Impedance, nominal [4]	150 Ω
I-F Range	10-120 MHz
Crystals, matched pair	D4160MR or Equivalent

PHYSICAL

Dimensions	See Outline Drawing
Weight, typical	3 oz
Connectors	
Signal Input	Mates with UG-39/U
L-O Input	Mates with UG-39/U
I-F Output [5]	BNC
Crystal Current Output [6]	Filtered Output At Terminal Lugs On Crystal Caps

NOTES:

1. Characteristic values are based on performance tests. These figures may change without notice as a result of additional data or product refinement. Contact Varian Beverly, Beverly, Massachusetts before using this information for final equipment design.
2. Units can be built at specific bands in the overall frequency range of 8.5 to 9.6 GHz per customer requirements.
3. Noise figure includes 3-dB image-frequency contribution and 1.5-dB, 30-MHz IF.
4. At a capacitance of 10 pF.
5. Other I-F Output Connectors can be supplied to meet customer requirements. If no special connector is ordered, the connector will be a BNC jack as specified above.
6. Crystal current can be measured using the current monitoring system shown on the back of this sheet.

3144 1/74

Printed in U.S.A.

CRYSTAL CURRENT MONITORING SYSTEM

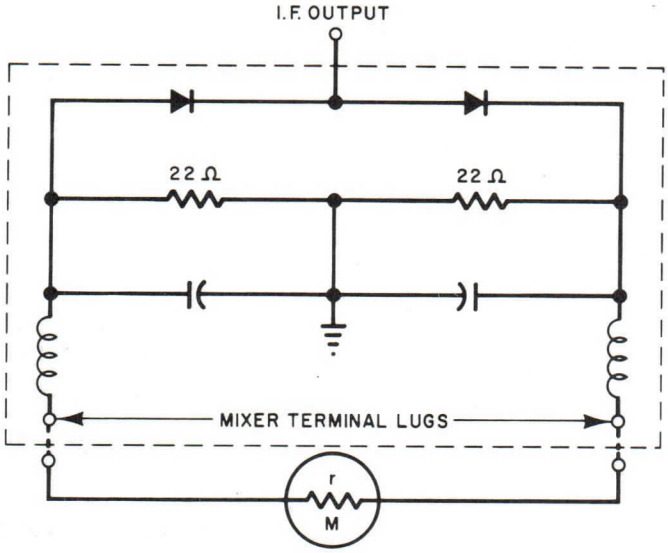

CRYSTAL CURRENT = $\left(1+\frac{r}{44}\right)$ X METER READING

M=0–1mA METER HAVING AN INTERNAL RESISTANCE, OF 50 OHMS.
MOVEMENT WILL READ APPROXIMATELY HALF TOTAL CRYSTAL CURRENT.

OUTLINE DRAWING

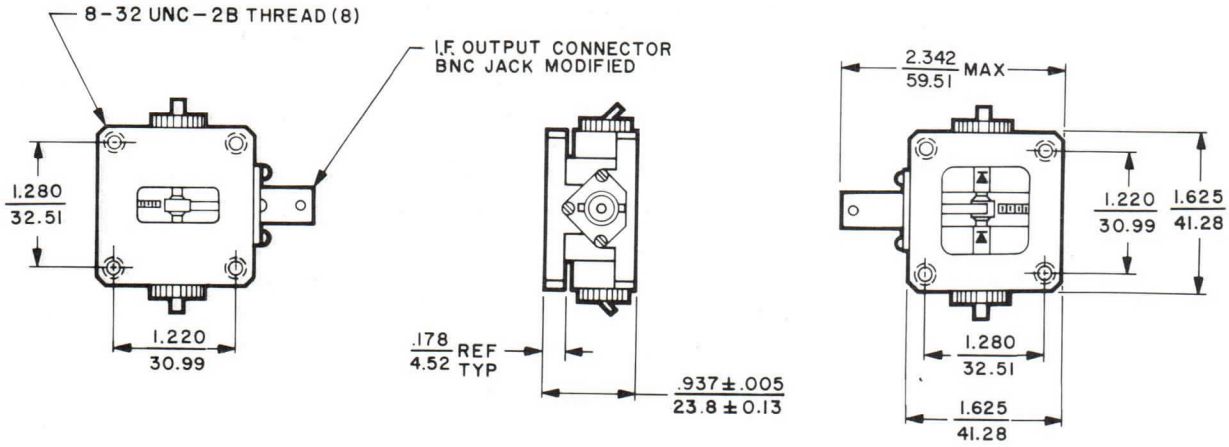

varian beverly

TECHNICAL DATA

V-8303 Series ORTHOMODE® MICROWAVE MIXERS 5.4-7.2 GHz

DESCRIPTION

V-8303 ORTHOMODE J-band balanced mixers feature low-noise performance without adjustment. They are intended for general J-band receiver use and are ideal for missile and airborne applications where difficult packaging problems are encountered. They may also be used as balanced modulators. The unique design of these mixers saves space and weight in addition to providing sensitivity identical with that of conventional balanced mixers. Matched waveguide input makes them suitable for use with a wide variety of local oscillators. Special caps permit crystal current monitoring without additional filtering and include convenient terminal lugs for circuit connections.

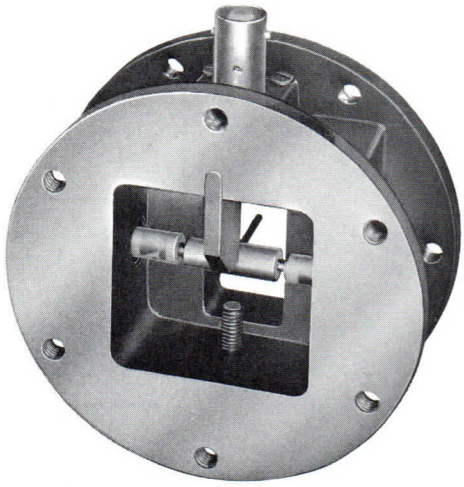

GENERAL CHARACTERISTICS[1]

ELECTRICAL

Frequency Range[2]	
V-8303B	5.85-7.20 GHz
V-8303C	5.40-6.60 GHz
Noise Figure, maximum[3]	8.5 dB
Signal Input VSWR	
Typical	2.0:1
Maximum, at band edges	2.5:1
L-O Input VSWR	
Typical	2.0:1
Maximum, at band edges	2.5:1
L-O Power Required, nominal	2 mW
L-O Rejection in Signal Arm, min.	20 dB
I-F Output Impedance, nominal[4]	150 Ω
I-F Range	10-120 MHz
Crystals, matched pair	1N415EMR or Equivalent

PHYSICAL

Dimensions	See Outline Drawing
Weight, approximate	7 oz
Connectors	
Signal Input	Mates with UG-344/U
L-O Input	Mates with UG-344/U
I-F Output[5]	BNC
Crystal Current Output[6]	Filtered Output At Terminal Lugs Crystal Caps

NOTES:

1. Characteristic values are based on performance tests. These figures may change without notice as a result of additional data or product refinement. Contact Varian Beverly, Beverly, Massachusetts before using this information for final equipment design.
2. Units can be furnished at specific bands within the frequency range of 5.4 to 7.2 GHz per customer requirements.
3. Noise figure includes 3-dB image-frequency contribution and 1.5-dB, 30-MHz IF.
4. At a capacitance of 10 pF.
5. Other I-F Output Connectors can be supplied to meet customer requirements. If no special connector is ordered, the connector will be a BNC jack, which mates with a UG-88/U BNC plug.
6. Crystal current can be measured using the current monitoring system shown on the back of this sheet.

3145 1/74

Printed in U.S.A.

CRYSTAL CURRENT MONITORING SYSTEM

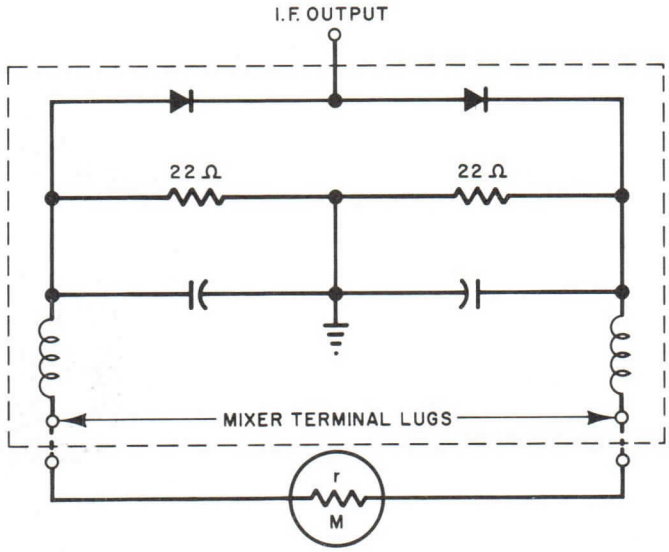

CRYSTAL CURRENT = $\left(1+\frac{r}{44}\right)$ X METER READING

M=0–1mA METER HAVING AN INTERNAL RESISTANCE, OF 50 OHMS.
MOVEMENT WILL READ APPROXIMATELY HALF TOTAL CRYSTAL CURRENT.

OUTLINE DRAWING

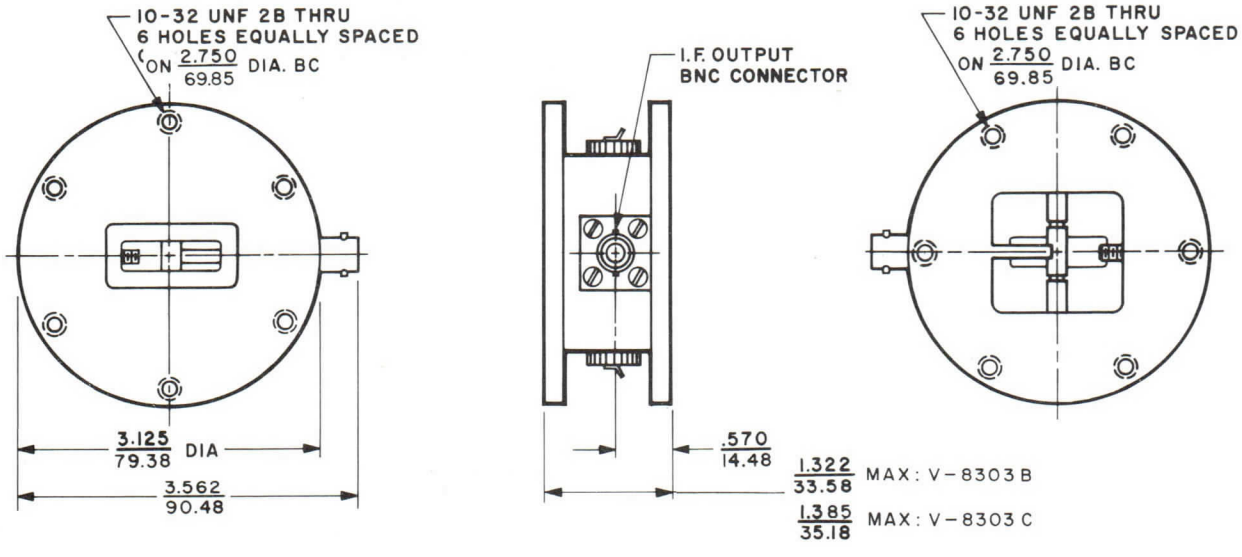

SIGNAL PORT

PROJECTION
inch
mm

LOCAL OSCILLATOR PORT

varian beverly

TECHNICAL DATA

V-8306
Series

ORTHOMODE ® MICROWAVE MIXERS

7.0 - 8.5 GHz

DESCRIPTION

V-8306 ORTHOMODE H-band balanced mixers feature reliable low-noise performance without adjustment. They are intended for general H-band receiver use and are ideal for missile and airborne applications where difficult packaging problems are encountered. They may also be used as balanced modulators. The unique design of these mixers saves space and weight in addition to providing sensitivity identical with that of conventional balanced mixers. Matched waveguide input makes them suitable for use with a wide variety of local oscillators. Special caps permit crystal current monitoring without additional filtering and include convenient terminal lugs for circuit connections.

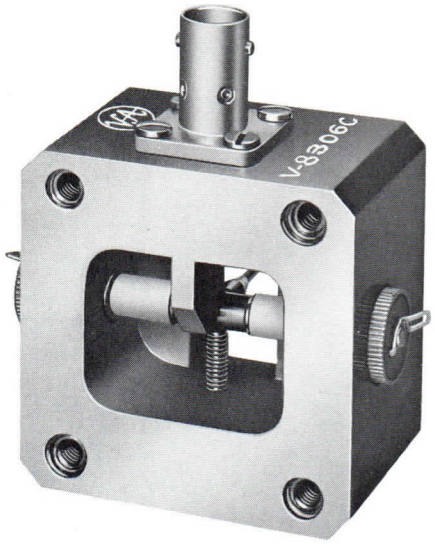

GENERAL CHARACTERISTICS [1]

ELECTRICAL

Frequency Ranges [2]	
V-8306C	7.0-8.0 GHz
V-8306B	7.5-8.5 GHz
Noise Figure, maximum [3]	8.0 dB
Signal Input VSWR	
Typical	2.0:1
Maximum, at band edges	2.5:1
L-O Input VSWR	
Typical	2.0:1
Maximum, at band edges	2.5:1
L-O Power Required, nominal	2 mW
L-O Rejection in Signal Arm, min	20 dB
I-F Output Impedance, nominal [4]	100 Ω
I-F Range	10-120 MHz
Crystals, matched pair	1N415EMR or Equivalent

PHYSICAL

Dimensions	See Outline Drawing
Weight, approximate	5 oz
Connectors	
Signal Input	Mates with UG-51/U
L-O Input	Mates with UG-51/U
I-F Output [5]	BNC
Crystal Current Output [6]	Filtered Output At Terminal Lugs On Crystal Caps

NOTES:

1. Characteristic values are based on performance tests. These figures may change without notice as a result of additional data or product refinement. Contact Varian Beverly, Beverly, Massachusetts before using this information for final equipment design.
2. Units can be furnished at specific bands within the frequency range of 7.0 to 8.5 GHz per customer requirements.
3. Noise figure includes 3-dB image-frequency contribution and 1.5-dB, 30-MHz I-F.
4. At a capacitance of 10 pF.
5. Other I-F Output Connectors can be supplied to meet customer requirements. If no special connector is ordered, this connector will be a BNC jack, which mates with a UG-88/U BNC plug.
6. Crystal current can be measured using the current monitoring system shown on the back of this sheet.

3146 1/74

Printed in U.S.A.

CRYSTAL CURRENT MONITORING SYSTEM

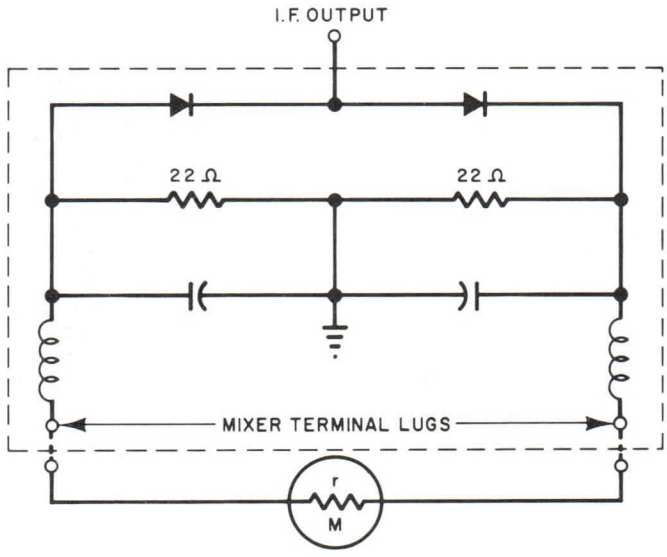

CRYSTAL CURRENT = $\left(1+\frac{r}{44}\right)$ X METER READING

M=0–1mA METER HAVING AN INTERNAL RESISTANCE, OF 50 OHMS.
MOVEMENT WILL READ APPROXIMATELY HALF TOTAL CRYSTAL CURRENT.

OUTLINE DRAWING

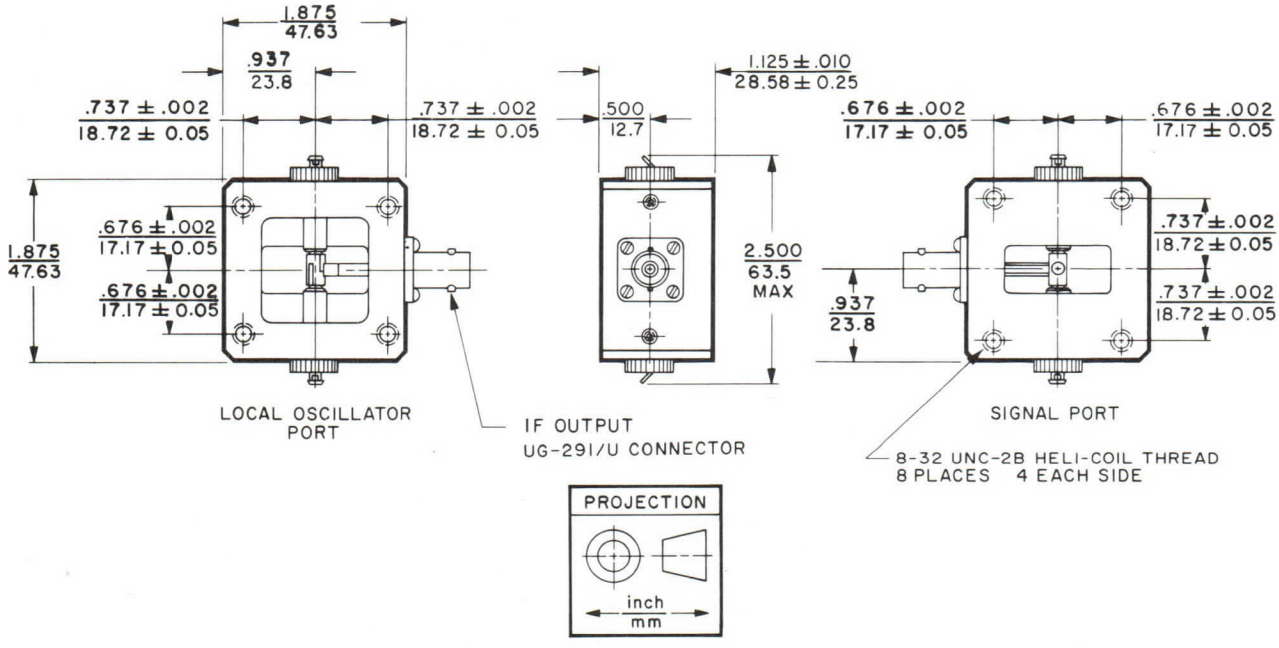

varian beverly

TECHNICAL DATA

V-8308B

ORTHOMODE® MICROWAVE MIXER

9.6-10.4 GHz

DESCRIPTION

The V-8308B ORTHOMODE X-band balanced mixer features reliable low-noise performance without adjustment. It is intended for general X-band receiver use and is ideal for missile and airborne applications where difficult packaging problems are encountered. It may also be used as a balanced modulator. The unique design of this mixer saves space and weight in addition to providing sensitivity identical with that of conventional balanced mixers. Matched waveguide input makes it suitable for use with a wide variety of local oscillators. Special caps permit crystal current monitoring without additional filtering and include convenient terminal lugs for circuit connections.

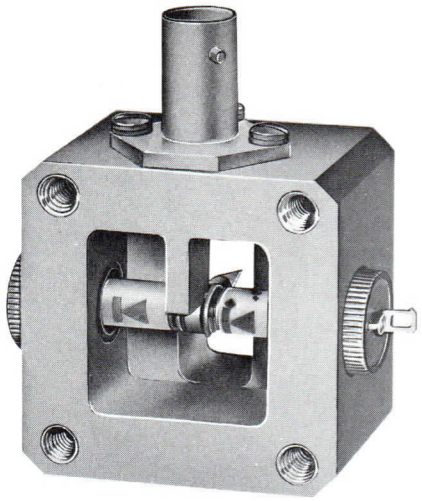

GENERAL CHARACTERISTICS [1]

ELECTRICAL

Frequency Range	9.6-10.4 GHz
Noise Figure, maximum [2]	9 dB
Signal Input VSWR	
Typical	2.0:1
Maximum, at band edges	2.5:1
L-O Input VSWR	
Typical	2.0:1
Maximum, at band edges	2.5:1
L-O Power Required, nominal	2 mW
L-O Rejection in Signal Arm, min.	20 dB
I-F Output Impedance, nominal [3]	200 Ω
I-F Range	10-120 MHz
Crystals, matched pair	D4160MR or Equivalent

PHYSICAL

Dimensions	See Outline Drawing.
Weight, approximate	2.5 oz
Connectors	
Signal Input	Mates with UG-39/U
L-O Input	Mates with UG-39/U
I-F Output [4]	BNC
Crystal Current Output [5]	Filtered Output At Terminal Lugs On Crystal Caps

NOTES:

1. Characteristic values are based on performance tests. These figures may change without notice as a result of additional data or product refinement. Contact Varian Beverly, Beverly, Massachusetts before using this information for final equipment design.
2. Noise figure includes 3-dB image-frequency contribution and 1.5-dB, 30-MHz IF.
3. At a capacitance of 10 pF.
4. Other I-F Output Connectors can be supplied to meet customer requirements. If no special connector is ordered, the connector will be a BNC jack, which mates with a UG-88/U BNC plug.
5. Crystal current can be measured using the current monitoring system shown on the back of this sheet.

3147 1/74

Printed in U.S.A.

CRYSTAL CURRENT MONITORING SYSTEM

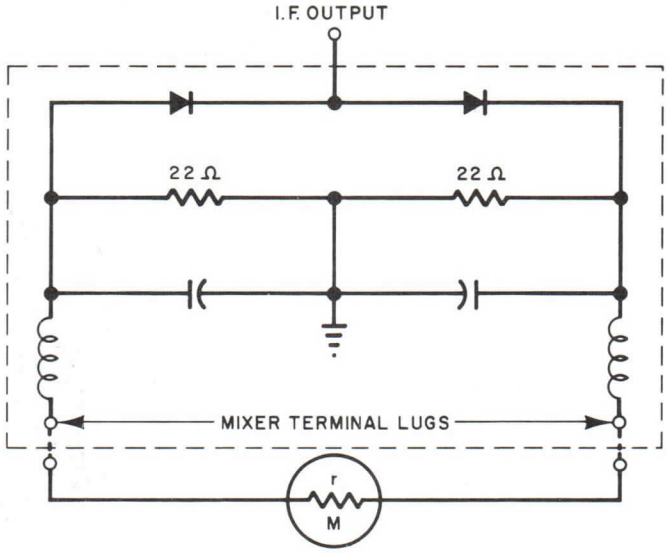

CRYSTAL CURRENT = $\left(1+\frac{r}{44}\right)$ X METER READING

M=0–1mA METER HAVING AN INTERNAL RESISTANCE OF 50 OHMS.
MOVEMENT WILL READ APPROXIMATELY HALF TOTAL CRYSTAL CURRENT.

OUTLINE DRAWING

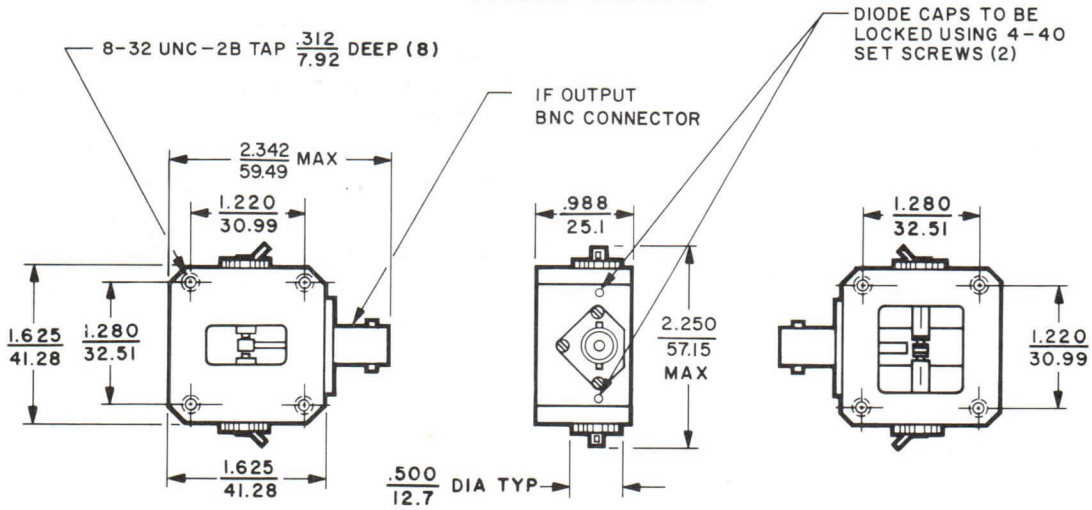

varian beverly

TECHNICAL DATA

V-8309
Series
ORTHOMODE ®
MICROWAVE MIXER
3.85-5.90 GHz

DESCRIPTION

V-8309 ORTHOMODE C-band balanced mixers feature low-noise performance in the 3.85 to 5.9 gigahertz range without adjustment. These small, lightweight mixers are for general C-band receiver use and are also ideal for missile and airborne radar applications where difficult packaging problems are encountered. The unique design of these mixers saves space and weight in addition to providing sensitivity identical with that of conventional balanced mixers. Special caps permit crystal-current monitoring without additional filtering and include convenient terminal lugs for circuit connections.

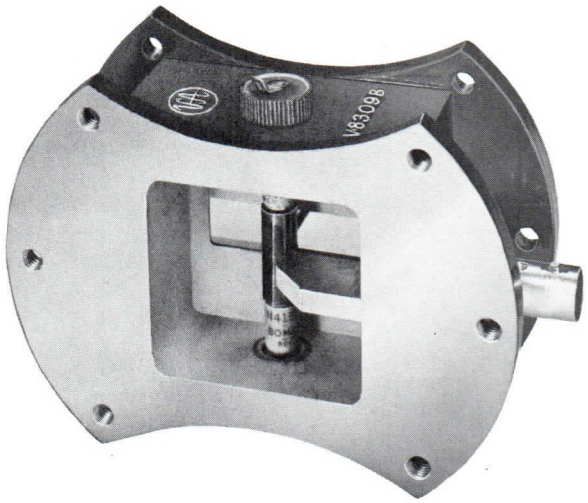

GENERAL CHARACTERISTICS [1]

ELECTRICAL

Frequency Range [2]	
V-8309A	3.85-4.50 GHz
V-8309B	4.40-5.00 GHz
V-8309C	4.90-5.90 GHz
Noise Figure, maximum [3]	8.0 dB
Signal Input VSWR	
Typical	2.0:1
Maximum, at band edges	2.5:1
L-O Input VSWR	
Typical	2.0:1
Maximum, at band edges	2.5:1
L-O Power Required, nominal	2 mW
L-O Rejection in Signal Arm, min	20 dB
I-F Output Impedance, nominal [4]	150 Ω
I-F Range	10-120 MHz
Crystals	1N415EMR or Equivalent

PHYSICAL

Dimensions	See Outline Drawing
Weight, approximate	9 oz
Connectors	
Signal Input	UG-149/U
L-O Input	UG-149/U
I-F Output [5]	BNC
Crystal Current Output [6]	Filtered Output At Terminal Lugs on Crystal Caps

NOTES:

1. Characteristic values are based on performance tests. These figures may change without notice as a result of additional data or product refinement. Contact Varian Beverly, Beverly, Massachusetts before using this information for final equipment design.
2. Units can be furnished at specific bands within the frequency range of 3.85 to 5.9 GHz per customer requirements.
3. Noise figure includes 3-dB image-frequency contribution and 1.5-dB, 30-MHz IF.
4. At a capacitance of 10 pF.
5. Other I-F Output Connectors can be supplied to meet customer requirements. If no special connector is ordered, the connector will be a BNC jack, which mates with a UG-88/U BNC plug.
6. Crystal current can be measured using the current monitoring system shown on the back of this sheet.

3148 1/74

Printed in U.S.A.

CRYSTAL MONITORING SYSTEM

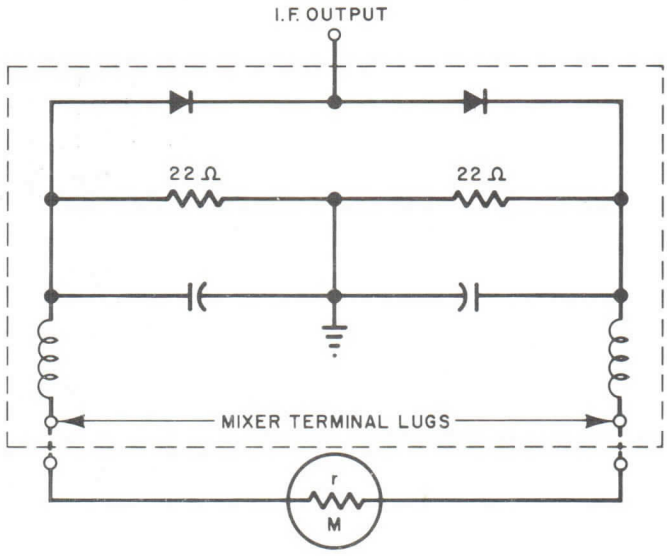

CRYSTAL CURRENT = $\left(1+\frac{r}{44}\right)$ X METER READING

M=0–1mA METER HAVING AN INTERNAL RESISTANCE OF 50 OHMS.
MOVEMENT WILL READ APPROXIMATELY HALF TOTAL CRYSTAL CURRENT.

OUTLINE DRAWING

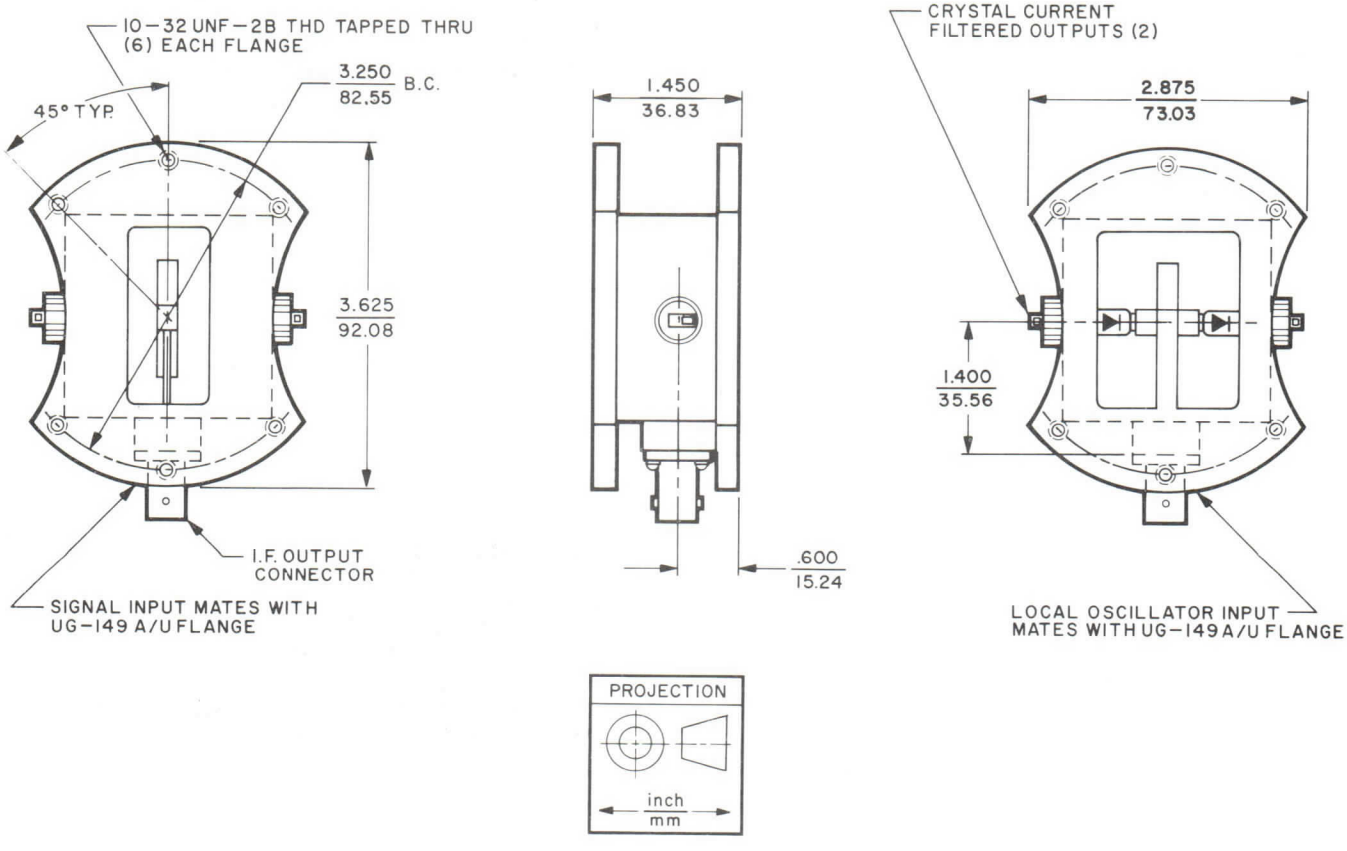

varian

TECHNICAL DATA

V-8314
Series
ORTHOSPAN* BALANCED MIXERS
12.4-18.0 GHz

DESCRIPTION

V-8314 ORTHOSPAN balanced mixers are Ku-band mixers for general receiver use. They are ideal for use in missile and airborne radars where difficult packaging problems are encountered. Standard models can be furnished for optimum operation over either a specified 1-gigahertz range in Ku band or over the entire Ku-band frequency range of 12.4 to 18.0 gigahertz. Low noise versions are available at a modest increase in cost. The unique design of these mixers saves space and weight in addition to providing sensitivity identical with that of conventional balanced mixers. Because of matched waveguide input, V-8314 mixers can be used with a wide variety of local oscillators.

GENERAL CHARACTERISTICS[1]

ELECTRICAL

Frequency Range, Ku band[2]	12.4 to 18.0 GHz
Signal Input VSWR, max	
Full Ku Band	3:1
1 GHz Band in Ku Band	2.5:1
L.O. VSWR, max	
Full Ku Band	4:1
1 GHz Band in Ku Band	2.5:1
Noise Figure[3], max	9.5 dB
L.O. Power Required, approx	2-4 mW
L.O. Rejection in Signal Arm, min.	15 dB
IF Output Impedance, nom	150 Ω
IF Capacitance, nom	10 pF
IF Frequency	2-120 MHz
Crystals, matched pair[3]	1N78DMR

MECHANICAL

Dimensions	See Outline Drawing
Weight, approx	5 oz/ 142 g
Mounting Position	Any
Connectors	
Signal Input	Mates with UG-419/U
L.O. Input	Mates with UG-419/U
IF Output[4]	SMA-3mm
Filtered Crystal Current Output	Optional

OUTLINE DRAWING

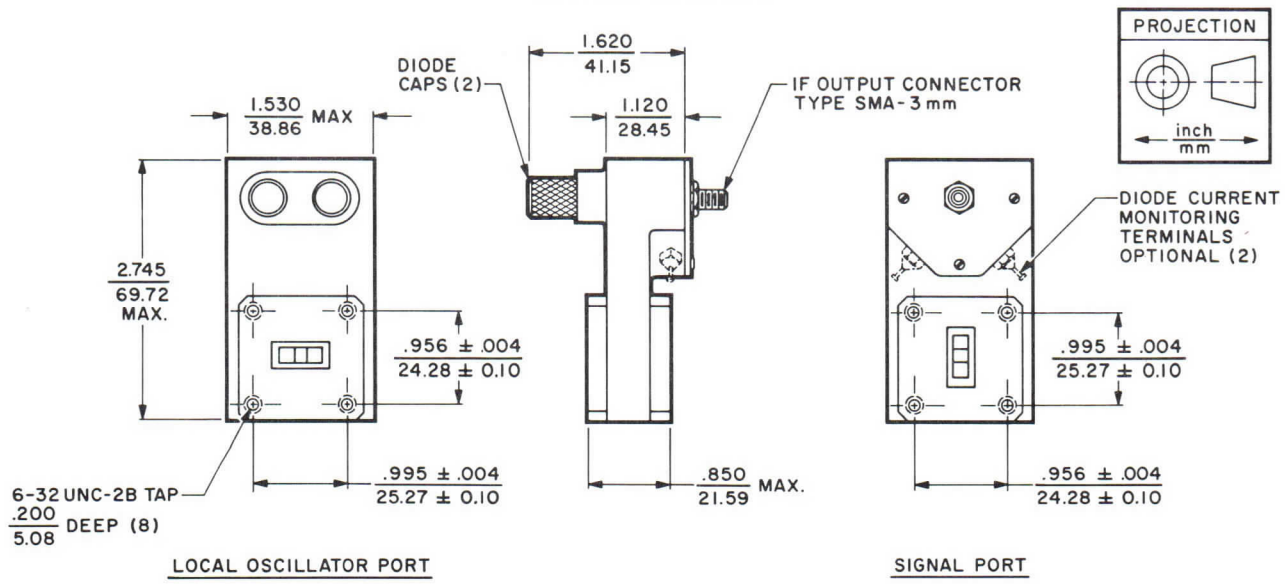

* *TM—Varian Associates*

3587 12/76

Printed in U.S.A.

NOTES:

1. Characteristic values are based on performance tests. These figures may change without notice as a result of additional data or product refinement. Verify these values with your local Varian Sales Office or the Varian Beverly Division before using them for equipment design.

2. Each mixer can be optimized for operation over either a 1-GHz band between 12.4 and 18.0 GHz or over the entire Ku band. Specify the desired operating frequency range when ordering.

3. Noise Figure is single sideband and includes 3-dB image-frequency contribution and 1.5 dB, 30-MHz IF. Noise Figure is affected by the type of diodes used. Significant noise-figure improvement can be realized by using superior-grade diodes and/or by diode selection at extra cost.

4. Other IF Output Connectors can be supplied to customer requirements on special order.

varian
solid state east division

TECHNICAL DATA

V-8314
Series

ORTHOSPAN* MICROWAVE MIXER

12.4-18.0 GHz

DESCRIPTION

V-8314 ORTHOSPAN microwave mixers are balanced mixers for general Ku-band receiver use and are particularly suitable for missile and airborne radar applications where difficult packaging problems are encountered. Models are available for any 2-gigahertz range between 12.4 and 18.0 gigahertz. Low noise versions are available at a modest increase in cost. The unique design of these mixers saves space and weight in addition to providing sensitivity identical with that of conventional balanced mixers. Because of matched waveguide input, V-8314 mixers can be used with a wide variety of local oscillators.

GENERAL CHARACTERISTICS[1]

ELECTRICAL

Frequency Range[2]	12.4 to 18.0 GHz
Noise Figure[3], max	9.0 dB
Signal Input VSWR, max	2.5:1
L.O. Input VSWR, max	3:1
L.O. Power Required, approx	2-4 mW
L.O. Rejection in Signal Arm, min	15 dB
IF Output Impedance, nom	150 Ω
IF Capacitance, nom	10 pF
IF Frequency	2-120 MHz
Crystals, matched pair	1N78DMR

MECHANICAL

Dimensions	See Outline Drawing
Weight, approx	5.0 oz
Mounting Position	Any
Connectors	
Signal Input	Mates with UG-419/U
L.O. Input	Mates with UG-419/U
IF Output[4]	SMA-3mm
Filtered Crystal Current Output	Optional

OUTLINE DRAWING

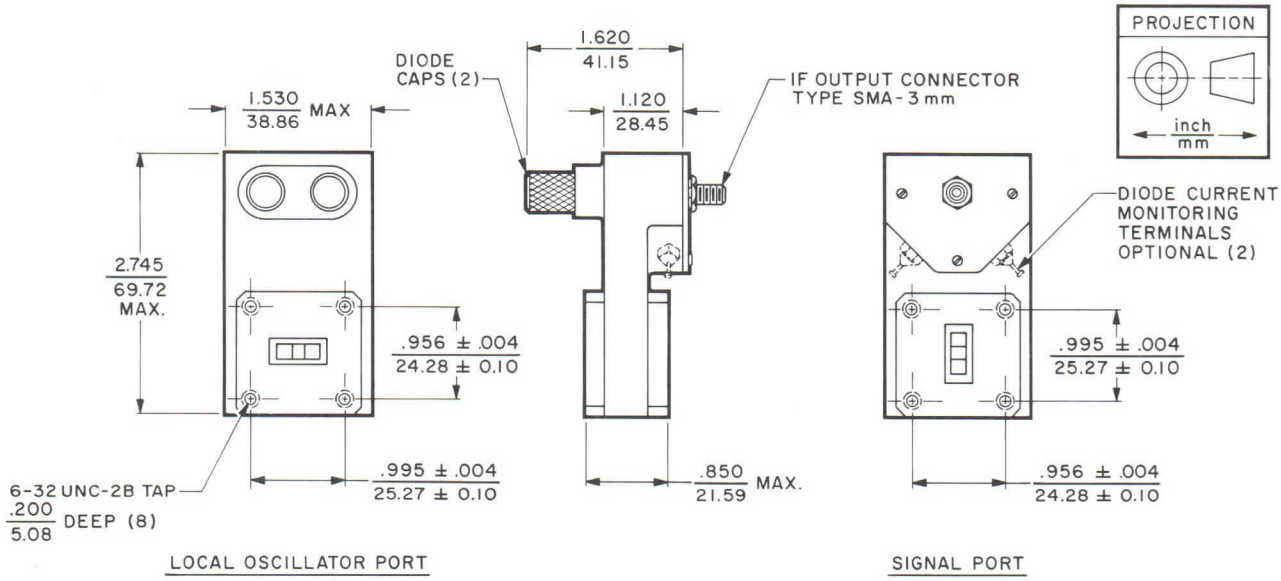

* *TM—Varian Associates*

2982 2/73

Printed in U.S.A.

NOTES:

1. Characteristic values are based on performance tests. These figures may change without notice as a result of additional data or product refinement. Verify these values with your local Varian Sales Office or the Solid State East Division before using them for equipment design.
2. Each mixer covers about 2 GHz; specify the desired operating frequency when ordering.
3. Noise Figure is single sideband and includes 3-dB image-frequency contribution and 1.5 dB, 30-MHz IF. Noise figure is affected by the type of diodes used. Significant noise-figure improvement can be realized by using superior-grade diodes and/or by diode selection, at extra cost.
4. Other IF Output Connectors can be supplied to customer requirements on special order.

varian beverly

PRELIMINARY
TECHNICAL DATA

V-8320
Series

IC MIXERS

1.0-12.4 GHz

DESCRIPTION

V-8320 Series high isolation, single balanced mixers cover frequencies from 1 to 12.4 gigahertz in octave or waveguide bandwidths. These devices employ microwave integrated circuit (MIC) construction techniques, and 90° hybrids. High isolation, typically 9 to 13 dB, and low noise figure are attained by computer matching the hybrid to beam lead mixer diodes over each band. Each mixer is housed in a miniature, compact, universal body. Local oscillator drive is typically +4 dBm, however, units can be furnished for starved LO operation. These mixers can be supplied either separately or mated to standard Varian preamplifiers.

OUTLINE DRAWING

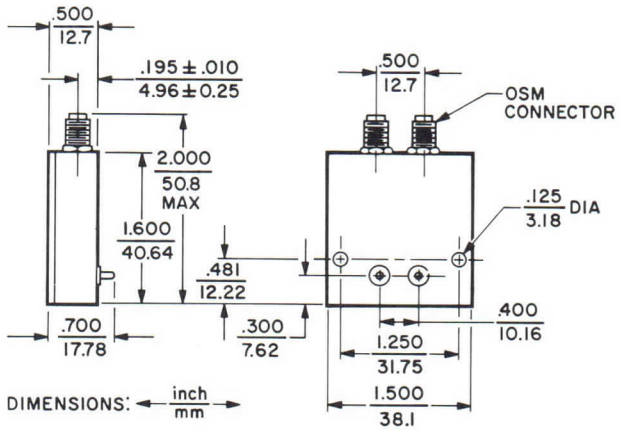

GENERAL CHARACTERISTICS [1]

PERFORMANCE

Frequency Range (GHz)	LO-RF Isolation Minimum (dB)	LO-RF Isolation Typical (dB)	Maximum Noise Figure [2] (dB)	Maximum VSWR	Type Number
1.0 - 2.0	8	12	7.0	1.4:1	V-8321L
2.0 - 4.0	8	12	7.5	1.5:1	V-8322 S
4.0 - 8.0	8	12	8.0	1.5:1	V-8323C
8.0 - 12.4	8	12	8.5	1.75:1	V-8324X

IF CHARACTERISTICS

IF Frequency ..... DC to 300 MHz
Output Impedance
  Single Output .....100 Ω
  Balanced Output, each ..... 200 Ω

PHYSICAL

Dimensions ..... See Outline Drawing
Weight, approx ..... 1.6 oz/45 g
Mounting Position ..... Any
Connectors
  RF ..... Type SMA
  IF ..... Type SMA, single or double pin
Operating Temperature Range .... -20 to 70 °C

NOTES:

1. Characteristic values are based on performance tests. These values may change without notice as a result of additional data or product refinement. Varian Beverly should be consulted before using this information for final equipment design.

2. SSB noise figure includes a 30 MHz IF of 1.5 dB at an LO input of 2-4 mW.

3327 2/75

Printed in U.S.A.

varian

PRELIMINARY
TECHNICAL DATA

VSZ-9754

BROADBAND DOUBLE BALANCED ORTHOCOAX™ MIXER 1.5-18.0 GHz

DESCRIPTION

The VSZ-9754 is a broadband, double-balanced mixer of the ORTHOCOAX configuration that covers the 1.5 to 18.0 gigahertz range instantaneously. It is ideal for use in electronic-warfare equipment, radars, and instrumentation as either a broadband downconverter (mixer), or a double-sideband upconverter. The VSZ-9754 provides the inherent advantages of a double-balanced mixer, i.e. high rf-lo isolation and low IM products, together with high conversion efficiency and low VSWR in a compact, lightweight design.

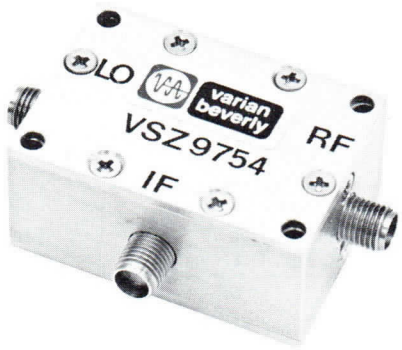

The heart of any double-balanced mixer is the transformer used to couple the r-f energy into the diode bridge. As long as each side of the bridge is properly driven by a 180-degree transformer (balun), the mixer will exhibit its inherent properties of high isolation and low IM products. Multioctave performance is achieved by incorporating a broadband, coaxial balun which transforms from an unbalanced to a balanced line of the required characteristic impedance. The mixer's low-frequency limit is controlled by the balun; and the high frequency by the parasitics of the diode bridge. The VSZ-9754 can be mated with any of the broad line of Varian Beverly preamplifiers.

GENERAL CHARACTERISTICS[1]

ELECTRICAL

Frequency	1.5 to 18.0 GHz
Conversion Loss, maximum[2]	
Broadband	
1.5-8.0 GHz	7 dB
1.5-18.0 GHz	9 dB
8.0-12.4 GHz	8 dB
12.4-18.0 GHz	9 dB
1-dB Output Compression Point[3]	
Power Level in dBm	-2 dBm
IF Passband, 3 dB	0-300 MHz
Isolation, LO-RF/LO-IF, min	20 dB
Input Intercept Point,	
at 10 dBm LO	20 dB
VSWR, LO, max	
Broadband	
1.5-12.4 GHz	2.5:1
1.5-18.0 GHz	3.5:1
12.4-18.0 GHz	3.5:1
VSWR, RF, max	
Broadband	
1.5-12.4 GHz	2.5:1
1.5-18.0 GHz	2.8:1
12.4-18.0 GHz	2.8:1
LO Level	+8 dBm ±2 dB
Burn-out Power, max	
At 25° C	300 mW
At 95° C	140 mW

PHYSICAL

Dimensions	See Outline Drawing
Weight, approximate	2 oz/58 g
Mounting Position	Any
Connectors	SMA
Temperature	
Operating Range	-55 to +95 °C
Storage, max	+150 °C

TM - Varian Trademark

3670 4/77

Printed in U.S.A.

CHARACTERISTIC CURVES[1]

Typical performance values

CONVERSION LOSS VARIATION WITH FREQUENCY

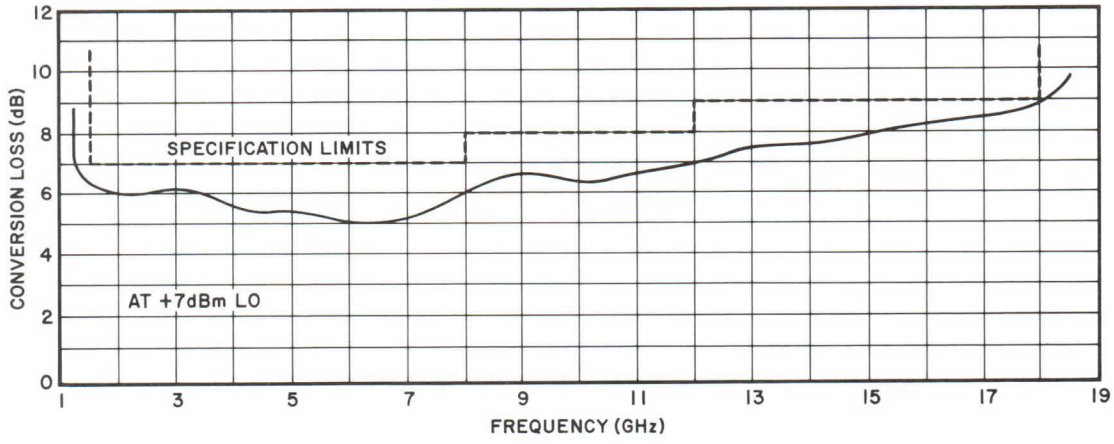

IF BANDWIDTH CHARACTERISTICS

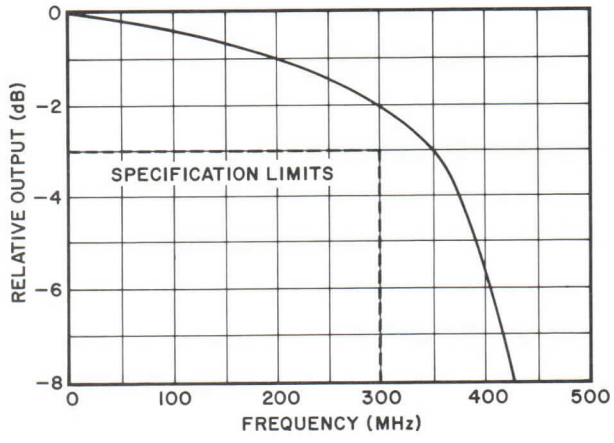

LO/CONVERSION SENSITIVITY CHARACTERISTICS

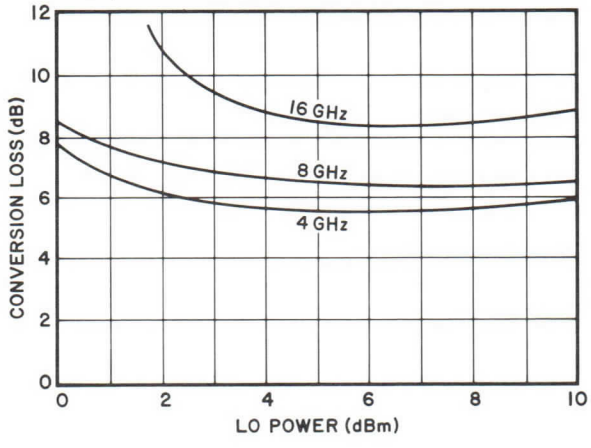

RETURN LOSS AND SIGNAL VSWR CHARACTERISTICS

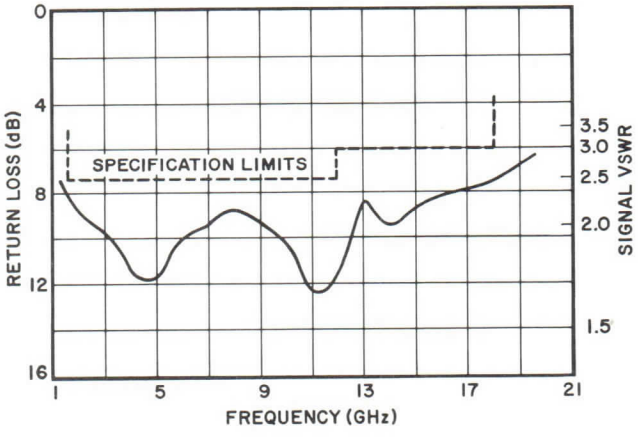

RETURN LOSS AND LO VSWR CHARACTERISTICS

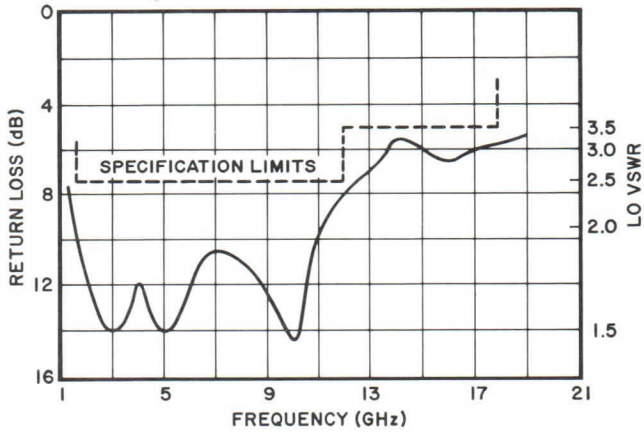

CHARACTERISTIC CURVES[1]

Typical performance values

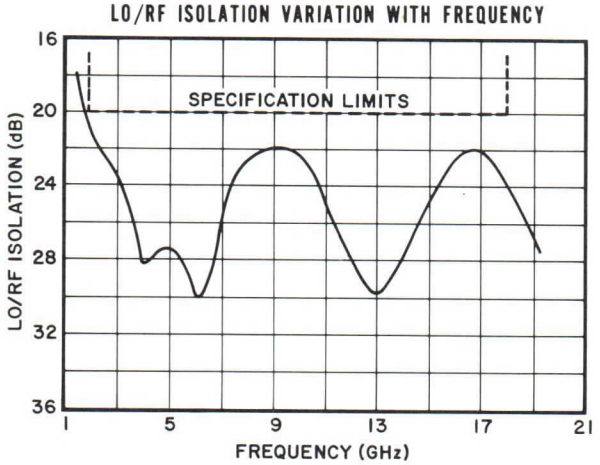

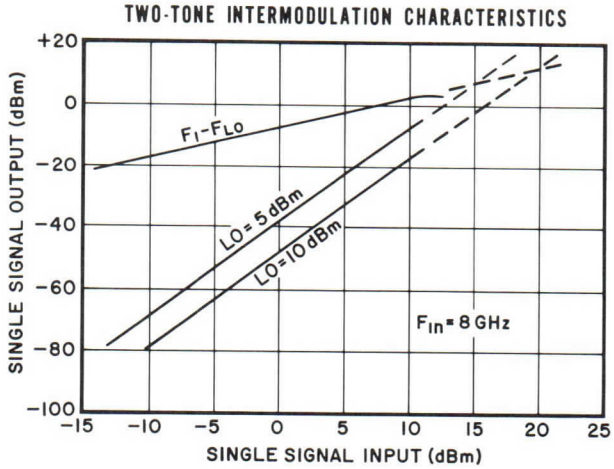

NOTES:

1. General characteristics and characteristic curves are based on performance tests. These figures may change without notice as a result of additional data or product refinement. The Varian Beverly Division should be consulted before using this information for final equipment design.
2. Conversion loss measured at 30 MHz, IF at +7 dBm LO. Noise figure of the mixer is the same as conversion loss for IF frequencies above 1/f noise of Schottky Barrier Diodes.
3. SSB for 30 MHz IF at +10 dBm LO.

OUTLINE DRAWING

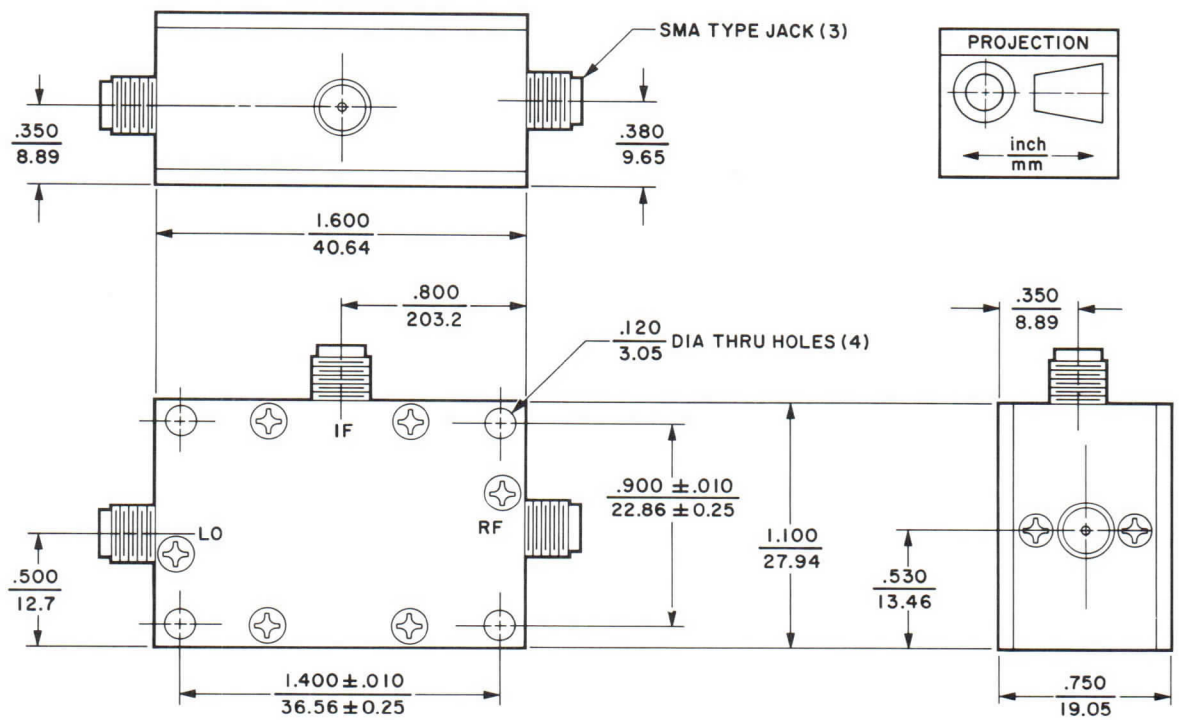

varian

TECHNICAL DATA

9753 Series

IMAGE REJECTION MIXERS

2.0-12.4 GHz

DESCRIPTION

The 9753 Series of mixers are conventional image-rejection devices covering the range of 2 to 12.4 gigahertz in bands up to an octave wide. Each model consists of two mixers, a 90° hybrid, and a power divider combined in a single microwave integrated circuit. Compact packaging is achieved by combining the i-f quadrature network and mixers in a single housing. Standard units in this series employ narrowband i-f quadrature networks, however, broadband i-f coverage is available upon special request. Any of this series can be supplied with optional external bias capability. These mixers can be mated to any of the broad line of Varian preamplifiers.

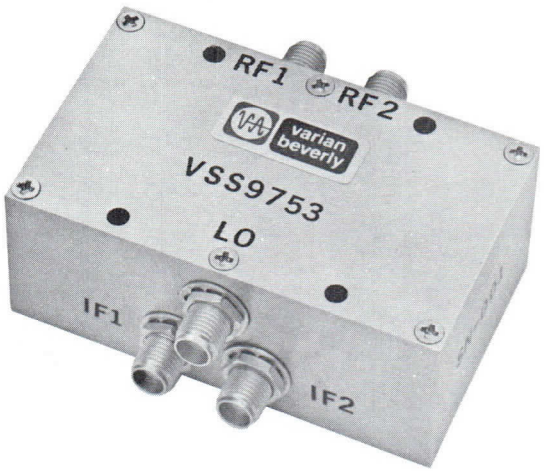

GENERAL CHARACTERISTICS[1]

PERFORMANCE

Frequency Range[2] (GHz)	Minimum Image Rejection (dB)	Maximum Conversion Loss[3] (dB)	Minimum Isolation RF/LO (dB)	Maximum VSWR		Type Number[2]
				LO (dB)	RF (dB)	
2-4	18	7.0	10	2.0:1	1.5:1	VSS-9753
4-8	18	7.5	10	2.0:1	1.5:1	VSC-9753
8-12.4	18	8.0	10	2.2:1	1.75:1	VSX-9753

ELECTRICAL

Local Oscillator Level ..... +6 to +9 dBm
IF Frequency ..... DC to 300 MHz
IF Bandwidth ..... Any 20% Band
Impedance[4], all ports ..... 50 Ω

PHYSICAL

Dimension ..... See Outline Drawing
Weight, approx ..... 4.4 oz/125 g
Operating Temperature Range .. -55 to +85 °C
Storage Temperature, max ..... 150 °C
Connectors ..... Type SMA

NOTES:

1. Characteristic values are based on performance tests. These figures may change without notice as a result of additional data or product refinement. Consult the Varian Beverly Division before using this information for final equipment design.
2. Straddle band units are available with frequencies centered at 4 and 8 GHz. When ordering units with special r-f frequencies, use type number VSZ-9753 and specify desired frequency.
3. Noise figure and conversion loss are the same for i-f frequencies above 1/F noise of Schottky Barrier Diodes.
4. 50 Ω i-f image termination must be supplied by customer.

3674 6/77

Printed in U.S.A.

SCHEMATIC DIAGRAM

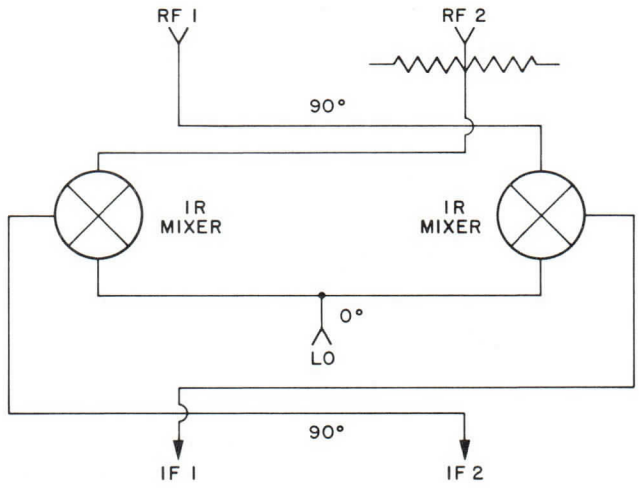

OUTLINE DRAWING

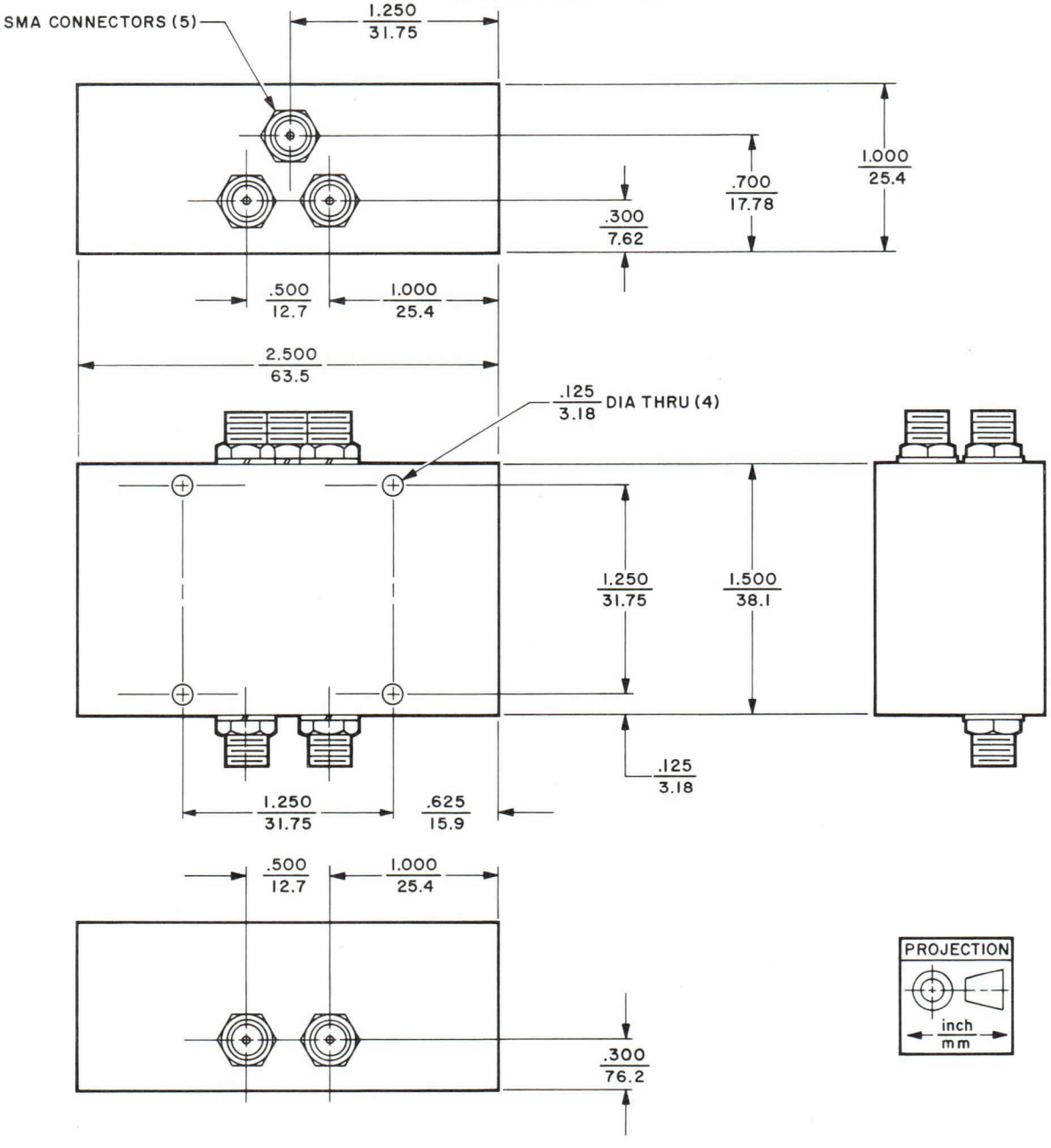

varian

PRELIMINARY
TECHNICAL DATA

9755 Series

ORTHOCOAX™ DOUBLE BALANCED MIXERS

DESCRIPTION

The Varian 9755 Series of ORTHOCOAX double balanced mixers produce octave coverage together with high isolation and low conversion loss. High efficiency, small size, and light weight make them ideal for electronic warfare and communications applications. They are also suitable for use as double sideband upconverters or for mating to any of the broad line of Varian/Beverly preamplifiers. The unique Varian ORTHOCOAX design can provide usable r-f bandwidths of up to 3:1.

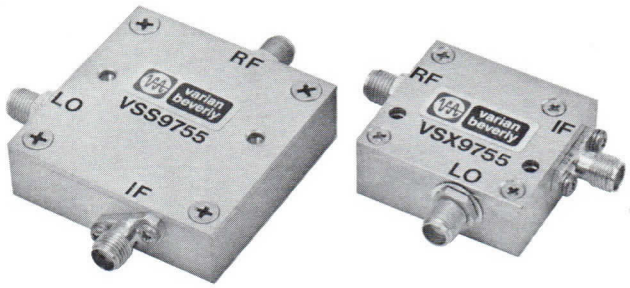

GENERAL CHARACTERISTICS[1]

PERFORMANCE

Frequency Range (GHz)	Minimum Isolation LO - RF (dB)	Minimum Isolation LO - IF (dB)	Maximum Conversion Loss[2] Band Center (dB)	Maximum Conversion Loss[2] Band Edge (dB)	3 dB IF Bandwidth (MHz)	1 dB Output Compression Point[3] (dBm)	Maximum RF/LO VSWR	Type Number
2.0-4.0	25	20	5.0	6.0	DC - 500	+2	2.1:1	VSS-9755
4.0-8.0	25	20	5.5	6.5	DC - 800	+1	2.1:1	VSC-9755
8.0-12.4	25	20	6.0	7.0	DC - 1000	+1	2.2:1	VSX-9755
12.4-18.0	25	20	7.0	8.0	DC - 1200	0	2.2:1	VSU-9755

ELECTRICAL

LO Level, ±2 dB ..... +8 dBm
Impedance, 3 ports ..... 50 Ω
Operating Temperature Range.. -55 to +95 °C
Storage Temperature, max ..... 150 °C
Burn-Out Power, max
At 25° C ..... 300 mW
At 95° C ..... 140 mW

PHYSICAL

Dimensions ..... See Outline Drawings
Weight, approximate
VSS Model ..... 0.25 oz/70 g
VSC, VSX, VSU Models ..... 0.14 oz/40 g
Connectors ..... SMA

NOTES:

1. Characteristic values are based on performance tests. These figures may change without notice as a result of additional data or product refinement. Consult Varian Beverly before using this information for final equipment design.
2. Noise figure and conversion loss are the same for IF frequencies above $1/f$ noise of Schottky-barrier diodes.
3. SSB for 30 MHz IF at +10 dBm L.O. and at band center.

TM — Varian Trademark

3659 4/77

Printed in U.S.A.

OUTLINE DRAWINGS

VSS-9755

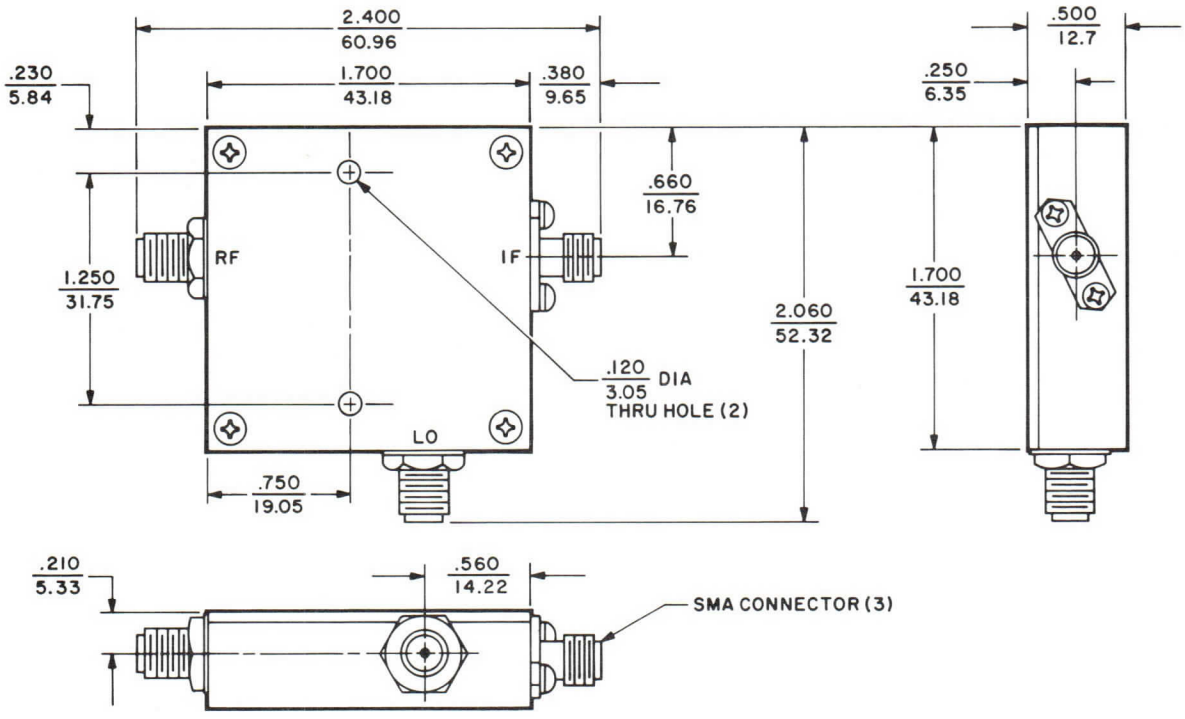

VSC-9755, VSX-9755, VSU-9755

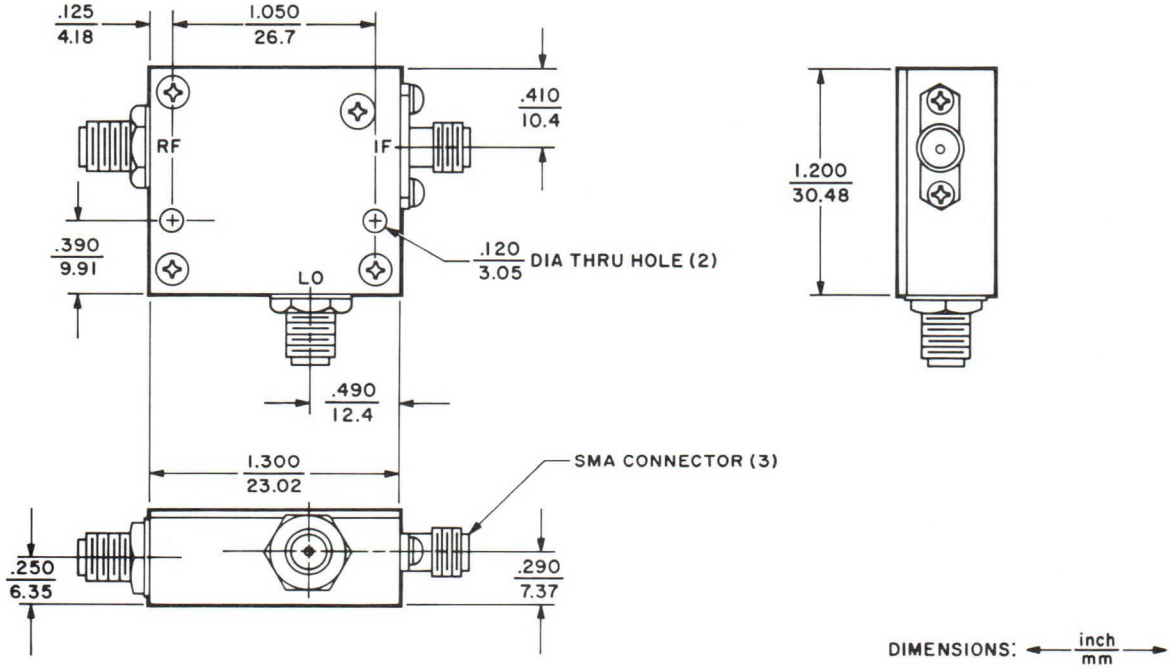

DIMENSIONS: ← inch / mm →

varian

TECHNICAL DATA

9755A/B Series
ORTHOCOAX® DOUBLE BALANCED MIXER/PREAMPLIFIER 2-18 GHz

DESCRIPTION

The Varian 9755A/B Mixer/Preamplifier Series combines Varian's unique 9755 ORTHOCOAX series of double-balanced IC mixers with either of two IC preamplifiers on a common chassis. This combination offers a wide dynamic range with low noise. Units are available in octave and half-octave bandwidths as well as straddle-bands in the 2 to 18 gigahertz range with i-f frequencies ranging from 5 to 500 megahertz. Thin film and integrated circuit techniques are used to provide substantial savings in size, weight and cost.

GENERAL CHARACTERISTICS [1]
PERFORMANCE

Frequency Range [2] (GHz)	IF Frequency [3] Center Frequency (MHz)	IF Frequency [3] 3-dB Bandwidth [4] (MHz)	Maximum Noise Figure [5] (dB)	Minimum Gain RF-IF (dB)	Type Number [6]
2-4	30	10	8	23	VSS-9755A-30-10
	60	20	8	23	VSS-9755A-60-20
	160	40	8	20	VSS-9755A-160-40
	205	400	9	20	VSS-9755B-205-400
4-8	30	10	8.5	23	VSC-9755A-30-10
	60	20	8.5	23	VSC-9755A-60-20
	160	40	8.5	20	VSC-9755A-160-40
	255	500	9.5	20	VSC-9755B-255-500
8-12	30	10	9	23	VSX-9755A-30-10
	60	20	9	23	VSX-9755A-60-20
	160	40	9	20	VSX-9755A-160-40
	255	500	10	20	VSX-9755B-255-500
12-18	30	10	10	23	VSU-9755A-30-10
	60	20	10	23	VSU-9755A-60-20
	160	40	10	20	VSU-9755A-160-40
	255	500	11	20	VSU-9755B-255-500

3701 6/77

Printed in U.S.A.

GENERAL CHARACTERISTICS[1]

ELECTRICAL

LO Level ..... +8 dBm ±2 dB
Power Output, min
at 1-dB compression ..... 0 dBm
DC Power Requirements, saturated
Voltage ..... 12 Vdc
Current ..... 50 mAdc
VSWR, 50 Ω all ports, max 2.2:1

PHYSICAL

Dimensions ..... See Outline Drawing
Weight, approx ..... 2.8 oz/80 g
Connectors ..... Female SMA
Temperature
Operating ..... -55 to +95 °C
Storage ..... 125 °C

ORDERING INFORMATION[6]

VS X-9755 A-60-20

- VS: Varian Solid State Product
- X: RF Frequency Coverage
- 9755: Mixer Type Designation
- A: Preamplifier Model Designation
- 60: IF Center Frequency
- 20: IF 3-dB Bandwidth

NOTES:

1. Characteristic values are based on performance tests. These figures may change without notice as a result of additional data or product refinement. Consult the Varian Beverly Division before using this information for final equipment design. For detailed mixer specifications, consult the latest 9755 Series data sheet.

2. Units are available with up to octave bandwidths centered at 4, 8, or 12 GHz. When ordering units with special r-f frequencies, use type number VSZ-9755 and specify desired frequency.

3. Standard i-f frequencies are available from 5 to 500 MHz. The values shown are only some of the possible choices available.

4. For i-f bandwidths of 10 to 200 MHz, an A model preamplifier is required and for i-f bandwidths greater than 200 MHz, a B model preamplifier is required. Special units are available for i-f bandwidths up to 1 GHz. Consult the Varian Beverly Division for information on these special units.

5. Units with lower noise figures are available over narrower bandwidths.

6. When ordering, construct the type designation as shown. Specify the preamplifier model, the desired i-f center frequency and 3-dB bandwidth.

OUTLINE DRAWING

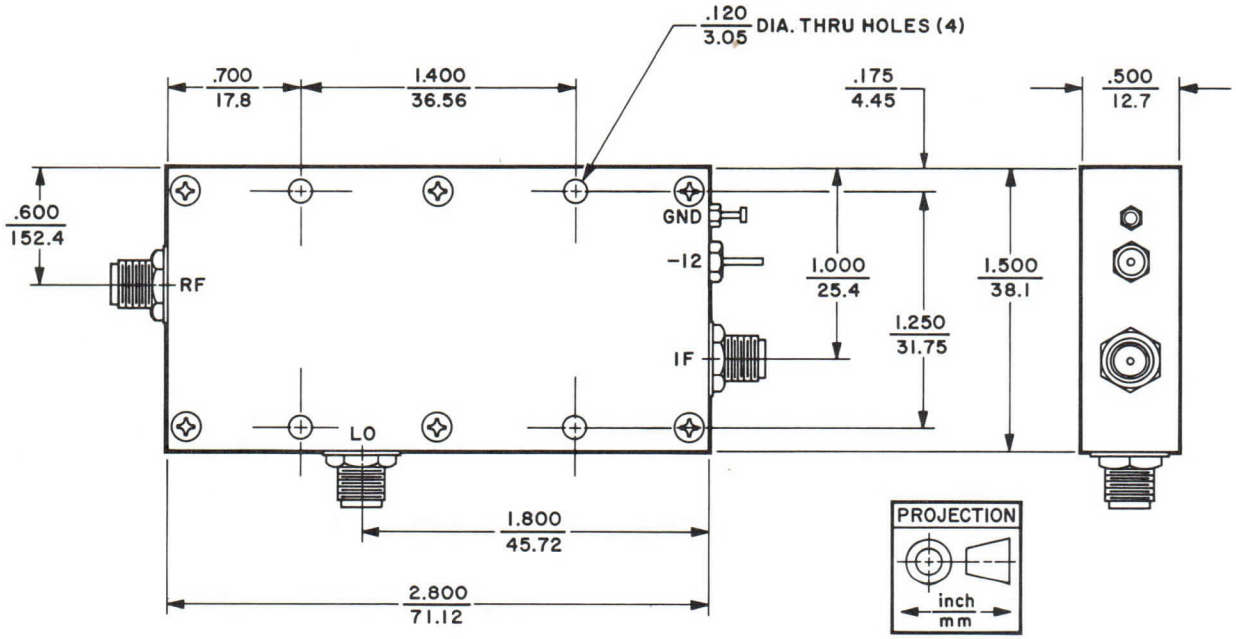

varian
solid state east division

TECHNICAL DATA

KC-7A

COAXIAL
MIXER-PREAMPLIFIERS
1.0-18.0 GHz

DESCRIPTION

The KC-7A series of coaxial mixer-preamplifiers are low-noise, solid-state devices which combine the improved performance of Schottky-barrier-diode mixers with a unique preamplifier design. This combination produces lower noise figures than previously available and significantly increased power handling capability. The increased power-handling capability extends the dynamic range available to receiver designers, and reduces the level of unwanted intermodulation products. The preamplifier operates with low d-c input power. All units provide crystal current monitoring that can be d-c biased for lower LO input power. Solid-state components and a rugged i-f printed circuit assure high reliability and uniform construction.

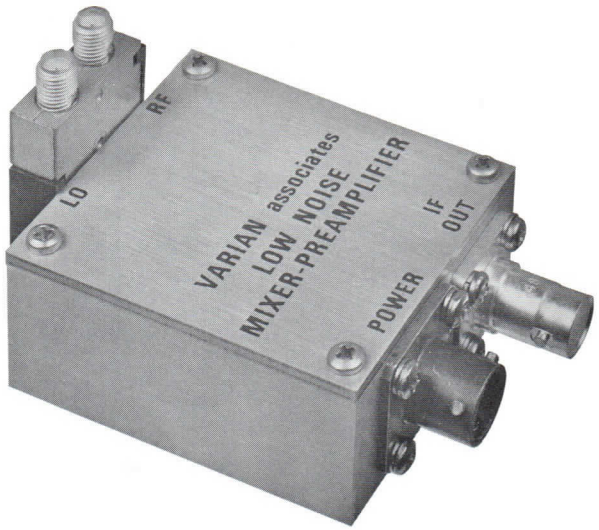

GENERAL CHARACTERISTICS[1]

RF Frequency Range (GHz)	Noise Figure[2] Typical (dB)	Noise Figure[2] Maximum (dB)	Maximum RF and LO VSWR at 50 Ω Impedance	Minimum LO to RF Isolation (dB)	Minimum RF to IF Gain (dB)	Basic Model Number[3]
1.0-2.0	7.5	8.0	1.35:1	5	20	LKC-7A
2.0-4.0	7.5	8.0	1.35:1	5	20	SKC-7A
4.0-8.0	8.0	8.5	1.5:1	5	20	CKC-7A
8.0-12.4	8.0	8.5	1.7:1	5	20	XKC-7A
12.4-18.0	8.5	9.0	1.7:1	5	20	KKC-7A

ELECTRICAL

Power Output, at 1 dB compression
- Typical ..... +10 dBm
- Minimum ..... +8 dBm

Bandwidth, 3 dB[3] ..... 10, 20, or 40 MHz
Intermediate Frequency 30, 50, 60, or 70 MHz
IF Output VSWR, maximum 2:1
LO Input Power ..... 3 to 4 mW
Output Impedance[4] ..... 50 Ω
DC Power Requirements
- Voltage[5] ..... -20 Vdc
- Current ..... 10 mA

PHYSICAL

Dimensions ..... See Outline Drawings
Weight, maximum ..... 6 oz
Connectors
- RF and LO ..... SMA-3 mm
- IF ..... BNC, UG-290A/U
- Power ..... Bendix PTO2E-10-6P

ORDERING INFORMATION[6]

L KC -7A -30 -10 -50

- L — Frequency Band
- KC — Mixer Type
- -7A — Preamplifier Type
- -30 — Intermediate Frequency
- -10 — Bandwidth At 3 dB
- -50 — Output Impedance

2969 3/73

Printed in U.S.A.

OUTLINE DRAWINGS

LKC-7A

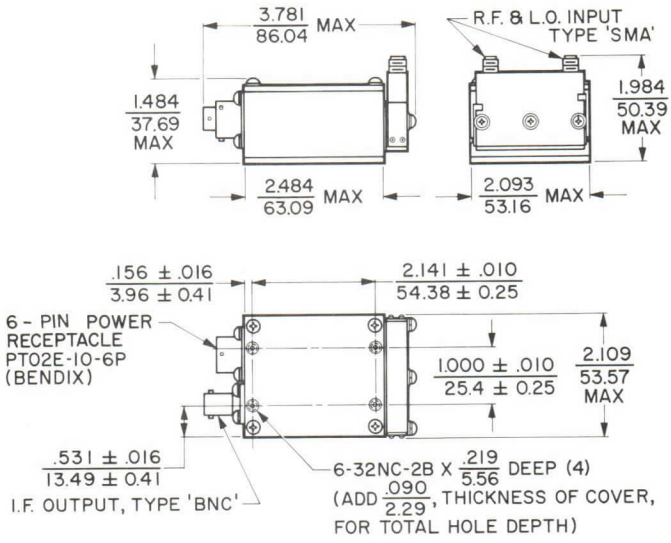

SKC-7A

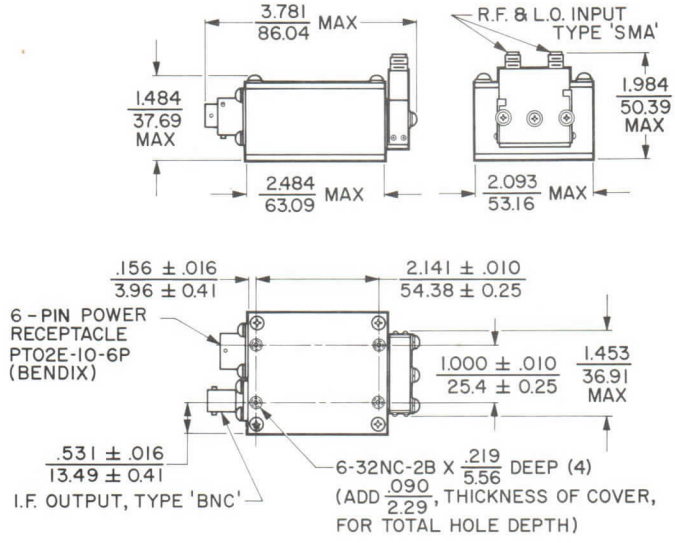

CKC-7A & XKC-7A

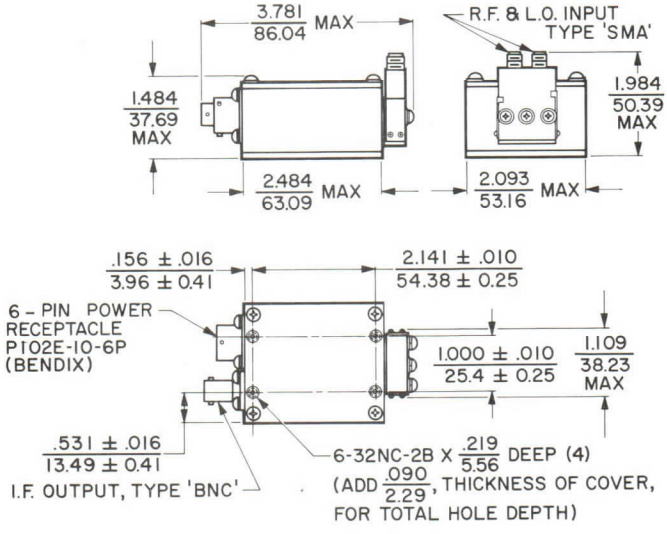

KKC-7A

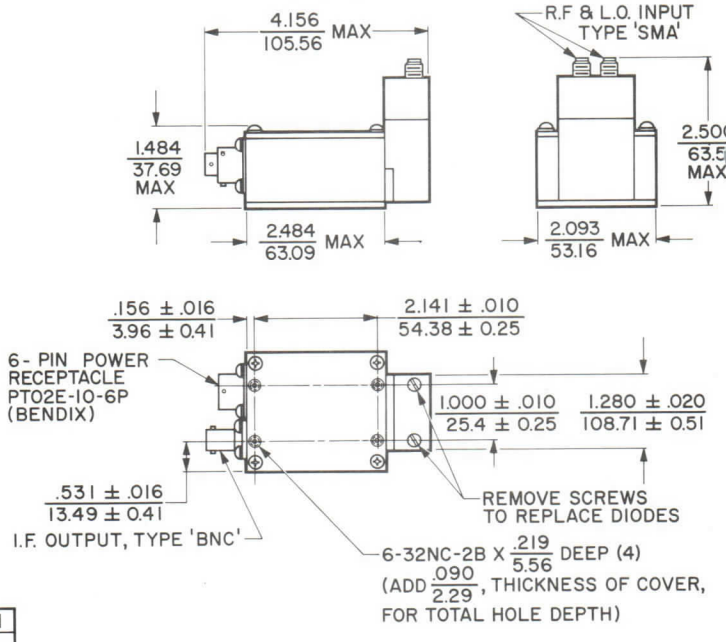

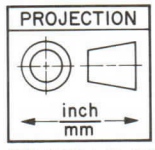

R.F. AND L.O. INPUTS ARE INTERCHANGEABLE

NOTES:

1. General characteristic values are based on performance tests. These figures may change without notice as a result of additional data or product refinement. Consult the Varian Solid State East Division before using this information for final equipment design.
2. Special versions having lower noise figures can be supplied for operation over selected portions of the frequency ranges listed.
3. A bandwidth of 40 MHz is standard only for models having i-f center frequencies of 60 or 70 MHz.
4. Output impedances of 75 Ω or 93 Ω are available on special order.
5. Models which operate from a +20 Vdc, 10 mA supply are also available.
6. When ordering, add the i-f frequency, bandwidth, and output impedance desired to the basic model number, as shown in the example. Also specify whether a negative or positive 20 Vdc supply is desired.

varian

TECHNICAL DATA

IC-11A
Series

INTEGRATED CIRCUIT
MIXER-PREAMPLIFIERS
1.0-12.4 GHz

DESCRIPTION

The IC-11A series coaxial mixer-preamplifiers are miniature, low-noise, solid-state devices that cover octave bandwidths in the 1.0 to 12.4 gigahertz range and utilize thin-film, hybrid integrated-circuit techniques. These lightweight mixers are of the tandem quadrature-coupler, balanced type. Improved performance is achieved through the use of Schottky-barrier diodes in the mixer and a low-noise, wide-dynamic-range pre-amplifier. Thus, a substantial reduction in size, weight, and cost has been achieved.

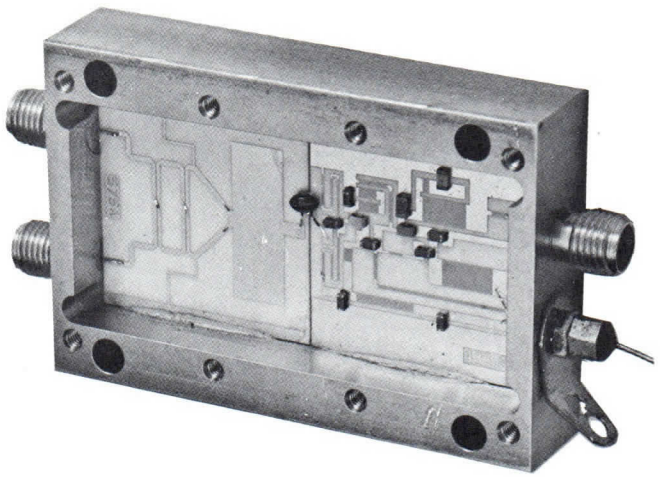

GENERAL CHARACTERISTICS[1]

RF Frequency Range (GHz)	Typical Noise Figure[2] (dB)	Maximum RF and LO VSWR at 50 Ω Impedance	Minimum LO to RF Isolation (dB)	Minimum RF to IF Gain (dB)	Basic Model Number[3]
1.0 - 2.0	7.5	1.5:1	8	24	LIC-11A
2.0 - 4.0	7.5	1.5:1	8	24	SIC-11A
4.0 - 8.0	8.0	1.7:1	6	24	CIC-11A
8.0 - 12.4	8.0	2.0:1	6	24	XIC-11A

ELECTRICAL

Power Output, at 1 dB compression
- Typical ..... +2 dBm
- Minimum ..... 0 dBm

Bandwidth, 3 dB[4] ..... 100 MHz
Intermediate Frequency ..... 70 MHz
IF Output VSWR, maximum 2:1
LO Input Power ..... 5 to 10 mW
Output Impedance[5] ..... 50 Ω
DC Power Requirements
- Voltage ..... +12 Vdc
- Current ..... 50 mA

PHYSICAL

Dimensions ..... See Outline Drawing
Weight, approximate ..... 2 oz/56.8 g
Connectors
- RF, IF and LO ..... OSSM 1.7 mm
- Power ..... Filtercon 1VB50

3588 7/76

Printed in U.S.A.

ORDERING INFORMATION [3]

L IC -11A -70 -100 -50

- L — Frequency Band
- IC — Mixer Type
- -11A — Preamplifier Type
- -70 — Intermediate Frequency
- -100 — Bandwidth At 3 dB
- -50 — Output Impedance

NOTES;

1. Characteristic values are based on performance tests. These values may change without notice as a result of additional data or product refinement. Consult Varian before using this information for final equipment design.
2. Versions having lower noise figures can be supplied for operation over selected portions of the frequency range listed.
3. When ordering, add the i-f frequency, bandwidths, and output impedance desired to the basic model number, as shown in the example.
4. Units having narrower bandwidths are available.
5. Output impedances of 75 Ω or 93 Ω are available.

OUTLINE DRAWING

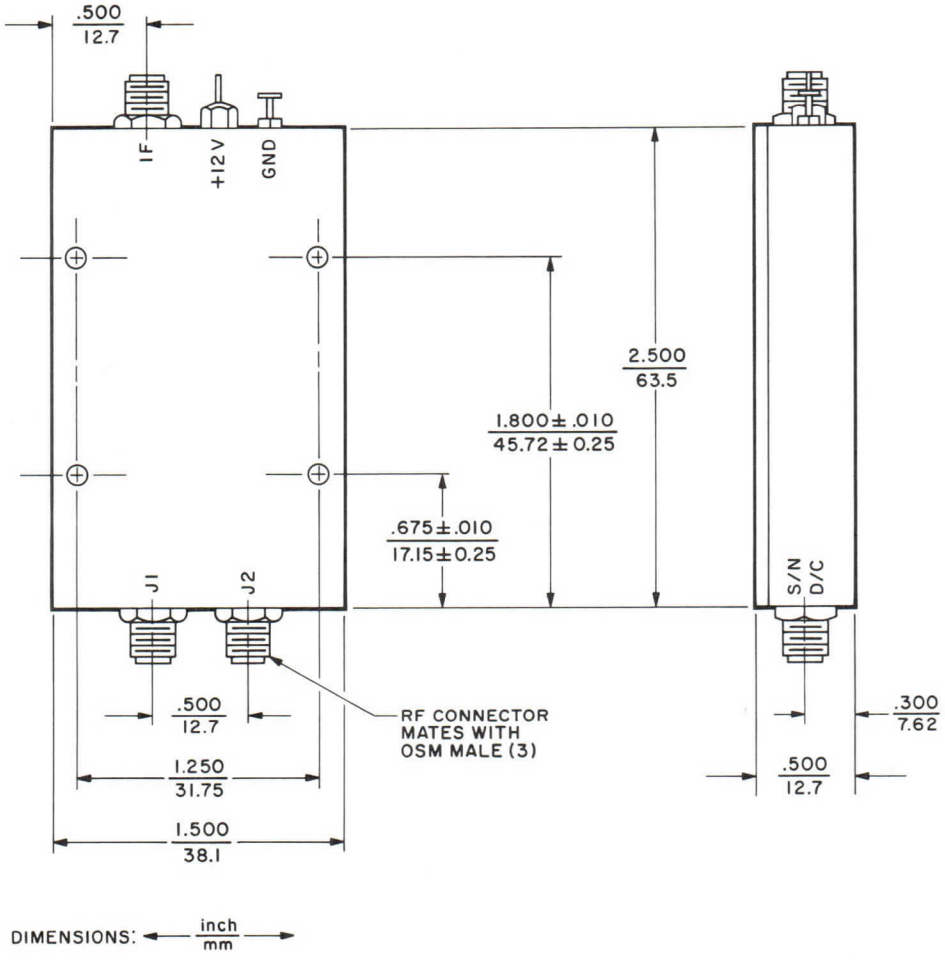

RF COMPONENTS

antenna preamplifiers
converters
low noise preamplifiers
octave amplifiers
passive multicouplers

varian
solid state division

TECHNICAL DATA

OTX-1 Series

LOW NOISE WIDEBAND SOLID-STATE PREAMPLIFIERS

DESCRIPTION

The OTX-1 series of low-noise, wideband, solid-state preamplifiers covers the frequency range of 10 to 2000 megahertz. They are ideal for use in electronic-warfare, monopulse, and missile-guidance receivers and as TWT replacements. These preamplifiers feature ultra-low noise figure, typically 4 to 5 decibels, together with high input- and output-power-handling capability to minimize intermodulation and harmonic distortion. Units having even lower noise figure can be furnished on special order. Higher input-power versions can also be supplied, but with a slight increase in noise figure. Modular construction and all solid-state components provide high reliability and uniformity. All units are designed to meet MIL-I-16400 and MIL-E-5400 Class II requirements.

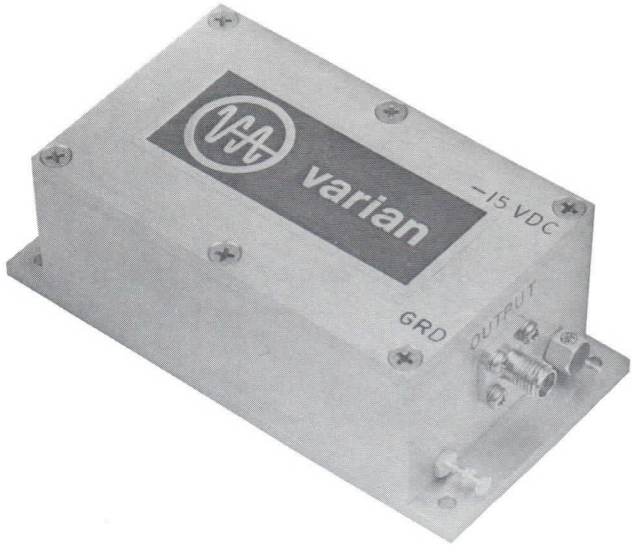

GENERAL CHARACTERISTICS[1]

CHARACTERISTIC		MODEL NUMBER			
		OTX-1-10	OTX-1-250	OTX-1-500	OTX-1-1000A
Operating Frequency, between 3-dB points, min	(MHz)	10-250	250-500	500-1000	1000 to 2000
Noise Figure, at 25°C, max	(dB)	4	5	5	5.5
Gain, midband, min	(dB)	24	20	20	23
Source Impedance	(Ω)	50	50	50	50
Output Impedance	(Ω) (VSWR)	50 1.5:1	50 2:1	50 2:1	50 2:1
Power Output, at 1-dB compression	(Typ dBm) (Min dBm)	2 0	2 0	2 0	9 5
Temperature Range	(°C)	-40 to +55	-40 to +55	-40 to +55	-30 to +60
Supply Voltage	(Vdc)	-20	-20	-15	-15
Supply Current, max	(mAdc)	45	50	40	75
Weight	(oz)	5	5	5	9

2915 10/72

Printed in U.S.A.

OUTLINE DRAWINGS

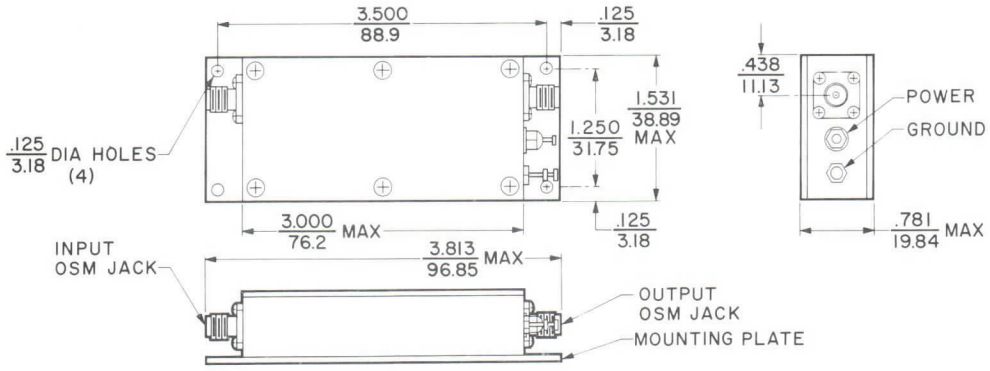

OTX-1-10 & OTX-1-250

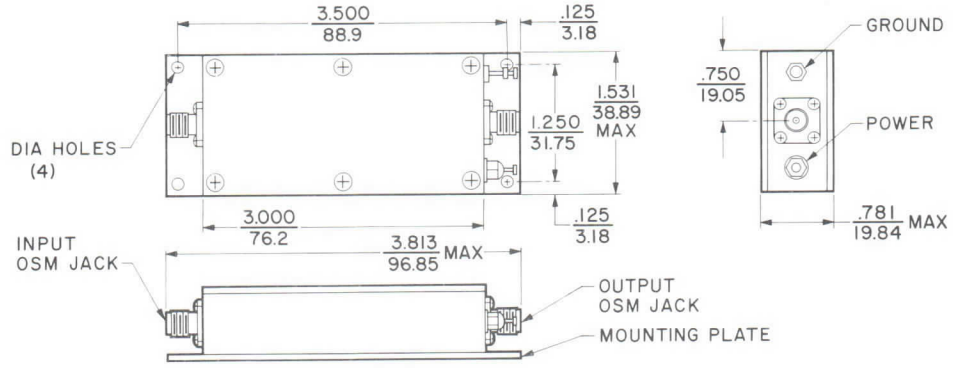

OTX-1-500

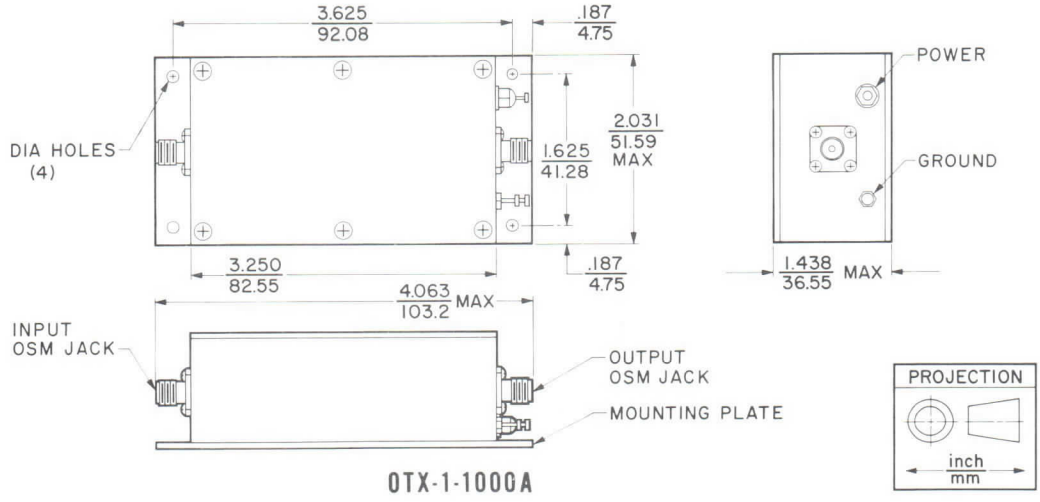

OTX-1-1000A

NOTE:

1. General characteristics are based on performance tests. These figures may change without notice as a result of additional data or product refinement. The Varian Solid State Division should be consulted before using this information for final equipment design.

varian
solid state division-west

TECHNICAL DATA

200 Series

TWO-STAGE YIG-TUNED FILTERS

0.5-18.0 GHz

Formerly RYKA 200 Series

DESCRIPTION

Varian 200 Series two-stage, YIG-tuned, bandpass filters are electrically-tunable, low-insertion-loss microwave filters for use in systems requiring stable performance under widely-varying ambient environmental conditions. These compact solid-state devices provide outstanding tuning accuracy, linearity, and low hysteresis, making them ideal choices for preselector applications from 500 megahertz to 18 gigahertz. Each model incorporates a magnetic circuit which is completely shielded from local magnetic fields.

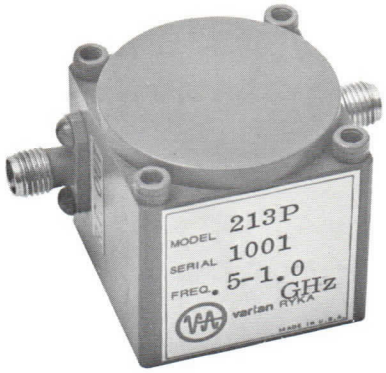

RF PERFORMANCE[1]

Frequency Range (GHz)	Insertion Loss (dB)	3-dB Bandwidth[2] (MHz)	Minimum Off Resonance Spurious (dB)	Frequency Drift (MHz) Typ	Frequency Drift (MHz) Max	Model Number
0.5-1.0	5	20 ± 5	45	5	10	211P
0.5-1.0	4	25 ± 5	45	5	8	213P
1.0-2.0	3	25 ± 5	45	4	8	211L
1.0-2.0	3	25 ± 5	45	4	6	213L
2.0-4.0	3	25 ± 5	30	4	8	211S
2.0-4.0	3	25 ± 5	30	4	6	212S
4.0-8.0	2.5	35 ± 5	30	5	10	211C
4.0-8.0	2.5	35 ± 5	30	5	10	212C
8.0-12.4	2.5	40 ± 10	30	6	12	211X
8.0-12.4	2.5	40 ± 10	30	6	10	212X
12.4-18.0	2.5	45 ± 10	30	6	12	211Ku
12.4-18.0	2.5	45 ± 10	30	6	10	212Ku

Passband Spurious and Ripple ..... <1.5 dB
Frequency Selectivity 12 dB/oct
Limiting Level ..... ≥10 dBm
Off Resonance Isolation >55 dB
Passband VSWR[3] ..... <2:1

TUNING COIL CHARACTERISTICS[1,4]

Tuning Sensitivity (MHz/mA)	Resistance at 25°C (Ω)	Inductance (mH)	Linearity (± MHz)	Hysteresis (MHz)	Model Number
13	10	40	2	2	211P
13	10	40	2	2	213P
13	10	40	2	4	211L
13	10	40	2	4	213L
13	10	40	3	4	211S
13	10	40	3	4	212S
13	10	40	5	6	211C
13	10	40	5	6	212C
17	10	75	8	12	211X
17	10	75	8	12	212X
22	10	100	10	18	211Ku
22	10	100	10	18	212Ku

PARAMETER DEFINITIONS

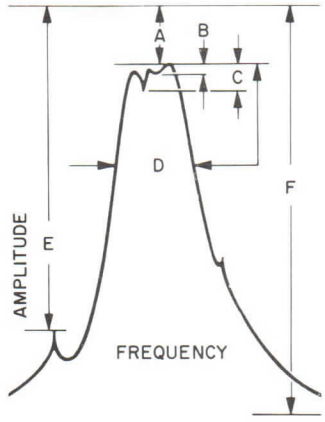

A. Insertion Loss - Loss in excess of straight transmission.

B. Pass Band Ripple - Over coupling variations in peak response of pass band.

C. Pass Band Spurious - Magnetostatic mode pass band interference.

D. Bandwidth - Half power (3 dB) width of response when measured from peak.

E. Off Resonance Spurious - Spurious modes of magnetostatic modes down to a total of 5 dB affecting skirt response.

F. Off Resonance Isolation - Attenuation outside band of filter response.

2926 12/72

Printed in U.S.A.

NOTES:

1. R-f performance and tuning coil characteristic values are based on performance tests. These figures may change without notice as the result of additional data or product refinement. Consult Varian Solid State Division-West before using this information for final equipment design.
2. Models having wider or narrower bandwidths can be furnished on special order. Narrow-bandwidth filters have slightly greater insertion loss.
3. Measured near center of passband.
4. 212 and 213 Models operate over a temperature range of 0 to +50 °C; 211 Models operate over wider ranges and can be furnished for operation from -55 to +85 °C. 211 and 213 Models are equipped with 20-30 volt, 1.5 watt d-c heaters to stabilize passband response; 212 Models have no heaters.

OUTLINE DRAWINGS

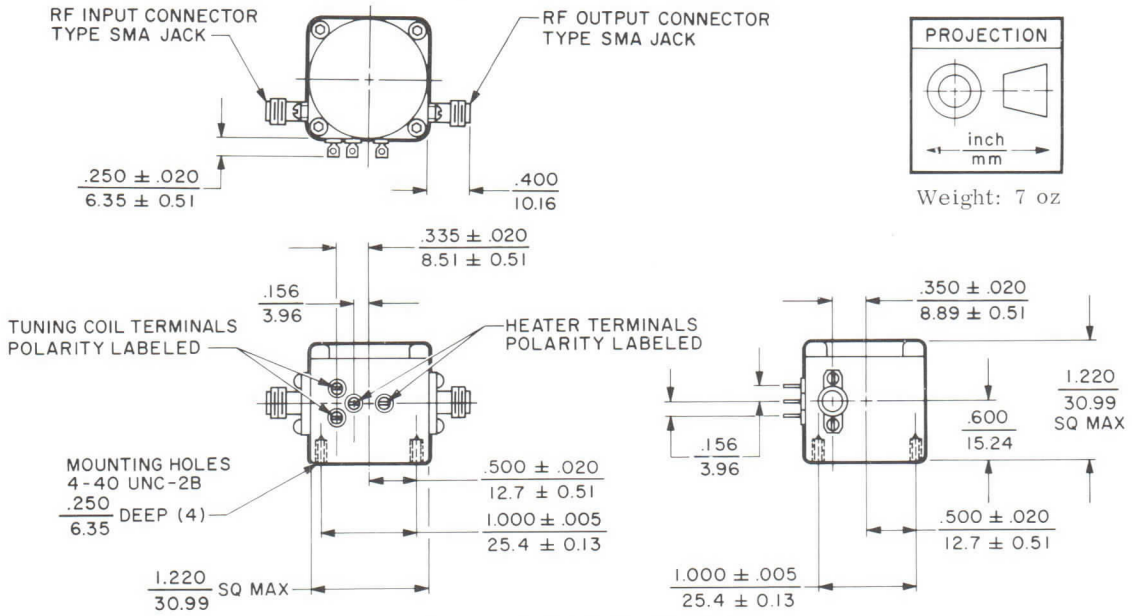

P-, L-, & S-BAND MODELS

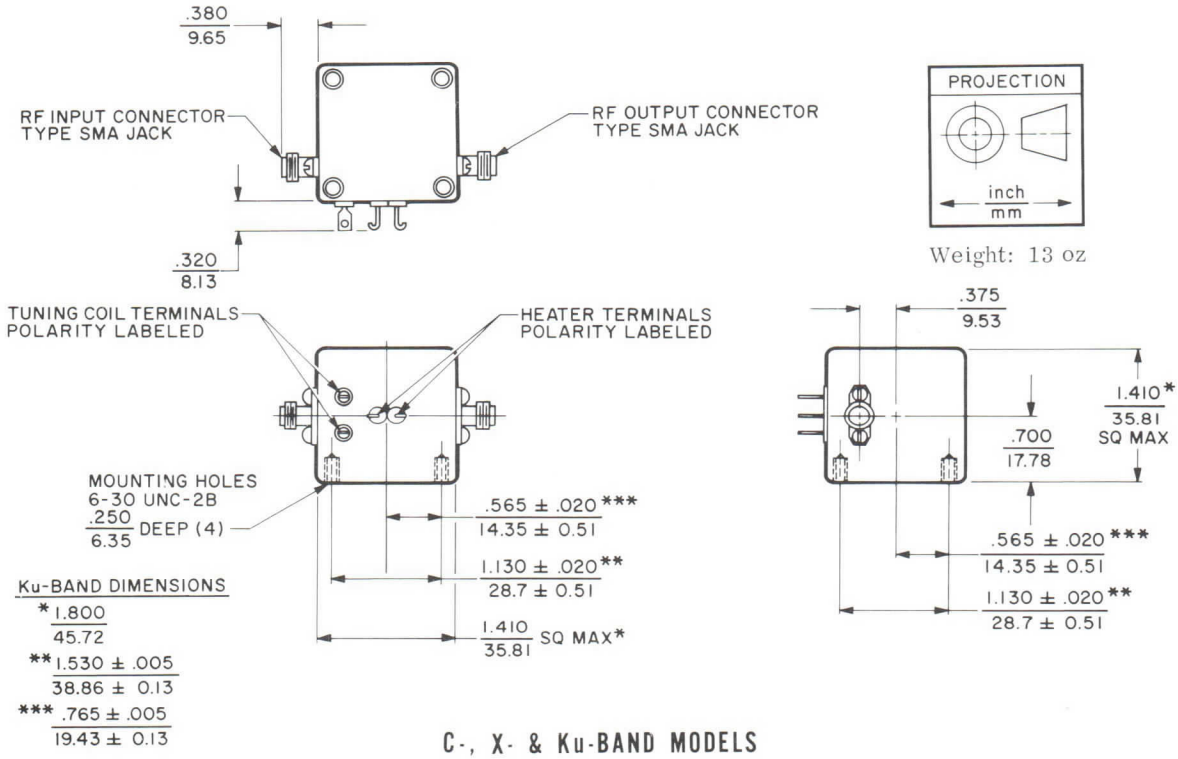

C-, X- & Ku-BAND MODELS

varian
solid state west division

TECHNICAL DATA

200M
Series
TWO-STAGE
MULTIOCTAVE
YIG-TUNED FILTERS
1.0-12.4 GHz

Formerly RYKA 212M Series

DESCRIPTION

Varian 200M Series two-stage, YIG-tuned, bandpass filters are electrically-tunable, low-insertion-loss multioctave filters for use in laboratory signal sorting components and test equipments such as wide-range spectrum analyzers and field-intensity receivers. These compact solid-state devices provide linear-ramp d-c tuning characteristics over their respective multioctave bands with an accuracy of better than 0.5 percent. Each model incorporates a magnetic circuit which is effectively shielded from local magnetic fields.

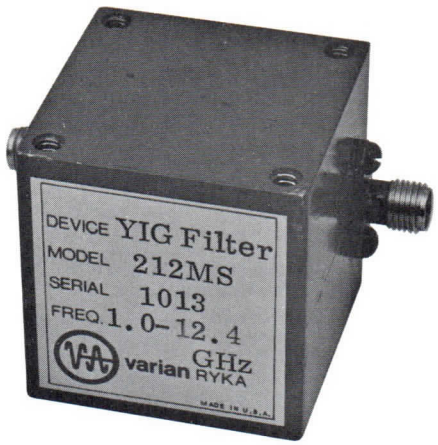

RF PERFORMANCE [1, 2]

Frequency Range (GHz)	Insertion Loss [3] (dB)	3-dB Bandwidth [4] (MHz)	Limiting Level [5] (dBm)	Frequency Drift [6] (MHz)		Model Number [7]
				Typ	Max	
1.0-12.4	6	15-60	+10	8	15	212MS-1
1.0-18.0	6	15-60	+10	12	20	212M-1
2.0-12.4	4	20-50	-25 (1.0-1.8 GHz) +10 (1.8-12.4 GHz)	8	15	212MS
2.0-18.0	4	20-70	-25 (1.0-1.8 GHz) +10 (1.8-18.0 GHz)	12	20	212M

Passband Spurious and Ripple ..... < 2 dB
Frequency Selectivity 12 dB/oct

Off Resonance Spurious, min [8] ..... > 20 dB
Off Resonance Isolation > 55 dB

TUNING COIL CHARACTERISTICS [1, 2]

Tuning Sensitivity (MHz/mA)	Resistance at 25 °C Ω	Inductance (mH)	Linearity (± MHz)	Hysteresis [9] (MHz)	Model Number
17	10	80	8	14	212MS-1
22	10	100	10	16	212M-1
17	10	80	8	14	212MS
22	10	100	10	16	212M

PARAMETER DEFINITIONS

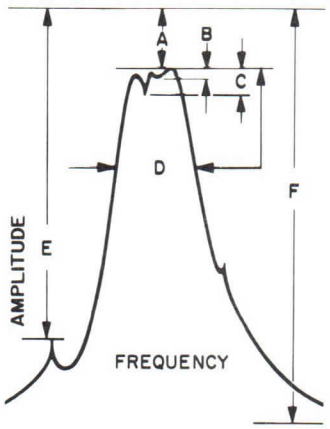

A. Insertion Loss - Loss in excess of straight transmission.

B. Pass Band Ripple - Over coupling variations in peak response of pass band.

C. Pass Band Spurious - Magnetostatic mode pass band interference.

D. Bandwidth - Half power (3 dB) width of response when measured from peak.

E. Off Resonance Spurious - Spurious modes of magnetostatic modes down to a total of 5 dB affecting skirt response.

F. Off Resonance Isolation - Attenuation outside band of filter response.

3021 5/73

Printed in U.S.A.

NOTES:

1. R-f performance and tuning coil characteristic values are based on performance tests. These figures may change without notice as the result of additional data or product refinement. Consult the Varian Solid State West Division before using this information for final equipment design.
2. The models listed operate over the temperature range of 0 to 50 °C. Models operating over wider temperature ranges are also available. Consult the Varian Solid State West Division for specific applications.
3. Insertion loss is typically less than 4 dB from 1.8 to 12.4 GHz but may be slightly greater than 5 dB from 1.0 to 1.8 GHz.
4. Models having wider or narrower bandwidths can be furnished on special order. Narrow-bandwidth filters have slightly greater insertion loss.
5. The frequency of the onset of limiting is temperature dependent. Typical values are for 25 °C.
6. Frequency drift with temperature at frequency extremes will be greater and may not have the same sign.
7. Models operating up to 12.4 GHz can be supplied with either Type N or SMA connectors; models operating to 18 GHz are equipped only with SMA connectors.
8. 210 mode spacing is less than 420 MHz from the center of the main passband.
9. Hysteresis is measured at midband after tuning over the entire frequency range. Narrower tuning excursions will have proportionally less hysteresis.

OUTLINE DRAWINGS

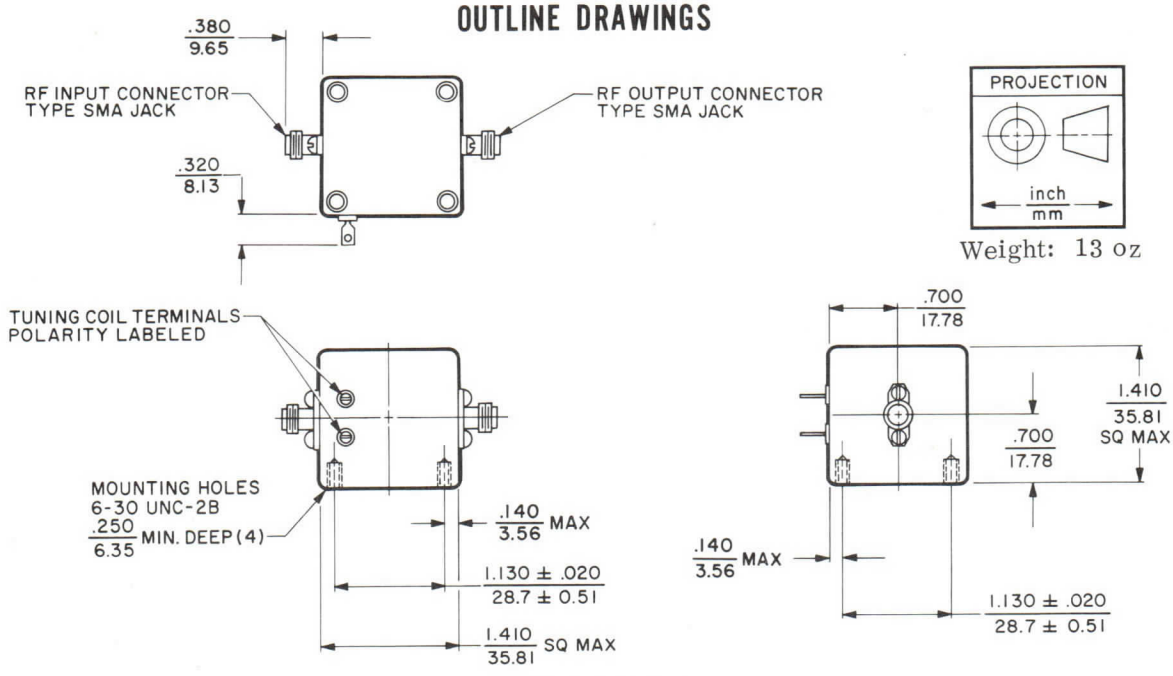

Weight: 13 oz

212MS & 212MS-1

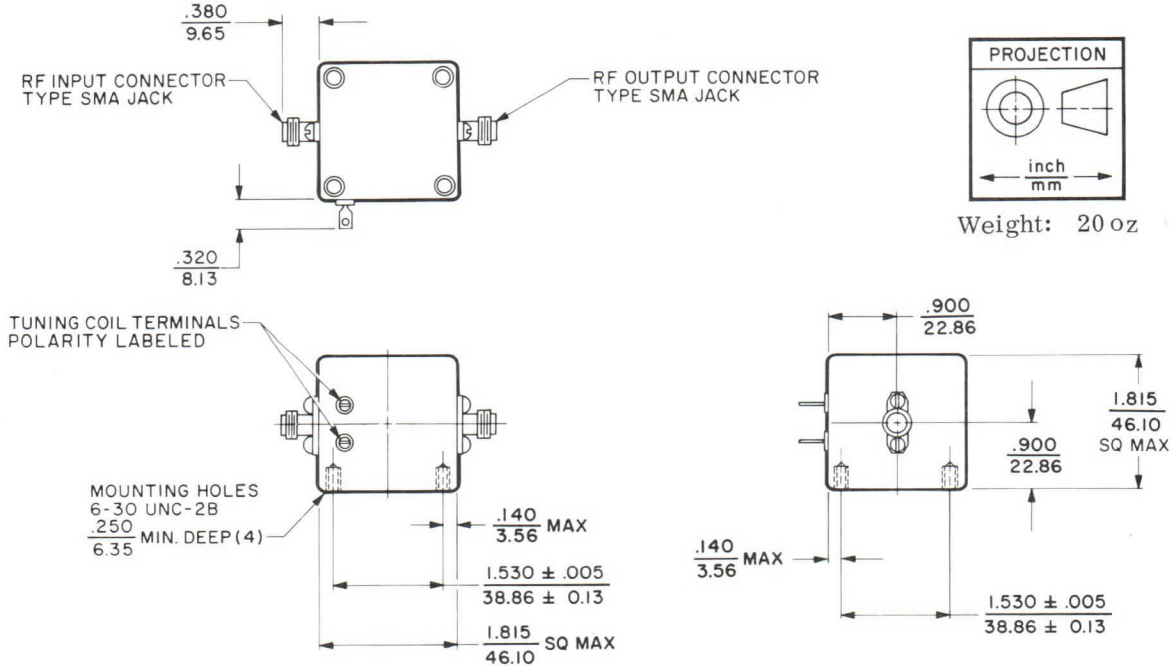

Weight: 20 oz

212M & 212M-1

varian
solid state west division

TECHNICAL DATA

220 Series

DUAL TWO-STAGE YIG-TUNED FILTERS

0.5-18.0 GHz

Formerly RYKA 220 Series

DESCRIPTION

Varian 220 Series dual, two-stage, YIG-tuned, bandpass filters are electrically-tunable, low-insertion-loss microwave filters for use in systems requiring stable performance under widely-varying ambient environmental conditions. Each of these compact solid-state devices is equipped with a small, efficient, self-regulating, positive temperature-control element which maintains the YIG spheres at approximately 85 °C for maximum passband response stability. They are ideal pre-postselectors in amplifier and parallel-channel systems, where stable frequency correlation is essential. Each model incorporates a magnetic circuit which is effectively shielded from local magnetic fields.

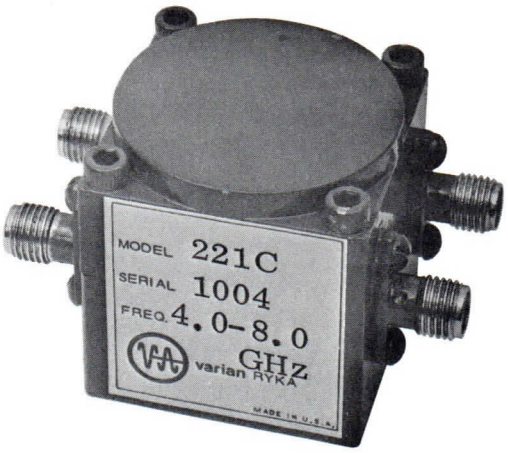

RF PERFORMANCE [1,2]

Frequency Range (GHz)	Insertion Loss (dB) Ch 1	Insertion Loss (dB) Ch 2	3-dB Bandwidth (MHz)	Minimum Off Resonance Spurious (dB)	Frequency Drift (MHz) Typ	Frequency Drift (MHz) Max	Model Number
0.5-1.0	4	4	25 ± 5	45	5	10	221P
0.5-1.0	4	4	25 ± 5	45	5	8	223P
1.0-2.0	3	3	25 ± 5	45	4	8	221L
1.0-2.0	3	3	25 ± 5	45	4	6	223L
2.0-4.0	3	3	25 ± 5	30	4	8	221S
2.0-4.0	3	3	25 ± 5	30	4	6	222S
4.0-8.0	2.5	2.5	35 ± 5	30	5	10	221C
4.0-8.0	2.5	2.5	35 ± 5	30	5	10	222C
8.0-12.4	2.5	2.5	40 ± 10	30	6	12	221X
8.0-12.4	2.5	2.5	40 ± 10	30	6	10	222X
12.4-18.0	2.5	2.5	45 ± 10	30	6	12	221Ku
12.4-18.0	2.5	2.5	45 ± 10	30	6	10	222Ku

Passband Spurious and Ripple ..... < 1.5 dB
Frequency Selectivity 12 dB/oct
Isolation
Between Channels > 70 dB

Limiting Level ..... ≥ 10 dBm
Off Resonance Isolation > 55 dB
Passband VSWR[4] ..... < 2:1
Tracking Error Between Channels
Typical ..... 2-3 MHz
Maximum[5] ..... 4 MHz

TUNING COIL CHARACTERISTICS [1,2]

Tuning Sensitivity (MHz/mA)	Resistance (Ω)	Inductance (mH)	Linearity (± MHz)	Hysteresis (MHz)	Model Number
13	10	40	2	2	221P
13	10	40	2	2	223P
13	10	40	2	4	221L
13	10	40	2	4	223L
13	10	40	3	4	221S
13	10	40	3	4	222S
13	10	40	5	6	221C
13	10	40	5	6	222C
17	10	75	8	12	221X
17	10	75	8	12	222X
22	10	110	10	18	221Ku
22	10	110	10	18	222Ku

PARAMETER DEFINITIONS

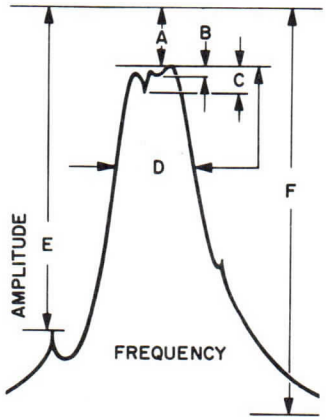

A. Insertion Loss - Loss in excess of straight transmission.

B. Pass Band Ripple - Over coupling variations in peak response of pass band.

C. Pass Band Spurious - Magnetostatic mode pass band interference.

D. Bandwidth - Half power (3 dB) width of response when measured from peak.

E. Off Resonance Spurious - Spurious modes of magnetostatic modes down to a total of 5 dB affecting skirt response.

F. Off Resonance Isolation - Attenuation outside band of filter response.

2951 2/73

Printed in U.S.A.

NOTES:

1. R-f performance and tuning coil characteristic values are based on performance tests. These figures may change without notice as a result of additional data or product refinement. Consult Varian Solid State West Division before using this information for final equipment design.

2. 222 and 223 Models operate over a temperature range of 0 to +50 °C; 221 Models operate over wider ranges and can be furnished for operation from -55 to +85 °C. 221 and 223 Models, except Ku-band versions, are equipped with 20-30 volt, 1.5 watt d-c heaters to stabilize passband response; 222 Models and Ku-band versions have no heaters.

3. Models having wider or narrower bandwidths can be furnished on special order. Narrow-bandwidth filters have slightly greater insertion loss.

4. Measured near center of passband.

5. For Ku-band models, the maximum value is 6 megahertz.

OUTLINE DRAWINGS

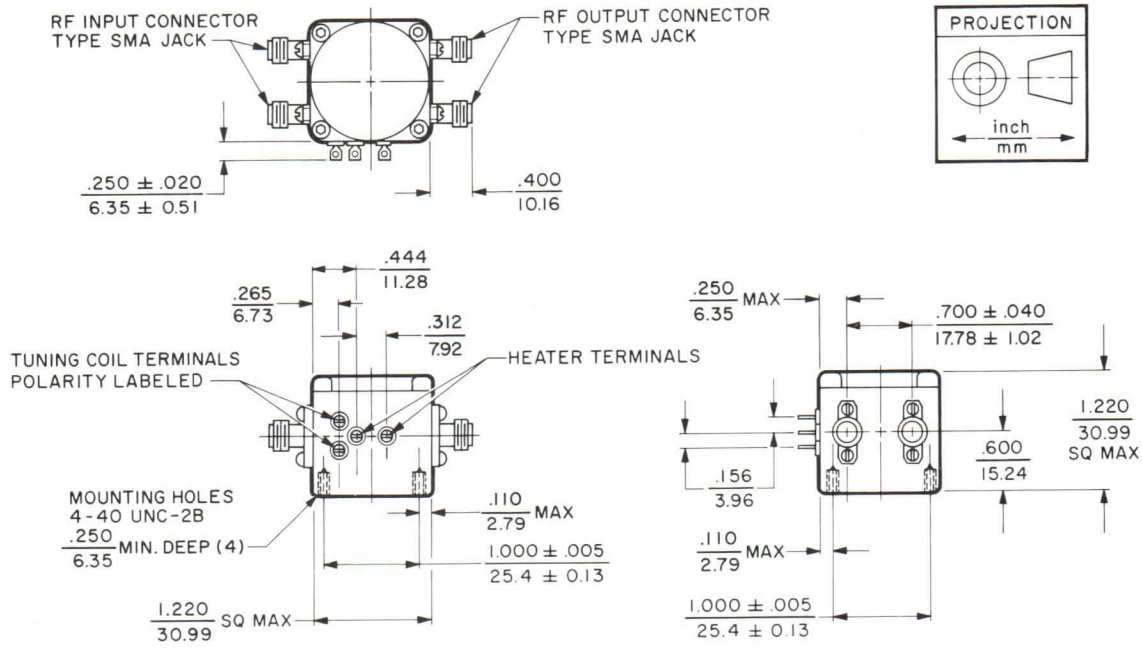

P-, L-, & S-BAND MODELS

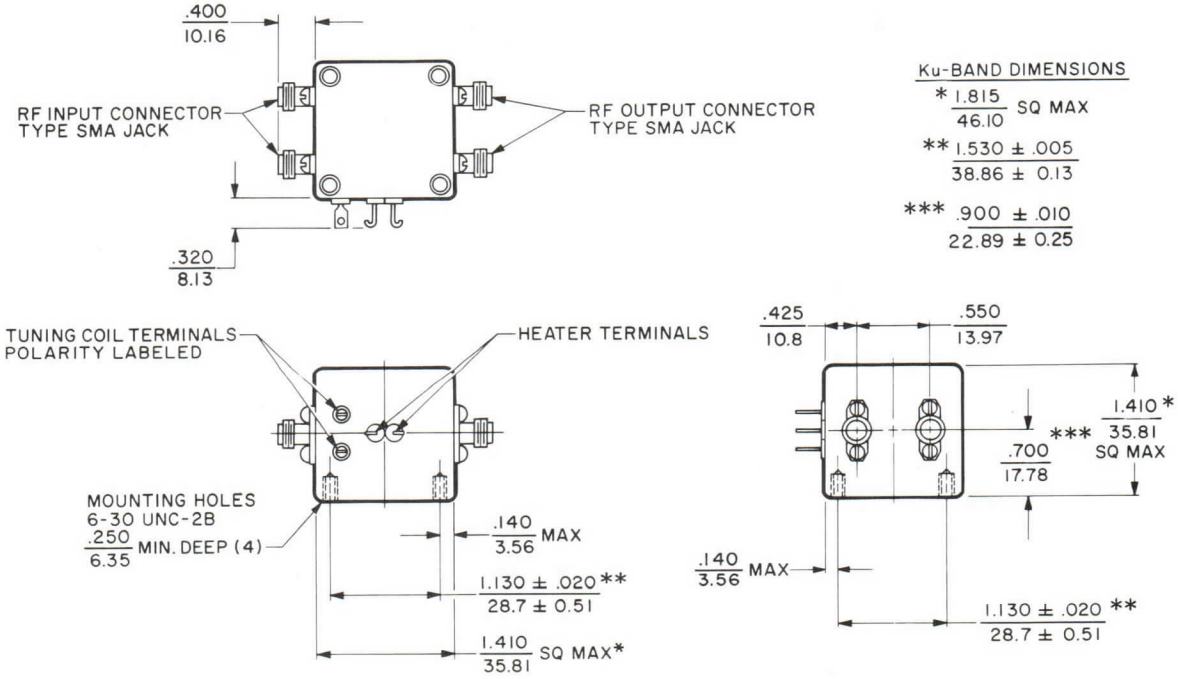

C-, X- & Ku-BAND MODELS

varian
solid state west division

TECHNICAL DATA

300 Series

THREE-STAGE YIG-TUNED FILTERS

0.5-18.0 GHz

Formerly RYKA 300 Series

DESCRIPTION

Varian 300 Series three-stage, YIG-tuned bandpass filters are electrically-tunable, low-insertion-loss microwave filters for use in systems requiring stable performance under widely-varying ambient environmental conditions. Off-resonance isolation is greater than 65 dB with a nominal skirt selectivity of 18 dB per octave. These compact solid-state filters combine outstanding tuning accuracy and linearity with low hysteresis, making them ideal choices for preselector applications from 500 megahertz to 18 gigahertz. Each model incorporates a magnetic circuit which is effectively shielded from local magnetic fields.

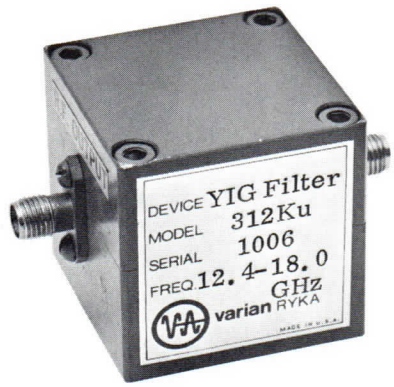

RF PERFORMANCE [1,2]

Frequency Range (GHz)	Insertion Loss (dB)	3-dB Bandwidth [2] (MHz)	Minimum Off Resonance Spurious (dB)	Frequency Drift (MHz) Typ	Frequency Drift (MHz) Max	Model Number
0.5-1.0	6	25 ± 5	60	5	10	311P
0.5-1.0	5	25 ± 5	60	5	8	313P
1.0-2.0	4	25 ± 5	60	4	8	311L
1.0-2.0	3	25 ± 5	60	4	6	313L
2.0-4.0	3.5	25 ± 5	50	4	8	311S
2.0-4.0	3	25 ± 5	50	4	6	312S
4.0-8.0	3	35 ± 10	50	5	10	311C
4.0-8.0	2.5	35 ± 10	50	5	10	312C
8.0-12.4	3	40 ± 10	50	6	12	311X
8.0-12.4	2.5	40 ± 10	50	6	10	312X
12.4-18.0	3	45 ± 10	50	6	12	311Ku
12.4-18.0	2.5	45 ± 10	50	6	10	312Ku

Passband Spurious and Ripple ..... < 1.5 dB
Frequency Selectivity 18 dB/oct
Limiting Level ..... 10 dBm
Off Resonance Isolation > 65 dB
Passband VSWR [4] ..... < 2:1

TUNING COIL CHARACTERISTICS [1,2]

Tuning Sensitivity (MHz/mA)	Resistance at 25°C (Ω)	Inductance (mH)	Linearity (± MHz)	Hysteresis (MHz)	Model Number
13	10	40	2	2	311P
13	10	40	2	2	313P
13	10	40	2	4	311L
13	10	40	2	4	313L
13	10	40	3	4	311S
13	10	40	3	4	312S
13	10	40	5	6	311C
13	10	40	5	6	312C
17	10	75	8	12	311X
17	10	75	8	12	312X
22	10	100	10	18	311Ku
22	10	100	10	18	312Ku

PARAMETER DEFINITIONS

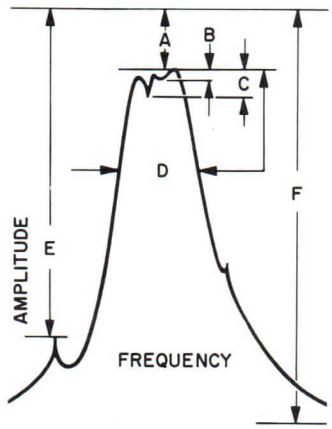

A. Insertion Loss - Loss in excess of straight transmission.

B. Pass Band Ripple - Over coupling variations in peak response of pass band.

C. Pass Band Spurious - Magnetostatic mode pass band interference.

D. Bandwidth - Half power (3 dB) width of response when measured from peak.

E. Off Resonance Spurious - Spurious modes of magnetostatic modes down to a total of 5 dB affecting skirt response.

F. Off Resonance Isolation - Attenuation outside band of filter response.

2937 1/73

Printed in U.S.A.

NOTES:

1. R-f performance and tuning coil characteristic values are based on performance tests. These figures may change without notice as the result of additional data or product refinement. Consult Varian Solid State Division-West before using this information for final equipment design.
2. 312 and 313 Models operate over a temperature range of 0 to +50 °C; 311 Models operate over wider ranges and can be furnished for operation from -55 to +85 °C. 311 and 313 Models are equipped with 20-30 volt, 1.5 watt d-c heaters to stabilize passband response; 312 Models have no heaters.
3. Models having wider or narrower bandwidths can be furnished on special order. Narrow-bandwidth filters have slightly greater insertion loss.
4. Measured near center of passband.

OUTLINE DRAWINGS

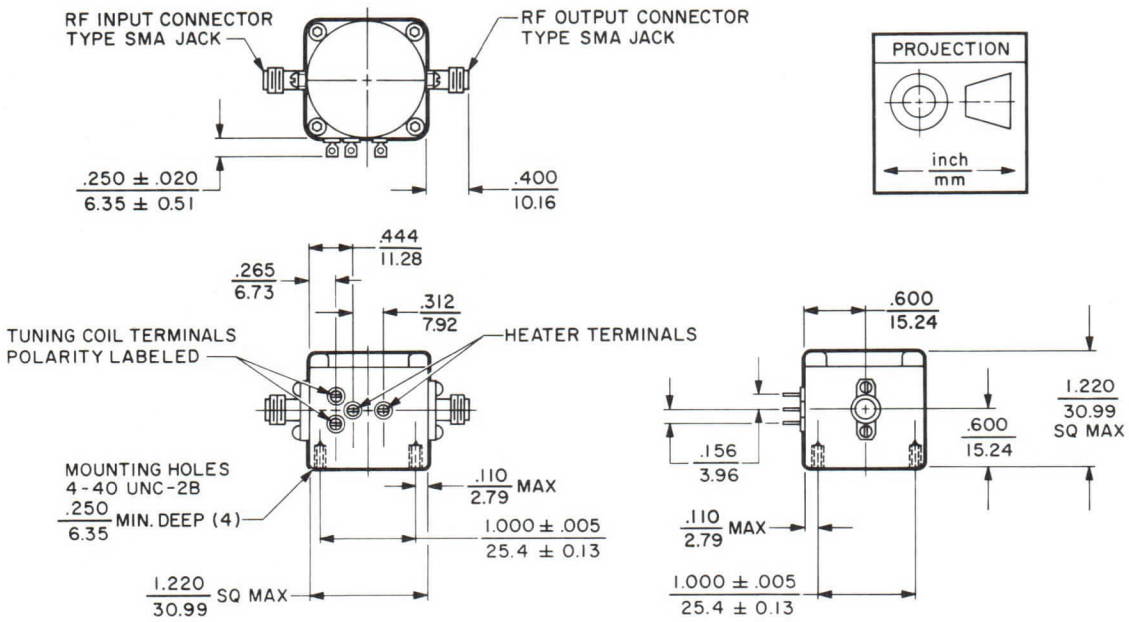

P-, L-, & S-BAND MODELS

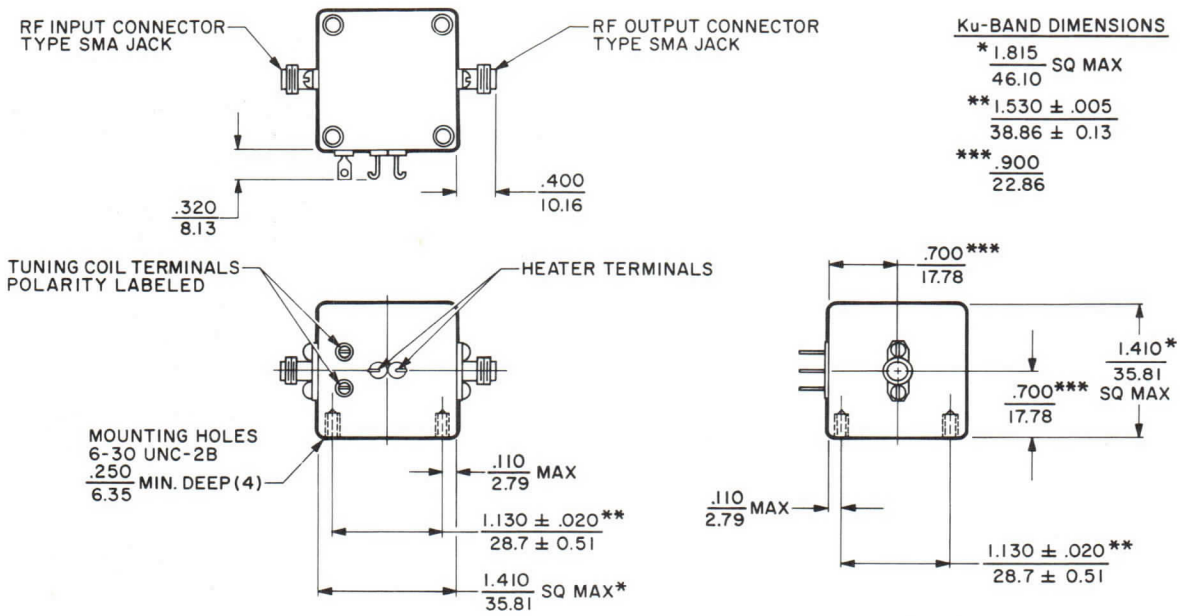

C-, X- & Ku-BAND MODELS

varian
solid state west division

TECHNICAL DATA

BR-300
Series
THREE-STAGE YIG-TUNED BAND-REJECT FILTERS
1-18 GHz

DESCRIPTION

Varian BR-300 Series three-stage, YIG-tuned band-reject filters are electrically tunable, low-insertion-loss microwave filters for use in systems requiring stable performance under widely-varying ambient environmental conditions. These compact solid-state filters combine outstanding tuning accuracy and linearity with low hysteresis, making them ideal choices for wide-open front-end applications where signal rejection of image or strong spurious signals are required.

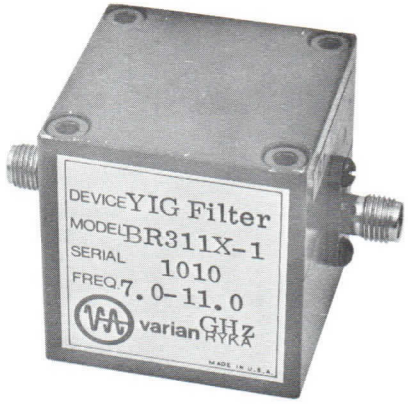

RF PERFORMANCE AND TUNING COIL CHARACTERISTICS[1,2]

Frequency Range (GHz)	Bandwidth (MHz)		Frequency Drift (MHz)		Tuning Sensitivity (MHz/mA)	Coil Inductance (mH)	Linearity (± MHz)	Model Number
	3-dB	30-dB	Typ	Max				
1-2	20 ± 5	5	3	6	13	40	2	BR-311L
1-2	20 ± 5	5	3	6	13	40	2	BR-313L
2-4	20 ± 5	5	4	8	13	40	3	BR-311S
2-4	20 ± 5	5	3	6	13	40	3	BR-312S
4-8	25 ± 5	5	5	8	13	40	5	BR-311C
4-8	25 ± 5	5	4	6	13	40	5	BR-312C
8.0-12.4	30 ± 10	5	6	12	17	75	8	BR-311X
8.0-12.4	30 ± 10	5	6	12	17	75	8	BR-312X
12.4-18.0	30 ± 10	5	8	12	17	75	10	BR-311Ku
12.4-18.0	30 ± 10	5	8	12	17	75	10	BR-312Ku

Frequency Selectivity ..... 18 dB/oct
Insertion Loss, typ ..... 0.5 dB
Insertion Loss, max ..... 1.0 dB
Passband Spurious, max ..... 2.5 dB

Band Rejection, min ..... 30 dB
Passband VSWR, typ 1.35:1
Coil Resistance, at 25° C ..... 10 Ω

NOTES:

1. R-f performance and tuning-coil characteristic values are based on performance tests. These figures may change without notice as the result of additional data or product refinement. Consult Varian Solid State West Division before using this information for final equipment design.

2. BR-312 and BR-313 Models operate over a temperature range of 0 to 50° C; BR-311 Models operate over wider ranges and can be furnished for operation from -55 to +85° C. BR-311 and BR-313 Models are equipped with 20-30 volt, 1.5 watt d-c heaters to stabilize passband response; BR-312 Models have no heaters.

3002 5/73

Printed in U.S.A.

OUTLINE DRAWINGS

L-, S-, & C-BAND MODELS

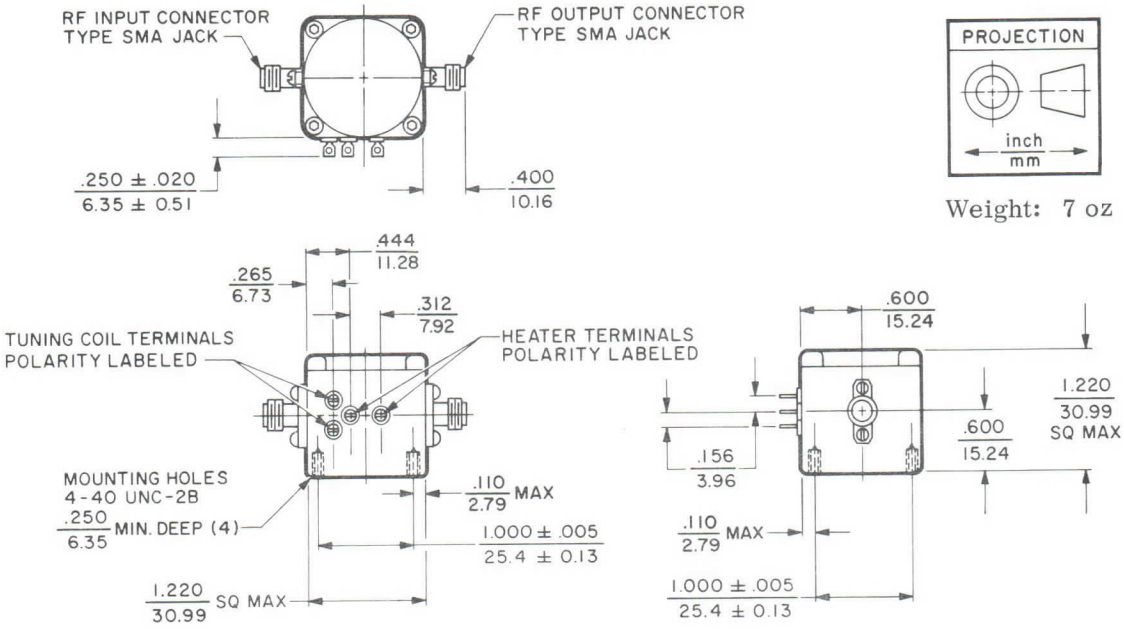

X-, & Ku-BAND MODELS

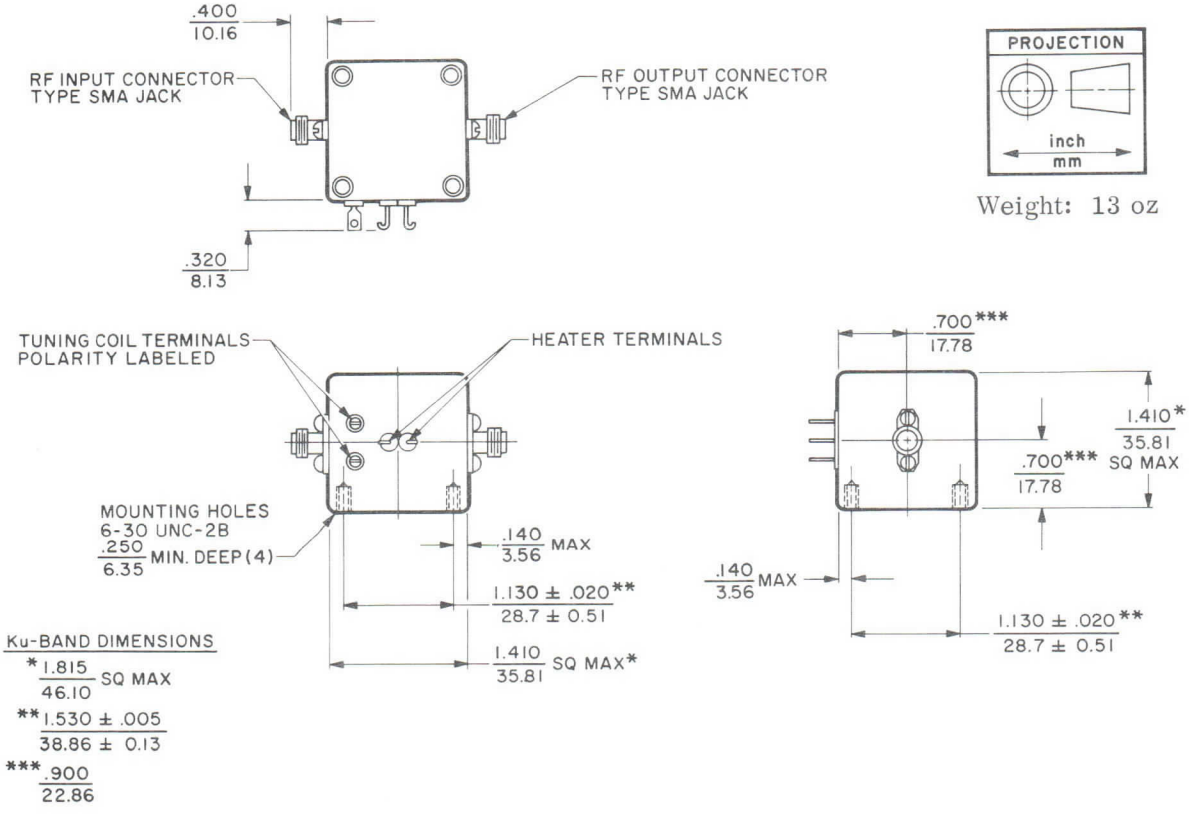

Ku-BAND DIMENSIONS

*1.815
46.10 SQ MAX

**1.530 ± .005
38.86 ± 0.13

***.900
22.86

varian
solid state west division

TECHNICAL DATA

300M
Series
THREE-STAGE
MULTIOCTAVE
YIG-TUNED FILTERS
1-18 GHz

Formerly RYKA 312MS Series

DESCRIPTION

Varian 300M Series three-stage, YIG-tuned, bandpass filters are electrically-tunable, low-insertion-loss multioctave filters for use in test equipment, laboratory signal-sorting components and as a preselector in multioctave range receivers. These compact solid-state devices provide outstanding tuning accuracy, linearity, temperature drift and low hysteresis, making them ideal choices for applications between 1 to 18 gigahertz. Each model incorporates a magnetic circuit which is completely shielded from local magnetic fields.

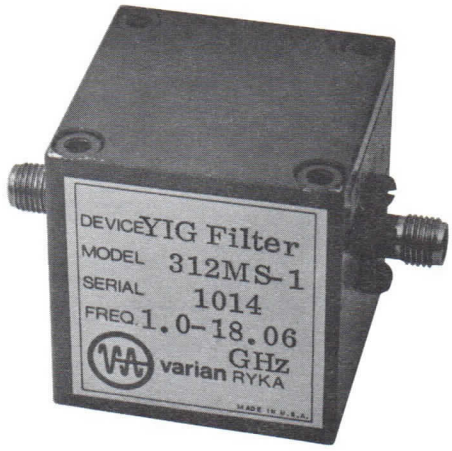

RF PERFORMANCE [1,2]

Frequency Range (GHz)	Insertion Loss [3] (dB)	3-dB Bandwidth [4] (MHz)	Limiting Level [5] (dBm)	Frequency Drift [6] (MHz) Typ	Frequency Drift [6] (MHz) Max	Model Number [7]
1.0-12.4	8	15-60	+10	8	15	312MS-1
1.0-18.0	8	15-60	+10	12	20	312M-1
2.0-12.4	5	20-50	-25 (1.0-1.8 GHz) +10 (1.8-12.4 GHz)	8	15	312MS
2.0-18.0	5	20-70	-25 (1.0-1.8 GHz) +10 (1.8-18.0 GHz)	12	20	312M

Passband Spurious and Ripple ..... <2.5 dB
Frequency Selectivity 18 dB/oct
Off Resonance Isolation ..... >65 dB
Off Resonance Spurious [8] ..... >60 dB

TUNING COIL CHARACTERISTICS [1,2]

Tuning Sensitivity (MHz/mA)	Resistance (Ω)	Inductance (mH)	Linearity (± MHz)	Hysteresis [9] (MHz)	Model Number
17	10	80	8	14	312MS-1
22	10	100	10	16	312M-1
17	10	80	8	14	312MS
22	10	100	10	16	312M

PARAMETER DEFINITIONS

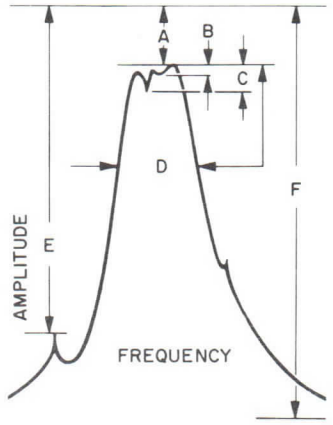

A. Insertion Loss - Loss in excess of straight transmission.

B. Pass Band Ripple - Over coupling variations in peak response of pass band.

C. Pass Band Spurious - Magnetostatic mode pass band interference.

D. Bandwidth - Half power (3 dB) width of response when measured from peak.

E. Off Resonance Spurious - Spurious modes of magnetostatic modes down to a total of 5 dB affecting skirt response.

F. Off Resonance Isolation - Attenuation outside band of filter response.

3020 5/73

Printed in U.S.A.

NOTES:

1. R-f performance and tuning coil characteristic values are based on performance tests. These figures may change without notice as the result of additional data or product refinement. Consult the Varian Solid State West Division before using this information for final equipment design.
2. The models listed operate over the temperature range of 0 to 50 °C. Models operating over wider temperature ranges are also available. Consult the Varian Solid State West Division for specific applications.
3. Insertion loss is typically less than 4 dB from 1.8 to 12.4 GHz but may be slightly greater than 5 dB from 1.0 to 1.8 GHz.
4. Models having wider or narrower bandwidths can be furnished on special order. Narrow-bandwidth filters have slightly greater insertion loss.
5. The frequency of the onset of limiting is temperature dependent. Typical values are for 25 °C.
6. Frequency drift with temperature at frequency extremes will be greater and may not have the same sign.
7. Models operating up to 12.4 GHz can be supplied with either Type N or SMA connectors; models operating to 18 GHz are equipped only with SMA connectors.
8. 210 mode spacing is less than 420 MHz from the center of the main passband.
9. Hysteresis is measured at midband after tuning over the entire frequency range. Narrower tuning excursions will have proportionally less hysteresis.

OUTLINE DRAWINGS

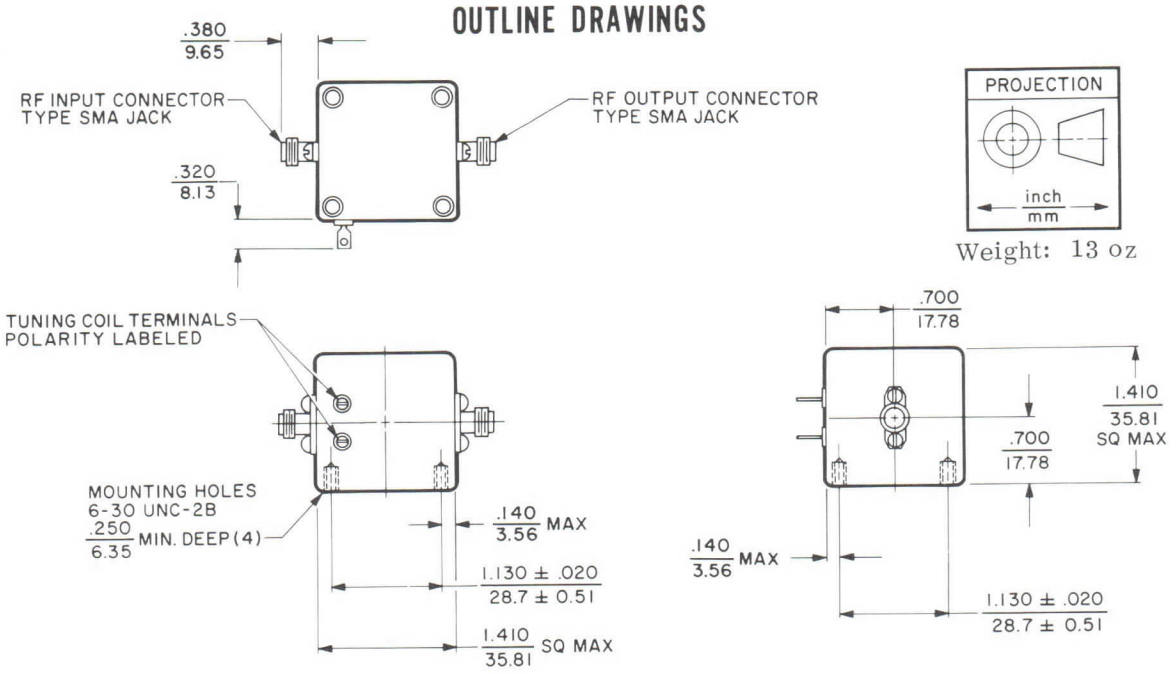

312MS &312MS-1

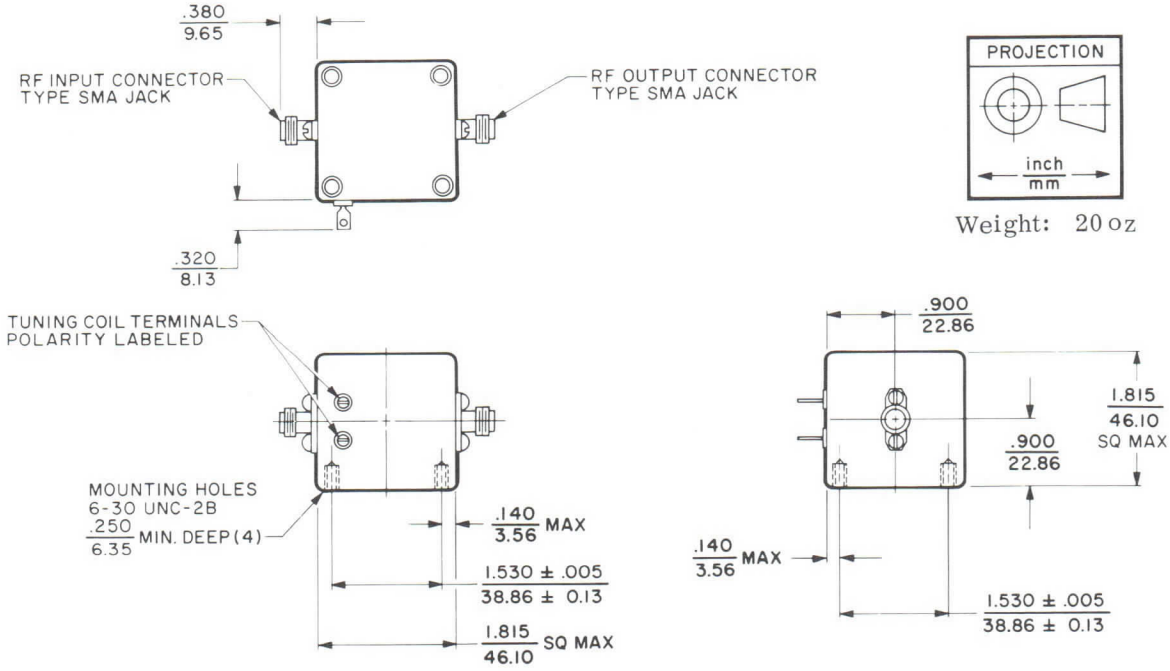

312M & 312M-1

varian
solid state west division

TECHNICAL DATA

400 Series

FOUR-STAGE YIG-TUNED FILTERS 0.5-18.0 GHz

Formerly RYKA 400 Series

DESCRIPTION

Varian 400 Series four-stage, YIG-tuned filters are electrically-tunable, low-insertion-loss, microwave bandpass filters. They combine outstanding overall tuning accuracy and linearity with low hysteresis, making them ideal for preselector use in TACAN, electronic-warfare, and surveillance receivers operating between 500 megahertz and 18 gigahertz. Frequency selectivity of 24 dB/octave, 70 dB off-resonance isolation, and low off-resonance spurs provide maximum image and LO rejection. Sturdy, compact construction permits operation in severe environments. Each filter is effectively shielded from local magnetic fields.

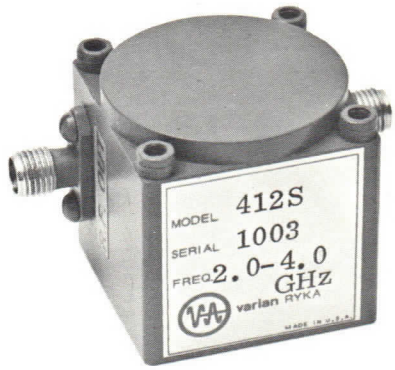

RF PERFORMANCE [1,2]

Frequency Range (GHz)	Insertion Loss (dB)	3-dB Bandwidth [3] (MHz)	Minimum Off Resonance Spurious (dB)	Frequency Drift (MHz)		Model Number
				Typ	Max	
0.5-1.0	8	25 ± 5	70	5	10	411P
0.5-1.0	6	25 ± 5	70	5	8	413P
1.0-2.0	4.5	25 ± 5	70	4	8	411L
1.0-2.0	4.0	25 ± 5	70	4	6	413L
2.0-4.0	4	25 ± 5	60	4	8	411S
2.0-4.0	4	25 ± 5	60	4	6	412S
4.0-8.0	4	35 ± 10	60	5	10	411C
4.0-8.0	4	35 ± 10	60	5	10	412C
8.0-12.4	4	40 ± 10	60	6	12	411X
8.0-12.4	4	40 ± 10	60	6	10	412X
12.4-18.0	4.5	45 ± 10	60	6	12	411Ku
12.4-18.0	4.0	45 ± 10	60	6	10	412Ku

Passband Spurious and Ripple [4] ..... <1.5 dB
Frequency Selectivity 24 dB/oct
Limiting Level ..... ≥10 dBm
Off Resonance Isolation ≥70 dB
Passband VSWR [5] ..... <2:1

TUNING COIL CHARACTERISTICS [1,2]

Tuning Sensitivity (MHz/mA)	Resistance at 25 °C (Ω)	Inductance (mH)	Linearity (± MHz)	Hysteresis (MHz)	Model Number
13	10	40	2	2	411P
13	10	40	2	2	413P
13	10	40	2	4	411L
13	10	40	2	4	413L
13	10	40	3	4	411S
13	10	40	3	4	412S
13	10	40	5	6	411C
13	10	40	5	6	412C
17	10	75	8	12	411X
17	10	75	8	12	412X
22	10	100	10	18	411Ku
22	10	100	10	18	412Ku

PARAMETER DEFINITIONS

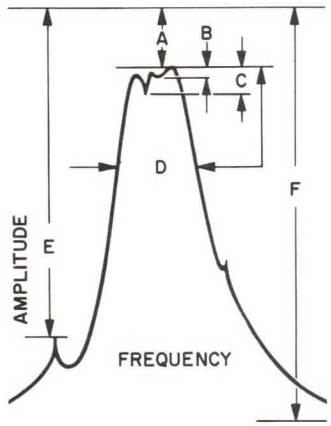

A. Insertion Loss - Loss in excess of straight transmission.

B. Pass Band Ripple - Over coupling variations in peak response of pass band.

C. Pass Band Spurious - Magnetostatic mode pass band interference.

D. Bandwidth - Half power (3 dB) width of response when measured from peak.

E. Off Resonance Spurious - Spurious modes of magnetostatic modes down to a total of 5 dB affecting skirt response.

F. Off Resonance Isolation - Attenuation outside band of filter response.

2938 1/73

Printed in U.S.A.

NOTES:

1. R-f performance and tuning coil characteristic values are based on performance tests. These figures may change without notice as the result of additional data or product refinement. Consult Varian Solid State West Division before using this information for final equipment design.

2. 412 and 413 Models operate over a temperature range of 0 to +50 °C; 411 Models operate over wider ranges and can be furnished for operation from -55 to +85 °C. 411 and 413 Models are equipped with 20-30 volt, 1.5 watt d-c heaters to stabilize passband response; 412 Models and the 411Ku have no heaters.

3. Models having wider or narrower bandwidths can be furnished on special order. Narrow-bandwidth filters have slightly greater insertion loss.

4. Models 411P and 413P passband spurious and ripple is less than 2 dB.

5. Measured near center of passband.

OUTLINE DRAWINGS

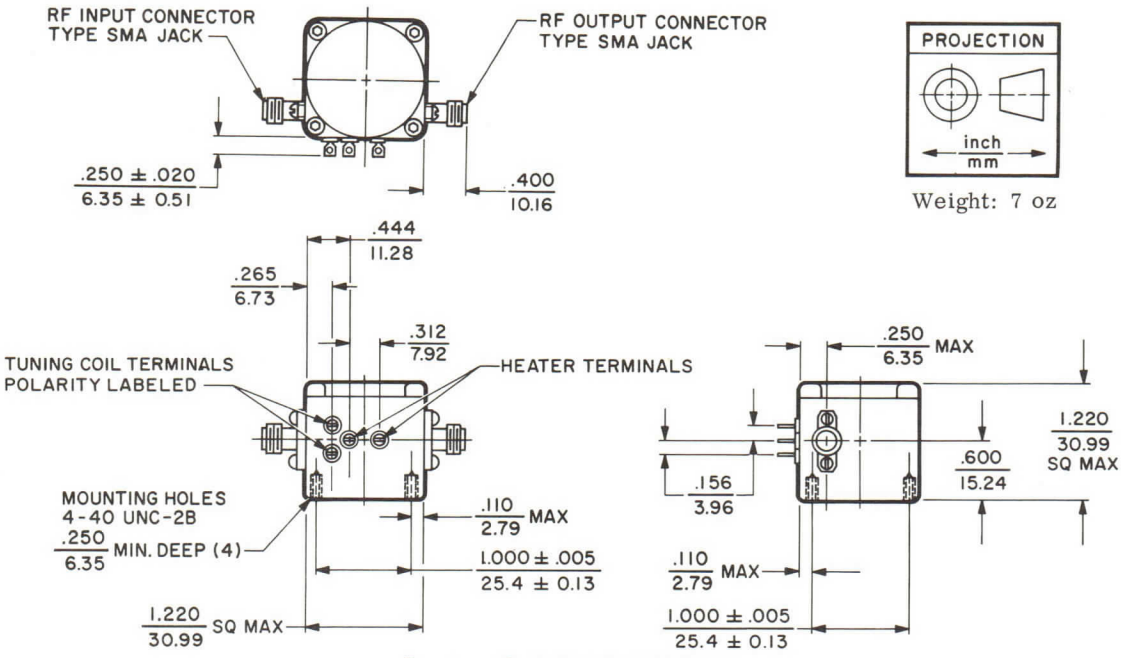

P-, L-, & S-BAND MODELS

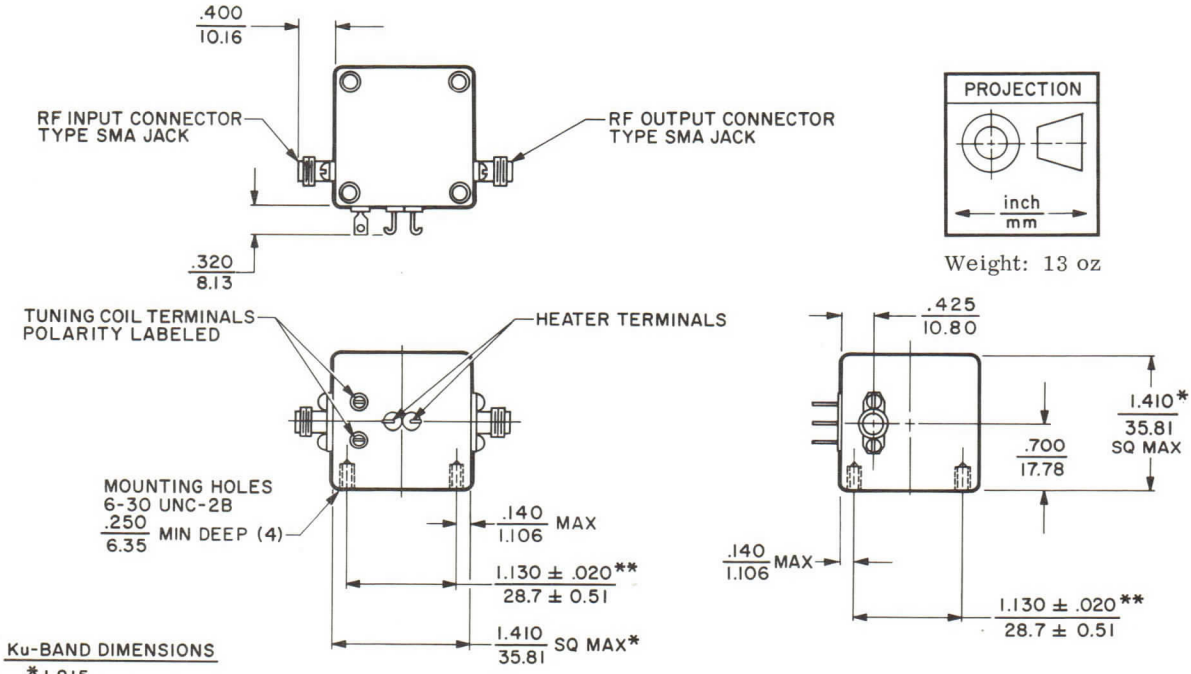

Ku-BAND DIMENSIONS

*1.815 / 46.10 SQ MAX

**1.530 ± .005 / 38.86 ± 0.13

C-, X- & Ku-BAND MODELS

varian
solid state west division

TECHNICAL DATA

400M
Series
FOUR-STAGE
MULTIOCTAVE
YIG-TUNED FILTERS
1-18 GHz

Formerly RYKA 412MS Series

DESCRIPTION

Varian 400M Series four-stage, YIG-tuned, bandpass filters are electrically-tunable, low-insertion-loss multioctave filters for use in test equipment, laboratory signal-sorting components and as a preselector in multioctave range receivers. These compact solid-state devices provide outstanding tuning accuracy, linearity, temperature drift and low hysteresis, making them ideal choices for applications between 1 to 18 gigahertz. Each model incorporates a magnetic circuit which is completely shielded from local magnetic fields.

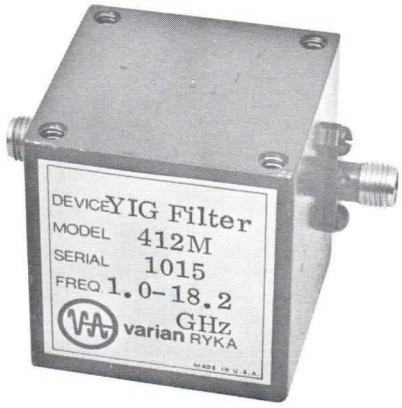

RF PERFORMANCE [1,2]

Frequency Range (GHz)	Insertion Loss [3] (dB)	3-dB Bandwidth [4] (MHz)	Limiting Level [5] (dBm)	Frequency Drift [6] (MHz) Typ	Frequency Drift [6] (MHz) Max	Model Number [7]
1.0-12.4	8	15-60	+10	8	15	412MS-1
1.0-18.0	8	15-70	+10	12	20	412M-1
2.0-12.4	6	20-50	-25 (1.0-1.8 GHz) +10 (1.8-12.4 GHz)	8	15	412MS
2.0-18.0	6	20-70	-25 (1.0-1.8 GHz) +10 (1.8-18.0 GHz)	12	20	412M

Passband Spurious and Ripple ..... <2.5 dB
Frequency Selectivity 24 dB/oct
Off Resonance Isolation ..... >65 dB
Off Resonance Spurious [8] ..... >60 dB

TUNING COIL CHARACTERISTICS [1,2]

Tuning Sensitivity (MHz/mA)	Resistance (Ω)	Inductance (mH)	Linearity (± MHz)	Hysteresis [9] (MHz)	Model Number
17	10	80	8	14	412MS-1
22	10	100	10	16	412M-1
17	10	80	8	14	412MS
22	10	100	10	16	412M

PARAMETER DEFINITIONS

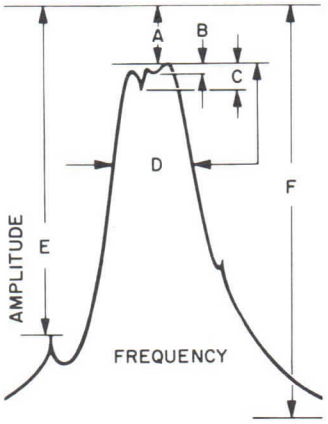

A. Insertion Loss - Loss in excess of straight transmission.

B. Pass Band Ripple - Over coupling variations in peak response of pass band.

C. Pass Band Spurious - Magnetostatic mode pass band interference.

D. Bandwidth - Half power (3 dB) width of response when measured from peak.

E. Off Resonance Spurious - Spurious modes of magnetostatic modes down to a total of 5 dB affecting skirt response.

F. Off Resonance Isolation - Attenuation outside band of filter response.

3019 5/73

Printed in U.S.A.

NOTES:

1. R-f performance and tuning coil characteristic values are based on performance tests. These figures may change without notice as the result of additional data or product refinement. Consult the Varian Solid State West Division before using this information for final equipment design.
2. The models listed operate over the temperature range of 0 to 50 °C. Models operating over wider temperature ranges are also available. Consult the Varian Solid State West Division for specific applications.
3. Insertion loss is typically less than 4 dB from 1.8 to 12.4 GHz but may be slightly greater than 5 dB from 1.0 to 1.8 GHz.
4. Models having wider or narrower bandwidths can be furnished on special order. Narrow-bandwidth filters have slightly greater insertion loss.
5. The frequency of the onset of limiting is temperature dependent. Typical values are for 25 °C.
6. Frequency drift with temperature at frequency extremes will be greater and may not have the same sign.
7. Models operating up to 12.4 GHz can be supplied with either Type N or SMA connectors; models operating to 18 GHz are equipped only with SMA connectors.
8. 210 mode spacing is less than 420 MHz from the center of the main passband.
9. Hysteresis is measured at midband after tuning over the entire frequency range. Narrower tuning excursions will have proportionally less hysteresis.

OUTLINE DRAWINGS

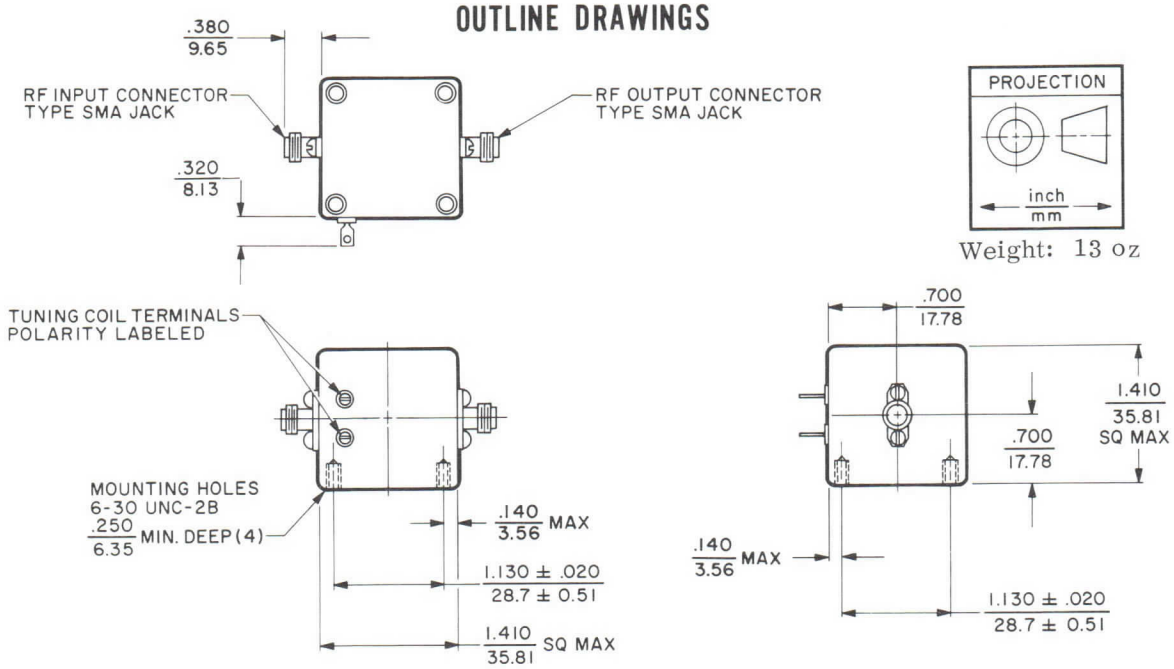

Weight: 13 oz

412MS & 412MS-1

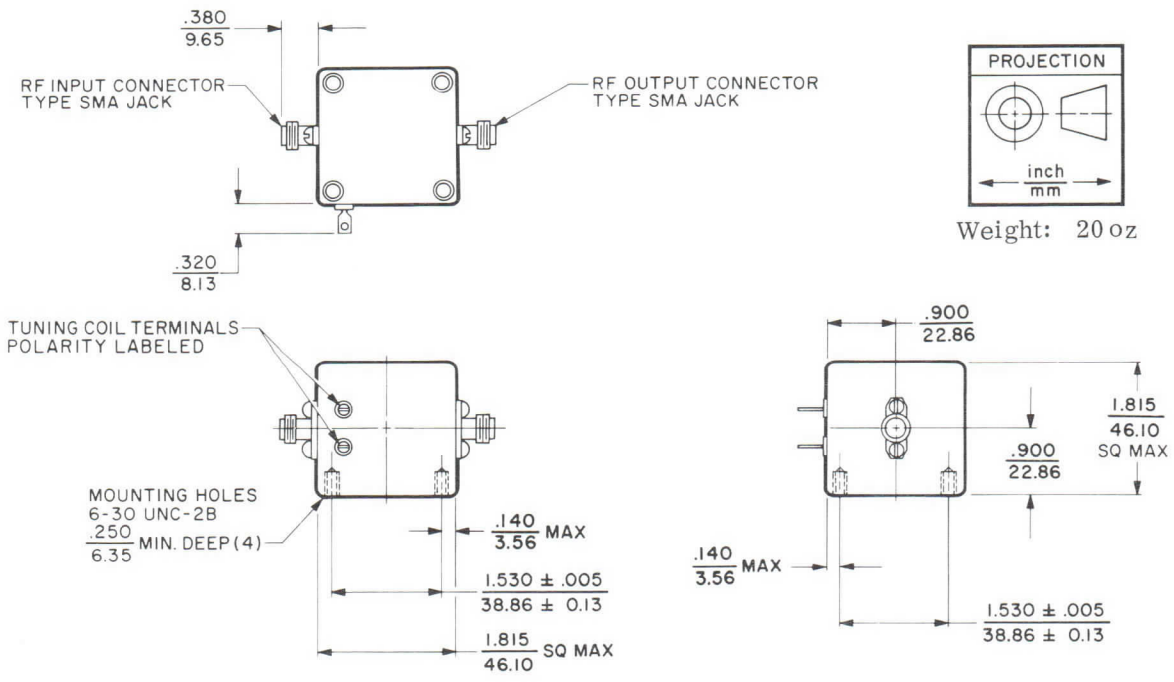

Weight: 20 oz

412M & 412M-1

varian

TECHNICAL DATA

VCC-600 Series

MICROWAVE CHIP CAPACITORS

FEATURES

- Wide range of capacitances
- Low-loss performance
- Excellent stability over wide temperature ranges
- High blocking voltages
- Ultra-pure dielectric
- Pure gold contacts for bonding ease

DESCRIPTION

VCC series chip capacitors are extremely small capacitors for use in large quantities in microwave integrated circuits (MICs) as bypass capacitors, etc. The series provides a very wide range of capacitances and outstanding low-loss performance at frequencies up through high Ku band. The ultra-pure dielectric employed produces excellent performance stability over wide temperature ranges as well as high blocking voltages. Their small size minimizes circuit discontinuities.

Each contact surface has a layer of pure gold for bonding purposes. Chip metallization withstands temperatures as high as 400°C, which is more than adequate for normal bonding and lead attachment means. Although the preferred method of die bonding is soldering with preforms such as AuGe, AuSn, or AuSi, conductive-epoxy or thermo-compression bonding techniques may be employed. For best results, bonding should be performed in an inert atmosphere and the entire circuit sealed. The seal can vary from a very simple dust seal to a full hermetic seal.

NOTES:

1. Characteristic values are based on performance tests. These figures may change without notice as a result of additional data or product refinement. Consult the Varian Beverly Division before using this information for final equipment design.
2. The standard capacitance tolerance is ±20%. However, individual capacitors can be machined to within ±3%.

OUTLINE DRAWING

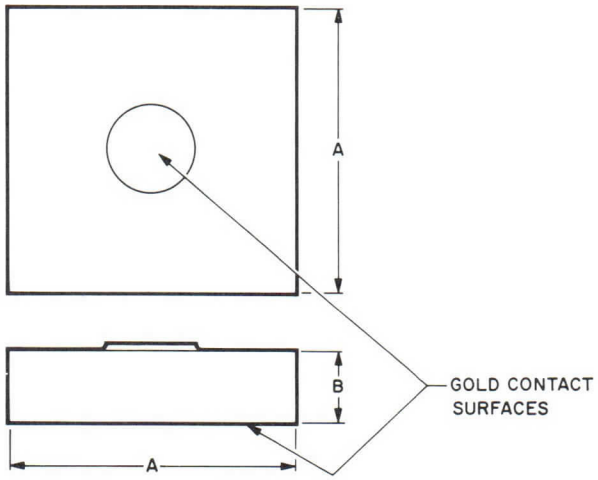

DIMENSIONS				TYPE NUMBER
A		B		
IN	MM	IN	MM	
.020 or .030	.508 or .762	.005	.127	VCC-600
.020 or .030	.508 or .762	.005	.127	VCC-601
.020 or .030	.508 or .762	.005	.127	VCC-602
.020 or .030	.508 or .762	.005	.127	VCC-603
.030	.762	.005	.127	VCC-604
.040	1.02	.005	.127	VCC-605
.050	1.27	.005	.127	VCC-606
.060	1.52	.005	.127	VCC-607
.070	1.78	.005	.127	VCC-608

GENERAL CHARACTERISTICS [1]

Capacitance [2] (pF)	Blocking Voltage (Vdc)	Type Number
5 - 24.9	70	VCC-600
25 - 49.9	70	VCC-601
50 - 74.9	70	VCC-602
75 - 99.9	50	VCC-603
100 - 125.0	50	VCC-604
125 - 249.9	50	VCC-605
250 - 499.9	50	VCC-606
500 - 749.9	50	VCC-607
750 - 1000	50	VCC-608

3553 6/76

Printed in U.S.A.

varian

PRELIMINARY
TECHNICAL DATA

VZ-3002
Series

MICROWAVE TUNERS

0.5-40.0 GHz

FEATURES

- Small size and light weight
- Low power consumption
- Linear broadband tuning
- Wide SFDR
- Excellent tracking versus temperature
- Octave scan rates to 400 hertz
- Ideal for remote locations
- Excellent reliability and long life

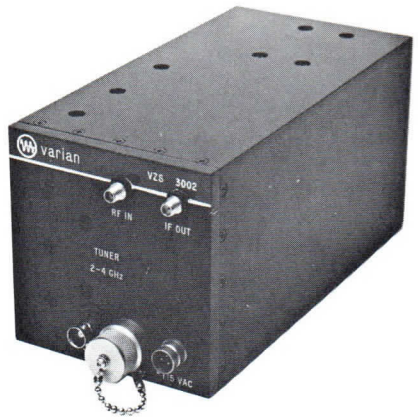

DESCRIPTION

Varian VZ-3002 Series microwave tuners are all solid-state, electronically-tuned, subminiature, receiver front-ends for use in surveillance systems. Each tuner includes a preselector YIG filter, a YIG-tuned transistor local oscillator which tracks the filter center frequency, a balanced mixer, and a low-noise IF preamplifier combined in a small, lightweight package. The integrated RF-IF design significantly reduces overall cost, size, and weight of the tuner portion of swept superheterodyne receivers. By locating the preselector and oscillator resonators in the same magnetic field, tracking over wide temperature ranges and maximum scanning rate are greatly improved.

GENERAL CHARACTERISTICS[1]

Model Number	VZP-3002	VZL-3002	VZS-3002	VZC-3002	VZX-3002	VZU-3002	VZK-3002	VZA-3002	Units
Frequency Range	0.5-1.0	1.0-2.0	2.0-4.0	4.0-8.0	8.0-12.0	12.0-18.0	18.0-26.5	26.5-40.0	GHz
Noise Figure	15	15	15	16	17	18	23	28	dB
Bandwidth	20	25	30	30	30	30	>35	>40	MHz
RF-IF Gain	20	20	20	20	20	20	>20	>20	dB
IF Frequency*	160	160	160	160	160	160	160	160	MHz
Image Rejection	70	70	70	70	70	70	>50	>50	dB
LO Radiation	-80	-80	-80	-80	-80	-80	<-60	<-60	dBm
Input Power	12	12	12	25	40	60	100	100	W
Dimensions, nom.	4 x 4 x 8	4 x 4 x 8	4 x 4 x 8	4 x 4 x 10	4 x 4 x 10	4 x 4 x 10	4.1 x 4.1 x 11.6	4.1 x 4.1 x 11.6	in
Weight	10	10	10	13	13	13	<15	<15	lb

* Other IF Frequencies can be provided on request.

RF Connectors are SMA.

3608 10/76

Printed in U.S.A.

NOTE:

1. Characteristic values are based on performance tests. These figures may change without notice as a result of additional data or product refinement. Consult Varian before using this information for final equipment design.

BLOCK DIAGRAM OF VZ-3002 SERIES MICROWAVE TUNER

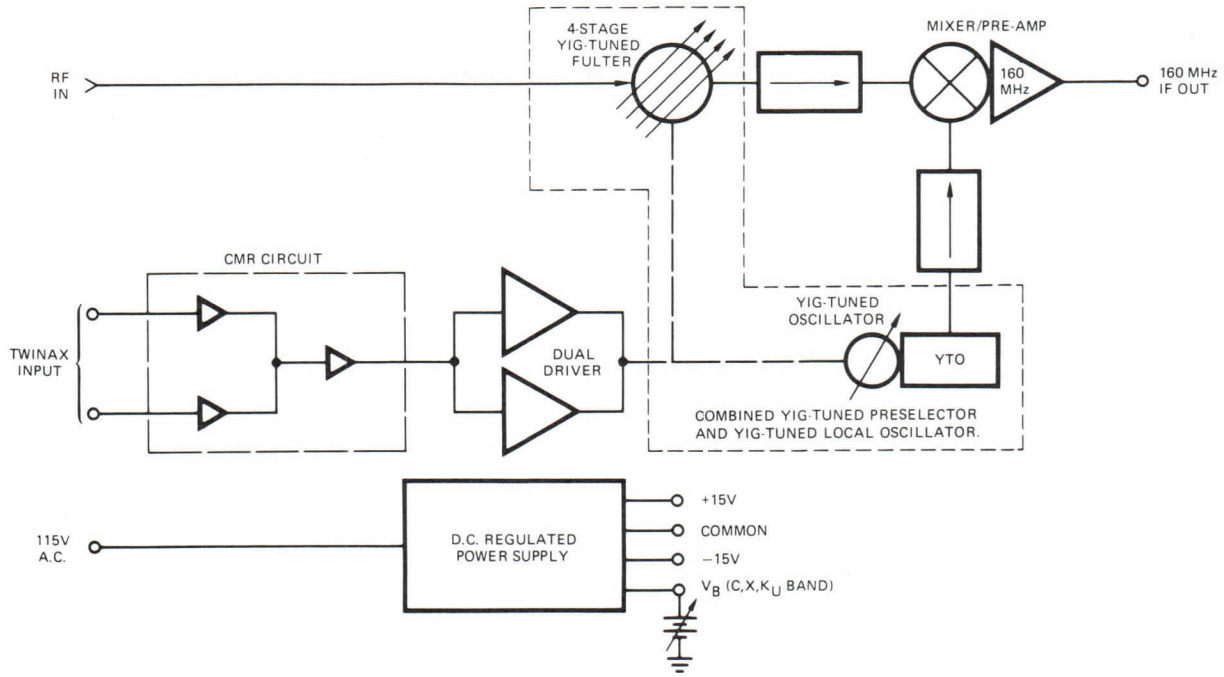

varian
solid state west division

TECHNICAL DATA

ULTRA LOW NOISE MICROWAVE TRANSISTOR AMPLIFIERS FOR RADAR SYSTEMS 0.4-3.6 GHz

DESCRIPTION

The Varian line of ultra-low-noise transistor amplifiers for RADAR systems covers all the standard radar bands from 0.4 to 3.6 gigahertz. These amplifiers are ideal for use in shipboard, airborne, and ground-based radars, where the combination of ultra-low noise figure and high-power output provides maximum dynamic range.

The all-discrete, microstripline, solid-state circuit design assures reliable performance and extremely long life when operated under the stringent environmental requirements of MIL-E-5400 and MIL-E-16400.

The table below lists many of the standard units in the radar amplifier product line.

GENERAL CHARACTERISTICS [1, 2, 3, 4, 5]

Frequency Range (GHz)	Max. Noise Figure[6] (dB)	Min. Power Output at 1 dB Gain Comp. Point (+ dBm)	Typical Intercept Point for Intermod. Products (+ dBm)	Min. Small Signal Gain (dB)	Max. Gain Variation (± dB)	Max. Input and Output VSWR	Primary Input Requirements[7] (+ Vdc)	Model Number
0.40-0.45	2.0	7	20	25	0.5	2:1	15	VSP-7431N
0.40-0.45	2.5	10	23	25	0.5	2:1	15	VSP-7431R
1.1-1.3	2.7	10	22	25	0.5	2:1	15	VSL-7441R
1.1-1.4	2.25	5	17	25	0.5	2:1	15	VSL-7441M
1.1-1.4	2.5	5	17	25	0.5	2:1	15	VSL-7441E
1.2-1.4	3.0	10	22	25	0.5	2:1	15	VSL-7441T
1.25-1.35	2.25	5	17	25	0.5	2:1	15	VSL-7441V
1.25-1.35	2.5	5	17	25	0.5	2:1	15	VSL-7441Y
2.7-2.9	3.5	10	21	25	0.5	2:1	15	VSS-7451P
2.7-3.1	3.5	5	16	25	1.0	2:1	15	VSS-7451N
2.7-3.1	4.0	7	18	25	1.0	2:1	15	VSS-7451R
2.7-3.6	4.5	10	21	25	1.0	2:1	15	VSS-7451V
2.7-3.6	5.0	7	18	25	1.0	2:1	15	VSS-7451W
2.9-3.1	3.5	5	16	25	1.0	2:1	15	VSS-7451Y
2.9-3.1	4.0	10	21	25	0.5	2:1	15	VSS-7451Q
3.1-3.5	4.0	5	16	25	1.0	2:1	15	VSS-7451G
3.1-3.5	4.5	7	18	25	1.0	2:1	15	VSS-7451T

PHYSICAL

Dimensions ..... See Outline Drawing
Weight, approximate ..... 3 oz
Connectors[8] ..... See Outline Drawing

ENVIRONMENTAL

Vibration, up to 500 Hz ..... 10 G
Shock, 11 ms ..... 15 G
Temperature ..... -54 to +85 °C
Altitude ..... 70,000 ft

3167 3/74

Printed in U.S.A.

RADAR TRANSISTOR AMPLIFIERS

NOTES:

1. Characteristics are based on performance tests. These values may change without notice as a result of additional data or product refinement. Consult the Varian Solid State West Division before using this information for final equipment design.

2. All performance characteristics can be modified to meet special customer requirements. In addition, units with higher or lower gain, and higher power output are available upon request.

3. As an option, amplifiers are available with integral limiters for protection against excessive rf input levels.

4. Automatic gain control, AGC, is available upon request.

5. These amplifiers are designed to meet the environmental requirements of MIL-E-5400 and MIL-E-16400. Special units to meet other environmental specification limits are also available.

6. Maximum noise figure at +25°C.

7. Units not indicating integral power supplies (no "P" suffix) can be supplied with power supplies if requested. In addition, versions operating from other line voltages can also be furnished upon request.

8. Units may be provided with Type N rf connectors upon request.

OUTLINE DRAWING

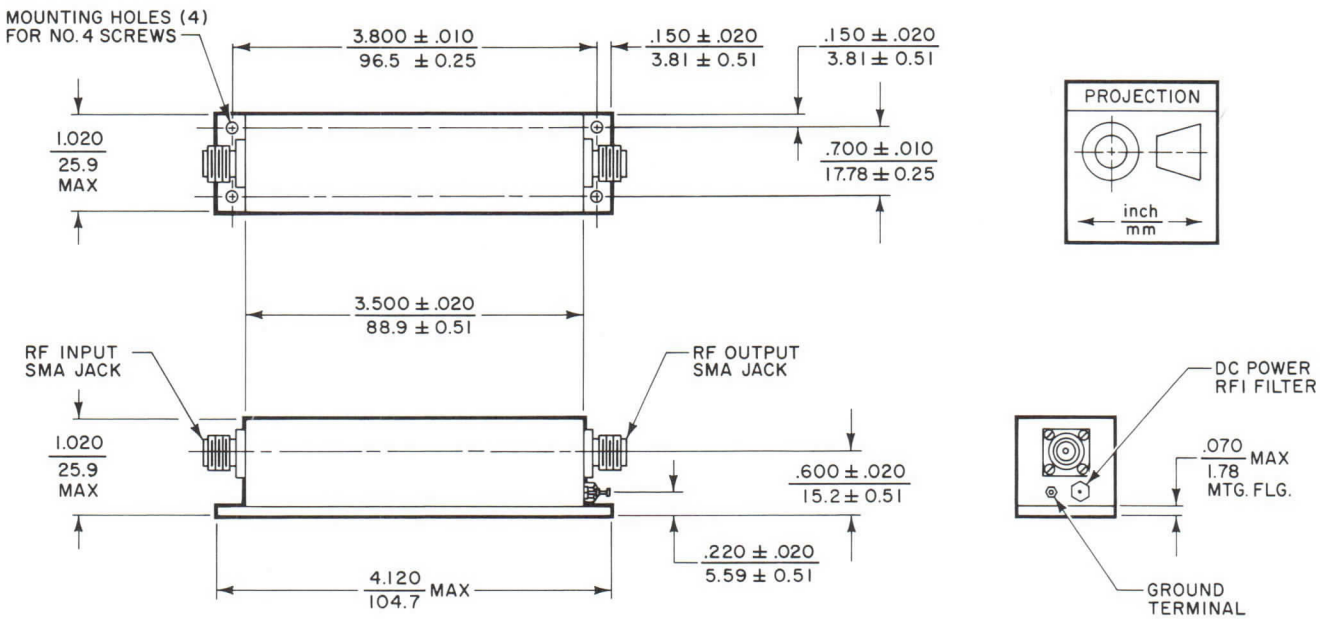

varian
solid state west division

TECHNICAL DATA

MINIATURE THIN-FILM LOW NOISE AMPLIFIERS FOR MICROWAVE SYSTEMS 2.0-5.4 GHz

DESCRIPTION

Varian's line of miniature thin-film MIC transistor amplifiers covers the frequency range of 2.0 to 5.4 gigahertz and represents the ultimate in the combination of small size and volume with optimum performance. Because of their extremely small size, they are ideally suited to satisfy the performance requirements typically demanded in high packaging density applications. These miniature thin-film amplifiers are designed to operate under the stringent environmental requirements of MIL-E-5400, Class 3, in ambient temperatures as high as +125 degrees Celsius. The table below lists many of the standard units in the thin-film MIC transistor amplifier product line.

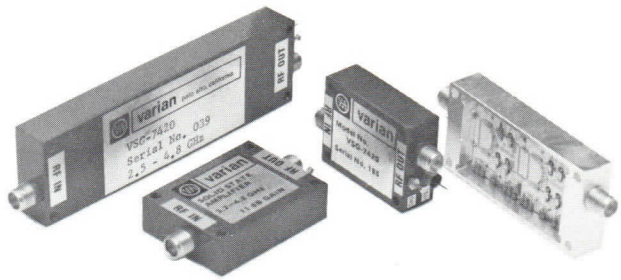

GENERAL CHARACTERISTICS [1,2,3,4,5]

Frequency Range (GHz)	Max. Noise Figure (dB)	Min. Power Output at 1 dB Gain Comp. Point (dBm)	Typical Intercept Point Intermod. for Products (dBm)	Min. Small Signal Gain (dB)	Max. Gain Variation (±dB)	Max. Input and Output VSWR	Typical Current at +15 Vdc (mAdc)	Typical Weight (oz)	Outline Drawing	Model Number
2.0 - 4.0	6.5	7	19	25	1.0	1.5:1	120	1.5	1	VSS-7450L
2.0 - 4.0	6.5	7	19	40	1.5	1.5:1	180	2.0	2	VSS-7450M
2.0 - 4.0	6.5	7	19	50	2.0	1.5:1	240	2.5	3	VSS-7450P
2.6 - 5.2	8.5	5	17	20	1.0	1.5:1	120	1.5	4	VSG-7420B
2.6 - 5.2	8.5	5	17	30	1.5	1.5:1	180	2.0	5	VSG-7420C
2.6 - 5.2	8.5	5	17	40	1.5	1.5:1	240	2.5	6	VSG-7420F
2.6 - 5.4	8.5	5	17	20	1.5	1.5:1	160	1.5	5	VSG-7420G
2.6 - 5.4	8.5	5	17	30	2.0	1.5:1	240	2.0	6	VSG-7420J
3.7 - 4.2	7.0	7	19	24	0.25	1.3:1	120	1.5	4	VSG-7420L
3.7 - 4.2	7.0	7	19	36	0.30	1.3:1	180	2.0	5	VSG-7420N
3.7 - 4.2	7.0	7	19	42	0.40	1.3:1	240	2.5	6	VSG-7420P
4.4 - 5.0	8.5	8	20	20	0.50	1.3:1	120	2.0	4	VSC-7460B
4.4 - 5.0	8.5	8	20	30	1.0	1.3:1	180	2.5	5	VSC-7460F

MECHANICAL

Dimensions ..... See Outline Drawings
Connectors ..... See Outline Drawings

ENVIRONMENTAL

Vibrations, up to 500 Hz ..... 10 G
Shock, 11 ms ..... 15 G
Temperature ..... -54 to +95 °C
Altitude ..... 70,000 ft

3301 10/74

Printed in U.S.A.

THIN-FILM LOW NOISE AMPLIFIERS

NOTES:

1. Characteristics are based on performance tests. These values may change without notice as a result of additional data or product refinement. Consult the Varian Solid State West Division before using this information for final equipment design.

2. All performance characteristics can be modified to meet special customer requirements. In addition, units with higher or lower gain, and higher power output are available upon request.

3. As an option, amplifiers are available with integral limiters for protection against excessive rf input levels.

4. Automatic gain control, AGC, is available upon request.

5. These amplifiers are designed to meet the environmental requirements of MIL-E-5400 and MIL-E-16400. Special units to meet other environmental specification limits are also available.

6. Maximum noise figure at 25° C.

OUTLINE DRAWINGS

No. 1

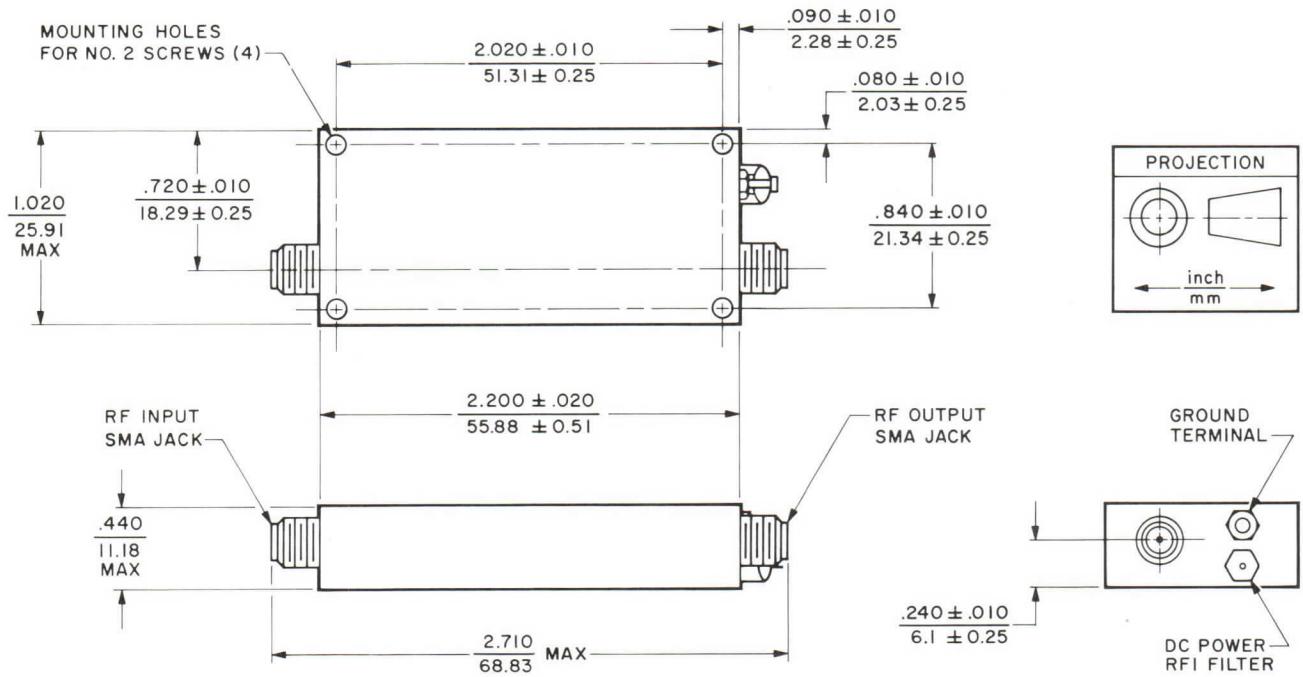

No. 2

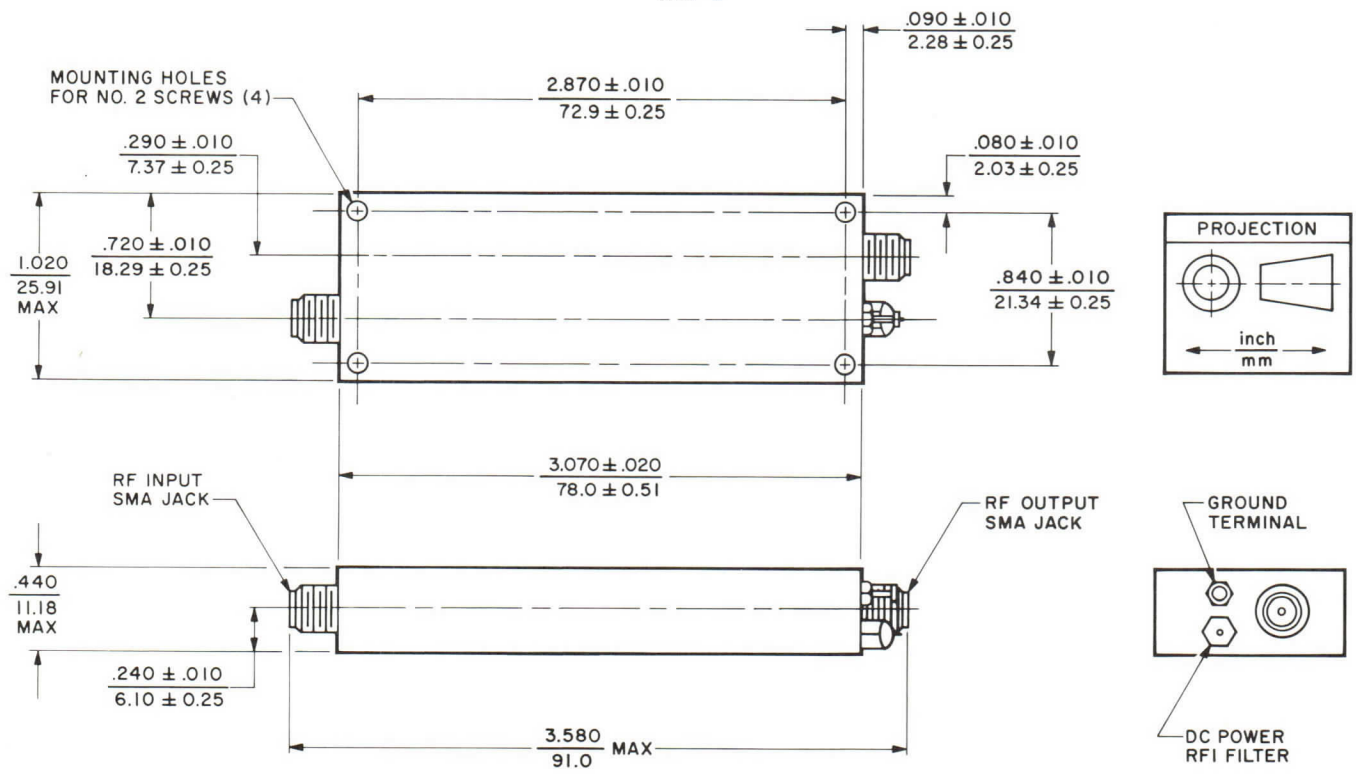

OUTLINE DRAWINGS

No. 3

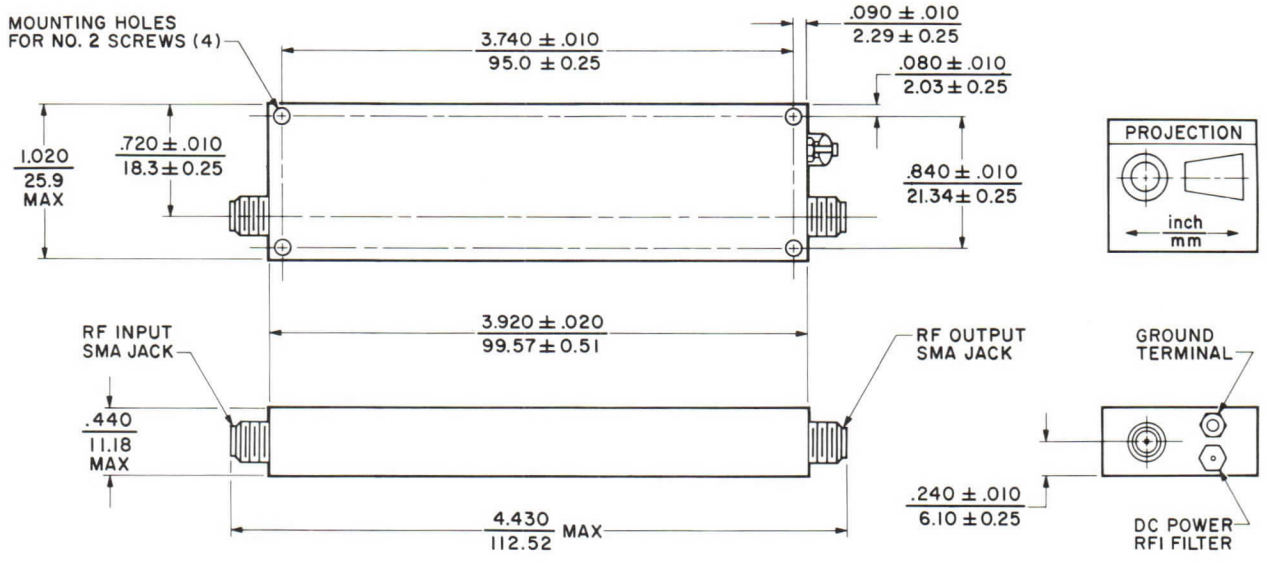

No. 4

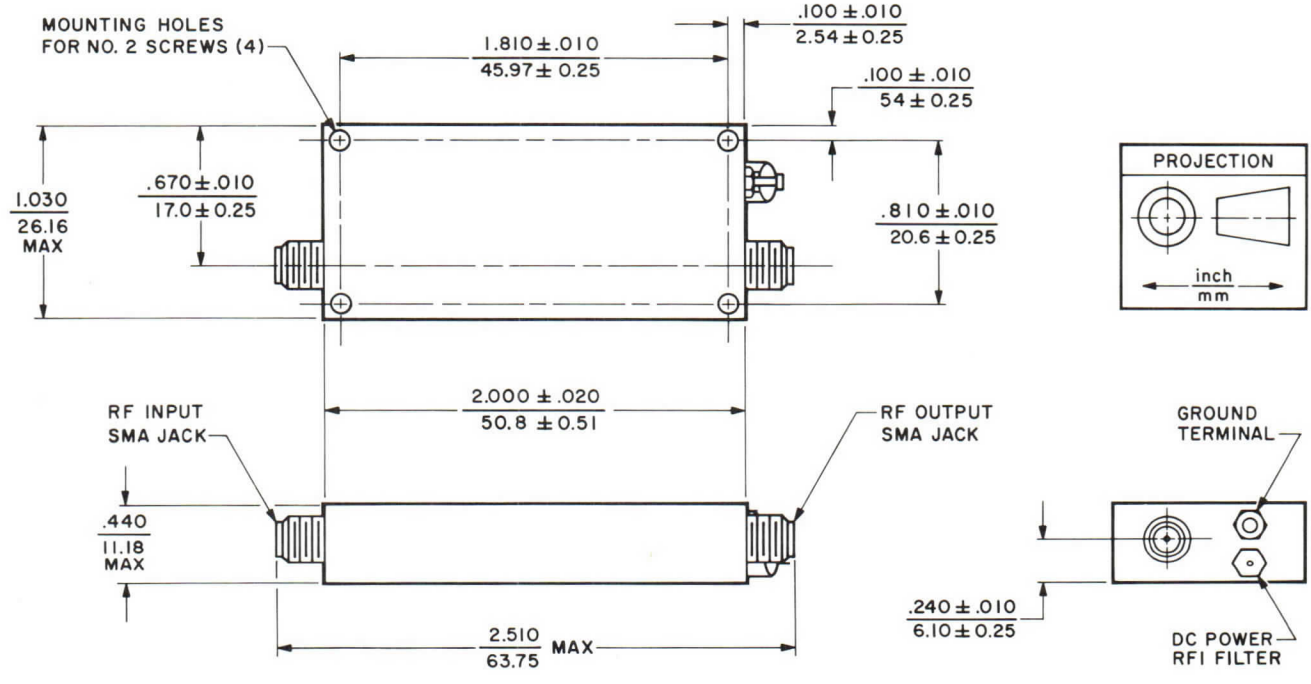

OUTLINE DRAWINGS

No. 5

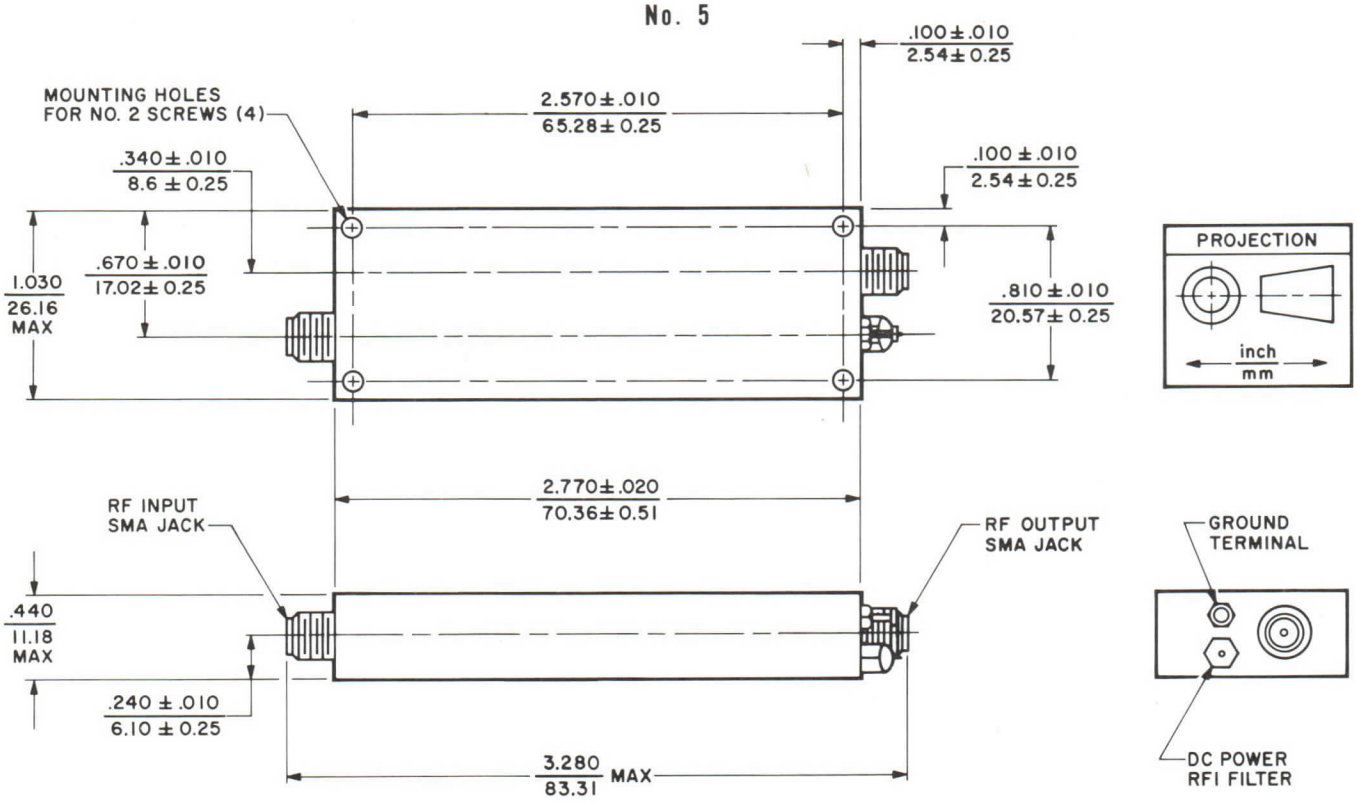

No. 6

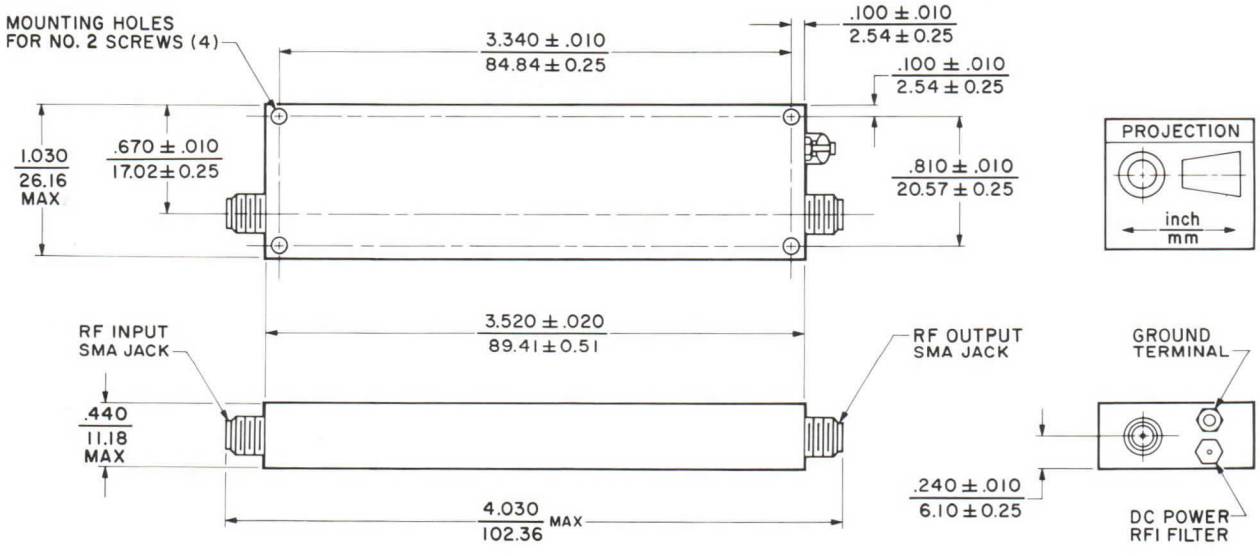

varian
solid state west division

TECHNICAL DATA

ULTRA LOW NOISE AND LOW NOISE MICROWAVE TRANSISTOR AMPLIFIERS FOR COMMUNICATION SYSTEMS

0.47-4.20 GHz

DESCRIPTION

The Varian line of low-noise transistor amplifiers for Communication Systems covers all the standard communications bands from 0.47 to 4.2 GHz. These amplifiers are intended for use in shipboard, airborne, and ground-based communications equipment where the combination of low noise figure and high power output provides maximum dynamic range. These wide dynamic range amplifiers have been optimized for communication applications with special attention given to minimizing delay distortion, AM/PM conversion, gain slope, and intermodulation distortion.

The all-discrete, microstripline, solid-state circuit design assures reliable performance and extremely long life when operated under the stringent environmental requirements of MIL-E-5400 and MIL-E-16400.

The table below lists many of the standard units in the communications amplifier product line.

GENERAL CHARACTERISTICS [1,2,3,4,5]

Frequency Range (GHz)	Max. Noise Figure[6] (dB)	Min. Power Output at 1dB Gain Comp. Point (+ dBm)	Typical Intercept Point for Intermod. Products (+ dBm)	Min. Small Signal Gain (dB)	Max. Gain Variation (± dB)	Max. Input and Output VSWR	Primary Input Requirements[7] (+ Vdc)	Drawing Number	Model Number
0.47-0.89	2.25	7	20	25	0.75	2:1	15	1	VSP-7431J
0.47-0.89	2.5	10	23	25	0.75	2:1	15	1	VSP-7431D
0.755-0.985	2.25	7	20	25	0.5	2:1	15	1	VSP-7431L
0.755-0.985	2.5	10	23	25	0.5	2:1	15	1	VSP-7431F
0.960-1.215	2.25	7	20	25	0.5	2:1	15	1	VSP-7431M
0.960-1.215	3.0	10	23	25	0.5	2:1	15	1	VSP-7431G
1.435-1.535	2.5	7	19	25	0.25	2:1	15	1	VSL-7441Q
1.435-1.535	3.5	10	22	25	0.25	2:1	15	1	VSL-7441D
1.54-1.66	2.5	7	19	25	0.25	2:1	15	1	VSL-7441Z
1.54-1.66	3.5	10	22	25	0.25	2:1	15	1	VSL-7441F
1.7-2.1	3.5	10	22	25	0.5	2:1	15	1	VSL-7441G
1.7-2.4	3.5	5	16	25	0.5	2:1	15	1	VSL-7441N
1.7-2.4	4.0	10	22	25	0.5	2:1	15	1	VSL-7441J
2.2-2.3	4.0	10	22	25	0.25	2:1	15	1	VSS-7451D
3.7-4.2	4.5	7	18	25	0.5	2:1	15	1	VSG-7421G
3.7-4.2	4.5	7	18	40	0.5	2:1	15	3	VSG-7421F
3.7-4.2	5.0	7	18	25	0.5	2:1	15	1	VSG-7421B
3.7-4.2	5.0	7	18	25	0.5	2:1	103-127 Vac, 50-420 Hz	2	VSG-7421BP
3.7-4.2	5.0	7	18	40	0.5	2:1	15	3	VSG-7421R
3.7-4.2	5.0	7	18	40	0.5	2:1	103-127 Vac, 50-420 Hz	4	VSG-7421RP
3.7-4.2	6.0	7	18	25	0.5	2:1	103-127 Vac, 50-420 Hz	2	VSG-7421AP
3.7-4.2	8.0	7	18	40	0.5	2:1	103-127 Vac, 50-420 Hz	4	VSG-7421HP

3304 10/74 Supersedes 3166

Printed in U.S.A.

GENERAL CHARACTERISTICS [1,3,5]

PHYSICAL

Dimensions ..... See Outline Drawings
Weight, approximate
- Outline 1 ..... 3 oz
- Outline 2 ..... 11 oz
- Outline 3 ..... 6 oz
- Outline 4 ..... 19 oz

Connectors[8] ..... See Outline Drawings

ENVIRONMENTAL

Vibration, up to 500 Hz ..... 10 G
Shock, 11 ms ..... 15 G
Temperature ..... -54 to +85 °C
Altitude ..... 70,000 ft

NOTES:

1. Characteristics are based on performance tests. These values may change without notice as a result of additional data or product refinement. Consult the Varian Solid State West Division before using this information for final equipment design.
2. All performance characteristics can be modified to meet special customer requirements. In addition, units with higher or lower gain, and higher power output are available upon request.
3. As an option, amplifiers are available with integral limiters for protection against excessive rf input levels.
4. Automatic gain control, AGC, is available upon request.
5. These amplifiers are designed to meet the environmental requirements of MIL-E-5400 and MIL-E-16400. Special units to meet other environmental specification limits are also available.
6. Maximum noise figure at +25°C.
7. Units not indicating integral power supplies (no "P" suffix) can be supplied with power supplies if requested. In addition, versions operating from other line voltages can also be furnished upon request.
8. Units may be provided with Type N rf connectors upon request.

OUTLINE DRAWING

No. 1

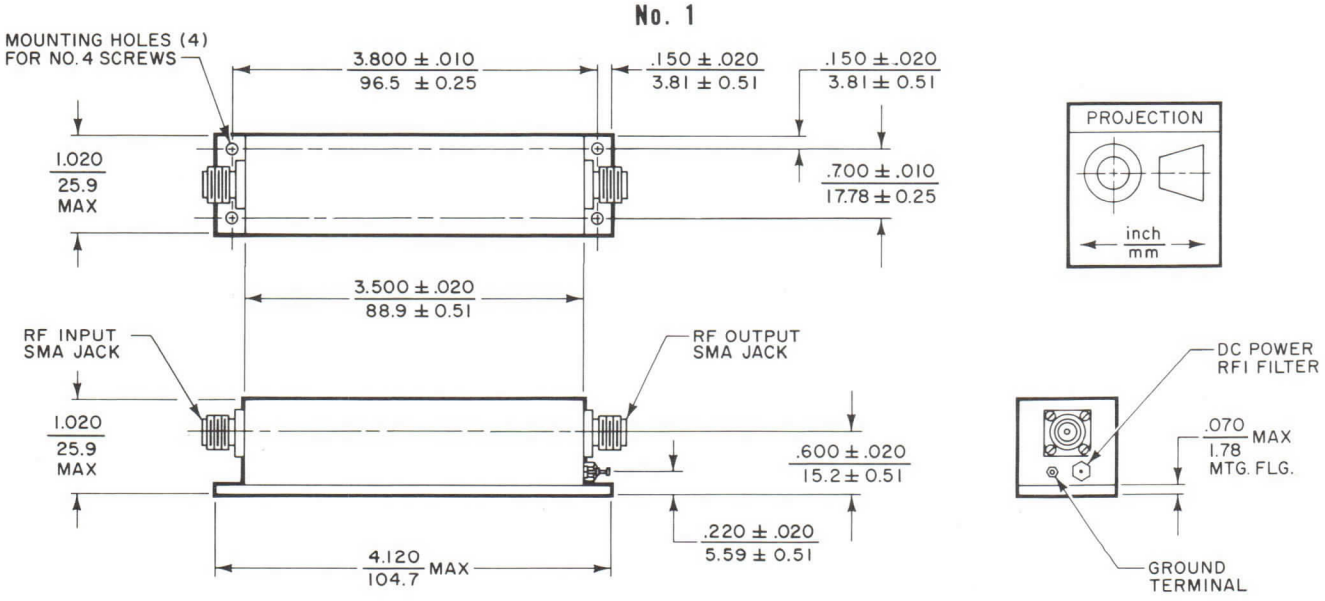

OUTLINE DRAWINGS

No. 2

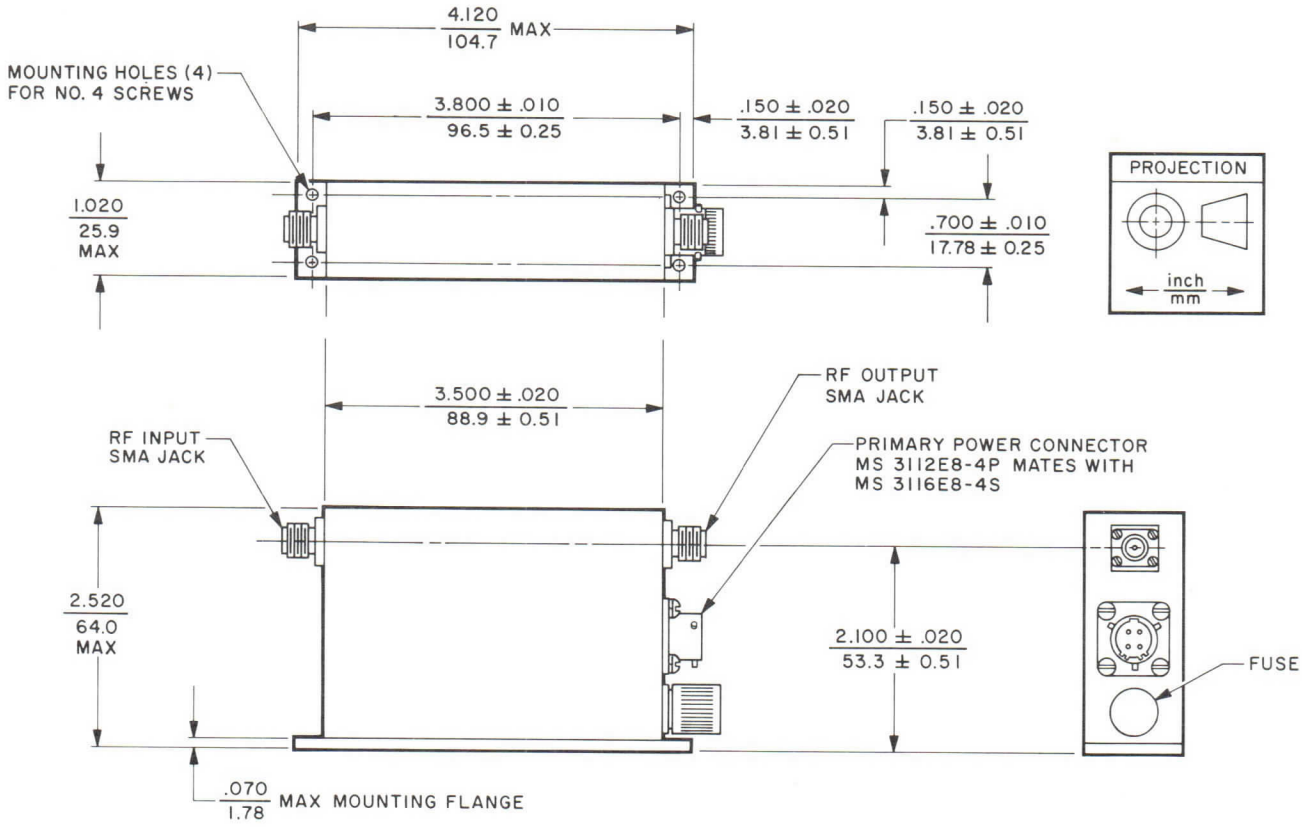

No. 3

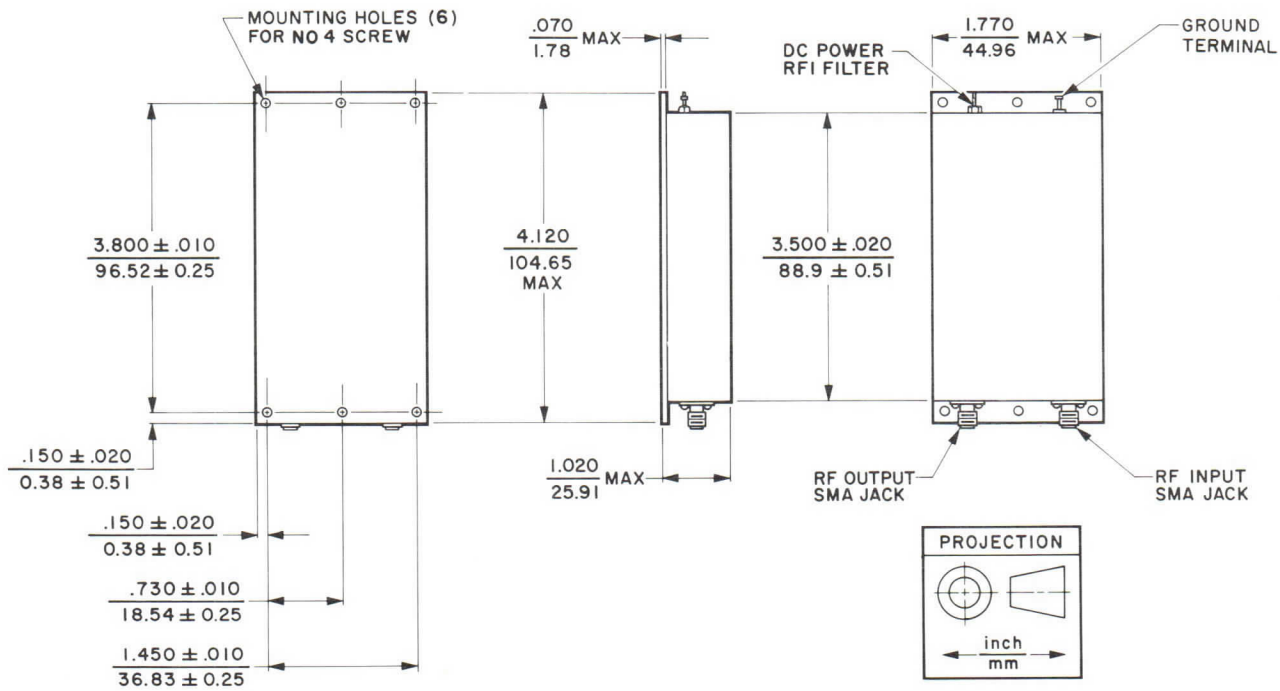

OUTLINE DRAWING

No. 4

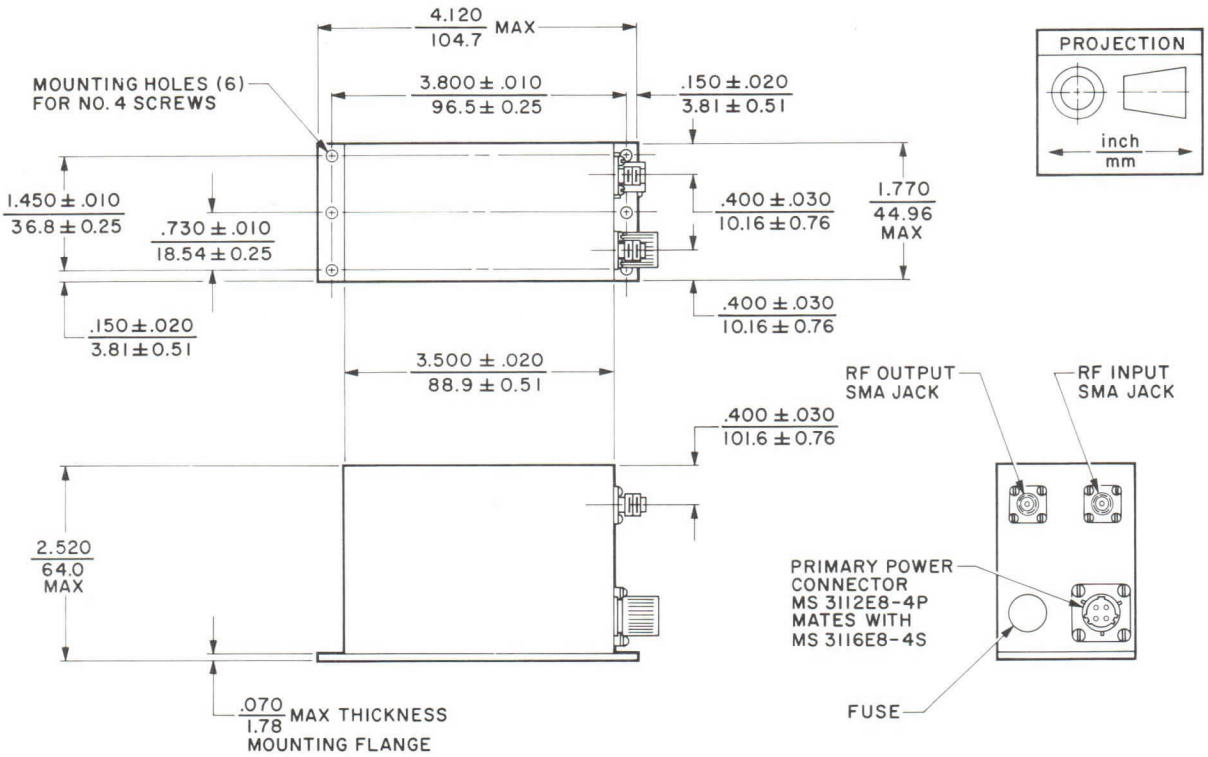

varian
solid state west division

TECHNICAL DATA

VSG-7425F

MEDIUM POWER MICROWAVE COMMUNICATIONS SOLID STATE AMPLIFIER

3.7-4.2 GHz

FEATURES

- Over 200 milliwatts output, 3.7-4.2 GHz
- Small size — 1.0 x 2.5 x 4.25 inches

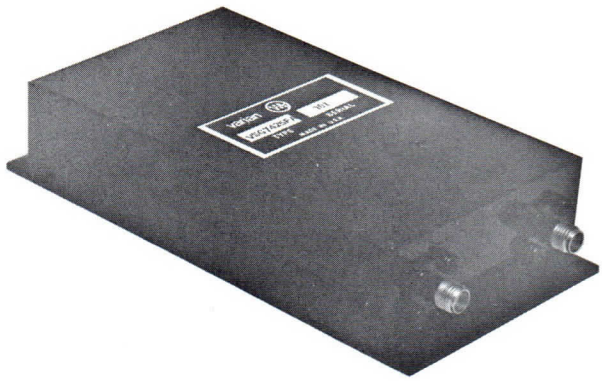

DESCRIPTION

The VSG-7425F is a medium-power transistor amplifier designed specifically for use as a receiver post amplifier in Commercial Satellite Ground Stations, and as a transmitting amplifier in commercial line-of-sight systems.

Its very high power output, typically more than 250 milliwatts, amply satisfies the stringent 3rd-order intermodulation products and AM/PM conversion specifications required in most communication systems.

GENERAL CHARACTERISTICS [1,2]

Frequency Range	3.7-4.2 GHz
Power Output, at saturation	
Minimum	+23 dBm
Typical	+24 dBm
Noise Figure	
Maximum	10.0 dB
Typical	8.5 dB
Small Signal Gain	
Minimum	35 dB
Typical	37 dB
Gain Variation	
Maximum	±1.5 dB
Typical	±1 dB
Input and Output VSWR	
Maximum	2.0:1
Typical	2.0:1
Intercept Point for 3rd Order Intermodulation Products	
Typical	+30 dBm

PRIMARY ELECTRICAL REQUIREMENTS [3]

Voltage	-24 Vdc
Current, typical	450 mAdc

ENVIRONMENTAL [4]

Vibration, up to 500 Hz	10 G
Shock, 11 ms	15 G
Temperature	-54 to +71 °C
Altitude	70,000 ft

MECHANICAL

Dimensions	See Outline Drawing
Weight	10 oz
Connectors	
R-F Input and Output, 50-Ω	SMA Jack
Primary Power	RFI Pin Type

3073 8/73

Printed in U.S.A.

CHARACTERISTIC CURVES[1,2]

Typical performance values

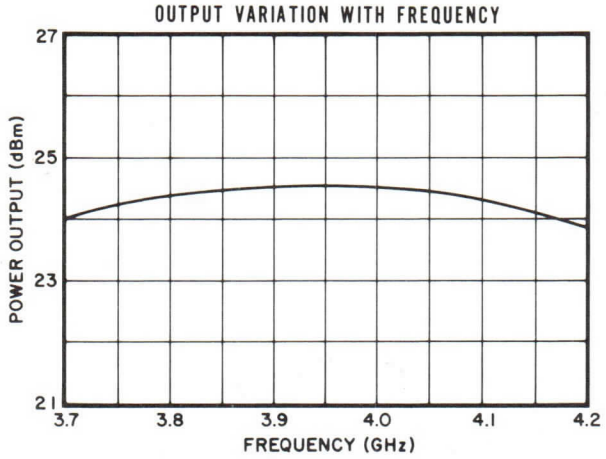

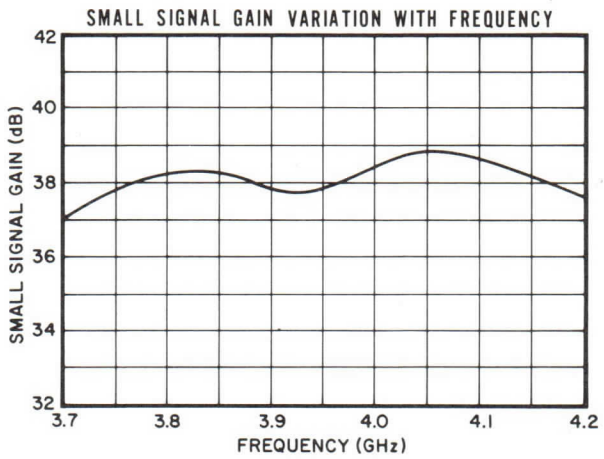

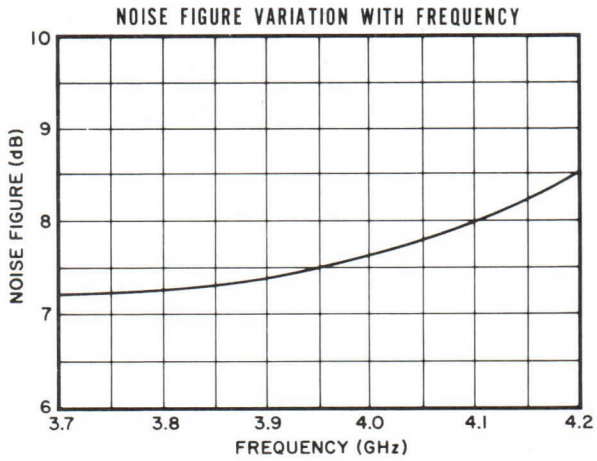

NOTES:

1. Characteristics and curves are based on performance tests. These values may change without notice as a result of additional data or product refinement. Consult the Varian Solid State West Division before using this information for final equipment design.

2. All performance characteristics can be adjusted to meet special customer requirements. Special units with additional communications specifications are also available upon request. In addition, units with higher or lower gain are also available.

3. Power supplies for operation from line voltages or other d-c sources can be furnished upon request.

4. This amplifier is designed to satisfy the environmental requirements of Commercial Satellite Ground Terminals and line-of-sight stations. Special units to meet other environmental specification limits are also available.

OUTLINE DRAWING

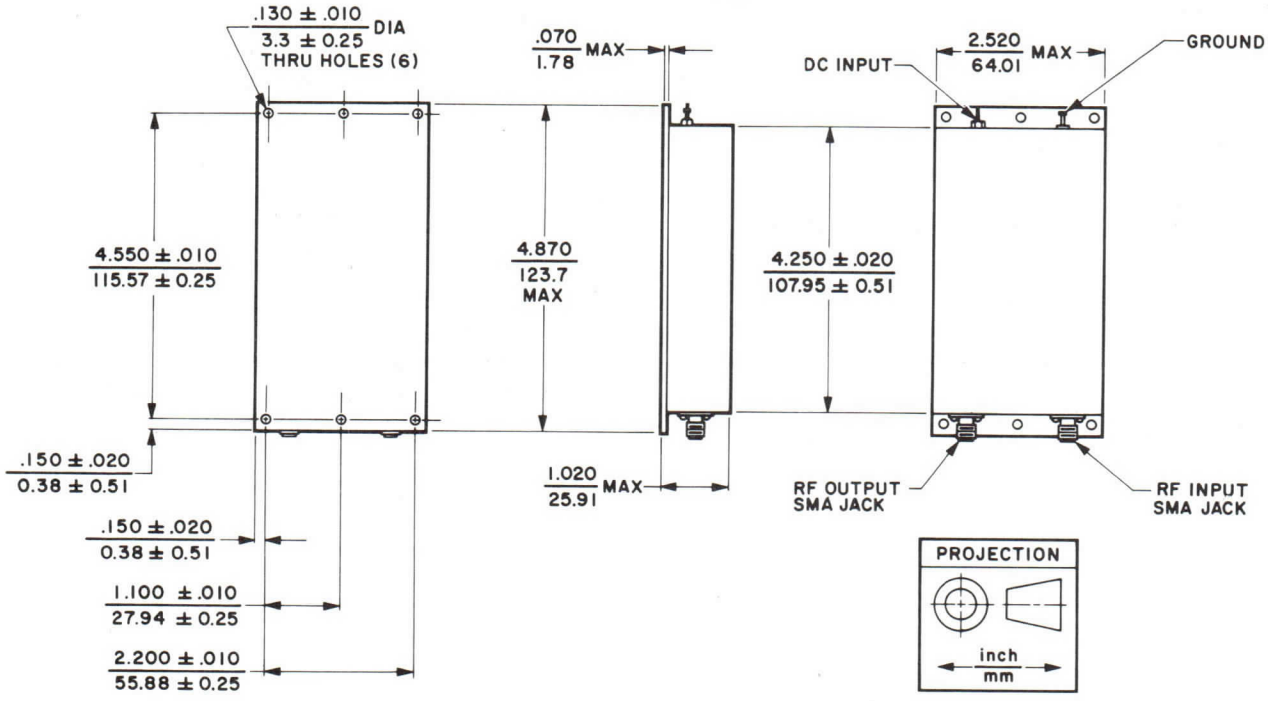

varian
solid state west division

TECHNICAL DATA

VSP-7431A

ULTRA LOW NOISE WIDEBAND MICROWAVE SOLID STATE AMPLIFIER

0.5-1.0 GHz

FEATURES

- Ultra low-noise figure — < 2.5 dB
- Wide dynamic range — > +10 dBm Po
- Small size — 1.0 x 1.0 x 3.5 inches
- Meets requirements of MIL-E-5400 and MIL-E-16400

DESCRIPTION

The VSP-7431A is a P-band member of our family of miniature ultra low-noise, solid-state amplifiers. It is primarily intended for use as a preamplifier in wideband electronic-warfare applications requiring low-noise figure and high-power output for maximum sensitivity and dynamic range.

The all discrete microstripline solid-state design assures reliable performance and extremely long life under the stringent environmental requirements of MIL-E-5400 and MIL-E-16400 specifications.

GENERAL CHARACTERISTICS[1,2,3,4]

Frequency Range	0.5-1.0 GHz
Noise Figure	
Maximum	2.5 dB
Typical	2.0 dB
Power Output, at 1-dB Gain Compression Point	
Minimum	+10 dBm
Typical	+13 dBm
Small Signal Gain	
Minimum	25 dB
Typical	30 dB
Gain Variation	
Maximum	±1.0 dB
Typical	±0.5 dB
Input and Output VSWR	
Maximum	2.0:1
Typical	2.0:1
Intercept Point for 3rd Order Intermodulation Products	
Typical	+23 dBm

PRIMARY ELECTRICAL REQUIREMENTS[5]

Voltage	+15 Vdc
Current, typical	40 mAdc

ENVIRONMENTAL[6]

Vibration, up to 500 Hz	10 G
Shock, 11 ms	15 G
Temperature	-54 to +85 °C
Altitude	70,000 ft

MECHANICAL

Dimensions	See Outline Drawing
Weight	3 oz
Connectors	
R-F Input and Output, 50-Ω	SMA Jack
Primary Power	RFI Pin Type

3083 8/73

Printed in U.S.A.

CHARACTERISTIC CURVES[1]

Typical performance values

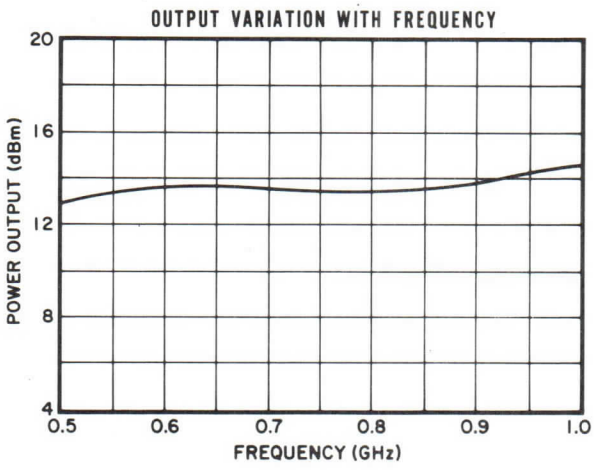

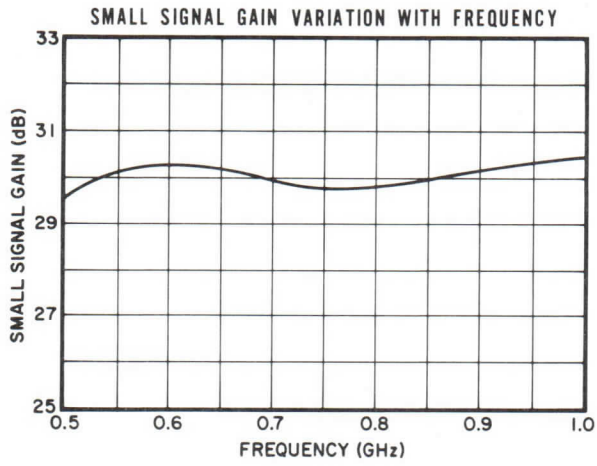

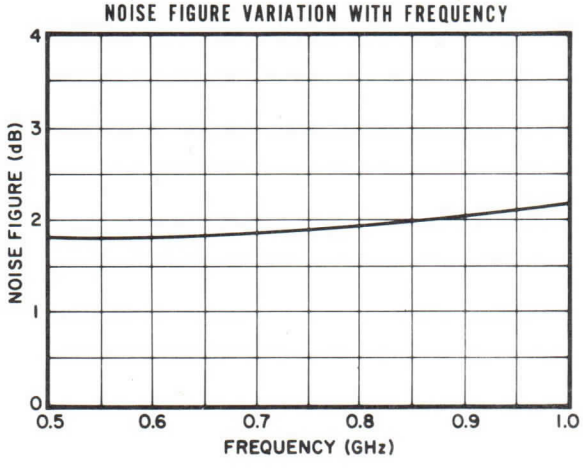

NOTES:

1. Characteristics and curves are based on performance tests. These values may change without notice as a result of additional data or product refinement. Consult the Varian Solid State West Division before using this information for final equipment design.
2. All performance characteristics can be adjusted to meet special customer requirements. In addition, units with higher or lower gain, and higher power output are available upon request.
3. R-f input limiting and overload protection is available as an option upon request.
4. Automatic gain control, AGC, is available upon request.
5. Versions operating from other d-c sources can be furnished upon request. Optional integral power supplies are available for line voltage operations.
6. This amplifier is designed to meet the environmental requirements of MIL-E-5400 and MIL-E-16400. Special units to meet other environmental specification limits are also available.

OUTLINE DRAWING

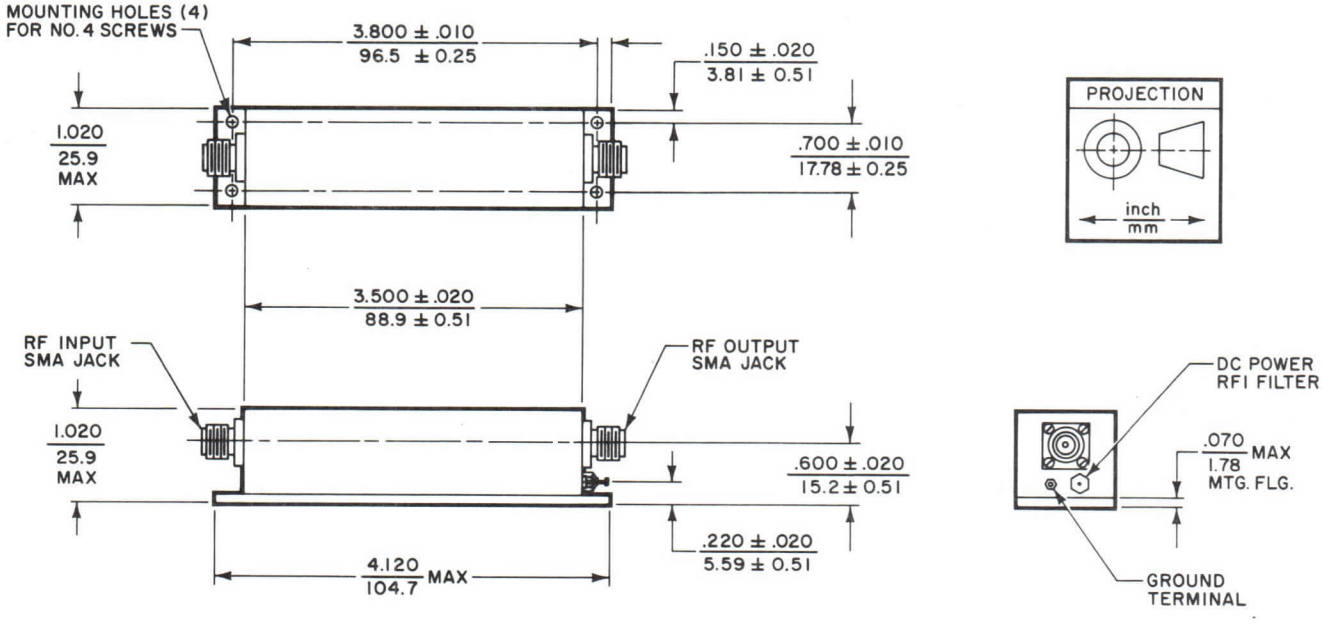

varian
solid state west division

TECHNICAL DATA

VSP-7431AP

ULTRA LOW NOISE, WIDEBAND, SOLID STATE AMPLIFIER, WITH INTEGRAL POWER SUPPLY

0.5-1.0 GHz

FEATURES

- Ultra-low-noise — < 2.5 dB
- Wide dynamic range — > +10 dBm Po
- Integral power supply
- Small size — 1.0 x 2.5 x 3.5 inches
- Meets requirements of MIL-E-5400 and MIL-E-16400

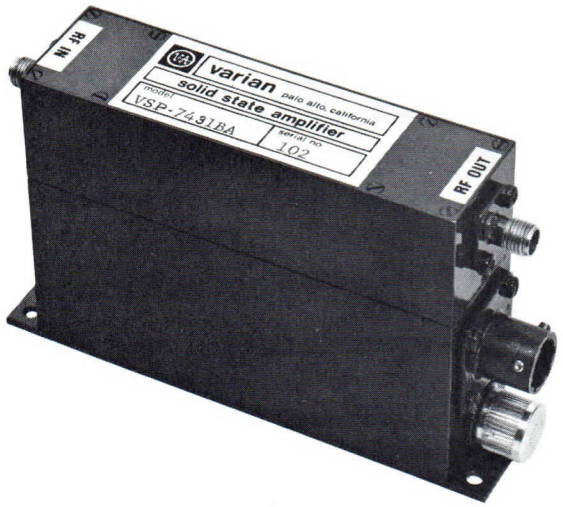

DESCRIPTION

The VSP-7431AP is a P-band member of our family of miniature ultra-low-noise, solid-state amplifiers with integral power supplies. It is intended primarily for use as a preamplifier in wideband electronic-warfare applications requiring low noise figure and high power output for maximum sensitivity and dynamic range.

The combination of the all discrete, microstripline, solid-state amplifier design and the ultra-stable, solid-state power supply assures reliable performance and extremely long life when operated under the stringent environmental requirements of MIL-E-5400 and MIL-E-16400 specifications.

GENERAL CHARACTERISTICS [1,2,3,4]

Frequency Range	0.5-1.0 GHz
Noise Figure	
Maximum	2.5 dB
Typical	2.0 dB
Power Output, at 1-dB Gain Compression Point	
Minimum	+10 dBm
Typical	+13 dBm
Small Signal Gain	
Minimum	25 dB
Typical	30 dB
Gain Variation	
Maximum	±1.0 dB
Typical	±0.5 dB
Input and Output VSWR	
Maximum	2.0:1
Typical	2.0:1
Intercept Point for 3rd Order Intermodulation Products	
Typical	+23 dBm

PRIMARY ELECTRICAL REQUIREMENTS [5]

Voltage	103-127 Vac
Frequency	50-420 Hz
Power, typical	0.85 W

ENVIRONMENTAL [6]

Vibration, up to 500 Hz	10 G
Shock, 11 ms	15 G
Temperature	-54 to +85 °C
Altitude	70,000 ft

MECHANICAL

Dimensions	See Outline Drawing
Weight	11 oz
Connectors	
R-F Input and Output, 50-Ω	SMA Jack
Primary Power	Mates with MS3116E8-4S

3095 9/73

Printed in U.S.A.

CHARACTERISTIC CURVES [1,2]

Typical performance values

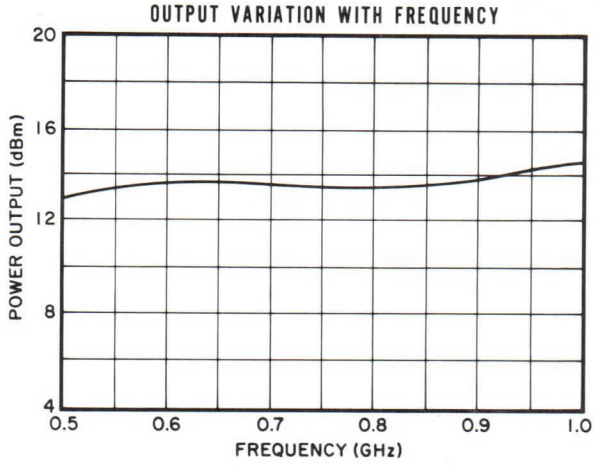

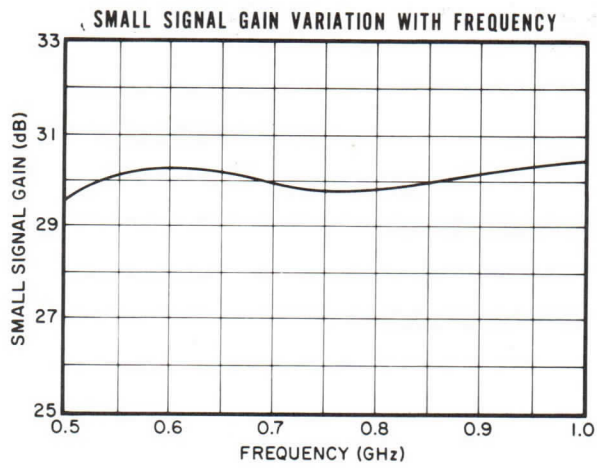

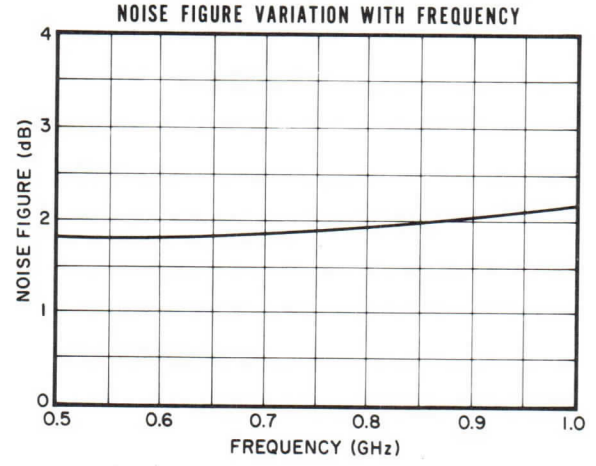

NOTES:

1. Characteristics and curves are based on performance tests. These values may change without notice as a result of additional data or product refinement. Consult the Varian Solid State West Division before using this information for final equipment design.
2. All performance characteristics can be adjusted to meet special customer requirements. In addition, units with higher or lower gain, and higher power output are available upon request.
3. R-f input limiting and overload protection is available as an option upon request.
4. Automatic gain control, AGC, is available upon request.
5. Versions operating from other line voltages can be furnished upon request. Models are also available which operate directly from d-c sources.
6. This amplifier is designed to meet the environmental requirements of MIL-E-5400 and MIL-E-16400. Special units to meet other environmental specification limits are also available.

OUTLINE DRAWING

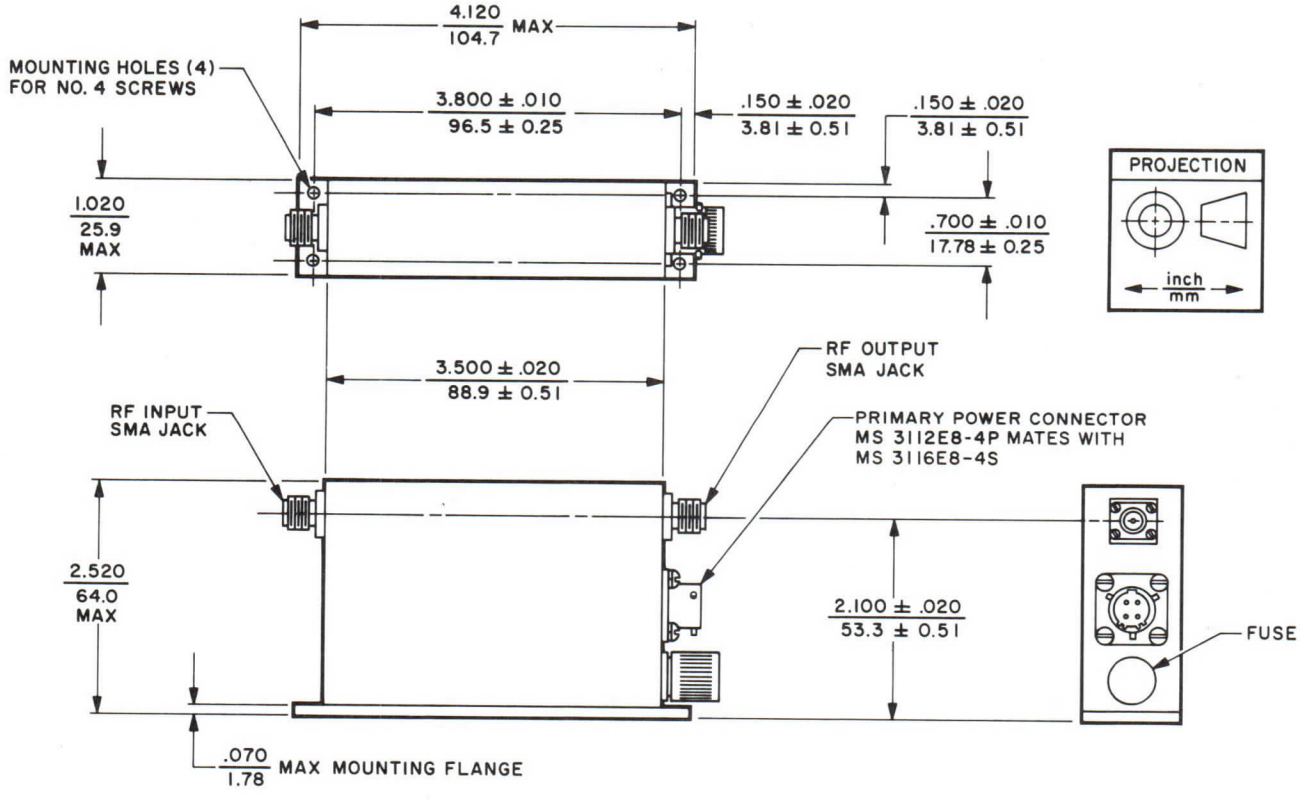

varian
solid state west division

TECHNICAL DATA

VSL-7441A

ULTRA LOW NOISE WIDEBAND MICROWAVE SOLID STATE AMPLIFIER 1.0-2.0 GHz

FEATURES

- Ultra low-noise figure — < 3.5 dB
- Wide dynamic range — > +10 dBm Po
- Small size — 1.0 x 1.0 x 3.5 inches
- Meets requirements of MIL-E-5400 and MIL-E-16400

DESCRIPTION

The VSL-7441A is an L-band member of our family of miniature ultra low-noise, solid-state amplifiers. It is primarily intended for use as a preamplifier in wideband electronic-warfare applications requiring low-noise figure and high-power output for maximum sensitivity and dynamic range.

The all discrete microstripline solid-state design assures reliable performance and extremely long life under the stringent environmental requirements of MIL-E-5400 and MIL-E-16400 specifications.

GENERAL CHARACTERISTICS[1,2,3,4]

Frequency Range	1.0-2.0 GHz
Noise Figure	
Maximum	3.5 dB
Typical	3.2 dB
Power Output, at 1-dB Gain Compression Point	
Minimum	+10 dBm
Typical	+12 dBm
Small Signal Gain	
Minimum	25 dB
Typical	31 dB
Gain Variation	
Maximum	±1.0 dB
Typical	±0.5 dB
Input and Output VSWR	
Maximum	2.0:1
Typical	2.0:1
Intercept Point for 3rd Order Intermodulation Products	
Typical	+22 dBm

PRIMARY ELECTRICAL REQUIREMENTS[5]

Voltage	+15 Vdc
Current, typical	55 mAdc

ENVIRONMENTAL[6]

Vibration, up to 500 Hz	10 G
Shock, 11 ms	15 G
Temperature	-54 to +85 °C
Altitude	70,000 ft

MECHANICAL

Dimensions	See Outline Drawing
Weight	3 oz
Connectors	
R-F input and Output, 50-Ω	SMA Jack
Primary Power	RFI Pin Type

3078 9/73

Printed in U.S.A.

CHARACTERISTIC CURVES[1]
Typical performance values

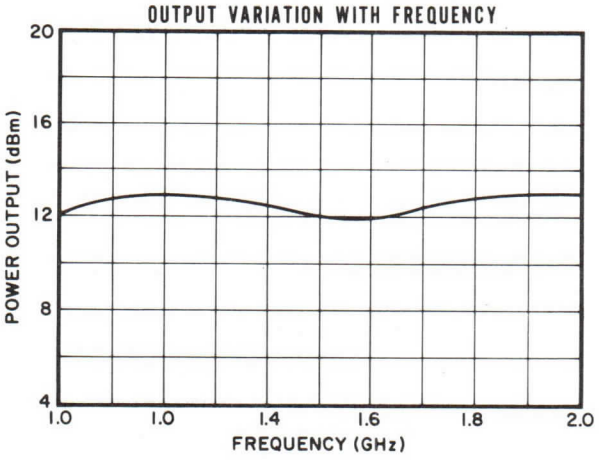

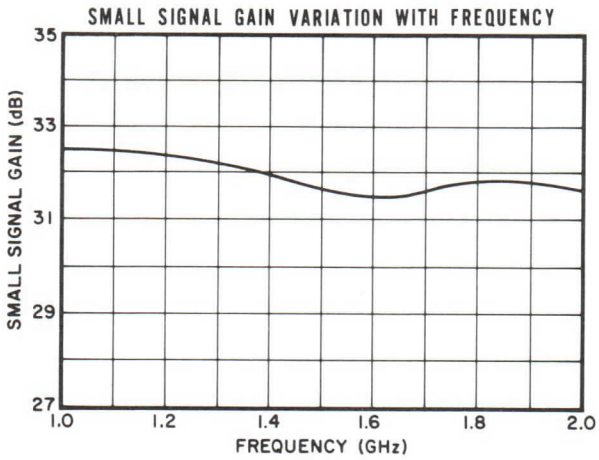

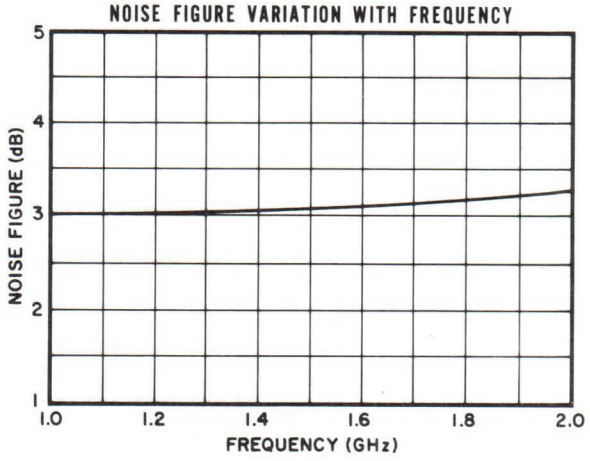

NOTES:

1. Characteristics and curves are based on performance tests. These values may change without notice as a result of additional data or product refinement. Consult the Varian Solid State West Division before using this information for final equipment design.
2. All performance characteristics can be adjusted to meet special customer requirements. In addition, units with higher or lower gain, and higher power output are available upon request.
3. R-f input limiting and overload protection is available as an option upon request.
4. Automatic gain control, AGC, is available upon request.
5. Versions operating from other d-c sources can be furnished upon request. Optional integral power supplies are available for line voltage operations.
6. This amplifier is designed to meet the environmental requirements of MIL-E-5400 and MIL-E-16400. Special units to meet other environmental specification limits are also available.

OUTLINE DRAWING

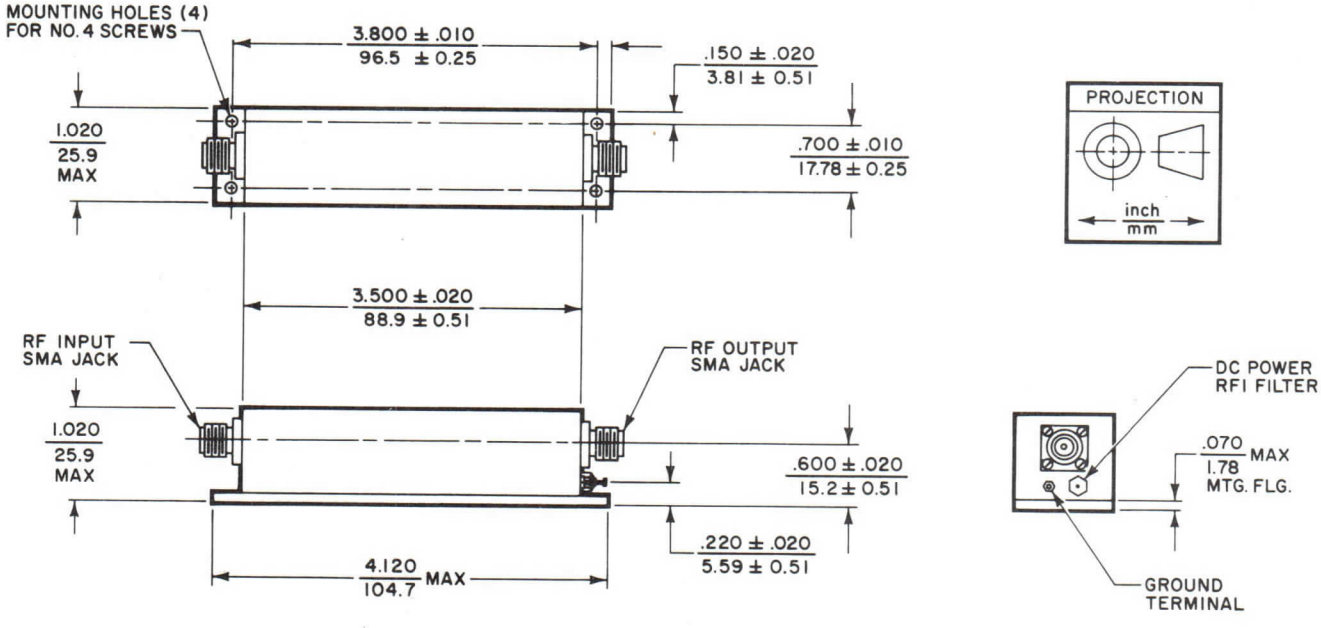

varian
solid state west division

TECHNICAL DATA

VSL-7441AP

ULTRA LOW NOISE, WIDEBAND, SOLID STATE AMPLIFIER, WITH INTEGRAL POWER SUPPLY

1.0-2.0 GHz

FEATURES

- Ultra-low-noise — < 3.5 dB
- Wide dynamic range — > +10 dBm Po
- Integral power supply
- Small size — 1.0 x 2.5 x 3.5 inches
- Meets requirements of MIL-E-5400 and MIL-E-16400

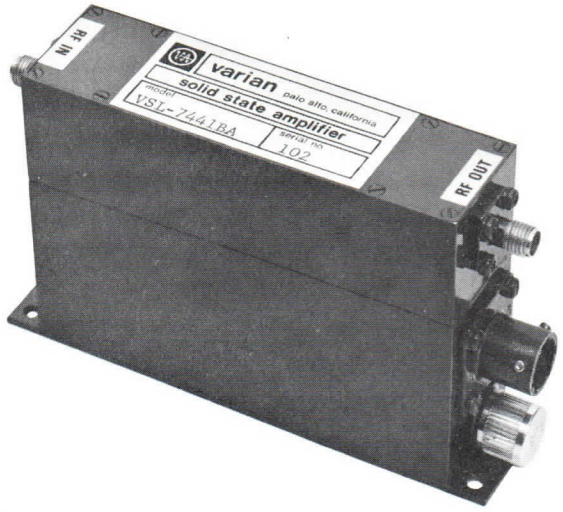

DESCRIPTION

The VSL-7441AP is an L-band member of our family of miniature ultra-low-noise, solid-state amplifiers with integral power supplies. It is intended primarily for use as a preamplifier in wideband electronic-warfare applications requiring low noise figure and high power output for maximum sensitivity and dynamic range.

The combination of the all discrete, microstripline, solid-state amplifier design and the ultra-stable, solid-state power supply assures reliable performance and extremely long life when operated under the stringent environmental requirements of MIL-E-5400 and MIL-E-16400 specifications.

GENERAL CHARACTERISTICS [1,2,3,4]

Frequency Range	1.0-2.0 GHz
Noise Figure	
Maximum	3.5 dB
Typical	3.2 dB
Power Output, at 1-dB Gain Compression Point	
Minimum	+10 dBm
Typical	+12 dBm
Small Signal Gain	
Minimum	25 dB
Typical	31 dB
Gain Variation	
Maximum	±1.0 dB
Typical	±0.5 dB
Input and Output VSWR	
Maximum	2.0:1
Typical	2.0:1
Intercept Point for 3rd Order Intermodulation Products	
Typical	+22 dBm

PRIMARY ELECTRICAL REQUIREMENTS [5]

Voltage	103-127 Vac
Frequency	50-420 Hz
Power, typical	1.2 W

ENVIRONMENTAL [6]

Vibration, up to 500 Hz	10 G
Shock, 11 ms	15 G
Temperature	-54 to +85 °C
Altitude	70,000 ft

MECHANICAL

Dimensions	See Outline Drawing
Weight	11 oz
Connectors	
R-F Input and Output, 50-Ω	SMA Jack
Primary Power	Mates with MS3116E8-4S

3096 9/73

Printed in U.S.A.

CHARACTERISTIC CURVES [1,2]

Typical performance values

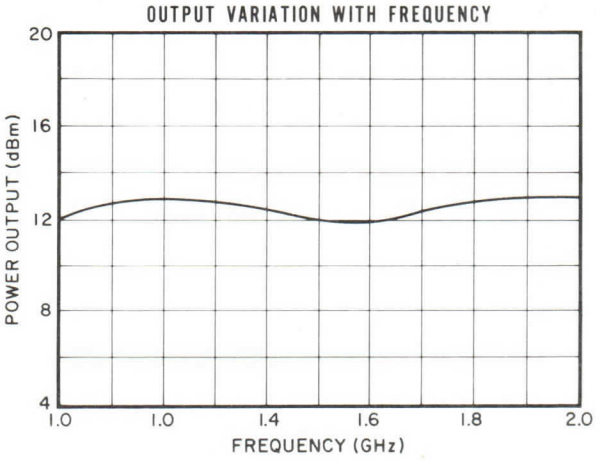

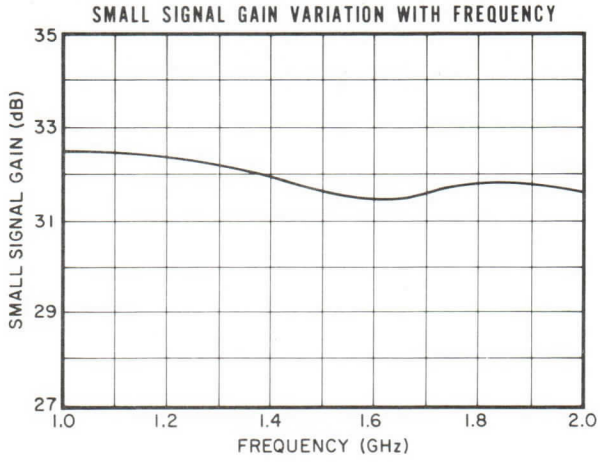

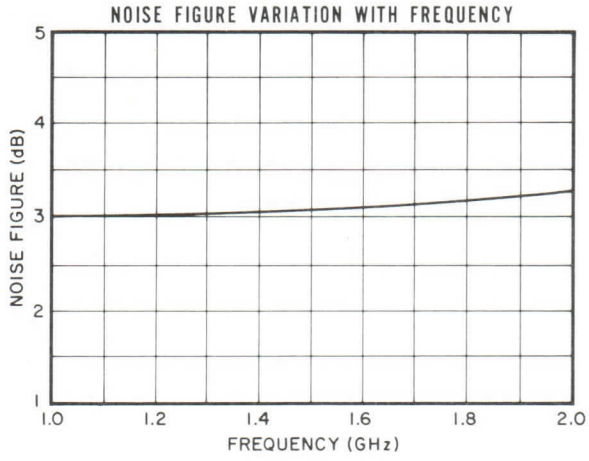

NOTES:

1. Characteristics and curves are based on performance tests. These values may change without notice as a result of additional data or product refinement. Consult the Varian Solid State West Division before using this information for final equipment design.
2. All performance characteristics can be adjusted to meet special customer requirements. In addition, units with higher or lower gain, and higher power output are available upon request.
3. R-f input limiting and overload protection is available as an option upon request.
4. Automatic gain control, AGC, is available upon request.
5. Versions operating from other line voltages can be furnished upon request. Models are also available which operate directly from d-c sources.
6. This amplifier is designed to meet the environmental requirements of MIL-E-5400 and MIL-E-16400. Special units to meet other environmental specification limits are also available.

OUTLINE DRAWING

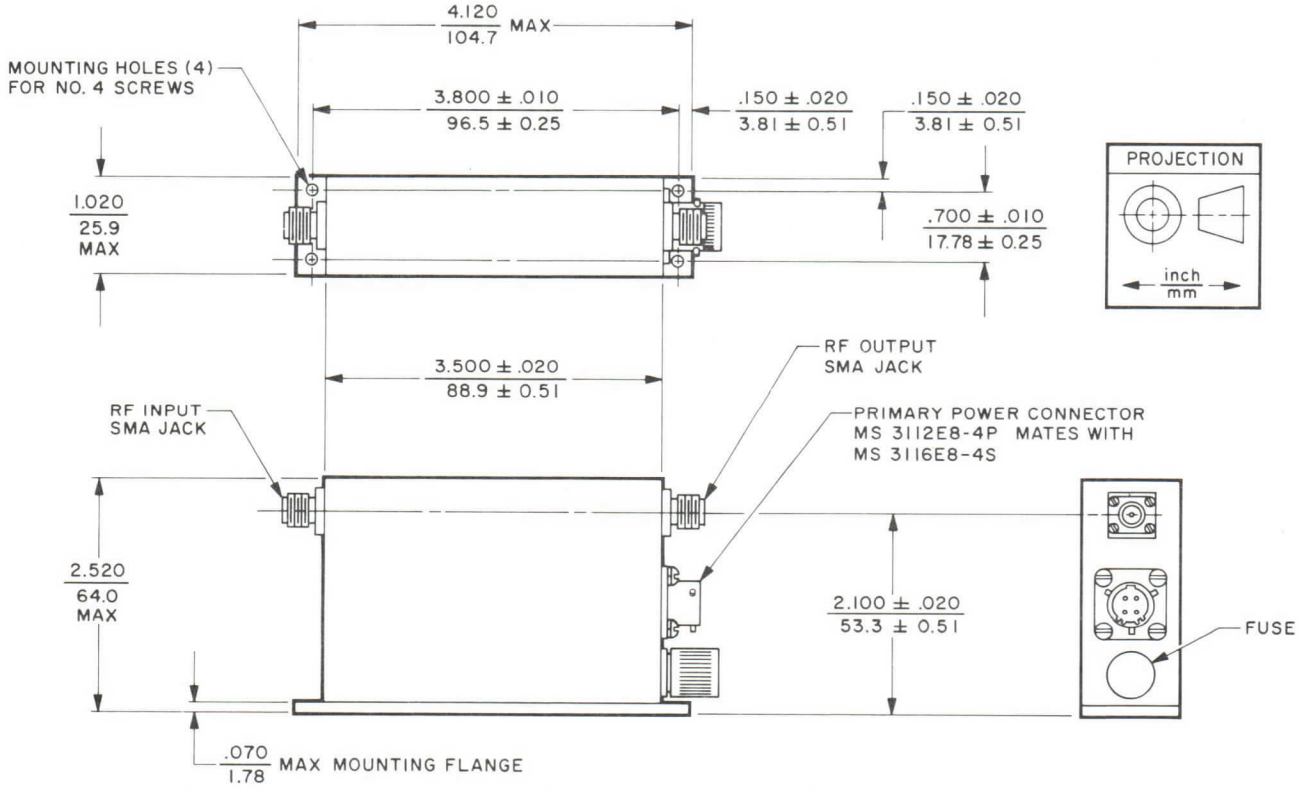

varian
solid state west division

TECHNICAL DATA

VSL-7445C

WIDEBAND LOW NOISE MEDIUM POWER MICROWAVE SOLID STATE AMPLIFIER

1.0-2.6 GHz

FEATURES

- Over 200 milliwatts output, 1.0-2.6 GHz
- Small size — 1.0 x 1.75 x 3.5 inches
- Meets MIL-E-5400 and MIL-E-16400 requirements

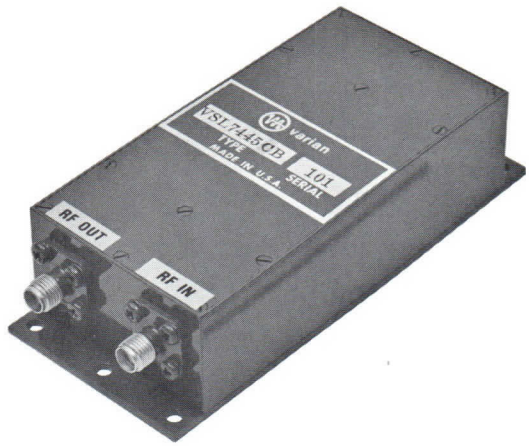

DESCRIPTION

The VSL-7445C is an extended-band member of our family of medium power, low-noise, solid-state amplifiers operating between 1.0 and 2.6 gigahertz. It is used primarily for wideband electronic-warfare applications and for use in test equipment. It delivers a high-power output with a low-noise figure for maximum sensitivity and dynamic range.

This unit is designed to meet the general requirements of MIL-E-5400 and MIL-E-16400. To provide optimum performance under typical military environmental conditions, the silicon semiconductors are hermetically sealed, and when required, active bias networks are utilized to maintain performance over wide temperature ranges.

GENERAL CHARACTERISTICS [1,2,3,4]

Frequency Range	1.0 to 2.6 GHz
Power Output, at saturation	
Minimum	+23 dBm
Typical	+25 dBm
Noise Figure	
Maximum	10.0 dB
Typical	7.5 dB
Small Signal Gain	
Minimum	30 dB
Typical	34 dB
Gain Variation	
Maximum	± 2.0 dB
Typical	+ 1.0 dB
Input and Output VSWR	
Maximum	2.0:1
Typical	1.5:1
Intercept Point for 3rd Order Intermodulation Products	
Typical	+33 dBm

PRIMARY ELECTRICAL REQUIREMENTS [5]

Voltage	+28 Vdc
Current, typical	300 mAdc

ENVIRONMENTAL [6]

Vibration, up to 500 Hz	10 G
Shock, 11 ms	15 G
Temperature	-54 to +71 °C
Altitude	70,000 ft

MECHANICAL

Dimensions	See Outline Drawing
Weight	10 oz
Connectors	
R-F Input and Output, 50-Ω	SMA Jack
Primary Power	RFI Pin Type

3026 7/73

Printed in U.S.A.

CHARACTERISTIC CURVES [1,2]

Typical performance values

OUTPUT VARIATION WITH FREQUENCY

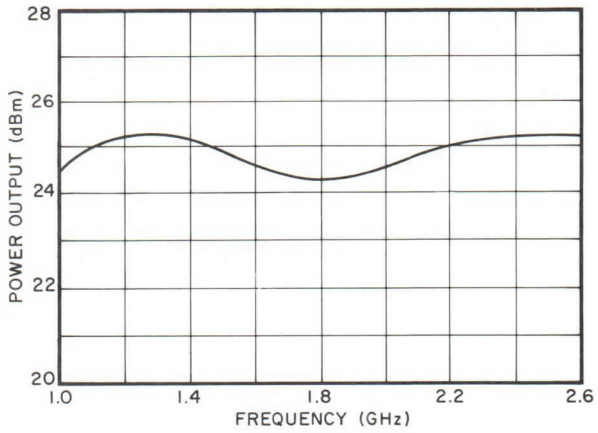

GAIN VARIATION WITH FREQUENCY

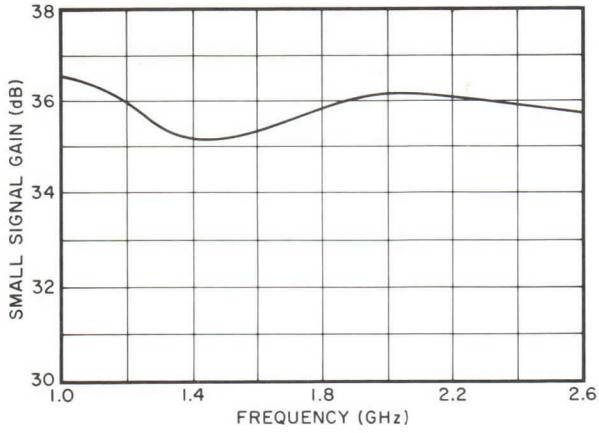

NOISE VARIATION WITH FREQUENCY

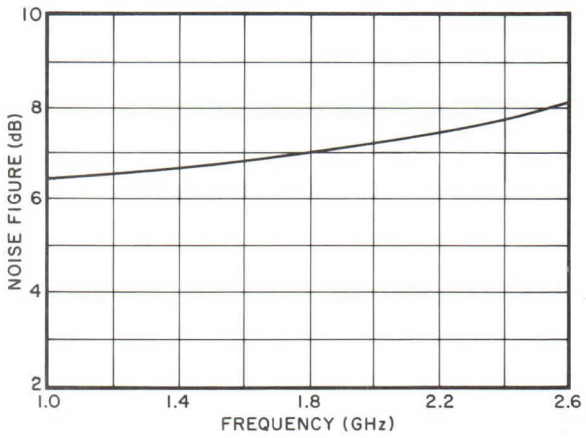

NOTES:

1. Characteristics and curves are based on performance tests. These values may change without notice as a result of additional data or product refinement. Consult the Varian Solid State West Division before using this information for final equipment design.
2. All performance characteristics can be adjusted to meet special customer requirements. In addition, units with higher or lower gain are available upon request.
3. RF input limiting and overload protection are available as an option on request.
4. Automatic gain control, AGC, is available upon request.
5. Power supplies for operation from other line voltages or d-c sources can be furnished upon request.
6. This amplifier is designed to meet the environmental requirements of MIL-E-5400 and MIL-E-16400. Special units to meet other environmental specification limits are also available.

OUTLINE DRAWING

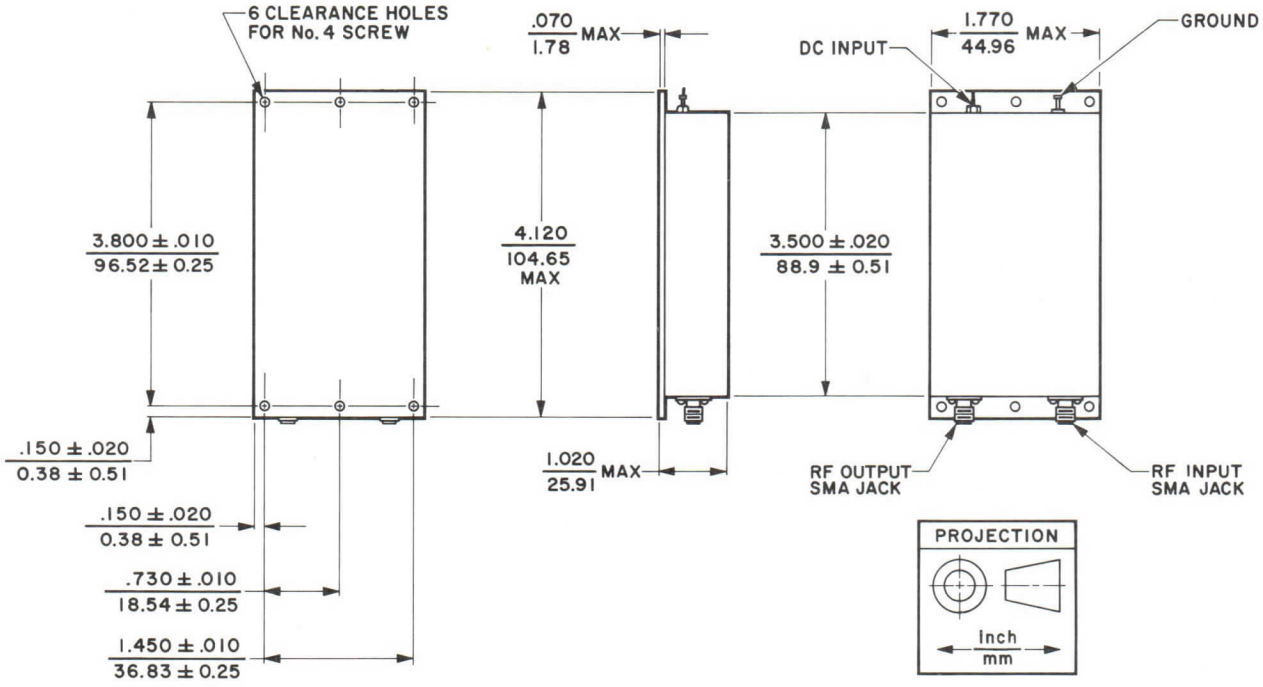

varian
solid state west division

TECHNICAL DATA

VSS-7450A

WIDEBAND LOW NOISE MICROWAVE SOLID STATE AMPLIFIER 2.0-4.0 GHz

FEATURES

- MINIATURE — 0.5 x 1.0 x 1.76 INCHES
- ULTIMATE COMBINATION OF SIZE AND PERFORMANCE
- WIDE DYNAMIC RANGE — < 7.5 dB NOISE FIGURE AT > 7 dBm POWER OUTPUT
- MEETS MIL-E-5400 AND MIL-E-16400 REQUIREMENTS

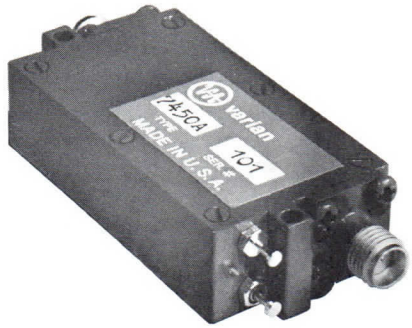

Actual size

DESCRIPTION

The VSS-7450A is the S-band member of our miniature thin-film MIC family of solid-state amplifiers and represents the ultimate in the combination of small size and volume with optimum performance.

Because of its extremely small size, it is ideally suited to satisfy the performance requirements typically demanded in high packaging density applications such as airborne/shipboard electronic-warfare and ground-based tactical systems.

The VSS-7450A is designed to operate reliably under the stringent environmental requirements of MIL-E-5400, Class 2 in ambient temperatures as high as +110 °C.

In order to satisfy the performance requirements under typical military environmental conditions, the silicon semiconductors are hermetically sealed, and miniaturized active bias networks are utilized to maintain performance over wide temperature ranges.

GENERAL CHARACTERISTICS [1,2]

Frequency Range	2.0 to 4.0 GHz
Noise Figure	
Maximum	7.5 dB
Typical	6.5 dB
Power Output, at 1-dB Gain Compression Point	
Minimum	+7 dBm
Typical	+10 dBm
Small Signal Gain	
Minimum	28 dB
Typical	30 dB
Gain Variation	
Maximum	± 1.0 dB
Typical	± 0.5 dB
Input and Output VSWR	
Maximum	1.5:1
Typical	1.3:1
Intercept Point for 3rd Order Intermodulation Products	
Typical	+20 dBm

2968 2/73

Printed in U.S.A.

GENERAL CHARACTERISTICS [1,2]

PRIMARY ELECTRICAL REQUIREMENTS [3,4]

Voltage	15 Vdc
Current	160 mAdc
Power, maximum	2.4 W

ENVIRONMENTAL [5]

Vibration, up to 500 Hz	10 G
Shock, 11 ms	15 G
Temperature	-54 to +110 °C
Altitude	70,000 ft

MECHANICAL

Dimensions	See Outline Drawing
Weight	1.5 oz
Connectors	
R-F Input and Output, 50-Ω	SMA Jack
Power Supply	Pin Type

CHARACTERISTIC CURVES [1,2]

Typical performance values

OUTPUT VARIATION WITH FREQUENCY

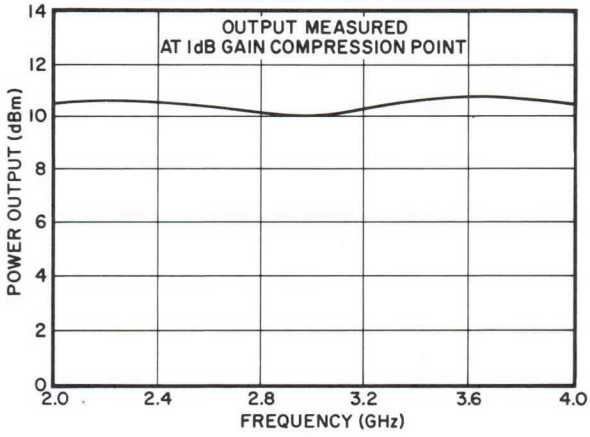

GAIN VARIATION WITH FREQUENCY

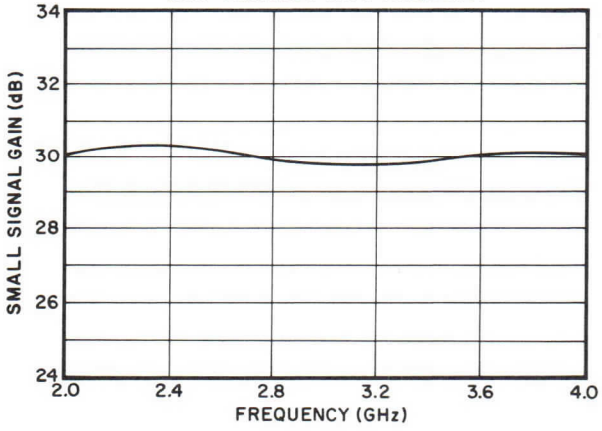

NOISE FIGURE VARIATION WITH FREQUENCY

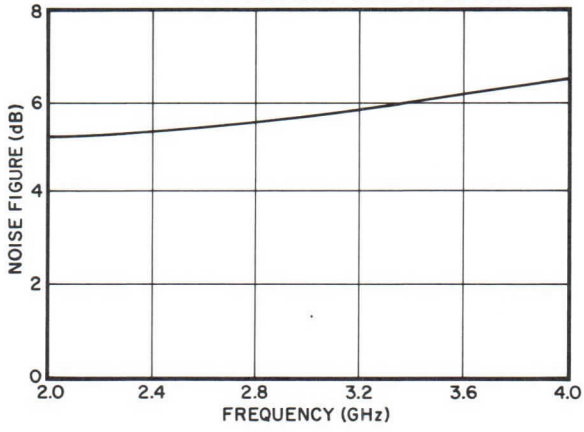

NOTES:

1. Characteristics and curves are based on performance tests. These values may change without notice as a result of additional data or product refinement. Consult the Varian Solid State West Division before using this information for final equipment design.

2. All performance characteristics can be adjusted to meet special customer requirements. In addition, units with higher or lower gain, and higher power output are available upon request.

3. Power supplies for operation from other line voltages or d-c sources can be furnished upon request.

4. Automatic gain control, AGC, is available upon request.

5. This amplifier is designed to meet the environmental requirements of MIL-E-5400 and MIL-E-16400. Special units to meet other environmental specification limits are also available.

OUTLINE DRAWING

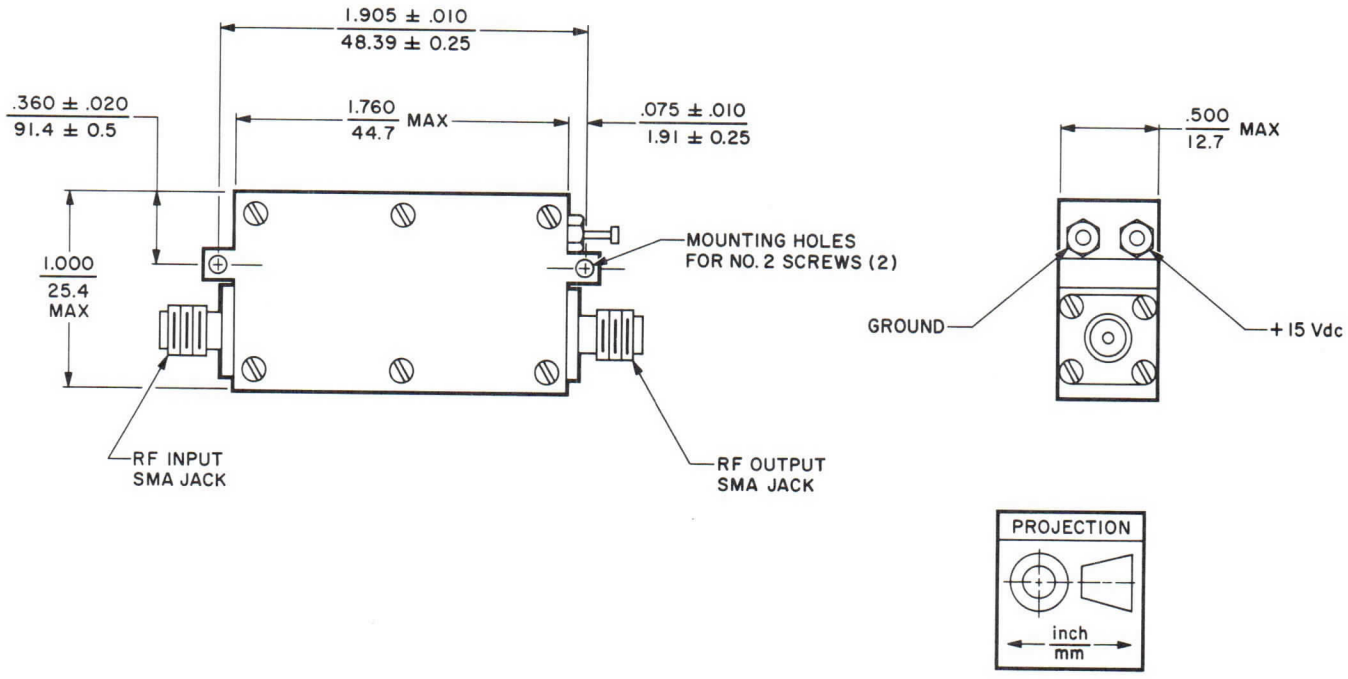

varian
solid state west division

TECHNICAL DATA

VSS-7451A

ULTRA LOW NOISE WIDEBAND MICROWAVE SOLID STATE AMPLIFIER

2.0-4.0 GHz

FEATURES

- Ultra low-noise — < 5.5 dB
- Wide dynamic range — > + 10 dBm Po
- Small Size — 1.0 x 1.0 x 3.5 inches
- Meets requirements of MIL-E-5400 and MIL-E-16400

DESCRIPTION

The VSS-7451A is an S-band member of our family of miniature ultra low-noise, solid-state amplifiers. It is primarily intended for use as a preamplifier in wideband electronic-warfare applications requiring low-noise figure and high-power output for maximum sensitivity and dynamic range.

The all discrete microstripline solid-state design assures reliable performance and extremely long life under the stringent environmental requirements of MIL-E-5400 and MIL-E-16400 specifications.

GENERAL CHARACTERISTICS [1,2,3,4]

Frequency Range	2.0-4.0 GHz
Noise Figure	
Maximum	5.5 dB
Typical	5.0 dB
Power Output, at 1-dB Gain Compression Point	
Minimum	+10 dBm
Typical	+11 dBm
Small Signal Gain	
Minimum	25 dB
Typical	31 dB
Gain Variation	
Maximum	±1.0 dB
Typical	±0.5 dB
Input and Output VSWR	
Maximum	2.0:1
Typical	2.0:1
Intercept Point for 3rd Order Intermodulation Products	
Typical	+21 dBm

PRIMARY ELECTRICAL REQUIREMENTS [5]

Voltage	+15 Vdc
Current, typical	65 mAdc

ENVIRONMENTAL [6]

Vibration, up to 500 Hz	10 G
Shock, 11 ms	15 G
Temperature	-54 to +85 °C
Altitude	70,000 ft

MECHANICAL

Dimensions	See Outline Drawing
Weight	3 oz
Connectors	
R-F Input and Output, 50-Ω	SMA Jack
Primary Power	RFI Pin Type

3079 8/73

Printed in U.S.A.

CHARACTERISTIC CURVES[1]
Typical performance values

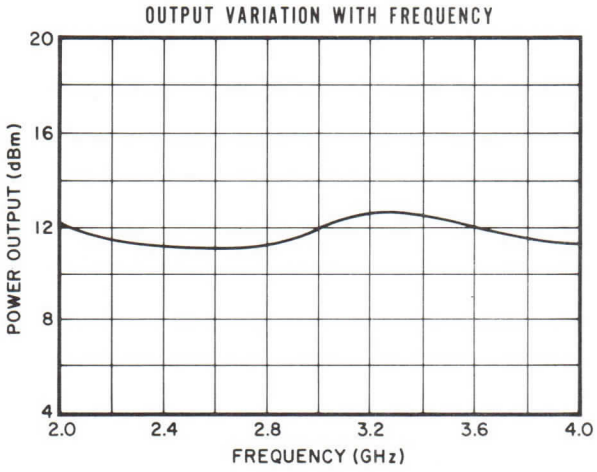

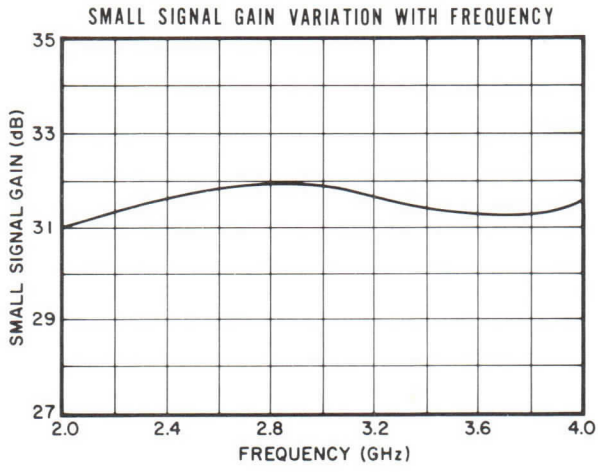

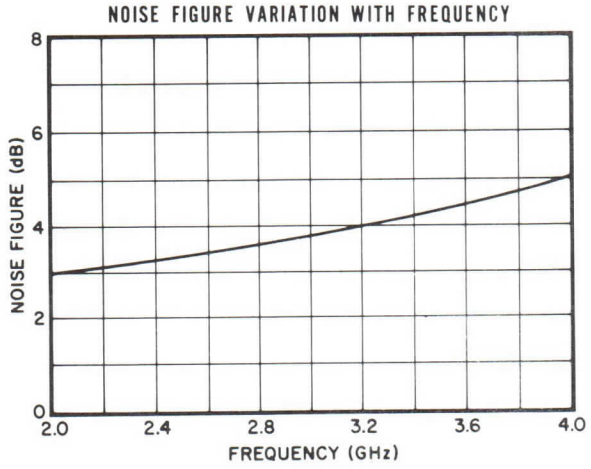

NOTES:

1. Characteristics and curves are based on performance tests. These values may change without notice as a result of additional data or product refinement. Consult the Varian Solid State West Division before using this information for final equipment design.
2. All performance characteristics can be adjusted to meet special customer requirements. In addition, units with higher or lower gain, and higher power output are available upon request.
3. R-f input limiting and overload protection is available as an option upon request.
4. Automatic gain control, AGC, is available upon request.
5. Versions operating from other d-c sources can be furnished upon request. Optional integral power supplies are available for line voltage operations.
6. This amplifier is designed to meet the environmental requirements of MIL-E-5400 and MIL-E-16400. Special units to meet other environmental specification limits are also available.

OUTLINE DRAWING

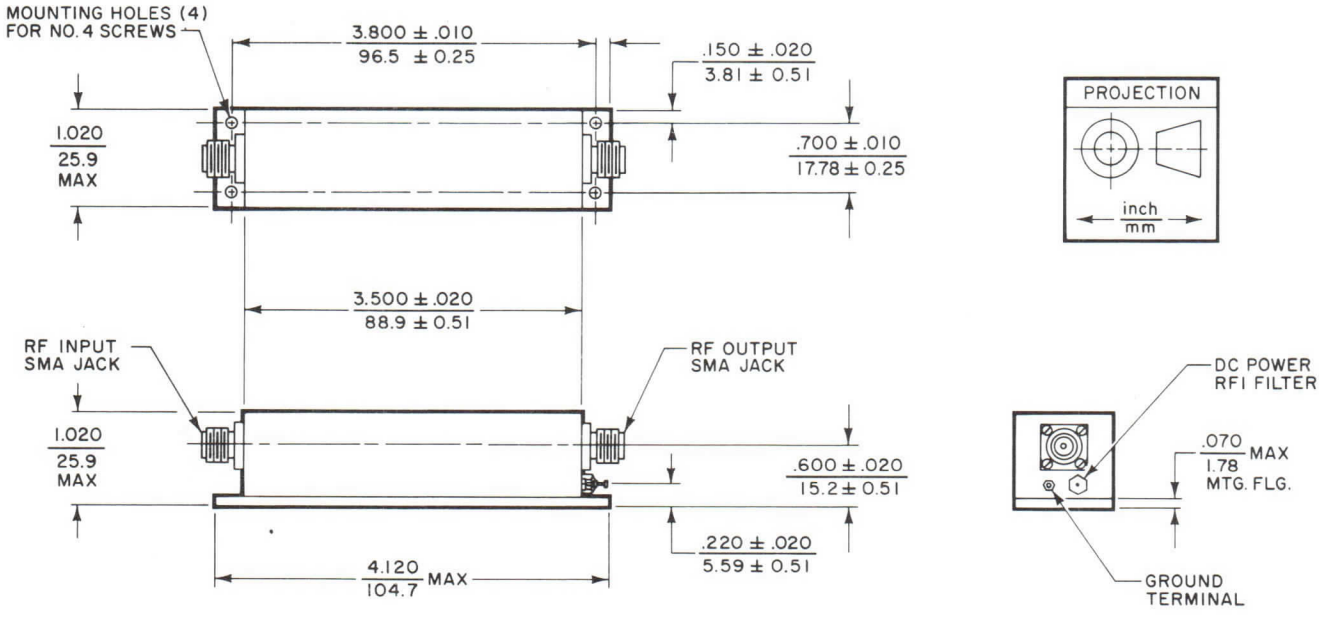

varian
solid state west division

TECHNICAL DATA

VSS-7451AP

ULTRA LOW NOISE, WIDEBAND, SOLID STATE AMPLIFIER, WITH INTEGRAL POWER SUPPLY

2.0-4.0 GHz

FEATURES

- Ultra-low-noise — < 5.5 dB
- Wide dynamic range — >+10 dBm Po
- Integral power supply
- Small size — 1.0 x 2.5 x 3.5 inches
- Meets requirements of MIL-E-5400 and MIL-E-16400

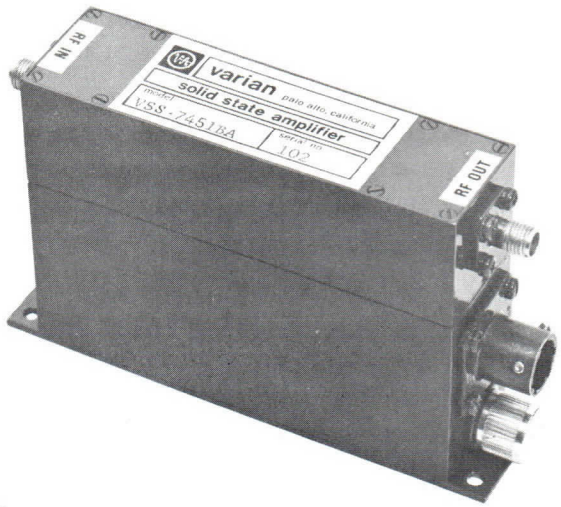

DESCRIPTION

The VSS-7451AP is an S-band member of our family of miniature ultra-low-noise, solid-state amplifiers with integral power supplies. It is intended primarily for use as a preamplifier in wideband electronic-warfare applications requiring low noise figure and high power output for maximum sensitivity and dynamic range.

The combination of the all discrete, microstripline, solid-state amplifier design and the ultra-stable, solid-state power supply assures reliable performance and extremely long life when operated under the stringent environmental requirements of MIL-E-5400 and MIL-E-16400 specifications.

GENERAL CHARACTERISTICS[1,2,3,4]

Frequency Range	2.0-4.0 GHz
Noise Figure	
Maximum	5.5 dB
Typical	5.0 dB
Power Output, at 1-dB Gain Compression Point	
Minimum	+10 dBm
Typical	+11 dBm
Small Signal Gain	
Minimum	25 dB
Typical	31 dB
Gain Variation	
Maximum	±1.0 dB
Typical	±0.5 dB
Input and Output VSWR	
Maximum	2.0:1
Typical	2.0:1
Intercept Point for 3rd Order Intermodulation Products	
Typical	+21 dBm

PRIMARY ELECTRICAL REQUIREMENTS[5]

Voltage	103-127 Vac
Frequency	50-420 Hz
Power, typical	1.4 W

ENVIRONMENTAL[5]

Vibration, up to 500 Hz	10 G
Shock, 11 ms	15 G
Temperature	-54 to +85 °C
Altitude	70,000 ft

MECHANICAL

Dimensions	See Outline Drawing
Weight	11 oz
Connectors	
R-F Input and Output, 50-Ω	SMA Jack
Primary Power	Mates with MS3116E8-4S

3097 9/73

Printed in U.S.A.

CHARACTERISTIC CURVES

Typical performance values

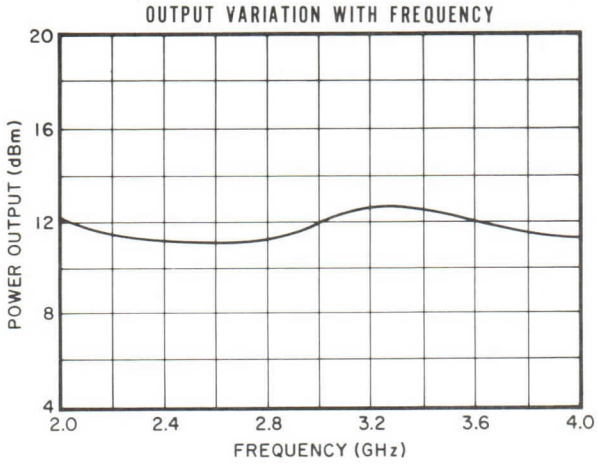

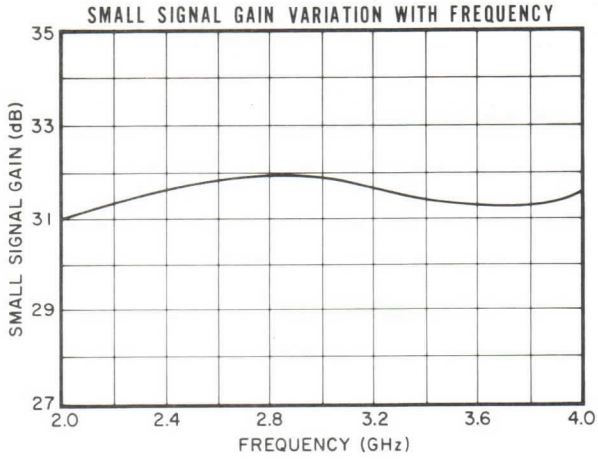

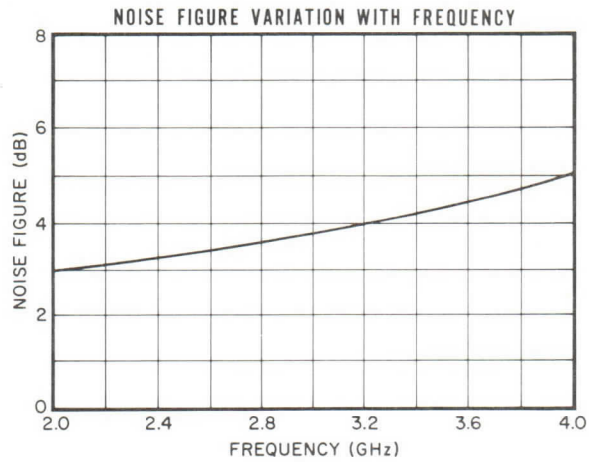

NOTES:

1. Characteristics and curves are based on performance tests. These values may change without notice as a result of additional data or product refinement. Consult the Varian Solid State West Division before using this information for final equipment design.
2. All performance characteristics can be adjusted to meet special customer requirements. In addition, units with higher or lower gain, and higher power output are available upon request.
3. R-f input limiting and overload protection is available as an option upon request.
4. Automatic gain control, AGC, is available upon request.
5. Versions operating from other line voltages can be furnished upon request. Models are also available which operate directly from d-c sources.
6. This amplifier is designed to meet the environmental requirements of MIL-E-5400 and MIL-E-16400. Special units to meet other environmental specification limits are also available.

OUTLINE DRAWING

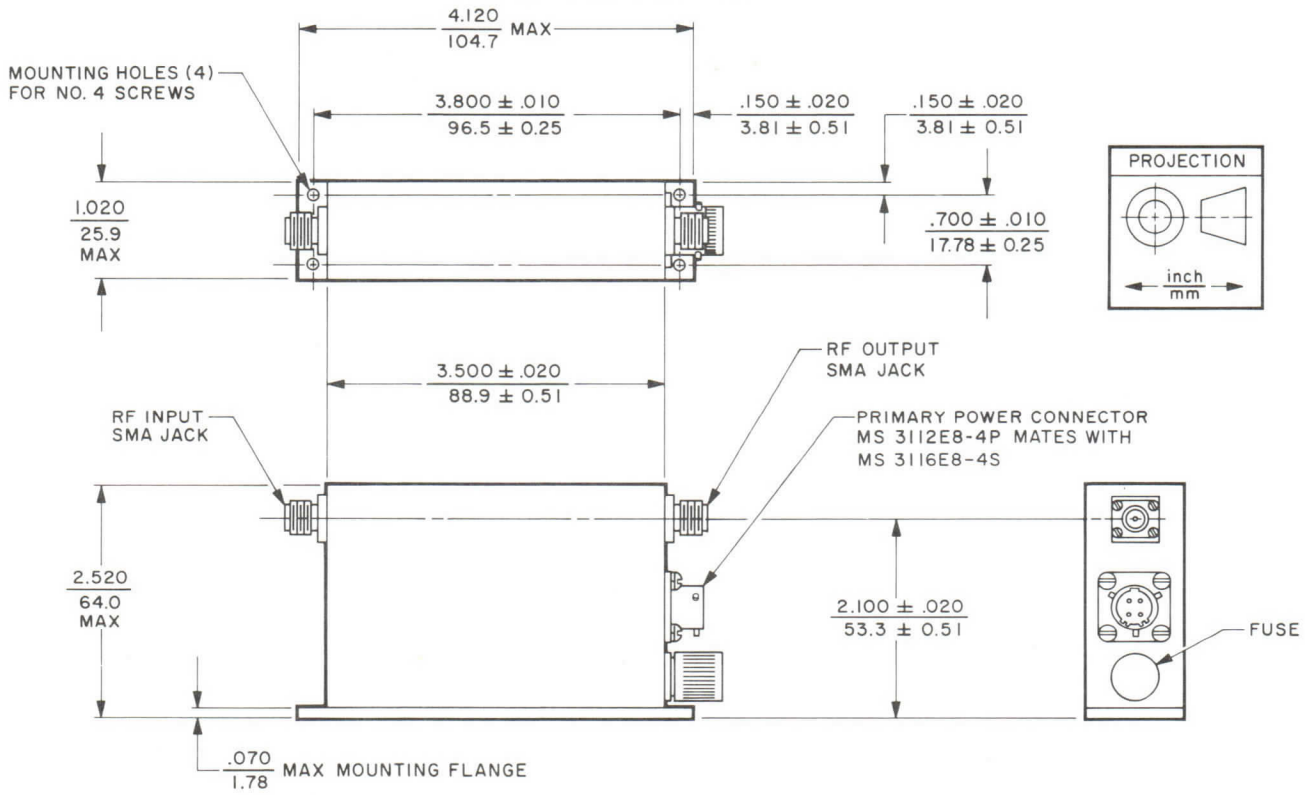

varian
solid state west division

TECHNICAL DATA

VSS-7451J

ULTRA LOW NOISE WIDEBAND MICROWAVE SOLID STATE AMPLIFIER

2.0-4.0 GHz

FEATURES

- Ultra low-noise — < 4.5 dB
- Wide dynamic range — > + 10 dBm Po
- Small Size — 1.0 x 1.0 x 3.5 inches
- Meets requirements of MIL-E-5400 and MIL-E-16400

DESCRIPTION

The VSS-7451J is an S-band member of our family of miniature ultra low-noise, solid-state amplifiers. It is primarily intended for use as a preamplifier in wideband electronic-warfare applications requiring ultra low noise figure and high power output for maximum sensitivity and dynamic range.

The all discrete microstripline solid-state design assures reliable performance and extremely long life under the stringent environmental requirements of MIL-E-5400 and MIL-E-16400 specifications.

GENERAL CHARACTERISTICS [1,2,3,4]

Frequency Range	2.0-4.0 GHz
Noise Figure	
Maximum	4.5 dB
Typical	4.0 dB
Power Output, at 1-dB Gain Compression Point	
Minimum	+10 dBm
Typical	+11 dBm
Small Signal Gain	
Minimum	25 dB
Typical	30 dB
Gain Variation	
Maximum	±1.0 dB
Typical	±0.5 dB
Input and Output VSWR	
Maximum	2.0:1
Typical	2.0:1
Intercept Point for 3rd Order Intermodulation Products	
Typical	+21 dBm

PRIMARY ELECTRICAL REQUIREMENTS [5]

Voltage	+15 Vdc
Current, typical	80 mAdc

ENVIRONMENTAL [a]

Vibration, up to 500 Hz	10 G
Shock, 11 ms	15 G
Temperature	-54 to +85 °C
Altitude	70,000 ft

MECHANICAL

Dimensions	See Outline Drawing
Weight	3 oz
Connectors	
R-F Input and Output, 50-Ω	SMA Jack
Primary Power	RFI Pin Type

3132 11/73

Printed in U.S.A.

CHARACTERISTIC CURVES[1]

Typical performance values

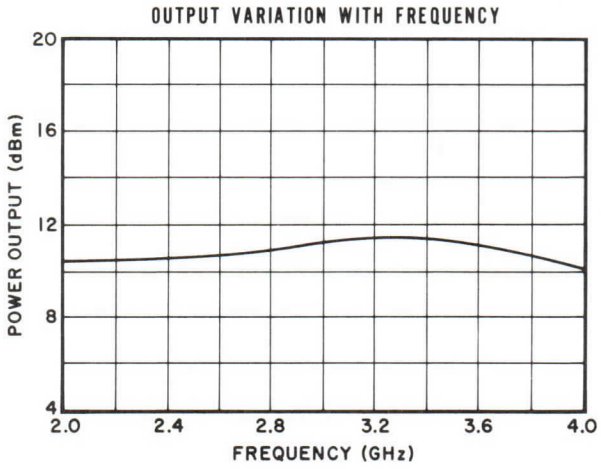

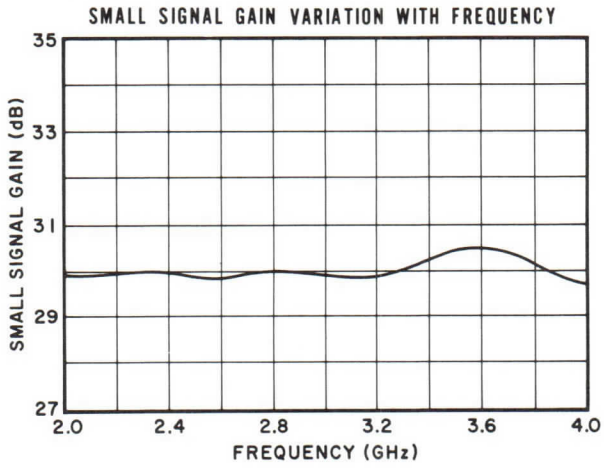

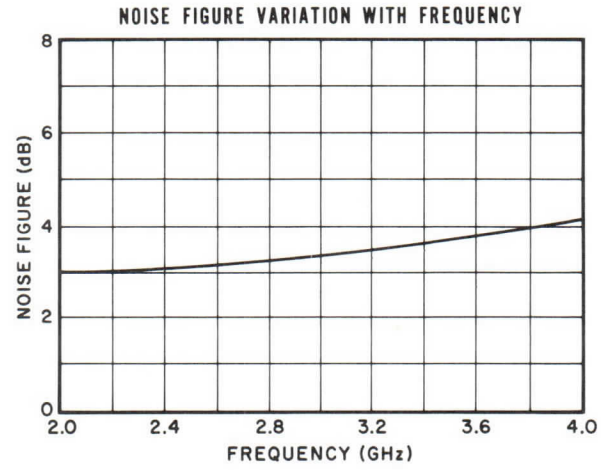

NOTES:

1. Characteristics and curves are based on performance tests. These values may change without notice as a result of additional data or product refinement. Consult the Varian Solid State West Division before using this information for final equipment design.
2. All performance characteristics can be adjusted to meet special customer requirements. In addition, units with higher or lower gain, and higher power output are available upon request.
3. R-f input limiting and overload protection is available as an option upon request.
4. Automatic gain control, AGC, is available upon request.
5. Versions operating from other d-c sources can be furnished upon request. Optional integral power supplies are available for line voltage operations.
6. This amplifier is designed to meet the environmental requirements of MIL-E-5400 and MIL-E-16400. Special units to meet other environmental specification limits are also available.

OUTLINE DRAWING

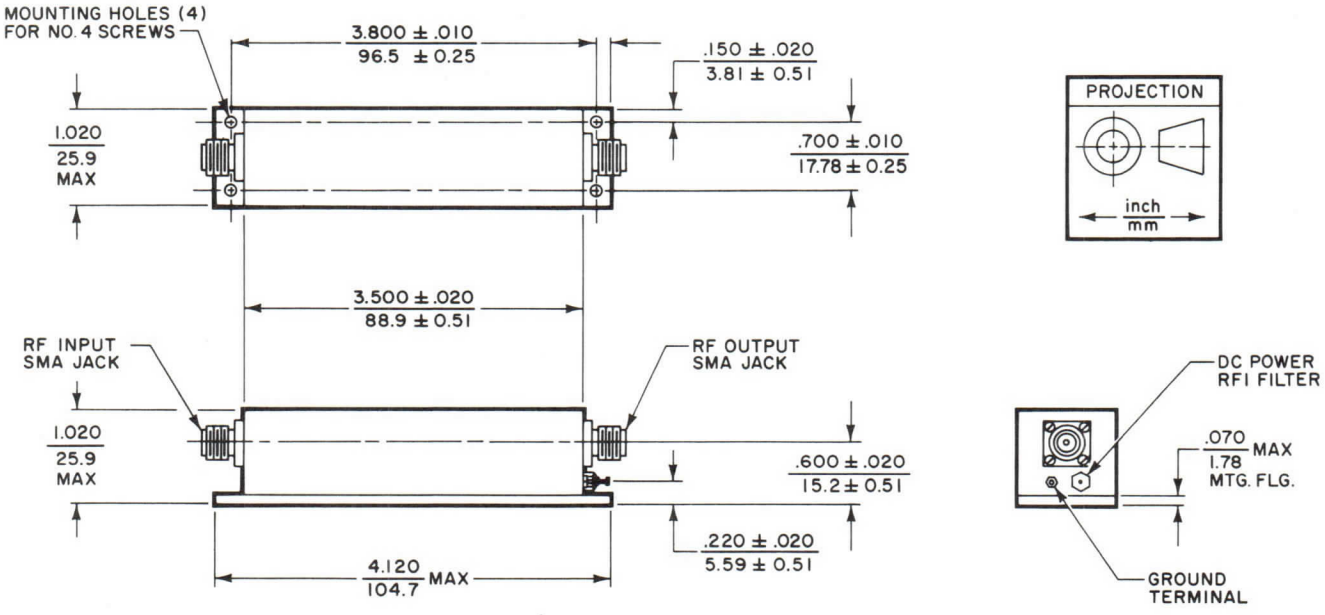

varian
solid state west division

TECHNICAL DATA

VSS-7451JP

ULTRA LOW NOISE, WIDEBAND, SOLID STATE AMPLIFIER, WITH INTEGRAL POWER SUPPLY

2.0-4.0 GHz

FEATURES

- Ultra-low-noise — < 4.5 dB
- Wide dynamic range — >+10 dBm Po
- Integral power supply
- Small size — 1.0 x 2.5 x 3.5 inches
- Meets requirements of MIL-E-5400 and MIL-E-16400

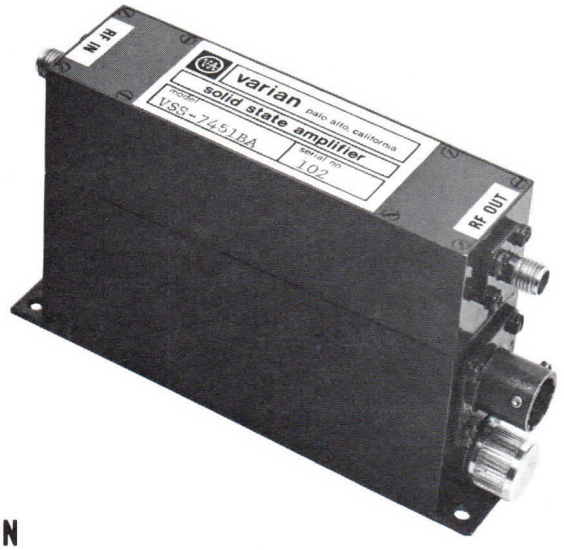

DESCRIPTION

The VSS-7451JP is an S-band member of our family of miniature ultra low-noise, solid-state amplifiers with integral power supplies. It is intended primarily for use as a preamplifier in wideband electronic-warfare applications requiring ultra low noise figure and high power output for maximum sensitivity and dynamic range.

The combination of the all discrete, microstripline, solid-state amplifier design and the ultra-stable, solid-state power supply assures reliable performance and extremely long life when operated under the stringent environmental requirements of MIL-E-5400 and MIL-E-16400 specifications.

GENERAL CHARACTERISTICS[1,2,3,4]

Frequency Range	2.0-4.0 GHz
Noise Figure	
Maximum	4.5 dB
Typical	4.0 dB
Power Output, at 1-dB Gain Compression Point	
Minimum	+10 dBm
Typical	+11 dBm
Small Signal Gain	
Minimum	25 dB
Typical	30 dB
Gain Variation	
Maximum	±1.0 dB
Typical	±0.5 dB
Input and Output VSWR	
Maximum	2.0:1
Typical	2.0:1
Intercept Point for 3rd Order Intermodulation Products	
Typical	+21 dBm

PRIMARY ELECTRICAL REQUIREMENTS[5]

Voltage	103-127 Vac
Frequency	50-420 Hz
Power, typical	1.4 W

ENVIRONMENTAL[6]

Vibration, up to 500 Hz	10 G
Shock, 11 ms	15 G
Temperature	-54 to +85 °C
Altitude	70,000 ft

MECHANICAL

Dimensions	See Outline Drawing
Weight	11 oz
Connectors	
R-F Input and Output, 50-Ω	SMA Jack
Primary Power	Mates with MS3116E8-4S

3133 11/73

Printed in U.S.A.

CHARACTERISTIC CURVES[1]

Typical performance values

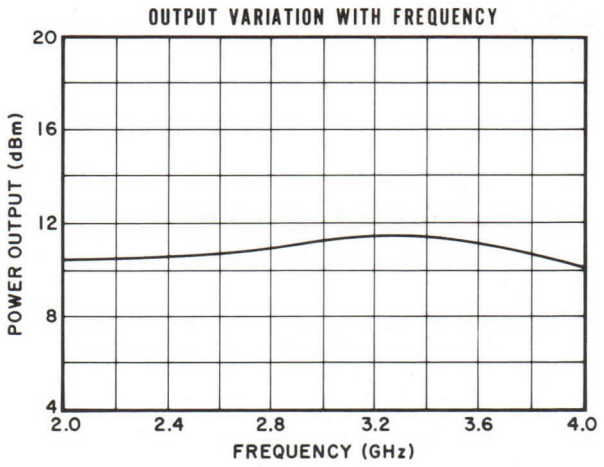

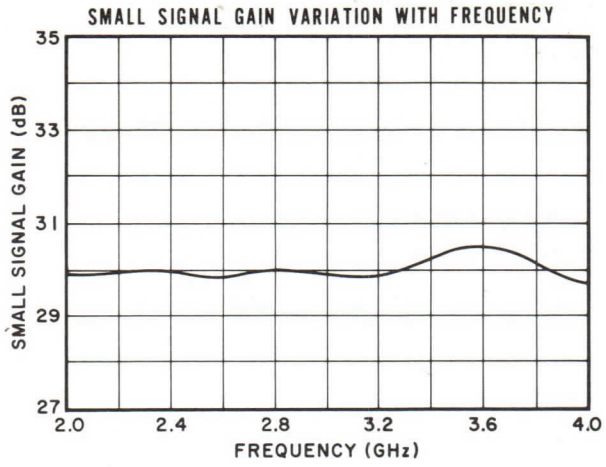

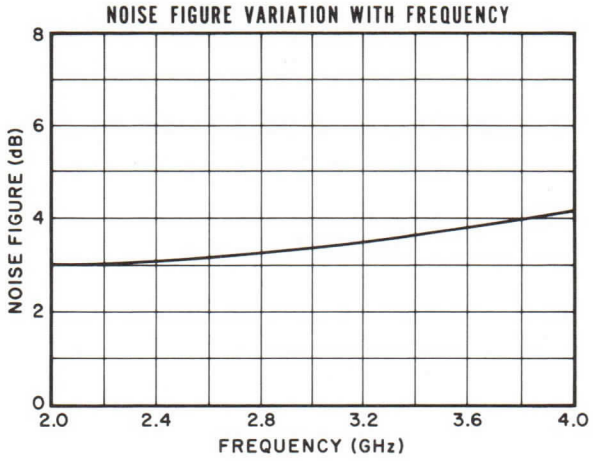

NOTES:

1. Characteristics and curves are based on performance tests. These values may change without notice as a result of additional data or product refinement. Consult the Varian Solid State West Division before using this information for final equipment design.
2. All performance characteristics can be adjusted to meet special customer requirements. In addition, units with higher or lower gain, and higher power output are available upon request.
3. R-f input limiting and overload protection is available as an option upon request.
4. Automatic gain control, AGC, is available upon request.
5. Versions operating from other line voltages can be furnished upon request. Models are also available which operate directly from d-c sources.
6. This amplifier is designed to meet the environmental requirements of MIL-E-5400 and MIL-E-16400. Special units to meet other environmental specification limits are also available.

OUTLINE DRAWING

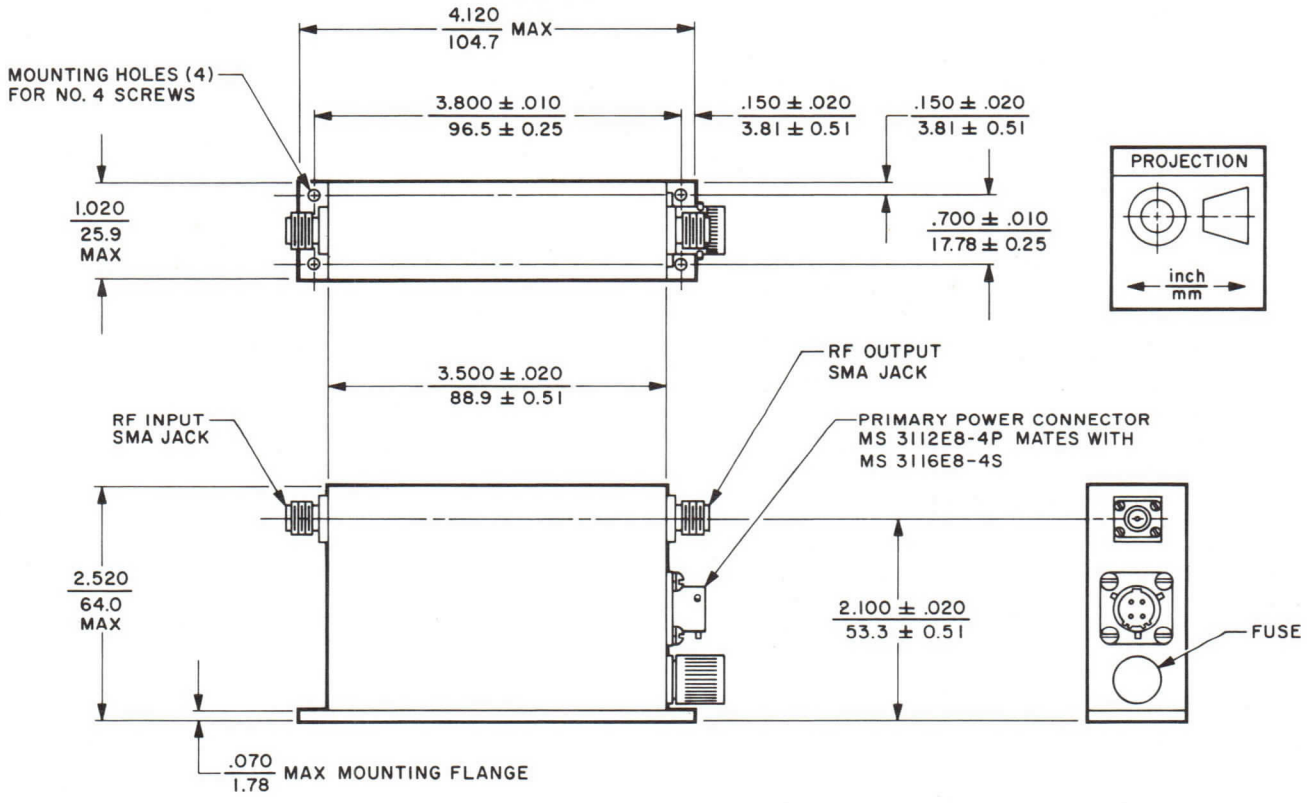

varian
solid state west division

TECHNICAL DATA

VSS-7455A

WIDEBAND, LOW NOISE MEDIUM POWER MICROWAVE SOLID STATE AMPLIFIER

2-4 GHz

FEATURES

- Over 100 milliwatts output, 2-4 GHz
- Small size — 1.0 x 2.5 x 4.25 inches
- Meets MIL-E-5400 and MIL-E-16400 requirements

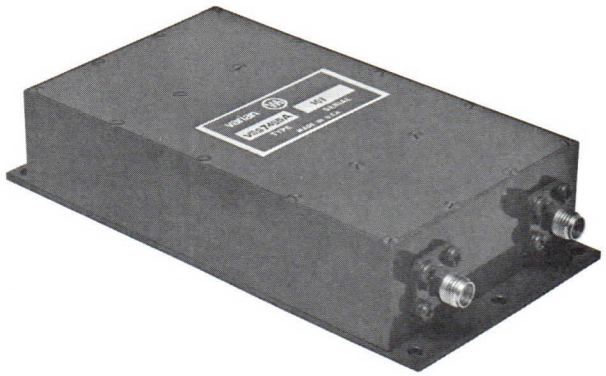

DESCRIPTION

The VSS-7455A is the S-band member of our family of medium-power, low-noise, solid-state amplifiers. It is used primarily as an amplifier in wideband electronic warfare applications and in test equipment. It delivers a high-power output with a low-noise figure for maximum sensitivity and dynamic range.

This unit is designed to meet the general requirements of MIL-E-5400 and MIL-E-16400. To provide optimum performance under typical military environmental conditions, the silicon semiconductors are hermetically sealed, and when required, active bias networks are utilized to maintain performance over wide temperature ranges.

GENERAL CHARACTERISTICS [1,2,3,4]

Frequency Range	2-4 GHz
Power Output, at saturation	
Minimum	+20 dBm
Typical	+22 dBm
Noise Figure	
Maximum	8.5 dB
Typical	6.5 dB
Small Signal Gain	
Minimum	35 dB
Typical	38 dB
Gain Variation	
Maximum	± 2 dB
Typical	± 1 dB
Input and Output VSWR	
Maximum	2.5:1
Typical	2.0:1
Intercept Point for 3rd Order Intermodulation Products	
Typical	+27 dBm

PRIMARY ELECTRICAL REQUIREMENTS [5]

Voltage	+28 Vdc
Current, typical	350 mAdc

ENVIRONMENTAL [6]

Vibration, up to 500 Hz	10 G
Shock, 11 ms	15 G
Temperature	-54 to +71 °C
Altitude	70,000 ft

MECHANICAL

Dimensions	See Outline Drawing
Weight	10 oz
Connectors	
R-F Input and Output, 50-Ω	SMA Jack
Primary Power	RFI Pin Type

3052 7/73

Printed in U.S.A.

CHARACTERISTIC CURVES[1,2]

Typical performance values

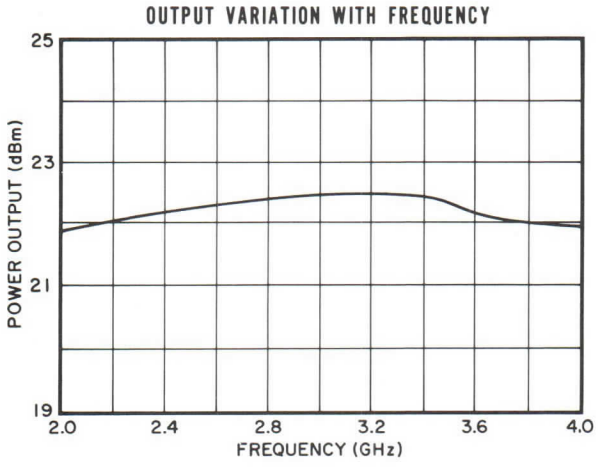

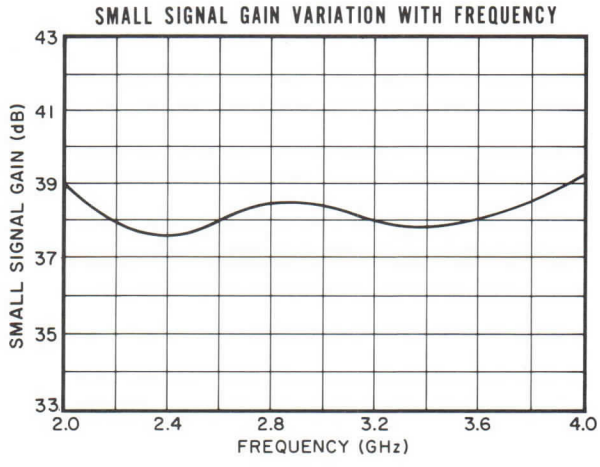

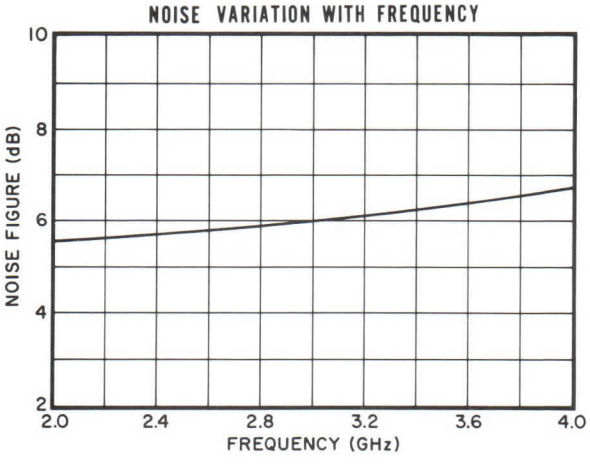

NOTES:

1. Characteristics and curves are based on performance tests. These values may change without notice as a result of additional data or product refinement. Consult the Varian Solid State West Division before using this information for final equipment design.
2. All performance characteristics can be adjusted to meet special customer requirements. In addition, units with higher or lower gain are available upon request.
3. RF input limiting and overload protection is available as an option on request.
4. Automatic gain control, AGC, is available upon request.
5. Power supplies for operation from other line voltages or d-c sources can be furnished upon request.
6. This amplifier is designed to meet the environmental requirements of MIL-E-5400 and MIL-E-16400. Special units to meet other environmental specification limits are also available.

OUTLINE DRAWING

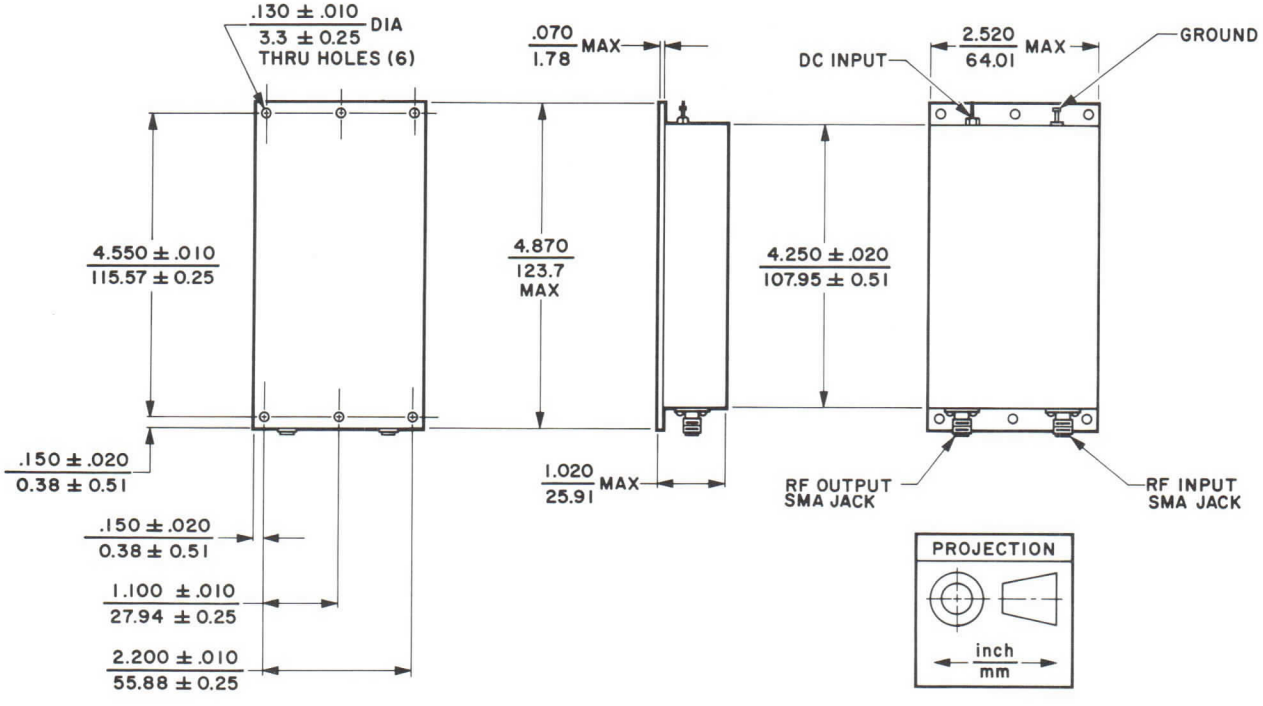

varian
solid state west division

TECHNICAL DATA

VSS-7455C

LOW NOISE
MEDIUM POWER MICROWAVE
SOLID STATE AMPLIFIER

2.8-3.6 GHz

FEATURES

- Over 400 milliwatts output, 2.8-3.6 GHz
- Small size — 1.0 x 2.5 x 4.25 inches
- Meets MIL-E-5400 and MIL-E-16400 requirements

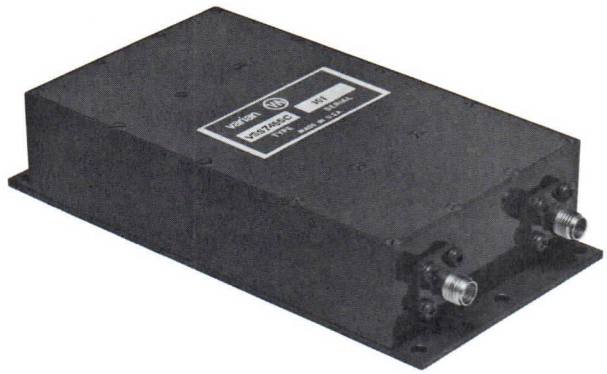

DESCRIPTION

The VSS-7455C is an S-band member of our family of medium-power, low-noise, solid-state amplifiers. It is ideal for use as a radar driver and as an augmentor that requires high-power output capabilities (typically greater than 27 dBm).

This unit is designed to meet the general requirements of MIL-E-5400 and MIL-E-16400. To provide optimum performance under typical military environmental conditions, the silicon semiconductors are hermetically sealed, and when required, active bias networks are utilized to maintain performance over wide temperature ranges.

GENERAL CHARACTERISTICS [1,2,3,4]

Frequency Range	2.8-3.6 GHz
Power Output, at saturation	
Minimum	+26 dBm
Typical	+27 dBm
Noise Figure	
Maximum	8.0 dB
Typical	6.5 dB
Small Signal Gain	
Minimum	36 dB
Typical	39 dB
Gain Variation	
Maximum	±2 dB
Typical	±1 dB
Input and Output VSWR	
Maximum	2.5:1
Typical	2.0:1
Intercept Point for 3rd Order Intermodulation Products	
Typical	+32 dBm

PRIMARY ELECTRICAL REQUIREMENTS [5]

Voltage	+28 Vdc
Current, typical	500 mAdc

ENVIRONMENTAL [6]

Vibration, up to 500 Hz	10 G
Shock, 11 ms	15 G
Temperature	-54 to +71 °C
Altitude	70,000 ft

MECHANICAL

Dimensions	See Outline Drawing
Weight	10 oz
Connectors	
R-F Input and Output, 50-Ω	SMA Jack
Primary Power	RFI Pin Type

3027 7/73

Printed in U.S.A.

CHARACTERISTIC CURVES [1,2]

Typical performance values

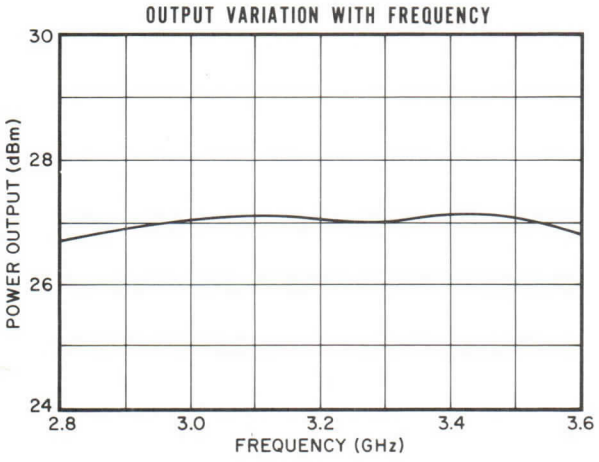

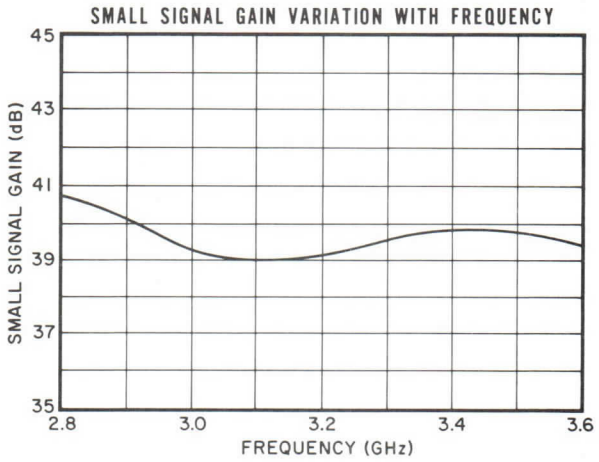

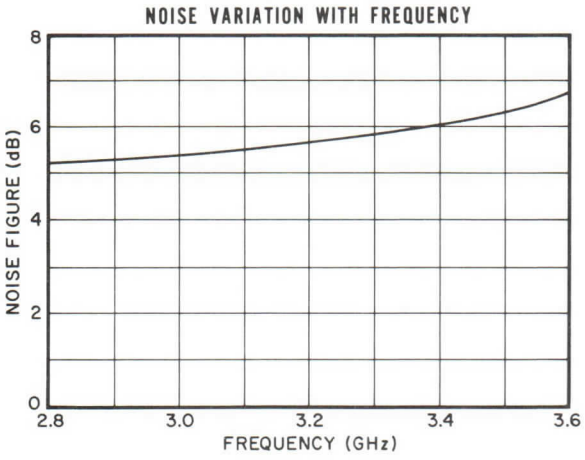

NOTES:

1. Characteristics and curves are based on performance tests. These values may change without notice as a result of additional data or product refinement. Consult the Varian Solid State West Division before using this information for final equipment design.
2. All performance characteristics can be adjusted to meet special customer requirements. In addition, units with higher or lower gain are available upon request.
3. RF input limiting and overload protection is available as an option on request.
4. Automatic gain control, AGC, is available upon request.
5. Power supplies for operation from other line voltages or d-c sources can be furnished upon request.
6. This amplifier is designed to meet the environmental requirements of MIL-E-5400 and MIL-E-16400. Special units to meet other environmental specification limits are also available.

OUTLINE DRAWING

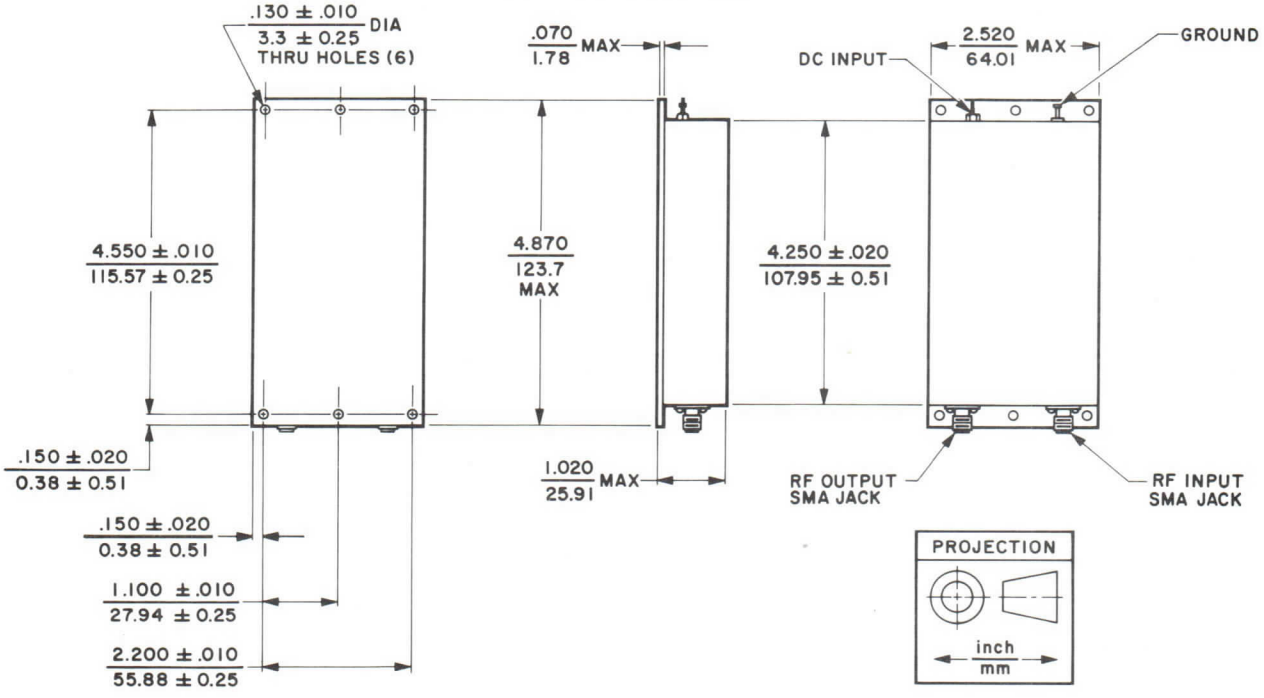

varian

PRELIMINARY
TECHNICAL DATA

9721
Series

SPST
SWITCH/ATTENUATOR
0.1-18.0 GHz

DESCRIPTION

Varian 9721 Series attenuator/switches are coaxial, current-controlled PIN diode devices for use as single-pole, single-throw attenuators or switches in electronic-warfare (EW), radar, and instrumentation applications. The 9721H types provide high-speed switching in octave or more frequency ranges between 1 and 18 gigahertz. The 9721 is an ultra broadband switching device which operates over a frequency range of 0.1 to 18 gigahertz in a single unit. Each combines broad frequency coverage, wide attenuation range, low insertion loss, and fast switching characteristics in a very compact, lightweight package.

FEATURES

- High speed switching
- Broadband coverage
- Low harmonic distortion for attenuator use
- Reciprocal operation
- Integral bias network
- DC blocks on r-f ports
- Wide attenuation range and low insertion loss
- Low drive current
- Hermetically sealed packaging
- Small size and light weight

GENERAL CHARACTERISTICS [1,2]

Frequency Range (GHz)	Minimum Attenuation Range[3] (dB)	Maximum Insertion Loss (dB)	Maximum VSWR	Type Number
High Speed 9721H Series				
1-2	0-45	1.0	1.7:1	VSL-9721HA45
2-4	0-50	1.2	2.0:1	VSS-9721HA50
4-8	0-60	1.7	2.2:1	VSC-9721HA60
8-12.4	0-60	2.3	2.5:1	VSX-9721HA60
8-18	0-60	2.7	2.5:1	VSU-9721HA60
Ultra Broadband 9721				
0.1-2.0	0-30	1.0	1.7:1	VSZ-9721S60
2-4	0-50	1.4	2.0:1	
4-8	0-60	1.8	2.0:1	
8-12	0-60	2.2	2.0:1	
12-18	0-60	2.7	2.5:1	

3579 3/77

Printed in U.S.A.

GENERAL CHARACTERISTICS [1]

Switching Speed, 10% to 90% points
- 9721H Models ..... 15 ns
- 9721 ..... 80 ns

RF Input Power, maximum
- CW ..... 500 mW
- Pulsed ..... 4 W

RF Port Impedance ..... 50 Ω

Bias Polarity ..... Negative

Bias Requirements
- 9721H Models
  - Insertion Loss State ..... -10 Vdc
  - Isolation State ..... +30 mAdc
- 9721
  - Insertion Loss State ..... 0 Vdc
  - Isolation State ..... -50 mAdc

Operating Temperature Range -54 to +71 °C

NOTES:

1. Characteristic values are based on performance tests. These figures may change without notice as a result of additional data or product refinement. Consult Varian before using this information for final equipment design.
2. These units can be furnished with hybrids for matched (absorptive) applications and also in a switch/driver configuration, see 9723.
3. With 0 dBm input, harmonic and intermodulation distortion is more than 40 dB down at any attenuation.

OUTLINE DRAWING

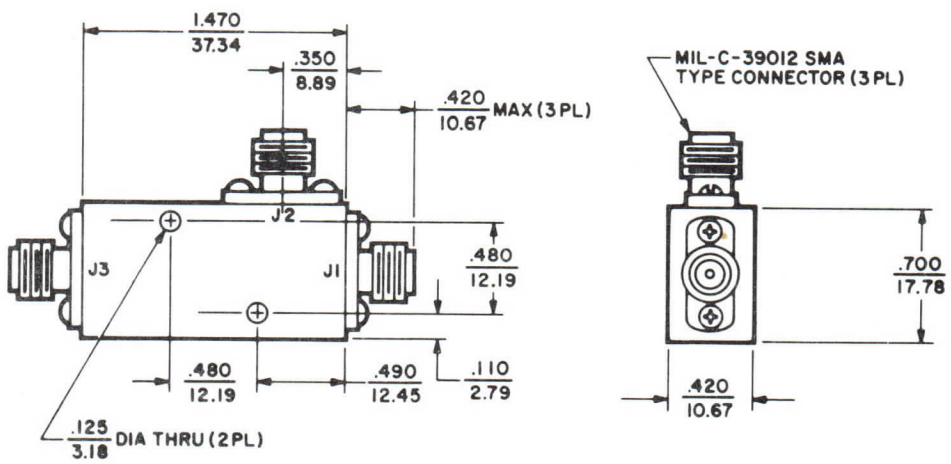

DIMENSIONS: ← inch / mm →

varian beverly

PRELIMINARY
TECHNICAL DATA

9721H
Series

SPST HIGH SPEED
SWITCH/ATTENUATOR

1-18 GHz

FEATURES

- High speed switching
- Broadband coverage
- DC blocks on RF ports
- Reciprocal device
- Low drive current

OUTLINE DRAWING

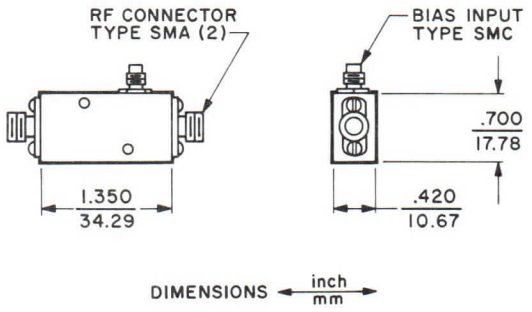

DESCRIPTION

Varian 9721H Series coaxial current-controlled PIN diode devices are for use as single-pole, single-throw high-speed switches or attenuators in electronic warfare, radar, and instrumentation applications. Models are available in octave or more frequency ranges from 1 to 18 gigahertz. Each combines broad frequency coverage, wide attenuation range, and fast switching characteristics in a very compact, lightweight package.

GENERAL CHARACTERISTICS[1]

PERFORMANCE

Frequency Range (GHz)	Minimum Attenuation Range[2] at 30 mA (dB)	Insertion Loss at -10 Vdc (dB)	VSWR at -10 Vdc	Type Number
1.0 - 2.1	0 - 45	1.0	1.7:1	VSL-9721HA45
2.0 - 4.0	0 - 50	1.2	2.0:1	VSS-9721HA50
4.0 - 8.0	0 - 60	1.7	2.2:1	VSC-9721HA60
8.0 - 12.4	0 - 60	2.3	2.5:1	VSX-9721HA60
8.0 - 18.0	0 - 60	2.7	2.5:1	VSU-9721HA60

ELECTRICAL

RF Port Impedance ..... 50 Ω
RF Input Power, maximum
CW ..... 500 mW
Pulsed ..... 4 W
Switching Speed, 10% to 90% points .... 15 ns

PHYSICAL

Dimensions ..... See Outline Drawing
Operating Temperature Range ... -54 to +95 °C

NOTES:

1. Characteristic values are based on performance tests. These values may change without notice as a result of additional data or product refinement. Consult Varian Beverly before using this information for final equipment design.
2. Harmonic and intermodulation distortion is more than 40 dB down at any attenuation with 0 dBm input.

3328 1/75

Printed in U.S.A.

varian beverly

PRELIMINARY
TECHNICAL DATA

VSZ-9721

SPST SWITCH/ATTENUATOR

0.1-18.0 GHz

DESCRIPTION

The VSZ-9721 is a lightweight, single-pole single-throw switch/attenuator unit for use in electronic-warfare (EW) and instrumentation systems where ultra broadband performance from 0.1 to 18.0 gigahertz is required. Low insertion loss and high isolation offer wide rf dynamic range control for broadband attenuator or switch application. Harmonic distortion is low with typical minority carrier lifetimes of 250 nanoseconds.

OUTLINE DRAWING

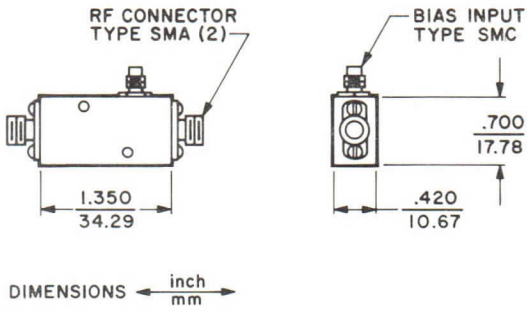

FEATURES

- Ultra broadband performance — 0.1 to 18 GHz
- Low insertion loss and high isolation
- Integral bias network
- Hermetically sealed
- Low harmonic distortion for attenuator use
- Small size and light weight

GENERAL CHARACTERISTICS[1,2]

Frequency Range (GHz)	Maximum Insertion Loss at 0 Bias (dB)	Minimum Isolation[3] at -100 mA (dB)	Maximum VSWR at 0 Bias
0.1-2.0	1.0	30	1.7:1
2-4	1.4	50	2.0:1
4-8	1.8	60	2.0:1
8-12	2.2	60	2.0:1
12-18	2.7	60	2.5:1

Switching Speed ..... 80 ns
Bias Polarity, off ..... Negative
Ambient Temperature Range ..... -54 to +71 °C

NOTES:

1. Characteristics are based upon performance tests. These values may change without notice as a result of additional data or product refinement. Consult Varian Beverly before using this information for final equipment design.
2. The unit is available with hybrids for matched (absorptive) applications and also with a switch/driver.
3. Units can be furnished at other isolation levels between 20 dB and 80 dB.

3300 12/74

Printed in U.S.A.

varian

PRELIMINARY
TECHNICAL DATA

9722
Series

STC ATTENUATOR
WITH LINEARIZER

FEATURES

- Absorptive
- Linear transfer characteristics
- Fast switching speed
- Matched input
- Low insertion loss

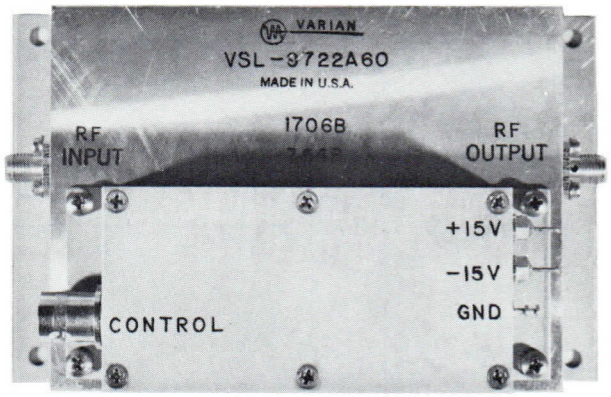

DESCRIPTION

Varian 9722 series attenuators are specially designed, solid state attenuators with integral linearizers for use in the STC* function of L-, S-, C-, and X-band radars. Each provides excellent linearity with low input VSWR for all attenuation levels within its operating frequency range.

*Sensitivity Time Control

GENERAL CHARACTERISTICS [1]

PERFORMANCE

Frequency Range (GHz)	Minimum Attenuation[2] (dB)	Insertion Loss		VSWR	Type Number
		Typical (dB)	Maximum (dB)		
1.25 - 1.45	60	0.8	1.0	1.7:1[3]	VSL-9722A60
2.7 - 3.1	60	1.0	1.2	1.5:1	VSS-9722A60
3.1 - 3.5	60	1.0	1.2	1.5:1	VSS-9722HA60
5.4 - 5.8	60	1.3	1.7	1.5:1	VSC-9722A60
8.5 - 9.6	60	1.8	2.0	1.7:1	VSX-9722A60

ELECTRICAL

RF Input, CW, max ..... 1 W
Bias Current, max
at +15 Vdc ..... 150 mAdc
at -15 Vdc ..... 150 mAdc
Transfer Characteristic ..... 10 dB/V
Control Voltage ..... 0 to 6 V
Switching Speed, max ..... 100 ns

PHYSICAL

Dimensions ..... See Outline Drawing
Weight ..... 10 oz/283 g
Operating Temperature Range ..... 0 to 60 °C
RF Connectors ..... Type SMA
Control Connector ..... Type BNC

NOTES:

1. Characteristic values are based on performance tests. These figures may change without notice as a result of additional data or product refinement. Consult the Varian Beverly Division before using this information for final equipment design.
2. Attenuation can be calculated as follows:

$$\text{Attenuation in dB} = \alpha V_C + I_L \pm 0.5$$

where

α = Attenuation constant (10 ± 0.7)
V_C = Control voltage in volts
I_L = Insertion loss in dB

This applies for any frequency, temperature or RF power level (to 100 mW) within the specified operating range.
3. For 100 MHz coverage, VSWR can be 1.5:1.

3580 3/77

Printed in U.S.A.

OUTLINE DRAWING

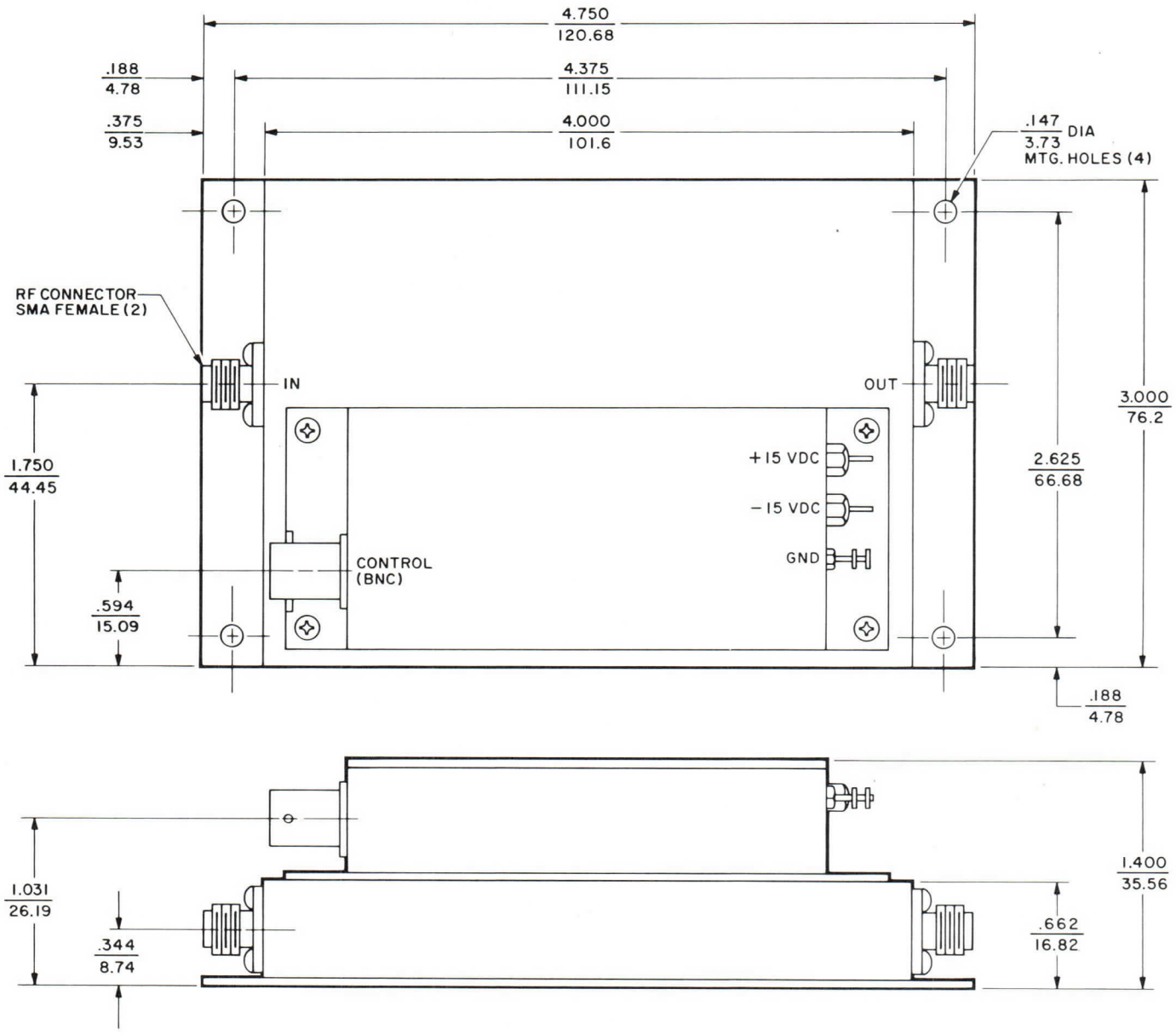

DIMENSIONS: ← inch / mm →

varian

TECHNICAL DATA

9723 Series SPST SWITCH WITH DRIVER 1-18 GHz

DESCRIPTION

9723 series switches are single-pole, single-throw electronic switches utilizing Varian PIN diode modules and Varian IC drivers that are TTL compatible. Models can be delivered with octave or multioctave bandwidth capabilities between 1 and 18 gigahertz. These switches are ideal for applications in EW systems requiring ultra-fast switching, small size, and high reliability.

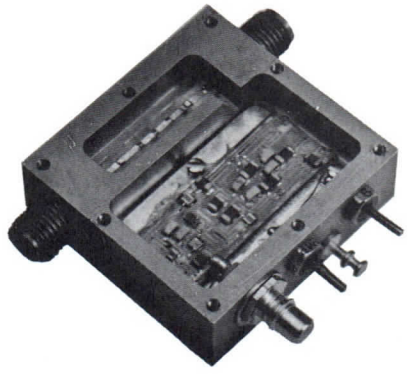

FEATURES

- Fast Switching Speed
- Low Insertion Loss
- TTL Compatible
- Integral Bias Circuit, DC Block and Driver
- Common Mode Noise Rejection (Optional)
- Circuit for DC Testing of Switch (Optional)
- IC Driver

GENERAL CHARACTERISTICS[1]

Frequency Range (GHz)	Minimum Isolation[2] (dB)	Maximum Insertion Loss (dB)	Maximum VSWR	Type Number
1-2	40	0.8	1.5:1	VSL-9723S40
1-2	50	1.0	1.5:1	VSL-9723S50
2-4	40	1.2	1.7:1	VSS-9723S40
2-4	60	1.4	1.7:1	VSS-9723S60
4-8	40	1.6	1.7:1	VSC-9723S40
4-8	60	1.8	1.7:1	VSC-9723S60
8-12	40	2.0	2.0:1	VSX-9723S40
8-12	60	2.2	2.0:1	VSX-9723S60
8-18	40	2.3	2.2:1	VSZ-9723S40
8-18	60	2.5	2.2:1	VSZ-9723S60
12-18	40	2.3	2.0:1	VSU-9723S40
12-18	60	2.5	2.0:1	VSU-9723S60

Bias Current, maximum
- at 12 Vdc ..... 100 mAdc
- at -12 Vdc ..... 30 mAdc

Connectors ..... See Outline Drawing

Switching Speed
- On-Off[3] ..... 15 ns
- Off-On[4] ..... 15 ns

Operating Temperature Range .... -54 to 95 °C

Operating Power Level ..... 1 W

3581 7/76

Printed in U.S.A.

NOTES:

1. Characteristics and operating values are based on performance tests. These figures may change without notice as a result of additional data or product refinement. The Varian Beverly Division should be consulted before using this information for final equipment design.
2. Units can be furnished at other isolation levels between 20 dB and 80 dB.
3. Measured from 50 percent point of TTL input to 30-dB isolation.
4. Measured from 50 percent point of TTL input to within 1 dB of insertion loss.

SWITCHING SPEED

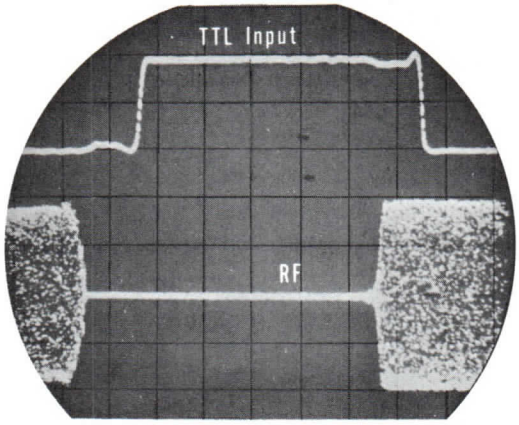

10 ns/division

BLOCK DIAGRAM

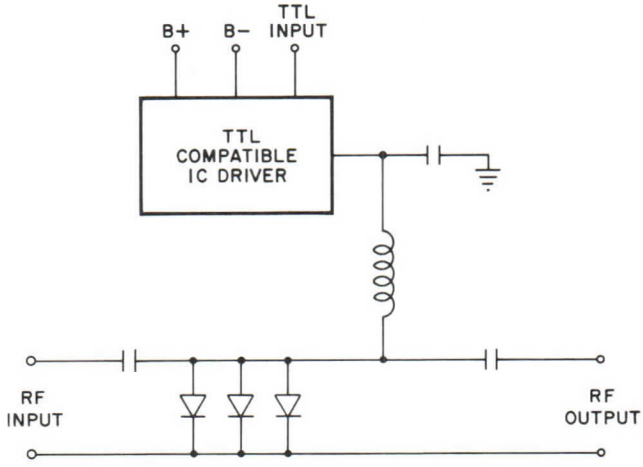

SPST SWITCH WITH INTEGRAL DRIVER

OUTLINE DRAWING

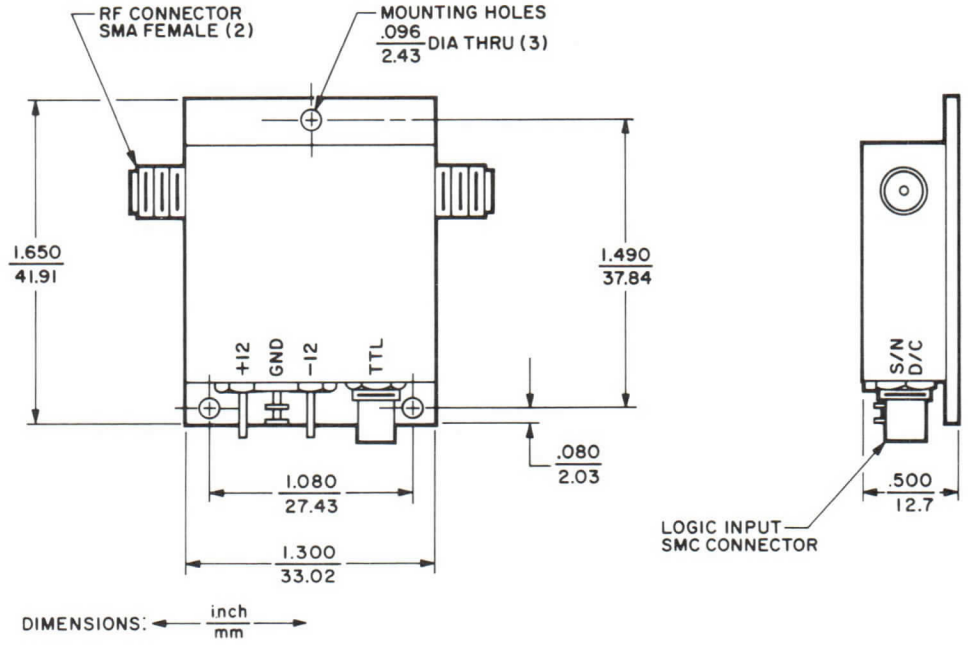

varian

TECHNICAL DATA

9724
Series

SOLID STATE BROADBAND COAXIAL LIMITERS

1-18 GHz

FEATURES

- Low limiting level
- Octave coverage
- Up to 1 kW peak input power
- High average power rating
- Fast recovery time
- Small size

DESCRIPTION

Varian 9724 broadband coaxial limiters provide octave or waveguide band coverage between 1 and 18 gigahertz with low limiting level and high average power handling capability. Fast recovery time at high peak power input make these limiters ideal for use in EW or radar systems. Varian limiting diodes are used to assure reliable performance and to provide capability of limiter modification to meet special system requirements.

GENERAL CHARACTERISTICS [1]

ELECTRICAL

Frequency Range (GHz)	Peak Power (W)	Average Power (W)	Insertion Loss (dB)	Maximum Pulse Width [2] (μs)	Flat Leakage [3] (mW)	Spike Leakage (erg/W)	Recovery Time (μs)	VSWR	Type Number
1-2	500	2	1.5	5	100	0.5/1	2	1.6:1	VSL-9724L
2-4	1000	2	1.6	5	100	0.5/1	2	1.6:1	VSS-9724L
4-8	500	1.0	2.0	1	100	0.5/1	0.2	1.7:1	VSC-9724L
8.0-12.4	250	1.0	2.5	1	100	0.5/0.25	0.2	1.9:1	VSX-9724L
12.4-18.0	100	0.5	3.0	1	30	0.5/0.25	0.2	2.2:1	VSU-9724L

PHYSICAL

Dimensions ..... See Outline Drawings

Weight

VSL-9724L , VSS-9724L ..... 2 oz/56 g

VSC-9724L , VSX-9724L , VSU-9724L ..... 1 oz/28 g

RF Connectors ..... See Outline Drawings

Operating Temperature Range ... -30 to +70 °C

NOTES:

1. Characteristic values are based on performance tests. These values may change without notice as a result of additional data or product refinement. Consult Varian Beverly Division before using this information for final equipment design.
2. L-band and S-band models can be furnished with pulse width capabilities of 70 μs and 40 μs, respectively, on special order.
3. Versions with a maximum flat leakage of 10 mW are available on special request.

3582 3/77

Printed in U.S.A.

OUTLINE DRAWINGS

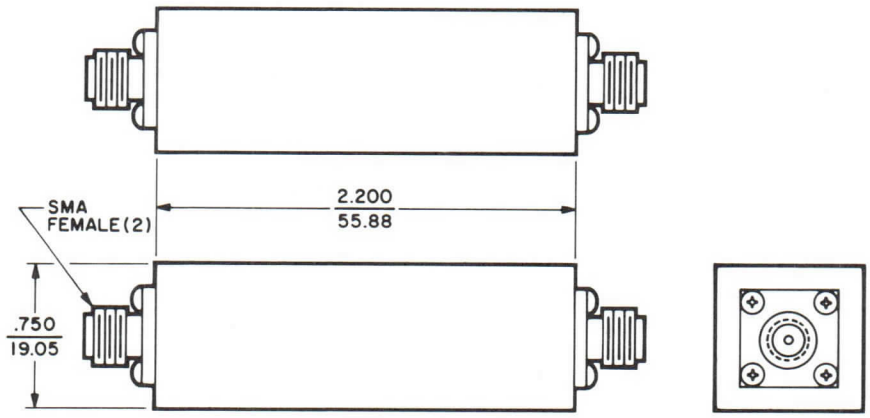

VSL-9724L, VSS-9724L

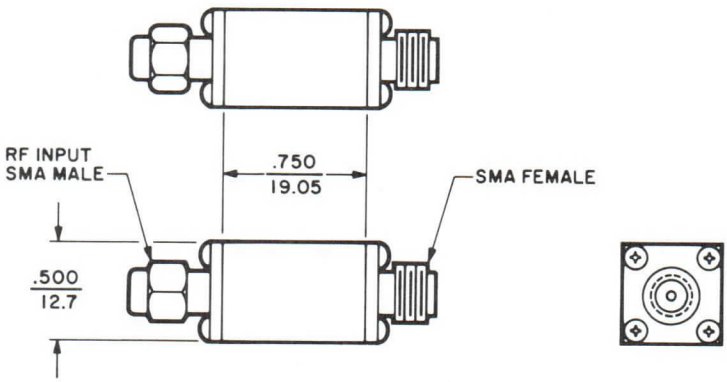

VSC-9724L, VSX-9724L, VSU-9724L

DIMENSIONS: ← inch / mm →

varian

PRELIMINARY
TECHNICAL DATA

9726
Series
SPDT SWITCH
WITH DRIVER
1-18 GHz

FEATURES

- Fast switching speed
- Low insertion loss
- TTL compatible
- Built-in bias circuit, dc block and driver
- Integral IC driver circuit

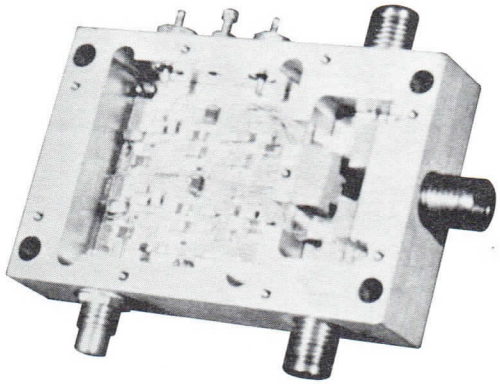

DESCRIPTION

The 9726 series of SPDT switches with drivers utilizes Varian broadband PIN diode modules and IC switch drivers. The IC drivers are TTL-compatible. These units are ideal for use in EW systems requiring fast switching, small compact size, and high reliability.

GENERAL CHARACTERISTICS[1]

PERFORMANCE

Frequency Range (GHz)	Minimum Isolation (dB)	Maximum Insertion Loss (dB)	Maximum VSWR	Type Number
1-2	40	1.2	1.5:1	VSL-9726S40
1-2	60	1.3	1.5:1	VSL-9726S60
2-4	40	1.4	1.7:1	VSS -9726S40
2-4	60	1.5	1.7:1	VSS -9726S60
4-8	37	1.6	1.8:1	VSC-9726S37
4-8	55	1.7	1.8:1	VSC-9726S55
8-12.4	35	2.1	2.0:1	VSX-9726S35
8-12.4	50	2.2	2.0:1	VSX-9726S50
8-18	35	2.8	2.0:1	VSZ-9726S35
8-18	50	2.9	2.0:1	VSZ-9726S50
12.4-18	35	2.5	2.0:1	VSU-9726S35
12.4-18	50	2.7	2.0:1	VSU-9726S50

ELECTRICAL

Switching Speed
- On-Off[2] ..... 30 ns
- Off-On[3] ..... 50 ns

Bias Requirements, single TTL[4]
- +12 Vdc ..... 100 mA
- -12 Vdc ..... 100 mA

PHYSICAL

Dimensions ..... See Outline Drawing
Weight ..... 4 oz/113.6 g
Connectors ..... See Outline Drawing
Operating Temperature Range ... -54 to +95 °C

3583 5/77

Printed in U.S.A.

NOTES:

1. Characteristic values are based on performance tests. These values may change without notice as a result of additional data or product refinement. Consult Varian before using this information for final equipment design.
2. Measured between the 50% point of TTL input to 30 dB isolation.
3. Measured between the 50% points of TTL input to within 1 dB of insertion loss.
4. Dual TTL is available as an option.

OUTLINE DRAWING

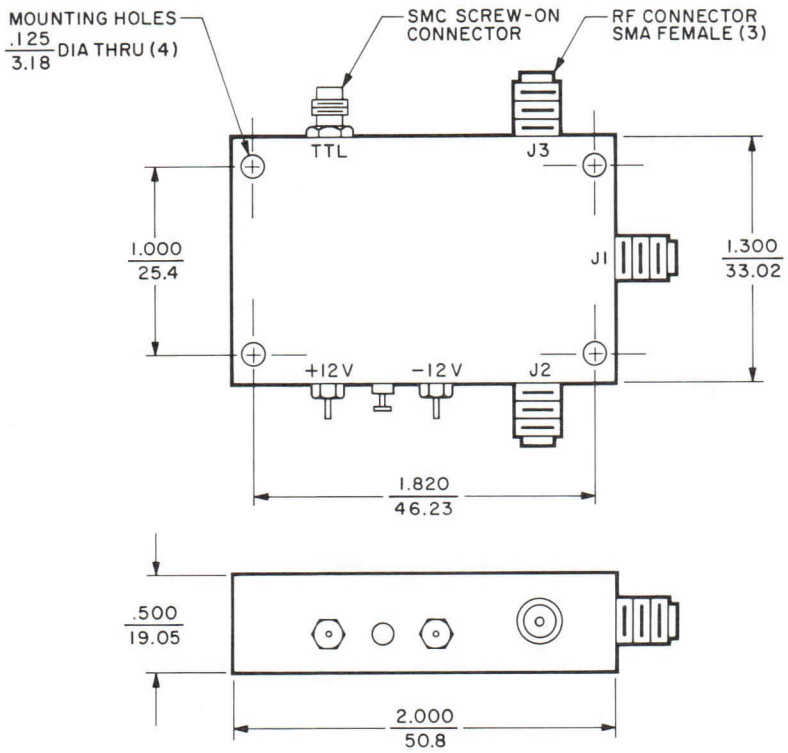

DIMENSIONS: ← inch / mm →

varian

PRELIMINARY
TECHNICAL DATA

9729
Series

VOLTAGE
VARIABLE ATTENUATORS
1-18 GHz

DESCRIPTION

Varian 9729 voltage variable attenuators are ideally suited for use as linear attenuators in electronic warfare and radar applications. These devices utilize Varian PIN diodes and linearizing circuits for octave or waveguide frequency band coverage at low drive current levels. Each preserves low VSWR characteristics over the entire attenuation range with matched 50 ohm input impedance. All units are very compact and light weight.

FEATURES

- Small size
- Octave or waveguide coverage — 1 to 18 GHz
- Low VSWR over full attenuation range
- Linear control voltage versus attenuation
- Fast modulation response

GENERAL CHARACTERISTICS[1]

Frequency Range (GHz)	Attenuation (dB)	Insertion Loss (dB)	VSWR	Type Number
1-2	40	1.8	2.0:1	VSL-9729A40
1-2	60	2.0	2.0:1	VSL-9729A60
2-4	40	2.1	2.0:1	VSS -9729A40
2-4	60	2.2	2.0:1	VSS -9729A60
4-8	40	2.3	2.2:1	VSC-9729A40
4-8	60	2.5	2.2:1	VSC-9729A60
8.0-12.4	40	3.0	2.2:1	VSX-9729A40
8.0-12.4	60	3.2	2.2:1	VSX-9729A60
12.4-18.0	40	3.3	2.5:1	VSU-9729A40
12.4-18.0	60	3.5	2.5:1	VSU-9729A60

ELECTRICAL

Linearity, at one frequency in the band
  Greater value of ±1.0 dB or ±7% of attenuation
Control Voltage, at 10 mA max ... 0 to 6 V
Bias Requirements
  Voltage ..... ±15 Vdc
  Current ..... 100 mAdc
RF Input Power
  Peak ..... 4 W
  Average ..... 0.5 W
Modulation Response Time ..... 100 ns
Attenuation Flatness vs. Frequency
  Greater value of ±1.0 dB or ±7% of attenuation
Attenuation Change with Temperature,
  -30° C to +70° C, max ..... ±10 %

PHYSICAL

Dimensions ..... See Outline Drawing
Weight, approx ..... 9 oz/255 g
Connectors
  RF Ports ..... Type SMA
  Bias Ports ..... Type SMC
Temperature Range
  Operating ..... -30 to +70 °C
  Non-operating ..... -54 to +85 °C

3584 3/77

Printed in U.S.A.

NOTE:

1. Characteristic values are based on performance tests. These figures may change without notice as a result of additional data or product refinement. Consult the Varian Beverly Division before using this information for final equipment design.

OUTLINE DRAWING

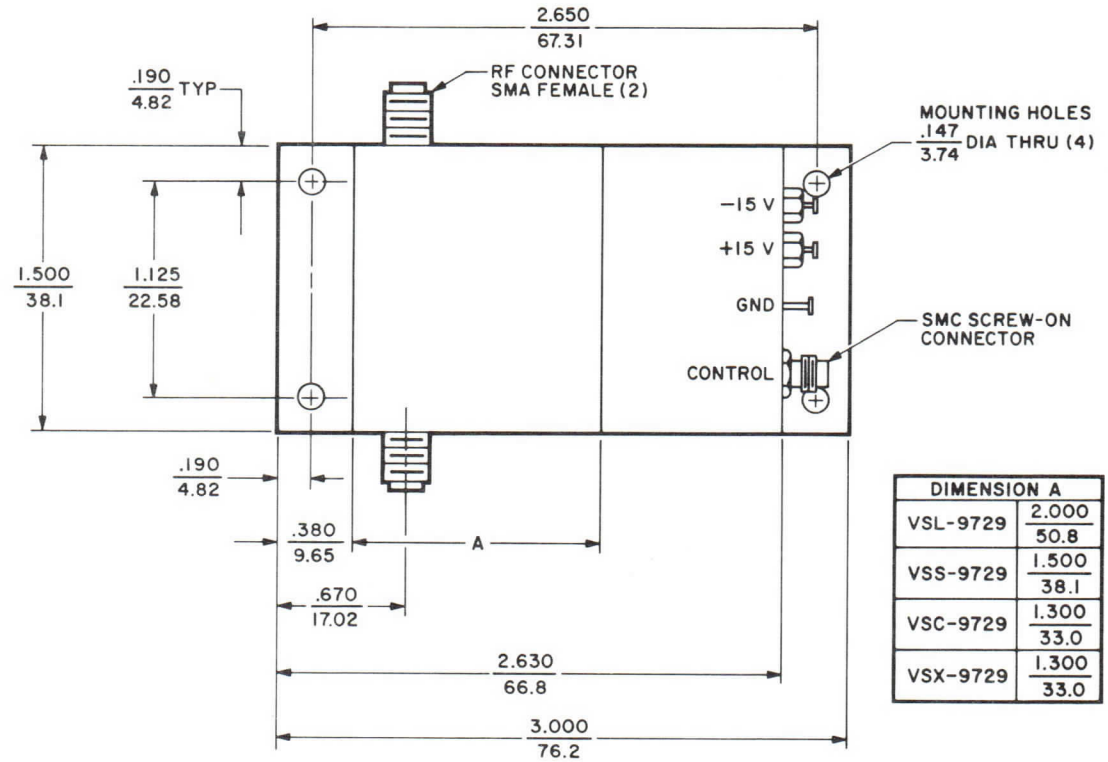

DIMENSION A	
VSL-9729	2.000 / 50.8
VSS-9729	1.500 / 38.1
VSC-9729	1.300 / 33.0
VSX-9729	1.300 / 33.0

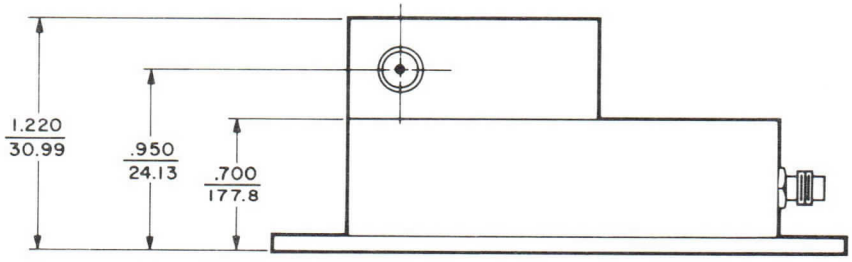

DIMENSIONS: ← inch / mm →

varian

PRELIMINARY
TECHNICAL DATA

9730
Series

SP4T SWITCH

1-18 GHz

FEATURES

- Small size
- Fast switching
- High isolation
- Low insertion loss
- TTL compatible
- MIL-STD-202E construction

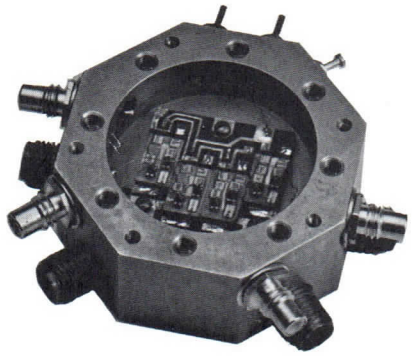

DESCRIPTION

Varian 9730 series switches are small, SP4T r-f switches for use in electronic-warfare (EW), radar, and instrumentation applications at frequencies from 1 to 18 gigahertz. These switches are TTL compatible and employ IC construction to achieve fast switching speeds in small packages. By using series-shunt diodes, isolation values range between 20 dB and 70 dB with low insertion loss. The rugged construction of the switches is in accordance with MIL-STD-202E.

GENERAL CHARACTERISTICS

Frequency Range (GHz)	Isolation (dB)	Insertion Loss (dB)	VSWR	Type Number
1-2	45	1.5	1.6:1	VSL-9730S45
1-2	60	1.7	1.6:1	VSL-9730S60
2-4	40	1.5	1.7:1	VSS-9730S40
2-4	60	1.8	1.8:1	VSS-9730S60
4-8	40	2.0	1.8:1	VSC-9730S40
4-8	55	2.2	1.9:1	VSC-9730S55
8.0-12.4	37	2.5	1.9:1	VSX-9730S37
8.0-12.4	50	2.7	2.0:1	VSX-9730S50
12.4-18.0	37	3.0	1.9:1	VSU-9730S37
12.4-18.0	50	3.2	2.2:1	VSU-9730S50

3585 8/76

Printed in U.S.A.

GENERAL CHARACTERISTICS

ELECTRICAL

RF Power Input, max	30 dBm
Loss Track, from port-to-port	0.3 dB
Bias Voltage	
At 50 mAdc	-15 ± 1.5 Vdc
At 150 mAdc	+5 ± 0.5 Vdc
Switching Speed	
Rise Time (10% to 90% RF)	100 ns
Fall Time (90% to 10% RF)	500 ns

PHYSICAL

Dimensions	See Outline Drawing
Weight, approx	6 oz/170 g
Connectors	See Outline Drawing
Temperature Range	
Operating	-30 to 70 °C
Non-operating	-40 to 85 °C

LOGIC TRUTH TABLE

TTL Logic State	Condition At Logic Input	RF Loss
		Normal Logic(N)
0	0 - 0.7 V 2 mA max, sink	Low Loss
1	2.1 - 5.0 V 40 μA max, source	High Loss

NOTE:

Characteristic values are based on performance tests. These values may change without notice as a result of additional information or product refinement. Consult Varian before using this information for final equipment design.

OUTLINE DRAWING

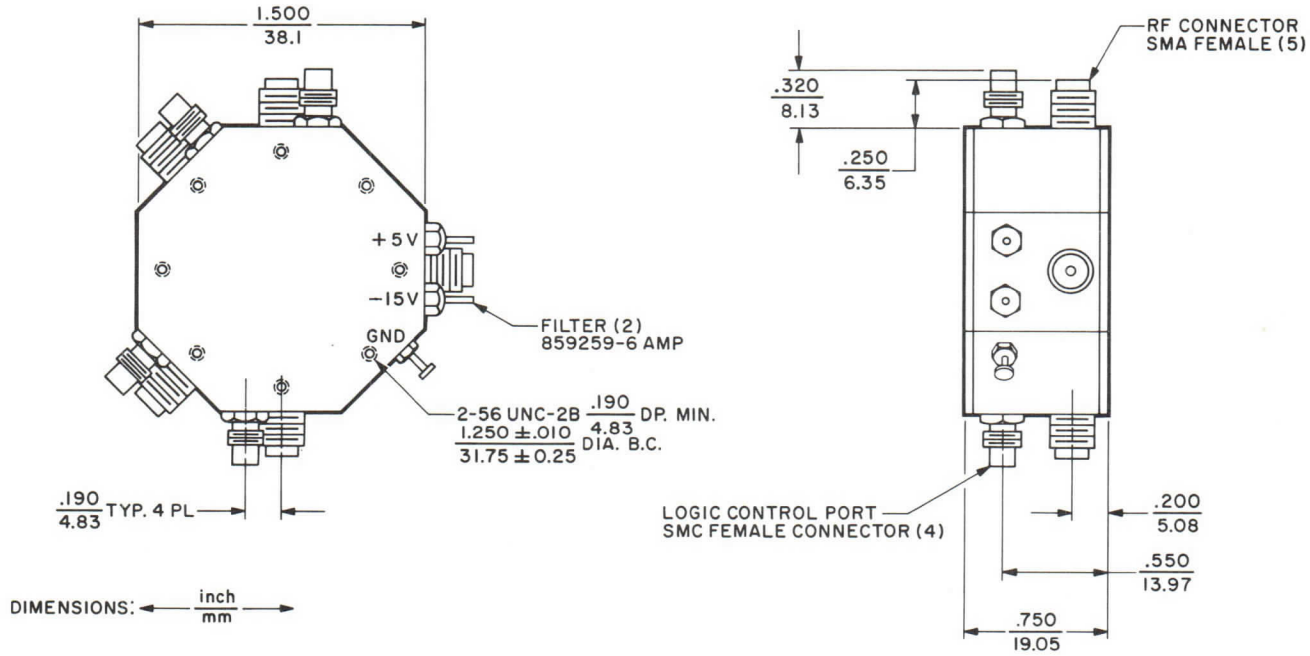

varian
solid state division

TECHNICAL DATA

VSZ-9900
Series

MICROWAVE
PULSE HEIGHT DETECTORS

DESCRIPTION

The VSZ-9900 microwave pulse-height detector is a device for making precise measurements of short-duration pulses. Fast risetime pulses with narrow widths are detected and register a corresponding output pulse one microsecond long. The output is used to drive an internal counter or external registering device depending on the model selected. It is particularly useful in determining peak leakage power in TR tubes, detecting missing pulses in magnetrons, and making peak power measurements of pulsed transmitters. Operating in conjunction with a tuned crystal detector and precision attenuator, this device can be triggered by extremely low power. For additional technical information, refer to Application Engineering Bulletin, AEB-100.

The Pulse Height Detector is constructed of solid state modules providing reliable performance and ease of maintenance. The VSZ-9900 series is comprised of two models which offer a choice of package options.

GENERAL CHARACTERISTICS [1]

ELECTRICAL

Input Voltage,
- VSZ-9900A and VSZ-9900B ..... 115 Vac

Input Sensitivity and Pulse Handling Capability
- Peak Input, absolute maximum ... 2 V
- Input Triggering Voltage,
  - Z_{in} = 50 Ω, nominal[2] ..... +30 mVdc
- Rise Time, typical[3] ..... 500 ps
- Pulse Width[4]
  - Minimum ..... 500 ps
  - Maximum ..... 40 μs
- Pulse Recurrence Rate .. Up to 20,000 pps

Output, pulse delayed ≈ 60 μs from input
- VSZ-9900A, Z_o = 50 Ω .... Into open circuit
  - Pulse Polarity ..... Positive or Negative
  - Pulse Amplitude, peak ..... 1 Vdc
  - Pulse Width[5], nominal ..... 1 μs
- VSZ-9900B[6] ..... Digital Readout

PHYSICAL

Dimensions ..... See Outline Drawings

Weight
- VSZ-9900A ..... 3.5 lbs
- VSZ-9900B ..... 6 lbs

ENVIRONMENTAL

Operating Temperature[2] ..... 0 to 50 °C

PACKAGE OPTIONS

Type Number	Description
VSZ-9900A	Detector with power supply
VSZ-9900B	Detector with power supply and digital frequency or pulse counter

NOTES:

1. Characteristic values are based on performance tests. These figures may change without notice as the result of additional data or product refinement. Contact the Varian Solid State Microwave Operation before using this information for equipment design.
2. Triggering threshold may vary ± 20% during warm-up. This corresponds to a ± 1.0 dB change in r-f power or a 10°C temperature change.
3. Information on Pulse Height Detectors having faster risetime is available on request.
4. Measured at 90% of pulse amplitude.
5. Measured at 10% of pulse amplitude.
6. The pulse recurrence rate of periodic pulse trains can be read directly in frequency on the built-in frequency counter. Also, the total number of pulses that exceed a preset threshold can be displayed on the counter, up to 99,999 pulses.

2597 4/71

Printed in U.S.A.

TEST MEASUREMENTS

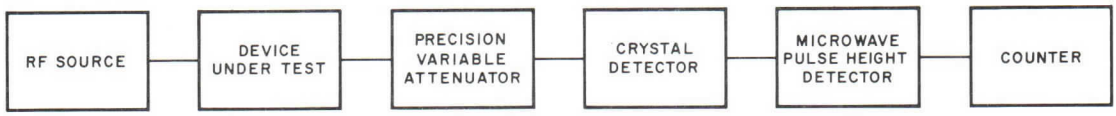

The test arrangement for making transient measurements using the Microwave Pulse Height Detector requires an r-f source, the device to be tested, a precision attenuator, and a crystal detector, the output of which is fed into the MPHD as shown in the block diagram.

The output of the MPHD is connected to an external recording device or to the internal digital readout counter depending on the model used. For customer convenience, the crystal detector is optional but a simple calibration technique can adapt most positive output detectors for use with the MPHD.

OUTLINE DRAWINGS

VSZ-9900A

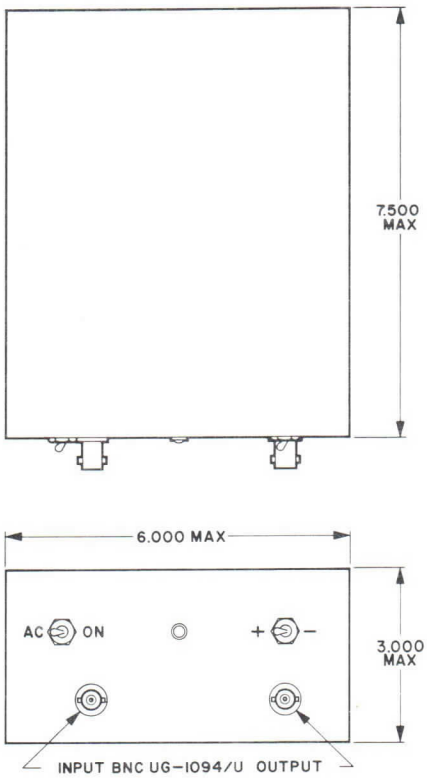

DIMENSIONS ARE IN INCHES.

VSZ-9900B

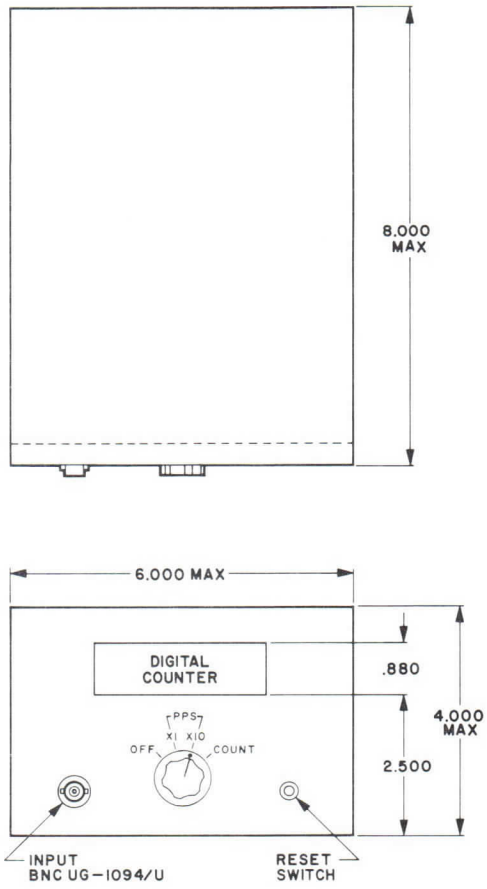

varian

PRELIMINARY
TECHNICAL DATA

VAS-10, VAS-20
VAS-30, VAS-40
VAS-50, VAS-60
Series

STEP RECOVERY DIODES

DESCRIPTION

Varian VAS series of step recovery diodes are special silicon varactors diodes for use in high-order multiplication, pulse-sharpening, pulse amplifying, and time-delay networks. These varactors feature controlled stored charge and optimized step-recovery characteristics. By careful processing, series resistance, series inductance, and parallel capacitance are kept extremely low. Only experience-proven THERMOBOND® brazing and welding techniques are used throughout to a ssure maximum reliability.

PERFORMANCE CHARACTERISTICS [1]

Minimum Reverse Breakdown Voltage at -10 μAdc (V)	Minimum Minority Carrier Lifetime (ns)	Typical Minority Carrier Lifetime (ns)	Maximum Transition Time [2] (ps)	Typical Transition Time [2] (ps)	Type Number [3]
10	5	7.0	100	30	VAS-11
10	5	7.0	200	150	VAS-12
20	7	8.5	100	50	VAS-21
20	7	8.5	200	150	VAS-22
30	8	11.0	100	70	VAS-31
30	8	11.0	200	150	VAS-32
40	12	16.0	120	90	VAS-41
40	12	16.0	200	150	VAS-42
40	12	16.0	300	250	VAS-43
50	15	----	200	150	VAS-52
50	15	----	300	250	VAS-53
60	----	50.0	300	250	VAS-63

ENVIRONMENTAL

Temperature Range, max

Operating ..... -65 to +175 °C

Storage ..... -65 to +200 °C

NOTES:

1. Characteristic values are based on performance tests. These figures may change without notice as a result of additional data or product refinement. Consult the Varian Beverly Division before using this information for final equipment design.

2. Transition time is measured between 20 and 80% points on the voltage recovery trace. These values are guaranteed for A (0.26 to 0.42 pF) and B (0.42 to 0.58 pF) capacitance ranges only. Values for C and D ranges will be slightly higher.

3. When ordering, add suffix to denote junction capacitance measured at 6 V bias and 1 MHz. Capacitance ranges are A (0.26-0.42 pF), B (0.42-0.58 pF), C (0.58-1.60 pF), and D (1.60 pF and up). Example: VAS-11AN10

3652 3/77

Printed in U.S.A.

CHARACTERISTIC CURVES
Typical performance values

IMPEDANCE CHARACTERISTICS

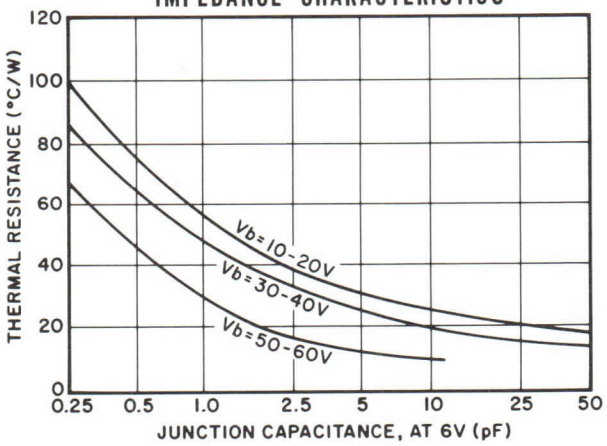

MEASUREMENT TECHNIQUES

MINORITY CARRIER LIFETIME TEST CIRCUIT

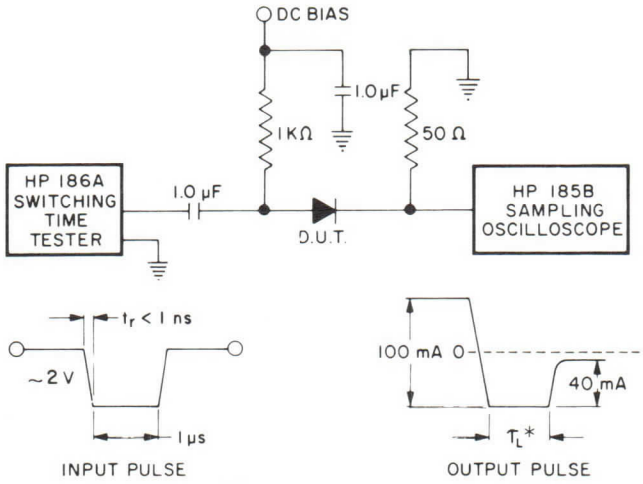

* Minority carrier lifetime, τ_L, is measured directly at the test output using the above circuit.

TRANSITION TIME TEST CIRCUIT

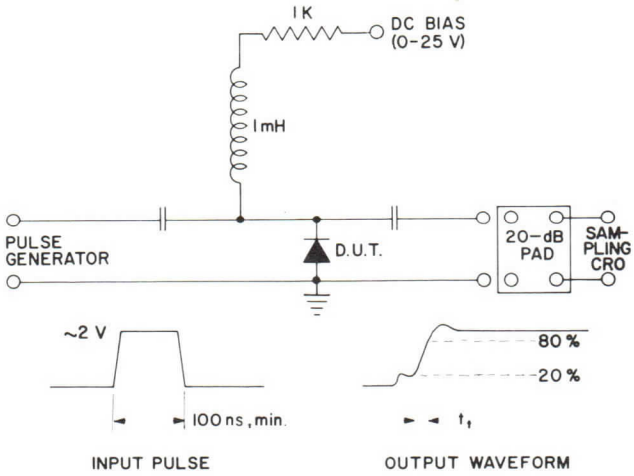

The initial blip on the output waveform trace represents the beginning of the recovery cycle. The steep ramp represents transition.

OUTLINE DRAWINGS
CASE STYLES

N10

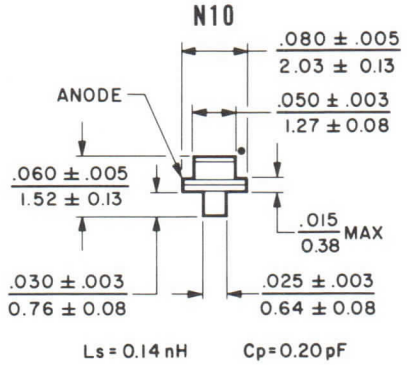

Ls = 0.14 nH Cp = 0.20 pF

N16

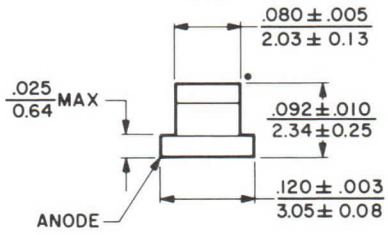

Ls = 0.50 nH Cp = 0.14 pF

N18

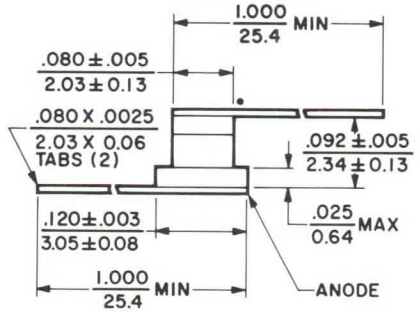

Ls = 0.50 nH Cp = 0.14 pF

ALSO AVAILABLE WITH SINGLE TAB OR DOUBLE TABS IN H OR U CONFIGURATION

N20

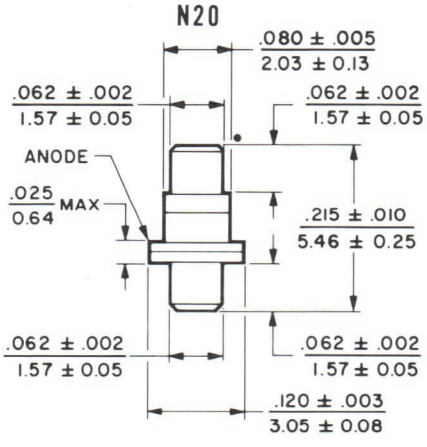

Ls = 0.50 nH Cp = 0.14 pF

•HEAT SINK END

DIMENSIONS: ← inch / mm →

SOLID STATE DIODES

varian beverly

PRELIMINARY
TECHNICAL DATA

GALLIUM ARSENIDE PARAMP DIODES

DESCRIPTION

Varian 400-gigahertz diodes are microwave gallium-arsenide varactor diodes which provide extraordinary gain bandwidth performance with exceptionally-low noise figure at frequencies from UHF through Ku bands. These diodes meet the most demanding mechanical and environmental requirements; their ultimate stress tolerances far exceed any conceivable equipment need.

All contacts are bonded or brazed and the final package is hermetically sealed. The wide choice of package style, series inductance, and case capacitance permits the paramp designer to optimize his design quickly. Extremely rigid production controls yield diodes having uniform dynamic performance characteristics.

GENERAL CHARACTERISTICS

Reverse Breakdown Voltage, min..... 6.0 Vdc
Power Dissipation, max ..... 250 mW
Operating Temperature..... +20 °K to +175 °C
Storage Temperature..... +20 °K to +200 °C

When ordering, specify the case style desired by adding the suffix N10, N15, N19, or N20. Example: VAP-101N15. Other case styles can be supplied upon request.

Junction Capacitance[2] at 0 V (pF)	Cutoff Frequency[3] at -6 V (GHz)	Type Number
0.4-0.9	300-400	VAP-101
0.5-0.7	400-500	VAP-102
0.3-0.5	300-400	VAP-103
0.3-0.5	400-500	VAP-104

OUTLINE DRAWINGS

Case N10

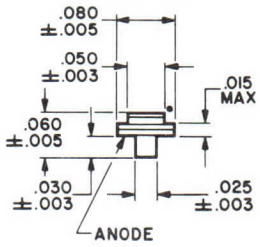

Case N15

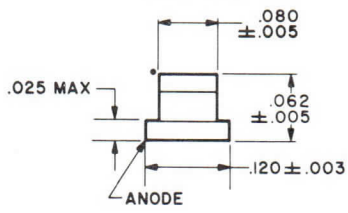

Case N19

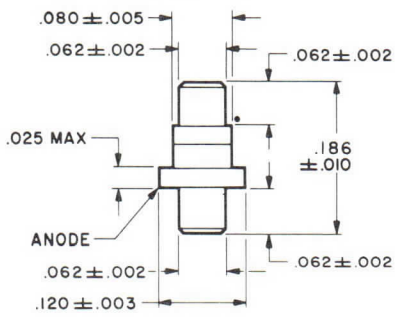

Case N20

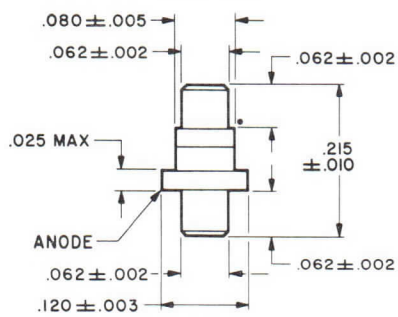

DIMENSIONS ARE IN INCHES

•HEAT SINK END

2212 10/69

Printed in U.S.A.

PACKAGE PARASITICS

All microwave packages possess a parallel capacitance and a series inductance. Package capacitance values are given for the empty case and do not include internal fringing capacitance (amounting to 0.01 to 0.02 pF). Values are obtained by substitution of a package for an air gap, the length of which corresponds to the package height (excluding prongs). Inductance is measured at 1 GHz in a 50 ohm coaxial cavity whose inner conductor is 120 mils in diameter.

Parallel case capacitance is controlled to within 0.01 pF by preselection and sorting of empty cases. Inductance can be selected to within ±10% of the values shown by variation in the internal contact structure. This selection ability and resultant control are of particular advantage when the end use involves fixed tuned circuitry.

Package Style	Parallel Capacitance[4] (pF)	Typical Series Inductance (nH)
N10	0.17-0.20	0.11
N15, N19	0.20-0.27	0.3
N20	0.12-0.16	0.4

NOTES:

1. Characteristic values are based on performance tests. These figures may change without notice as the result of additional data or product refinement. Contact the Varian Solid State Division, Beverly, Massachusetts before using this information for equipment design.
2. Measured at 0 V using a 1-MHz capacitance bridge. Junction capacitance can be controlled within ±10 % at no increase in cost. Value does not include case capacitance.
3. Measured between 2 mA and -6 V at 10 GHz using a Smith Impedance Plot Method.
4. Can be controlled to within ±0.01 pF of any specified value within the range for a particular package style.

Typical Smith Chart Plot

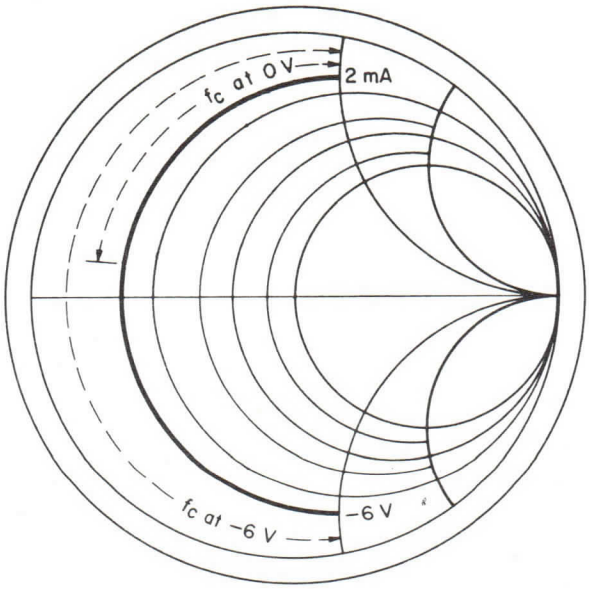

varian

TECHNICAL DATA

MICROWAVE GUNN EFFECT DIODES

5-60 GHz

FEATURES

- LOW FM AND AM NOISE
- LOW VOLTAGE OPERATION
- OPERATION TO 60 GHz
- HIGH RELIABILITY

DESCRIPTION

Varian Gunn-effect diodes are gallium-arsenide devices for converting low-voltage d-c power directly to microwave frequency power. They provide from 10 to 500 milliwatts at frequencies between 5 and 60 gigahertz. Easily incorporated in any microwave resonant structure, whether it is waveguide, coaxial, stripline, or microstrip, these diodes produce reliable low-noise power for a wide variety of microwave-oscillator applications. Some of the many uses for Gunn-diode oscillators are: local oscillators for radar, fuses, and communication microwave intrusion alarms; automobile anti-skid braking systems and anti-collision radars; YIG oscillators for sweepers and EW systems; parametric amplifier pumping; and transmitter oscillators for communications, radars, and beacons.

Before a wafer is used to make production diodes, it is subjected to extensive evaluation. Sample diodes are assembled from each wafer and r-f and d-c parameters of each diode are measured and recorded.

To assure proper diode operation under cold and hot temperature conditions, d-c current is monitored while each diode, with d-c bias applied, is subjected to 3 temperature cycles, from liquid-nitrogen temperature to that of boiling water. After temperature cycling, all diodes are thoroughly leak tested. Then each sample diode is burned-in at rated d-c voltage and current for 72 hours at a heat-sink temperature of +71°C.

All production diodes are subjected to a 72-hour burn-in at a heat sink temperature of 45°C with full rated current and an operating voltage 10% above the rated value. They are tested for r-f power output at a customer-specified frequency. During test, threshold currents and operating currents and voltages are monitored. Each diode receives one temperature cycle from -195°C to +100°C while operating at rated bias.

GENERAL CHARACTERISTICS [1]

PHYSICAL

Dimensions ..... See Outline Drawings
Cooling ..... Conduction

ENVIRONMENTAL

Storage Temperature ..... -54 to +125 °C
Heat Sink Temperature ..... -54 to +71 °C
Vibration ..... 20 G

ELECTRICAL

Wide-band Gunn Diodes

FREQUENCY COVERAGE (GHz)	MINIMUM OUTPUT POWER [2] (mW)	MAXIMUM BIAS VOLTAGE [3] (Vdc)	BIAS CURRENT (mAdc)				STANDARD CASE STYLE [4]	TYPE NUMBER [5]
			Operating		Threshold			
			Typ	Max	Typ	Max		
8.0 - 12.4	10	12	550	700	700	900	N34, N103, N111	VSX-9217S1
8.0 - 12.4	20	12	650	850	850	1000	N34, N103, N111	VSX-9217S2
12.4 - 18.0	10	10	650	850	850	1000	N34, N103, N111	VSU-9218S1
12.4 - 18.0	20	10	750	900	950	1100	N34, N103, N111	VSU-9218S2

2657 2/76

Printed in U.S.A.

GENERAL CHARACTERISTICS (Cont.)[1]

ELECTRICAL

Narrow-band Gunn Diodes

FREQUENCY COVERAGE (GHz)	MINIMUM OUTPUT POWER[6] (mW)	MAXIMUM BIAS VOLTAGE[3] (Vdc)	BIAS CURRENT (mAdc)				STANDARD CASE STYLE[4]	TYPE NUMBER[5]
			Operating		Threshold			
			Typ	Max	Typ	Max		
5.0 - 8.0	10	18	200	300	350	500	N23, N33	VSX-9209S1
5.0 - 8.0	10	18	350	500	500	700	N23, N33	VSC-9209S1A
5.0 - 8.0	25	18	300	400	450	600	N23, N33	VSC-9209S2
5.0 - 8.0	25	18	350	500	500	700	N23, N33	VSC-9209S2A
5.0 - 8.0	50	18	350	500	500	700	N23, N33	VSC-9209S3
5.0 - 8.0	75	18	500	650	600	800	N23, N33	VSC-9209S4
5.0 - 8.0	100	18	550	750	700	900	N23, N33	VSC-9209S5
5.0 - 8.0	200	18	1000	1300	1300	1500	N23, N33	VSC-9209S6
5.0 - 8.0	300	18	1100	1500	1400	1700	N23, N33	VSC-9209S7
8.0 - 12.4	10	12	200	250	300	350	N23, N33	VSX-9201S1
8.0 - 12.4	10	12	350	500	500	650	N23, N33	VSX-9201S1A
8.0 - 12.4	25	12	250	300	400	500	N23, N33	VSX-9201S2
8.0 - 12.4	25	12	350	500	500	650	N23, N33	VSX-9201S2A
8.0 - 12.4	50	12	400	500	500	650	N23, N33	VSX-9201S3
8.0 - 12.4	75	12	500	650	650	800	N23, N33	VSX-9201S4
8.0 - 12.4	100	12	550	750	850	1000	N23, N33	VSX-9201S5
8.0 - 12.4	200	12	850	1000	1100	1300	N23, N33	VSX-9201S6
8.0 - 12.4	300	12	1000	1200	1200	1400	N23, N33	VSX-9201S7
8.0 - 12.4	400	12	1200	1300	1500	1800	N23, N33	VSX-9201S8
8.0 - 12.4	500	12	1300	1500	1800	2000	N23, N33	VSX-9201S9
12.4 - 18.0	10	10	200	250	300	350	N34	VSU-9202S1
12.4 - 18.0	10	10	400	500	550	650	N34	VSU-9202S1A
12.4 - 18.0	25	10	250	300	350	400	N34	VSU-9202S2
12.4 - 18.0	25	10	400	500	550	650	N34	VSU-9202S2A
12.4 - 18.0	50	10	400	500	550	650	N34	VSU-9202S3
12.4 - 18.0	75	10	500	650	650	800	N34	VSU-9202S4
12.4 - 18.0	100	10	700	850	850	1000	N34	VSU-9202S5
12.4 - 18.0	200	10	800	950	950	1100	N34	VSU-9202S6
12.4 - 18.0	300	10	1000	1200	1200	1400	N34	VSU-9202S7
18.0 - 26.0	10	8	200	300	300	500	N34	VSK-9204S1
18.0 - 26.0	10	8	350	550	500	700	N34	VSK-9204S1A
18.0 - 26.0	25	8	300	350	350	500	N34	VSK-9204S2
18.0 - 26.0	25	8	350	550	500	700	N34	VSK-9204S2A
18.0 - 26.0	50	8	350	450	500	700	N34	VSK-9204S3
18.0 - 26.0	75	8	400	550	550	750	N34	VSK-9204S4
18.0 - 26.0	100	8	500	650	600	800	N34	VSK-9204S5
18.0 - 26.0	150	8	600	850	750	900	N34	VSK-9204S6
18.0 - 26.0	200	8	700	1100	1200	1400	N34	VSK-9204S7
26.5 - 40.0	10	6	400	300	600	850	N34	VSA-9210S1
26.5 - 40.0	25	6	500	700	600	850	N34	VSA-9210S2
26.5 - 40.0	50	6	600	1000	900	1100	N34	VSA-9210S3
26.5 - 40.0	75	6	700	1200	1100	1400	N34	VSA-9210S4
26.5 - 40.0	100	6	800	1300	1150	1400	N34	VSA-9210S5
26.5 - 40.0	150	6	1000	1300	1150	1400	N34	VSA-9210S6
40 - 50	10	6.5	500	700	650	850	N34	VSQ-9219S1
40 - 50	25	6.5	500	700	650	850	N34	VSQ-9219S2
40 - 50	50	6.5	850	1000	1000	1200	N34	VSQ-9219S3
40 - 50	75	6.5	1000	1200	1100	1400	N34	VSQ-9219S4
40 - 50	100	6.5	1000	1200	1100	1400	N34	VSQ-9219S5
50 - 60	10	6	500	700	600	850	N34	VSE-9220S1
50 - 60	25	6	500	800	600	900	N34	VSE-9220S2
50 - 60	50	6	1000	1200	1100	1400	N34	VSE-9220S3
50 - 60	75	6	1000	1200	1100	1400	N34	VSE-9220S4

varian

ERRATA

In the table of General Characteristics on page 2, the values under "Maximum Bias Voltage" for the VSA-9210 family of microwave Gunn-effect diodes should read "7.5 Vdc" not "6 Vdc".

varian/solid state west division/611 hansen way/palo alto/california 94303

NOTES:

1. Characteristics and curves are based on performance tests. These values may change without notice as a result of additional data or product refinement. Consult the Varian Solid State West Division before using this information for final equipment design.
2. Power output is measured at a heat sink temperature of 25°C at the lowest and highest frequency points in the operating frequency band in a Varian Critically Coupled Cavity. Each diode is serialized and minimum power output is verified across the frequency band.
3. Voltage specified is the maximum voltage required for operation within the frequency band specified. Bias voltage generally decreases as frequency increases.
4. Case styles listed are generally in factory stock. Diodes may also be supplied in the following case styles: N20, N23, N33, N34, N57, N103, N111, and N113. Heat sink of the diode package is the cathode.
5. The suffix "S1", "S2", etc. denotes power output. The suffix "N33", "N34", etc. denotes diode case style. They are used for quoting and ordering purposes. When an order is received at Varian, e.g. VSX-9201S1N33, a two-letter suffix is assigned, e.g. VSX-9201AP, to identify the customer and the exact specification requirements.
6. Power output is measured in a Varian Critically Coupled Cavity at a heat sink temperature of 25°C at a specified center frequency. Exact operating frequency must be specified at time of order.

OUTLINE DRAWINGS

Case N20

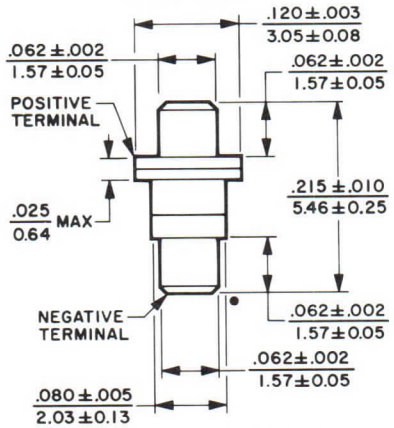

Ls = 0.50 nH Cp = 0.18 pF

Case N23

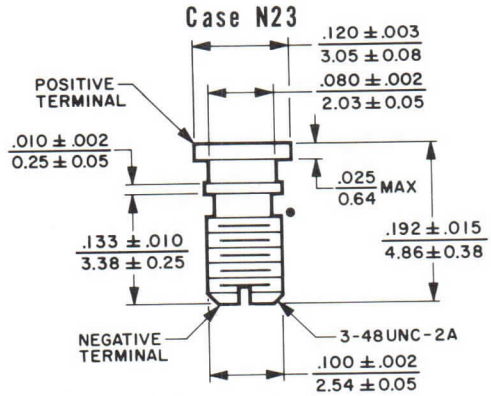

Ls = 0.40 nH Cp = 0.33 pF

Case N33

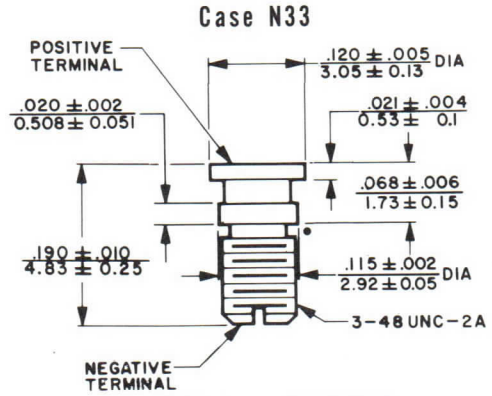

Ls = 0.35 nH Cp = 0.37 pF

Case N34

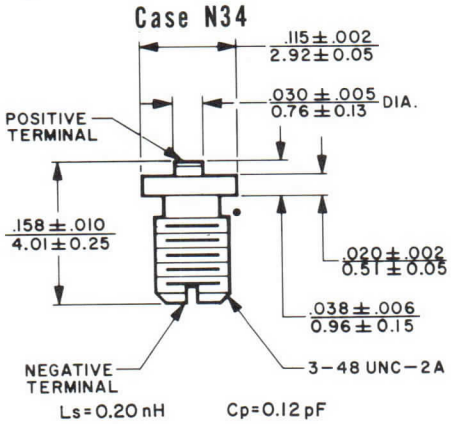

Ls = 0.20 nH Cp = 0.12 pF

Case N57

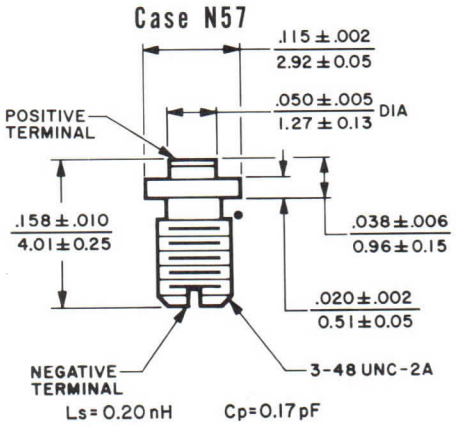

Ls = 0.20 nH Cp = 0.17 pF

Case N103

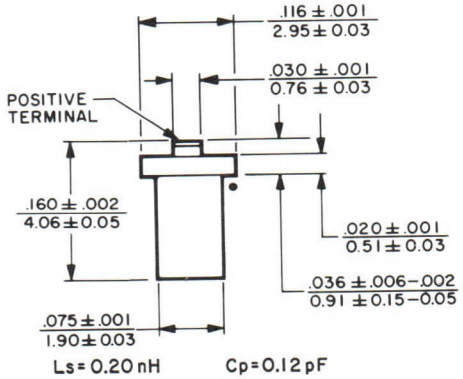

Ls = 0.20 nH Cp = 0.12 pF

Case N111

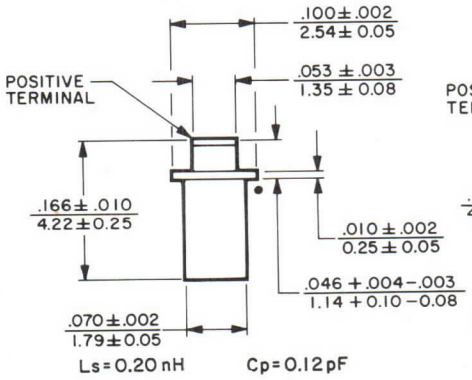

Ls = 0.20 nH Cp = 0.12 pF

Case N113

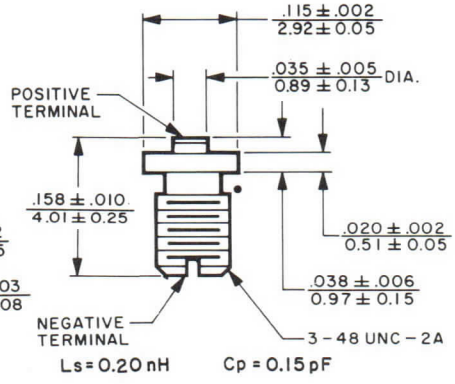

Ls = 0.20 nH Cp = 0.15 pF

• HEAT SINK END

DIMENSIONS: ← inch / mm →

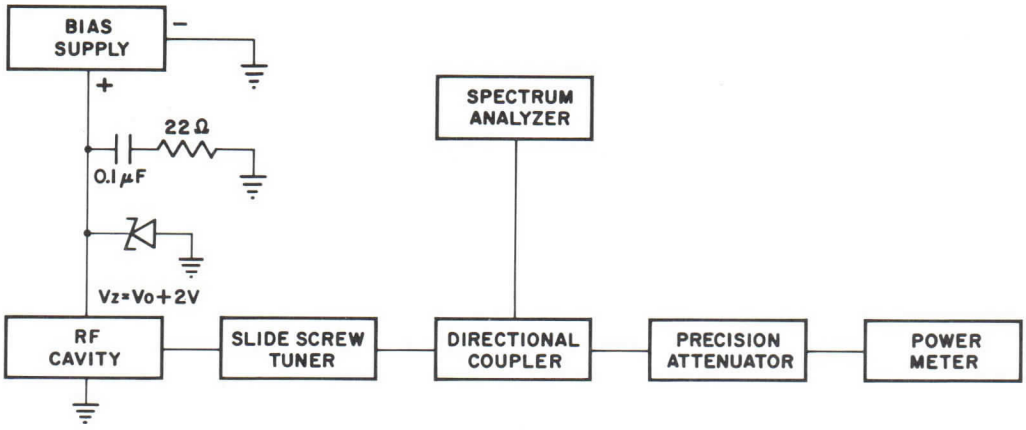

FIGURE 1 Block diagram of a conventional microwave test arrangement for evaluating diode performance.

APPLICATION NOTES

TYPICAL DEVICE PERFORMANCE CHARACTERISTICS

Performance of a Gunn diode is critically dependent on the circuit in which it is used. The following discussion of Varian Gunn diode performance presents general information for use as basic guidelines in designing the circuit with the diode. Diode users are encouraged to consult with Varian regarding specific information on device characteristics and circuit requirements. We are continually developing more comprehensive and specific device characterization information to help the user of Varian Gunn diodes.

NOISE CHARACTERISTICS

Noise performance of Gunn diodes is quite good in terms of both the FM and AM noise from the devices in standard circuits. FM noise of an oscillator is inversely proportional to the loaded Q of the circuit. For good low noise performance, a high Q circuit should be used. The curve in Figure 2 below presents typical FM noise of a Varian Gunn diode in a waveguide cavity having a circuit Q $\approx$ 2,000. Loaded Qs of common circuits range from 50 up to several thousands and FM noise varies in inverse proportion to the ratio of the Qs. Typically, very broadband tunable Gunn oscillators using varactor diodes have Qs less than 50 and therefore have higher FM noise as shown in Figure 3.

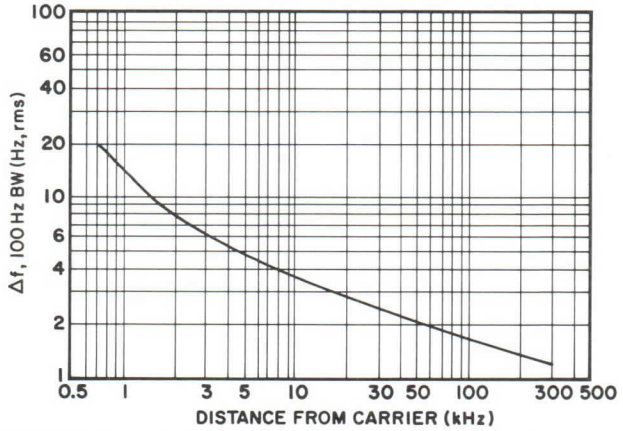

FIGURE 2 Typical double-sideband FM noise performance of a Varian Gunn diode in an X-band waveguide cavity with a Q $\approx$ 2000.

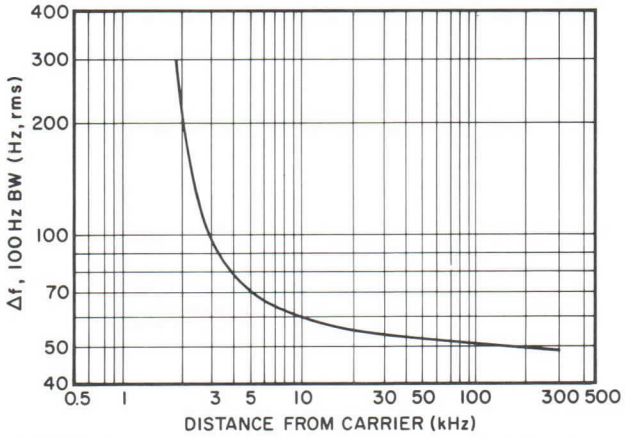

FIGURE 3 Typical double-sideband FM noise performance of a Varian Gunn diode in an X-band waveguide cavity with a Q $\leq$50.

On the other hand, Gunn devices which are tunable with YIG spheres or with very-high-Q waveguide circuits have low FM noise due to the effective high Q of the tuning circuit. AM noise of a Gunn diode is also generally quite low and typical AM noise performance of a Varian Gunn diode is shown in Figure 4.

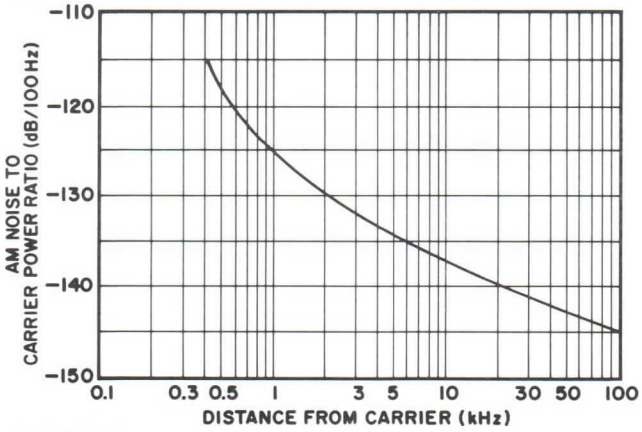

FIGURE 4 Typical double-sideband AM noise characteristics of an X-band Gunn diode.

FREQUENCY AND POWER VARIATION AS A FUNCTION OF TEMPERATURE

Critical parameters in the design of a Gunn oscillator are the relationships of frequency and power to temperature. These relationships are not simple because many factors contribute to both frequency and power variation. However, there are some general criteria which are useful in the design and use of the Gunn diode. First of all, frequency variation is a function of all circuit parameters plus device parameters. Frequency changes in a simple cavity can be easily calculated in terms of the total variation with respect to a given temperature range by taking into account the metal movement of the cavity with temperature. However, in most cavities, there are other contributing factors, such as diode support posts, tuning elements, (whether mechanical or electrical) and load contribution. All of these factors must be considered when determining the exact change of circuit frequency with temperature. In general, for a very high Q circuit, the change in frequency is determined almost completely by the circuit parameters and can be controlled by standard microwave circuit techniques. As the Q of the cavity decreases, especially at loaded Qs of 50 or less, the device contribution becomes significant and at very low Qs the device is a major cause of frequency shift with temperature. Typical values at X-band frequencies for the device itself range from -0.5 to -1.5 MHz/°C. Thus, in a low Q circuit, meaning Qs less than 50, 1 MHz/°C is a typical value. At higher Qs, i.e., above 1,000, temperature coefficient is controlled more by circuit design and variations of 200 kHz/°C to 400 kHz/°C can be achieved. By going to higher Qs, such as with additional stable cavities or by selective circuit compensation over narrow operating bandwidths, it is possible to realize temperature coefficients of 50 kHz/°C.

Power variation with temperature is also a function of both circuit and device parameters. The efficiency of a Gunn device decreases with increasing temperature. A general rule of thumb is that a device will have between 0.02 and 0.04 dB/°C power variation as a function of temperature. This can be improved or made worse by the conditions under which the effective match to the device itself is made. For example, the diode and load impedances can be matched at higher or lower temperatures and thereby produce different rates of power level variation with temperature, since the impedance match between the device and the load also changes with temperature.

Further, the coupling from the load to the device can be changed by temperature to minimize the rate of power variation. Another technique for minimizing power variation with temperature is to compensate the bias supply in the direction of minimum power variation by increasing the voltage, and therefore the power input to the device, as the temperature increases.

BIAS VOLTAGE EFFECTS

Both frequency and output power of a Gunn device are sensitive to the voltage applied to the device.

The change of frequency with device bias is typically called modulation sensitivity or pushing factor and is related to both the device parameters and the circuit parameters. In general, the modulation sensitivity of a Gunn device is inversely proportional to the loaded cavity Q. For typical Gunn diodes in a cavity having a Q of 1,000, modulation sensitivity is usually 3 to 5 MHz/V. This value, of course, is a function of the absolute magnitude of the bias voltage applied and is lowest near the optimum efficiency point of the device. Figure 5 shows modulation sensitivity in a typical waveguide circuit.

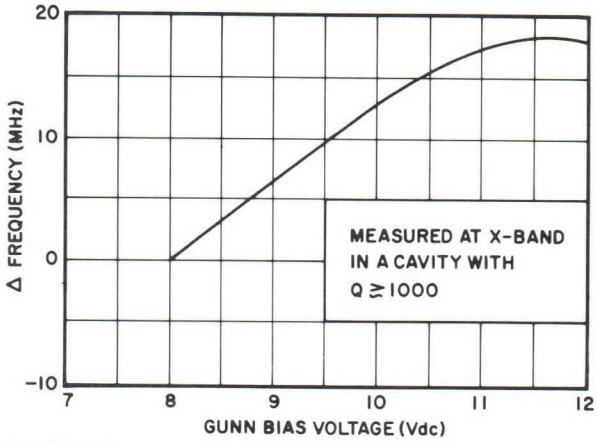

FIGURE 5 Modulation sensitivity of a Gunn diode in a typical waveguide circuit.

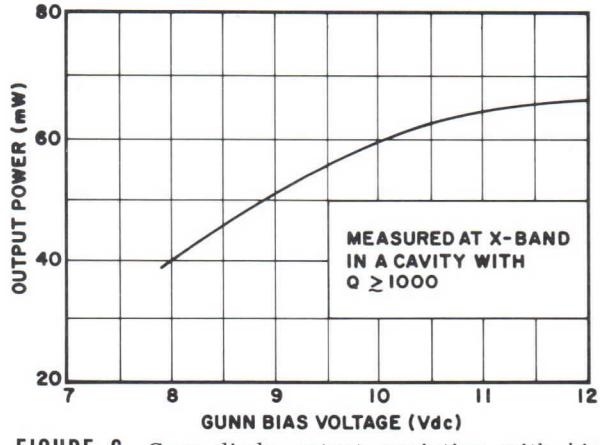

FIGURE 6 Gunn-diode output variation with bias voltage.

Output power variation is a direct function of the bias voltage applied to the device and is lowest near device saturation with voltage and is highest near the start of oscillations. A typical value of the power pushing factor in a cavity with a Q of 1,000 and near optimum efficiency is 0.5 dB/V. Figure 6 shows power pushing in a waveguide circuit.

EFFICIENCY OF GUNN DEVICES

The efficiency of Gunn devices is a function of device design parameters, material quality, and operating temperature. Typical Gunn device efficiencies are shown in Figure 7.

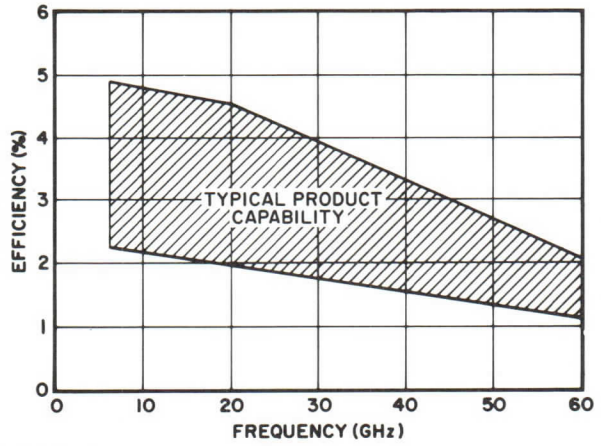

FIGURE 7 State-of-the-art and typical efficiencies obtainable with Gunn devices.

In designing a Gunn oscillator, noise, temperature of operation, pulling factor, etc., usually require considerable compromise to achieve typical operating efficiencies of from 1/2 to 1/3 the values obtainable under ideal conditions.

BIAS CIRCUIT CONSIDERATIONS

The Gunn diode is widely accepted as a highly reliable source of microwave energy. However, to realize the inherent reliability provided by the Gunn diode, the proper application of these devices in microwave circuits must be understood.

There are two primary causes of catastrophic failures in Gunn diodes — overheating and overvoltage. Overvoltage can occur in a subtle manner that is often overlooked. Even though a power supply is very well regulated, spikes of voltage great enough to exceed the breakdown voltage (Vb) may be induced due to the inherent current drop in a Gunn diode. Only a voltage spike is required to initiate breakdown. The charge stored in the line between the voltage source and the Gunn diode may, when added to the d-c bias, produce a voltage spike large enough to cause failure when the current drops from its threshold value to its operating value.

The breakdown electric field of a Gunn diode is related to the product of average doping concentration and length of the active region ($n_o\ell$) of the device. Depending on the device design ($n_o\ell$ product and interface), practical devices exhibit pulsed breakdown voltages at room temperature of 5 to 15 times their threshold voltages. Normal CW operating voltage (V_o) is 3 to 4 times the threshold voltage. Hence, there is usually a reasonable safety factor.

As the Gunn-diode bias voltage increases past threshold, the current drops rapidly (if one estimates feed-through capacitance at 100 pF and series resistance at 3 ohms, the time constant of the current drop is 300 ps). See Figure 8. Any series inductance in the bias line

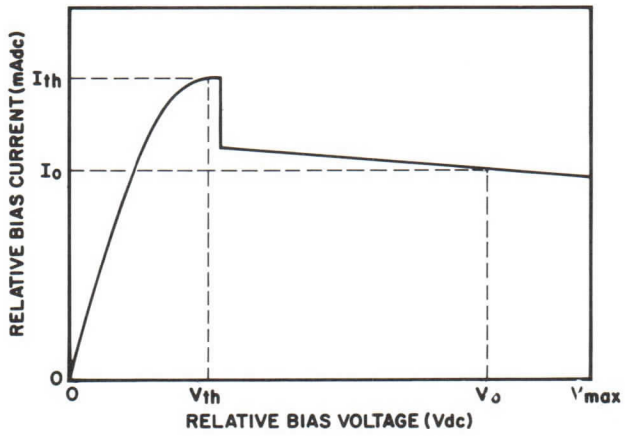

FIGURE 8 Gunn-diode bias characteristics.

creates a voltage spike equal to -L(di/dt). If the sum of the operating voltage and spike voltage exceeds the breakdown voltage, the device breaks down and the diode may fail.

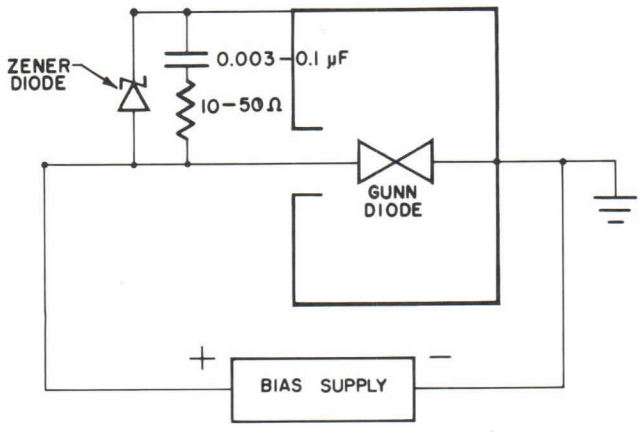

FIGURE 9 Typical Gunn diode bias circuit with zener diode to protect against transient voltage spikes, and a resistor-capacitor leg to minimize bias circuit oscillation.

These problems can be corrected by reducing the bias line inductance (L), by increasing RC, and/or by adding zener diodes as shown in Figure 9. One straightforward way to solve the problem is to place a large tantalum capacitor (1 μF or larger) across the bias terminals, as close as possible to the diode. This increases the circuit time constant and loads any transient spikes which occur. All leads should be as short as possible. This large capacitor will also aid in suppressing bias circuit oscillation. To insure positive protection of the Gunn diode, the zener diode response time should be less than 100 ns.

OPERATING PRECAUTIONS

To assure satisfactory performance and long life, the following precautionary measures should be taken:

1. Sufficient heat sinking should be provided to dissipate the heat generated by the Gunn diode.
2. Make sure the operating voltage for the Gunn diode is positive. A negative voltage may damage the diode.
3. The bias power supply should be capable of delivering maximum threshold current at the lowest operating case temperature.
4. Each diode should be protected against voltage transients and bias current oscillations.

RELIABILITY

Varian Associates has manufactured Gunn diodes since 1963. Some of the many major programs using Varian Gunn diodes are:

- NIMBUS Satellite
- TIROS Satellite
- F-14 Aircraft Radar
- Standard Missile
- F-15 Aircraft Radar
- Standard II Missile
- F-16 Aircraft Radar
- MARK45 Fuse Program

Since May 1968, Varian has had a continually operating Gunn diode life test program. Through October 3, 1975, a group of 28 diodes (X through Ka bands; ranging in output power capability from 18 to 510 mW) has operated a total of 997,637 device hours. All diodes in the life test program utilize direct metal Au-Ge-Ni contacts and are ultrasonically bonded to the copper studs of N-33 and N-34 packages. The diodes are operated in waveguide cavities at rated voltage into a resistive termination. Bias circuits include transient and oscillation suppression to prevent possible destructive voltage spikes. All operation is at room temperature with forced air cooling to maintain stable cavity temperature. The diodes on life test are operated under continuous operating conditions and randomly selected from regular production runs after the standard 72 hour operating burn-in.

Summaries of the life test results of all the diodes are listed in Table I below:

TABLE I
Reliability of Continuous-operation Devices

Total Quantity	Total Operation (h)	Total Failures*	Confidence Level (%)	MTBF (h)	Failure Rate (per million hours)
28	997,639	1	50	614,666	1.63
			60	509,723	1.96
			90	267,932	3.73

* Failure Criteria are that the device operating current or output power changes significantly (>3 dB), or that the device experiences catastrophic failure.

PHYSICAL AND ENVIRONMENTAL TESTS

Varian Gunn diodes are capable of meeting the following MIL-STD-750 Specification requirements under the test conditions noted.

Test	MIL-STD-750 Reference	Test Conditions
Steady State Operating Life	1026.1	1000 hours minimum operating time at maximum active layer temperature of 225° C
High Temperature Life	1031.1	1000 hours minimum storage time at 150° C
Physical Dimensions	2066	Device profile at 20X
Solderability	2026	Sn 60, Pb 40, solder at 230° C
Temperature Cycling	1051.1 Cond. B	5 cycles from -65° C to +150° C, 5 hours at extremes, 5 minute transfer
Thermal Shock	1056.1	5 cycles from 0°C to +100°C, 3 second transfer
Moisture Resistance	1021.1	10 days, 90-98% RH, -10°C to +65°C nonoperating
Shock	2016.1	5 blows each, X_1, Y_1, Y_2, 1500 G, 0.5 ms pulse
Vibration Fatigue	2046	32 ± 8 hours each X, Y, Z, 96 hour total, 60 Hz, 20 G min.
Vibration Variable Frequency	2056	Four 4-minute cycles each X, Y, Z, at 20 G min. 100 to 2000 Hz
Constant Acceleration	2006	1 minute each X_1, Y_1, Y_2, at 20,000 G
Terminal Strength	2036.1 Cond. B	Stud package — 2 pounds for 3 s, 120° apart
Salt Atmosphere	1041.1	35° fog for 24 hours

CARRIER TO SIDEBAND RATIOS FOR FREQUENCY MODULATED SIGNALS

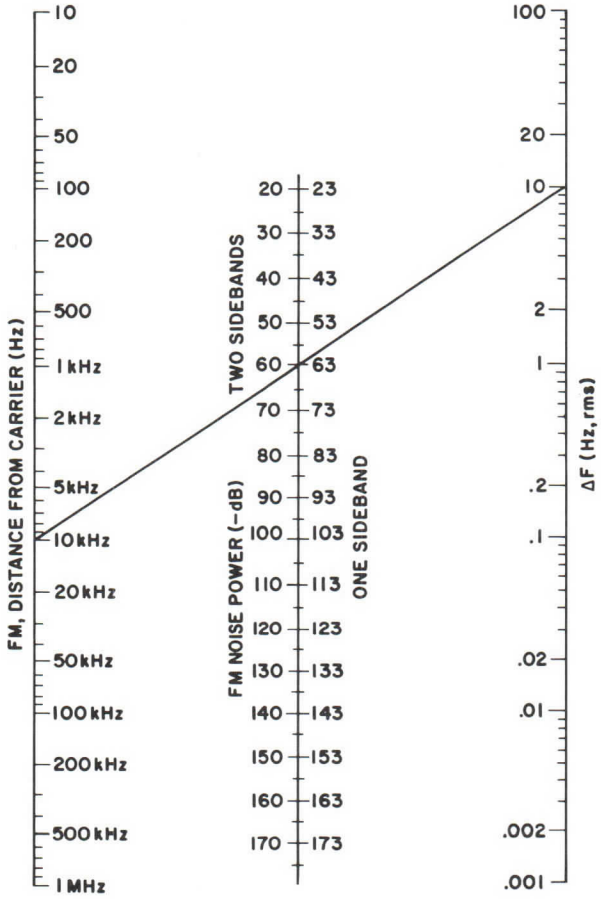

In the nomogram, a straight line has been drawn between the 10 kHz point on the FM, distance from the carrier, scale to the 10 Hz point on the ΔF scale.

To convert FM noise from ΔF in Hz rms to noise power in dBc, find the intersecting point on the center scale. In the example at the left, we find that double sideband noise power is 60 dBc and that single sideband noise power is 63 dBc. Conversion is independent of measurement bandwidth, however, the actual value of FM noise does depend on bandwidth. Hence, bandwidth must be specified.

$$\frac{P_c}{P_{SB}}\ (dB) = 20 \log \frac{Fm}{\Delta F\ (rms)} \quad \text{FOR TWO SIDEBANDS}$$

WHERE:

P_c = POWER IN THE CARRIER
P_{SB} = POWER IN THE SIDEBAND
FM = MODULATION FREQUENCY
ΔF = FREQUENCY CHANGE

varian
solid state division

TECHNICAL DATA

SILICON PARAMP VARACTOR DIODES

DESCRIPTION

Varian paramp diodes are microwave silicon varactor diodes which provide extraordinary gain/bandwidth performance with low-noise figure at frequencies from UHF through Ku bands. These diodes meet the most demanding mechanical and environmental requirements; their ultimate stress tolerances far exceed any conceivable equipment need. All contacts are bonded or brazed and the final package is hermetically sealed. The wide choice of package style, series inductance, and case capacitance permits the paramp designer to optimize his design quickly. Extremely rigid production controls yield diodes having uniform dynamic performance characteristics.

GENERAL CHARACTERISTICS[1]

Reverse Breakdown Voltage, min .... 5.5 Vdc
Power Dissipation, max ..... 250 mW
Operating Temperature ..... -65 to +175 °C
Storage Temperature ..... -65 to +200 °C

Junction Capacitance[2] at -6V (pF)	Cutoff Frequency[3] at -6V (GHz)	Minimum Pumped Figure of Merit[4] (GHz)	Type Number
0.1-0.2	100-150	16.5	VAP-81A
0.1-0.2	150-200	22.0	VAP-81B
0.1-0.2	200-250	27.5	VAP-81C
0.1-0.2	250-300	33.0	VAP-81D
0.1-0.2	300-350	38.5	VAP-81E
0.1-0.2	350-400	44.0	VAP-81F
0.1-0.2	400-450	49.5	VAP-81G
0.1-0.2	450-500	55.0	VAP-81H
0.1-0.2	500-550	60.5	VAP-81I
0.2-0.3	100-150	16.5	VAP-82A
0.2-0.3	150-200	22.0	VAP-82B
0.2-0.3	200-250	27.5	VAP-82C
0.2-0.3	250-300	33.0	VAP-82D
0.2-0.3	300-350	38.5	VAP-82E
0.3-0.5	100-150	16.5	VAP-83A
0.3-0.5	150-200	22.0	VAP-83B
0.3-0.5	200-250	27.5	VAP-83C

When ordering, specify the case style desired by adding the suffix N10, N15, N19, or N20. Example: VAP-81AN15. Other case styles can be supplied upon request.

OUTLINE DRAWINGS

Case N10

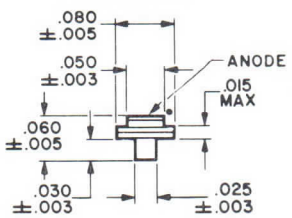

Case N15

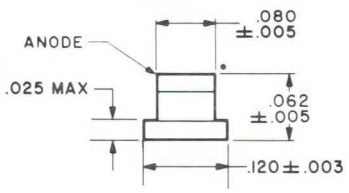

Case N19

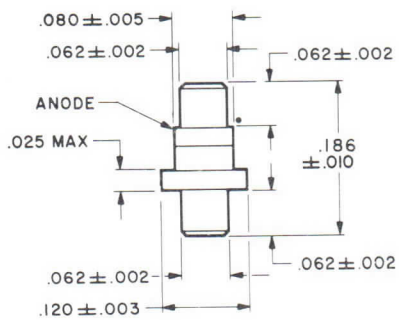

Case N20

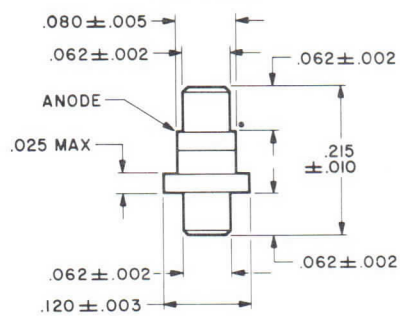

DIMENSIONS ARE IN INCHES

•HEAT SINK END

2149 6/69

Printed in U.S.A.

PACKAGE PARASITICS

All microwave packages possess a parallel capacitance and a series inductance. Package capacitance values are given for the empty case and do not include internal fringing capacitance (amounting to 0.01 to 0.02 pF). Values are obtained by substitution of a package for an air gap, the length of which corresponds to the package height (excluding prongs). Inductance is measured at 1 GHz in a 50 ohm coaxial cavity whose inner conductor is 120 mils in diameter.

Parallel case capacitance is controlled to within 0.01 pF by preselection and sorting of empty cases. Inductance can be selected to within ±10% of the values shown by variation in the internal contact structure. This selection ability and resultant control are of particular advantage when the end use involves fixed tuned circuitry.

Package Style	Parallel[5] Capacitance (pF)	Typical Series Inductance (nH)
N10	0.17-0.20	0.11
N15, N19	0.20-0.27	0.3
N20	0.12-0.16	0.4

NOTES:

1. Characteristic values are based on performance tests. These figures may change without notice as the result of additional data or product refinement. Contact the Varian Solid State Microwave Operation before using this information for equipment design.
2. Measured at -6 V using a 1 MHz capacitance bridge. Value does not include case capacitance.
3. Measured between 2 mA and -6 V at 10 GHz using a Smith Impedance Plot Method.
4. The minimum pumped figure of merit replaces both β and f_c' referenced in previous data sheets. See Varian Engineering Bulletin dated 8/66.
5. Can be controlled to within ±0.01 pF of any specified value within the range for a particular package style.

Typical Smith Chart Plot

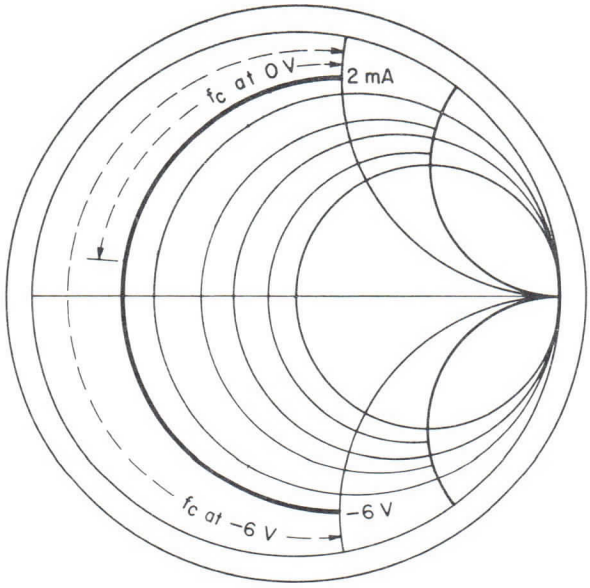

varian
solid state east division

TECHNICAL DATA

MICROWAVE GLASS PACKAGED SILICON PIN DIODES

FEATURES

- Low insertion loss
- High isolation
- Broadband performance
- SiO_2 passivation
- Excellent stability
- Low contact resistance
- Outstanding uniformity of diodes within the same slice and consistent repeatability from slice to slice.

DESCRIPTION

VSD-300 Series glass packaged silicon PIN diodes are designed specifically for use in applications where low insertion loss and high isolation are essential. Such applications include switches, phase shifters, active limiters, current-controlled attenuators and modulators. Efficient performance can be achieved over a wide frequency range. The passivation technique used provides optimum integrity at the surface junction region.

GENERAL CHARACTERISTICS

PERFORMANCE

Minimum Breakdown Voltage (V)	Junction Capacitance[2] ± 20% (pF)	Maximum Series Resistance (Ω)	Typical Minority Carrier Lifetime[3] (ns)	Type Number
50	0.10	1.7	5	VSD-300N74
100	0.05	2.0	75	VSD-310N74
100	0.12	1.5	100	VSD-311N74
100	0.25	0.7	135	VSD-312N74
200	0.05	2.0	150	VSD-320N74
200	0.10	1.5	150	VSD-321N74
200	0.25	0.7	150	VSD-322N74
200	0.50	0.4	240	VSD-323N74
200	0.75	0.3	240	VSD-324N74
500	0.10	1.5	350	VSD-330N74
500	0.25	0.7	350	VSD-331N74

ENVIRONMENTAL

Temperature Range

Operating ..... -65 to +150 °C

Storage ..... -85 to +300 °C

OUTLINE DRAWING

CASE N74

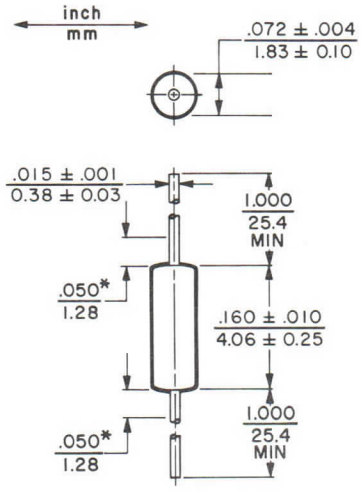

*WITHIN THIS ZONE, DIAMETER MAY VARY TO ALLOW FOR LEAD FINISHES AND IRREGULARITIES

C_p = 0.2 pF

L_S = 2.0 nH

3068 7/73

Printed in U.S.A.

CHARACTERISTIC CURVE [1]

Typical performance values

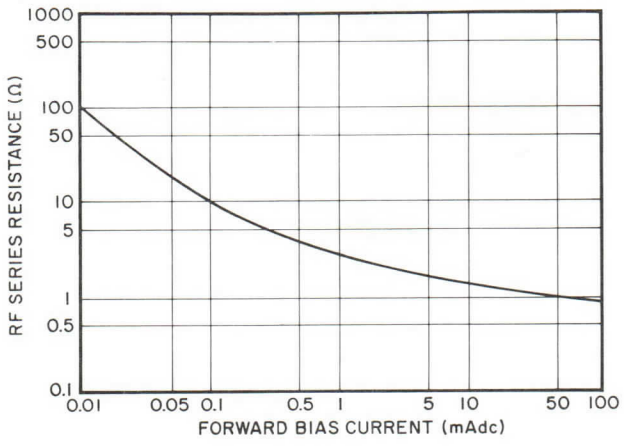

MINORITY CARRIER LIFETIME TEST CIRCUIT

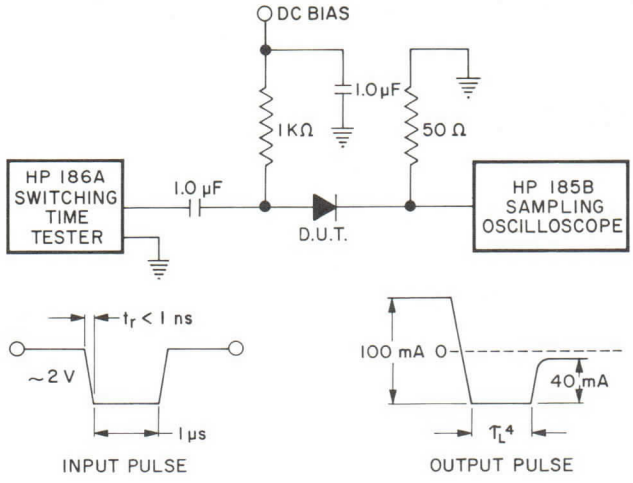

NOTES:

1. Characteristic values are based on performance tests. These figures may change without notice as a result of additional data or product refinement. Consult the Varian Solid State Division before using this information for final equipment design.

2. Measured at bias voltages of -30 V for breakdown voltages below 150 volts or -50 V above 150 volts using a 1-MHz capacitance bridge. To obtain total capacitance of the packaged device, add the particular case capacitance to the junction capacitance.

3. Minority carrier lifetime, τ_L, is measured directly at the test output using the test circuit above.

varian beverly

PRELIMINARY
TECHNICAL DATA

MICROWAVE PIN SWITCHING DIODES

DESCRIPTION

Varian PIN switching diodes are high-power, silicon semiconductors for microwave applications needing voltage control of r-f power in the nanosecond-to-microsecond range. They are ideal for use as duplexers, voltage-controlled attenuators, limiters, phase shifters, and amplitude modulators. These diodes operate over a wide dynamic range of r-f series resistance, from less than 0.4 to more than 12,000 ohms.

These devices feature double-diffused junctions with gold-to-gold thermo-compression bonds and hard-brazed joints throughout. These features, together with careful thermo-mechanical matching and extremely low thermal impedances, provide stable, long-life performance even under adverse environmental conditions.

PIN switching diodes offer the circuit designer a wide choice of capacitance, switching speeds, and package configurations. Unlike the common selection method, Varian PIN diodes are designed to customer circuit specifications, providing exceptionally tight tolerances and piece-to-piece uniformity.

GENERAL CHARACTERISTICS[1]

PACKAGE PARASITICS

Package Style	Typical Case Capacitance (pF)	Typical Series Inductance (nH)
N10	0.18	0.15
N19	0.22	0.30
N20	0.15	0.50

ENVIRONMENTAL

Temperature Range, max

Operating . . . . . -65 to +175 °C

Storage . . . . . -65 to +200 °C

OUTLINE DRAWINGS

Case N10

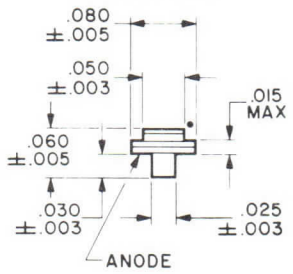

Case N19

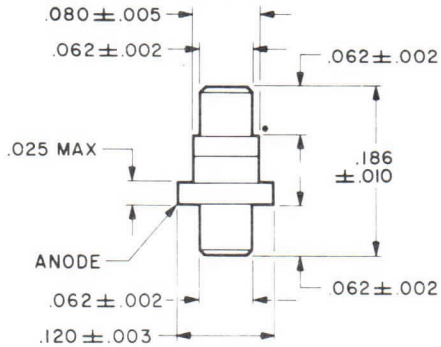

Case N20

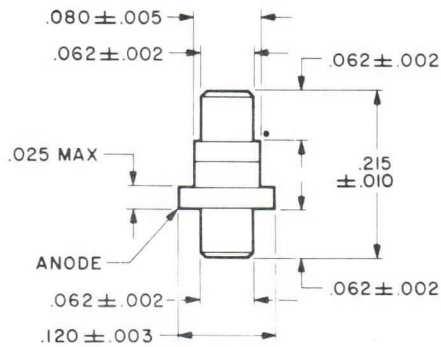

ALL DIAMETERS CONCENTRIC WITHIN .005 T.I.R.

DIMENSIONS ARE IN INCHES •HEAT SINK END

Other case styles available upon request.

2201 10/69

Printed in U.S.A.

GENERAL CHARACTERISTICS (CONT.)

These PIN switching diodes are available in two groups depending upon the application — the "standard series" and the "low-loss series."

The "Standard Series" Switching Diodes provide switching times from 100 to 300 nanoseconds in the normal switching mode (no special pulse shaping). Pulse pre-emphasis and shaping can shorten switching times in low-power CW circuits or high-power pulse circuits to about one-half the minority carrier lifetime.

The "Low Loss Series" emphasis is on extended carrier lifetime which results in extremely low diode losses in the circuit. In addition, a further advantage is present when drive (or modulation) power is limited since these PIN diodes are operable at low drive levels (5-10 mA forward drive). Switching time is lengthened as a result of long lifetime.

Minimum Voltage Breakdown [2,3] (V)	Maximum Junction Capacitance [4] (pF)	Maximum Series Resistance [5] (Ω)	Typical Minority Carrier Lifetime [6] (ns)	Maximum Peak RF Power (kW)	Maximum Thermal Resistance [7] (°C/W)	Type Number [8]
STANDARD SERIES						
200	0.4	1.5	150	0.3	50	VSD-201
200	1.4	0.7	150	0.3	30	VSD-203
500	0.3	1.5	150	2.0	30	VSD-501
500	0.7	0.8	150	2.0	15	VSD-502
500	1.4	0.5	150	2.0	10	VSD-503
750	0.3	1.3	200	5.0	30	VSD-701
750	0.7	0.8	200	6.0	15	VSD-702
1000	0.4	1.1	250	9.0	30	VSD-101
1000	0.7	0.8	250	9.0	15	VSD-102
1000	1.4	0.5	250	9.0	10	VSD-103
LOW-LOSS SERIES						
500	0.3	0.6	400	2.0	30	VSD-521
500	0.7	0.4	400	2.0	15	VSD-522
500	1.4	0.3	400	2.0	10	VSD-523
750	0.3	0.6	400	5.0	30	VSD-721
750	0.7	0.4	400	5.0	15	VSD-722
1000	0.4	0.8	400	9.0	30	VSD-121
1000	0.7	0.6	400	9.0	15	VSD-122

RF RESISTANCE VARIATION WITH BIAS CURRENT

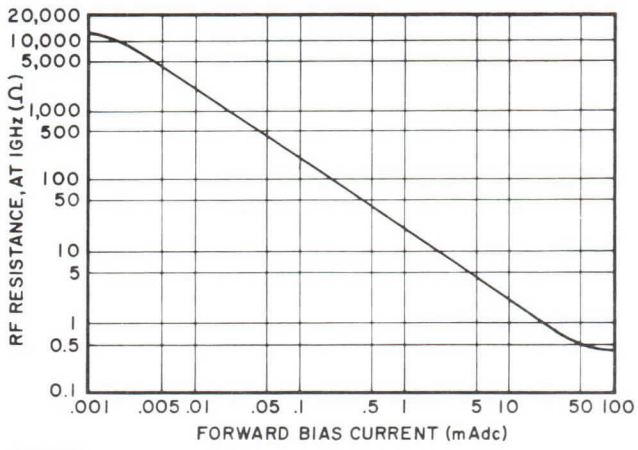

MINORITY CARRIER LIFETIME TEST CIRCUIT

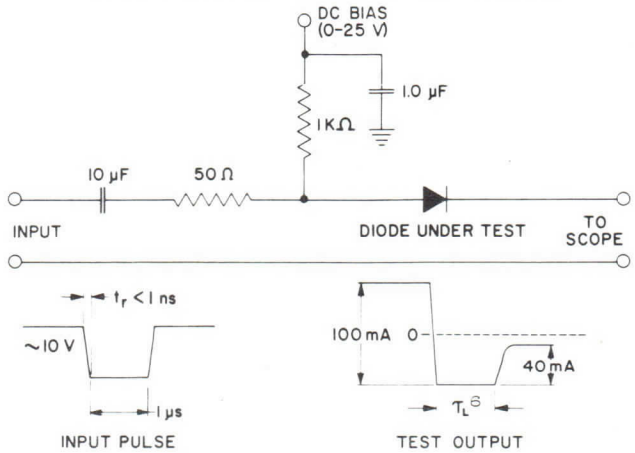

NOTES:

1. Characteristic values are based on performance data. These figures may change without notice as a result of additional data or product refinement. Consult the Solid State Division before using this information for final equipment design.
2. Voltage breakdown is measured at -10 μAdc.
3. 1000 V diodes not available in N10 case.
4. Measured at 150 V using a 1-MHz capacitance bridge. To obtain total capacitance of the packaged device, the capacitance of the particular case should be added to the junction capacitance.
5. Measured at 1 GHz with 100 mA of forward bias current.
6. Minority carrier lifetime, τ_L, is measured directly at the test output; see test circuit above.
7. Values are for an infinite heat sink and 25°C ambient temperature; not applicable to N10 case.
8. When ordering, specify case style by adding suffix N10, N19 or N20. Example: VSD-201N20.

varian beverly

PRELIMINARY
TECHNICAL DATA

STEP RECOVERY DIODES

DESCRIPTION

Varian Step Recovery Diodes are special silicon varactor diodes for use in high-order multiplication, pulse-sharpening, pulse-amplifying, and time-delay networks. These varactors feature controlled stored charge and optimized step-recovery characteristics. By careful processing, series resistance, series inductance, and parallel capacitance are kept extremely low. Only experience-proven Thermobond® brazing and welding techniques are used throughout to assure maximum reliability.

GENERAL CHARACTERISTICS[1]

Temperature Range, max

Operating ..... -65 to +175 °C

Storage ..... -65 to +200 °C

Case Style	Typical Case Capacitance (pF)	Typical Parasitic Inductance (nH)
N10	0.18	0.12
N16	0.15	0.50
N18	0.15	0.50
N20	0.15	0.50

OUTLINE DRAWINGS

Case N10

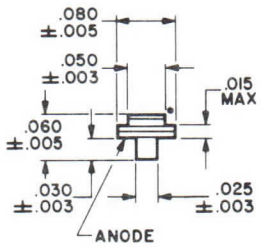

Case N16[2]

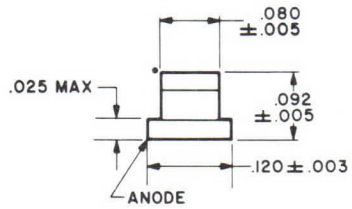

Case N18

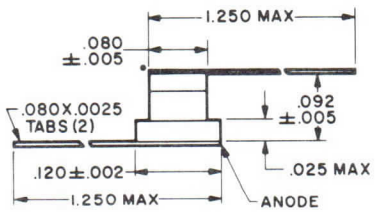

•HEAT SINK END

DIMENSIONS ARE IN INCHES

Case N20

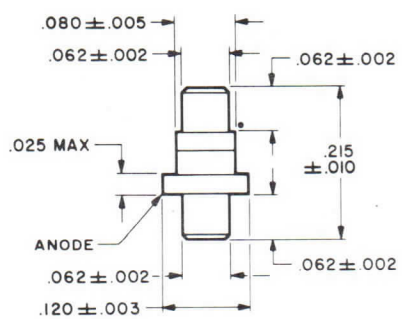

Other case styles available upon request.

2048 2/69

Printed in U.S.A.

STEP RECOVERY DIODES

Type Number	Minimum Voltage Breakdown[3] (V)	Minority Carrier Lifetime Min. (ns)	Minority Carrier Lifetime Typ. (ns)	Maximum Transition Time[4,5] (ps)	Typical Transition Time[4] (ps)
VAS-11	10	5	7	100	30
VAS-12	10	5	7	200	150
VAS-21	20	7	8.5	100	50
VAS-22	20	7	8.5	200	150
VAS-31	30	8	11	100	70
VAS-32	30	8	11	200	150
VAS-41	40	12	16	120	90
VAS-42	40	12	16	200	150
VAS-43	40	12	16	300	250
VAS-52	50	15	--	200	150
VAS-53	50	15	--	300	250
VAS-63	60	--	50	300	250

When ordering, add suffix letters and numbers to denote junction capacitance and case style desired.

Junction capacitance, measured at 0 V bias and 1 MHz, is normally within ±10% of a value specified in one of the following ranges: A, 0.5-0.8 pF; B, 0.8-1.0 pF; C, 1.1-3.0 pF; or D, 3.0 pF and above. Diodes can be supplied within ±3%, if desired, at moderately higher prices.

Standard case styles are N10, N16, N18 and N20. Custom packaging is available upon request. See case style data sheet.

Example: VAS-11 (A) (N10)

(C_j = 0.5-0.8 pF) (Case N10)

CHARACTERISTIC CURVES[6]

Typical performance values

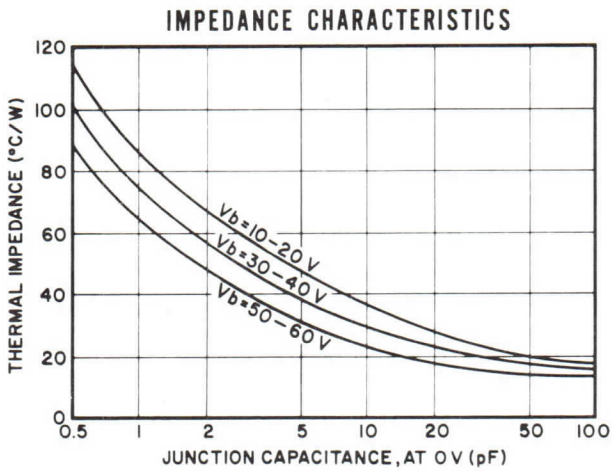

MEASUREMENT TECHNIQUES

STORED CHARGE

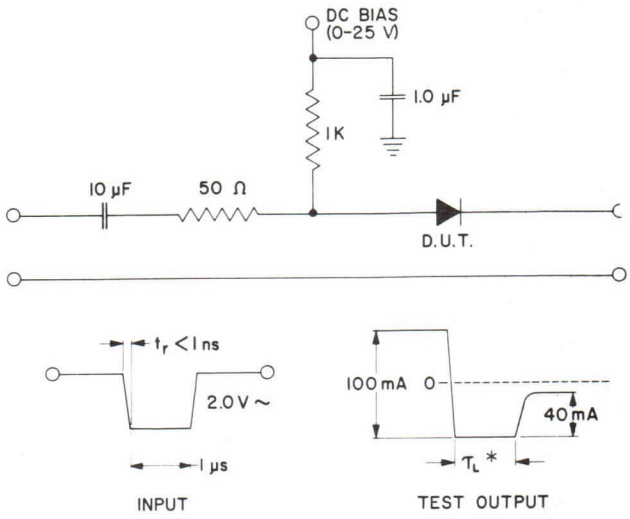

* Minority carrier lifetime, τ_L, is measured directly at the test output using the above circuit.

TRANSITION TIME

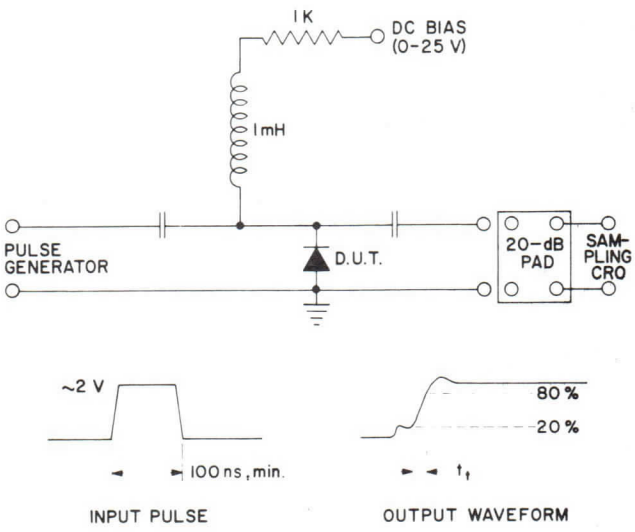

The initial blip on the output waveform trace represents the beginning of the recovery cycle. The steep ramp represents transition.

NOTES:

1. Characteristic values are based on performance data. These figures may change without notice as a result of additional data or product refinement. Consult the Solid State Microwave Operation before using this information for final equipment design.
2. Case N16 can be made with either a copper or Kovar heat sink.
3. Voltage breakdown, Vb, is measured at -10 µAdc.
4. Transition time measured between the 20 and 80% points on the voltage recovery trace.
5. These values are guaranteed for junction capacitances between 0.5 and 1.1 pF.
6. Applies to diodes having a standard N20 case with copper heat sink.

varian

TECHNICAL DATA

MICROWAVE GLASS PACKAGED SILICON TUNING DIODES

DESCRIPTION

This series of microwave glass-packaged, silicon tuning-varactor diodes features ultra-low leakage current over wide temperature ranges making these diodes suitable for applications requiring good frequency or phase stability. The combination of large capacitance variation and low loss at microwave frequencies also make these diodes ideal for full-band tuning up to C band, AFC, filter tuning, and cavity tuning. The outstanding production-lot uniformity of capacitance values and capacitance/voltage characteristics allow accurate tracking in multi-diode circuits.

GENERAL CHARACTERISTICS[1]

ELECTRICAL

Reverse Breakdown Voltages ... 45/60 V

Capacitance/Temperature Coefficient, typical[3] ..... 200 ppm/°C

Series Inductance

N60 Case ..... 3.0 nH

N74 Case ..... 2.0 nH

Package Capacitance ..... 0.2 pF

ENVIRONMENTAL

Ambient Temperature Range

Operating ..... -65 to +175 °C

Storage ..... -85 to +200 °C

OUTLINE DRAWINGS

CASE N60

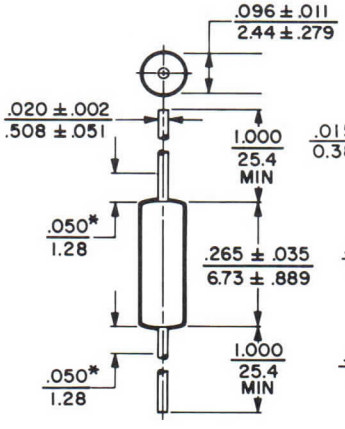

CASE N74

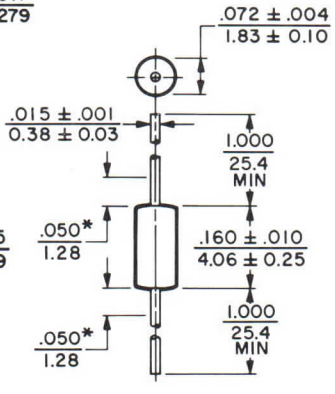

*WITHIN THIS ZONE, DIAMETER MAY VARY TO ALLOW FOR LEAD FINISHES AND IRREGULARITIES

inch / mm

PERFORMANCE CHARACTERISTICS[1]

Total Capacitance at -4 V bias (pF)	Minimum Q at -4 V	Minimum Total Capacitance Tuning Ratio	Type Number[4]
45-Volt Series[5]			
0.9-1.3	2000	3.5:1	VAT-91
1.3-1.7	2000	4.0:1	VAT-92
1.7-2.1	1800	4.5:1	VAT-93
2.1-3.4	1700	4.75:1	VAT-71
3.4-5.1	1700	4.9:1	VAT-72
5.1-6.8	1700	5.0:1	VAT-73
6.8-8.5	1400	5.25:1	VAT-74
8.5-10.2	1400	5.25:1	VAT-75
10.2-11.9	1400	5.25:1	VAT-76
11.9-13.6	1000	5.25:1	VAT-77
13.6-15.3	1000	5.25:1	VAT-78
15.3-18.7	1000	5.25:1	VAT-79
60-Volt Series[5]			
0.9-1.3	1500	4.0:1	VAT-61
1.3-1.7	1300	5.0:1	VAT-62
1.7-2.1	1300	5.25:1	VAT-63
2.1-3.4	1100	5.5:1	VAT-51
3.4-5.1	1000	6.0:1	VAT-52
5.1-6.8	1000	6.5:1	VAT-53
6.8-8.4	1000	7.0:1	VAT-54
8.4-10.1	900	7.0:1	VAT-55
10.1-11.7	900	7.0:1	VAT-56
11.7-13.4	900	7.0:1	VAT-57
13.4-15.1	900	7.0:1	VAT-58
15.1-18.4	900	7.0:1	VAT-59

3640 1/77

Printed in U.S.A.

CHARACTERISTIC CURVES [1]

Typical performance values

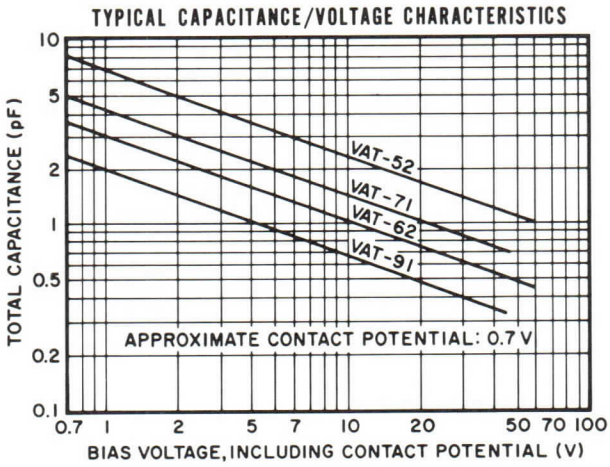

NOTES:

1. Characteristic values are based on performance tests. These figures may change without notice as a result of additional data or product refinement. The Varian Beverly Division should be consulted before using this information for final equipment design.

2. Measured with a reverse bias voltage equal to 80% of the minimum reverse breakdown voltage.

3. Averaged between -65 and +85°C. Capacitance Temperature Coefficient is calculated in parts per million per degree Celsius (ppm/°C) from:

$$T_C \text{ Coef} = \frac{\left[(C_T(\text{at } 85^\circ\text{C}) - C_T(\text{at } -65^\circ\text{C})\right] 10^6}{(85 + 65)\ C_T(\text{at } 25^\circ\text{C})}$$

where

C_T = Sum of junction capacitance at -4 volts bias plus case capacitance at a given ambient temperature.

4. These tuning diodes are packaged in N60 and N74 case styles. When ordering, specify the desired case style. For example: VAT-92N60 or VAT-92N74

5. The series voltage designation indicates the minimum reverse breakdown voltage at -10 μA.

varian
solid state east division

TECHNICAL DATA

MICROWAVE GLASS PACKAGED SILICON TUNING DIODES

DESCRIPTION

This series of microwave glass-packaged, silicon tuning-varactor diodes features ultra-low leakage current over wide temperature ranges making these diodes suitable for applications requiring good frequency or phase stability. The combination of large capacitance variation and low loss at microwave frequencies also make these diodes ideal for full-band tuning up to C band, AFC, filter tuning, and cavity tuning. The outstanding production-lot uniformity of capacitance values and capacitance/voltage characteristics allow accurate tracking in multi-diode circuits.

GENERAL CHARACTERISTICS[1]

ELECTRICAL

Reverse Breakdown Voltages ... 45/60 V

Capacitance/Temperature Coefficient, typical[3] ..... 200 ppm/°C

Series Inductance

N60 Case ..... 3.0 nH

N74 Case ..... 2.0 nH

Package Capacitance ..... 0.2 pF

ENVIRONMENTAL

Ambient Temperature Range

Operating ..... -65 to +175 °C

Storage ..... -85 to +200 °C

OUTLINE DRAWINGS

CASE N60

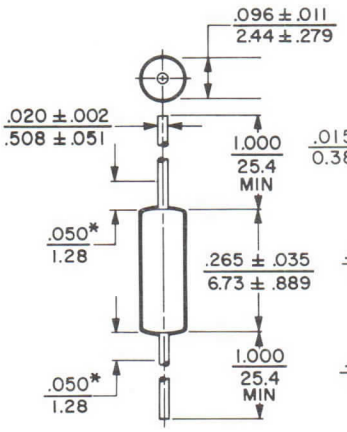

CASE N74

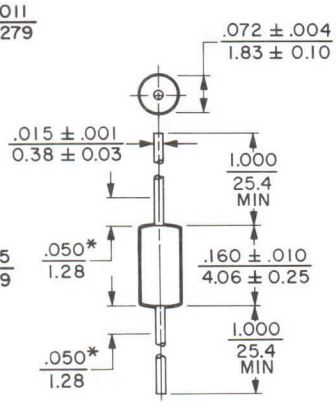

*WITHIN THIS ZONE, DIAMETER MAY VARY TO ALLOW FOR LEAD FINISHES AND IRREGULARITIES

inch
mm

PERFORMANCE CHARACTERISTICS[1]

Total Capacitance at 0 V bias (pF)	Minimum Q at -4 V	Minimum Total Capacitance Tuning Ratio	Type Number[4]
45-Volt Series[5]			
2-3	2000	3.5:1	VAT-91
3-4	2000	4.0:1	VAT-92
4-5	1800	4.5:1	VAT-93
5-8	1700	4.75:1	VAT-71
8-12	1700	4.9:1	VAT-72
12-16	1700	5.0:1	VAT-73
16-20	1400	5.25:1	VAT-74
20-24	1400	5.25:1	VAT-75
24-28	1400	5.25:1	VAT-76
28-32	1000	5.25:1	VAT-77
32-36	1000	5.25:1	VAT-78
36-44	1000	5.25:1	VAT-79
60-Volt Series[5]			
2-3	1500	4.0:1	VAT-61
3-4	1300	5.0:1	VAT-62
4-5	1300	5.25:1	VAT-63
5-8	1100	5.5:1	VAT-51
8-12	1000	6.0:1	VAT-52
12-16	1000	6.5:1	VAT-53
16-20	1000	7.0:1	VAT-54
20-24	900	7.0:1	VAT-55
24-28	900	7.0:1	VAT-56
28-32	900	7.0:1	VAT-57
32-36	800	7.0:1	VAT-58
36-44	800	7.0:1	VAT-59

3069 10/73

Printed in U.S.A.

CHARACTERISTIC CURVES [1]

Typical performance values

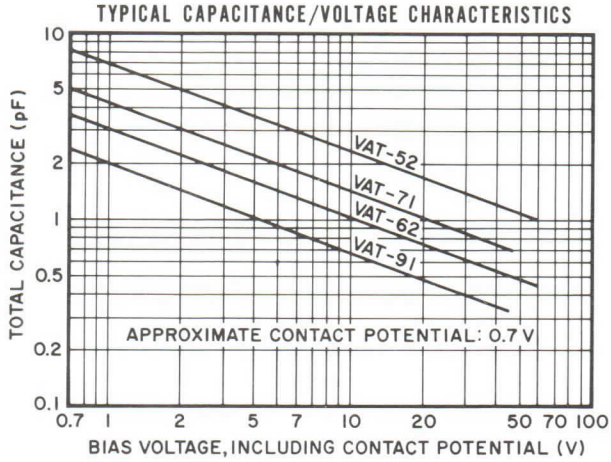

NOTES:

1. Characteristics and curves are based on performance tests. These values may change without notice as a result of additional data or product refinement. Consult the Varian Solid State East Division before using this information for final equipment design.

2. Measured with a reverse bias voltage equal to 80% of the minimum reverse breakdown voltage.

3. Averaged between -65 and +85°C. Capacitance Temperature Coefficient is calculated in parts per million per degree Celsius (ppm/°C) from:

$$T_C \text{ Coef} = \frac{\left[(C_T(\text{at } 85^\circ\text{C}) - C_T(\text{at } -65^\circ\text{C})\right] 10^6}{(85 + 65)\ C_T(\text{at } 25^\circ\text{C})}$$

where

C_T = Sum of junction capacitance at -4 volts bias plus case capacitance at a given ambient temperature.

4. These tuning diodes are packaged in N60 and N74 case styles. When ordering, specify the desired case style. For example: VAT-92N60 or VAT-92N74

5. The series voltage designation indicates the minimum reverse breakdown voltage at -10 μA.

varian beverly

TECHNICAL DATA

DIODE CASE STYLES

N10 & N11 Cases

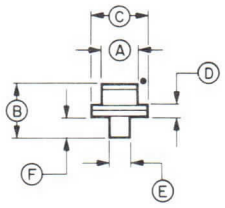

REF	DIMENSIONS	
	N10	N11
A	.050±.003	.050±.003
B	.060±.005	.075±.005
C	.080±.005	.080±.005
D	.015MAX	.015MAX
E	.025±.003	.025±.003
F	.030±.003	.030±.003

N12 & N13 Cases

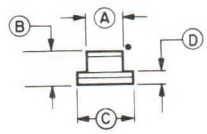

REF	DIMENSIONS	
	N12	N13
A	.050±.003	.050±.003
B	.030±.005	.045±.005
C	.080±.005	.080±.005
D	.015MAX	.015MAX

N15 & N16 Cases

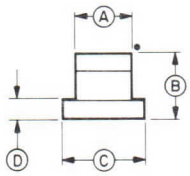

REF	DIMENSIONS	
	N15	N16
A	.080±.005	.080±.005
B	.062±.005	.092±.005
C	.120±.003	.120±.003
D	.025MAX	.025MAX

N17 & N18 Cases

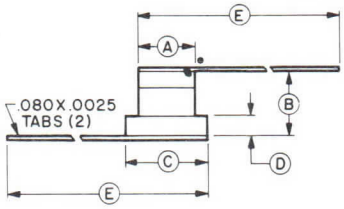

REF	DIMENSIONS	
	N17	N18
A	.080±.005	.080±.005
B	.062±.005	.092±.005
C	.120±.003	.120±.003
D	.025MAX	.025MAX
E	1.250MAX	1.250MAX

N19 & N20 Cases

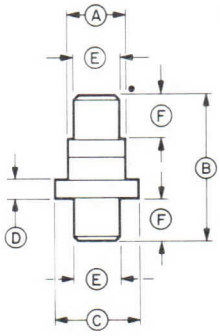

REF	DIMENSIONS	
	N19	N20
A	.080±.005	.080±.005
B	.186±.010	.215±.010
C	.120±.003	.120±.003
D	.025MAX	.025MAX
E	.062±.002	.062±.002
F	.062±.002	.062±.002

N21 & N22 Cases

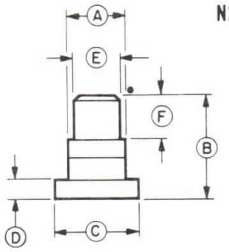

REF	DIMENSIONS	
	N21	N22
A	.080±.005	.080±.005
B	.124±.005	.153±.005
C	.120±.003	.120±.003
D	.025MAX	.025MAX
E	.062±.002	.062±.002
F	.062±.002	.062±.002

N23 Case

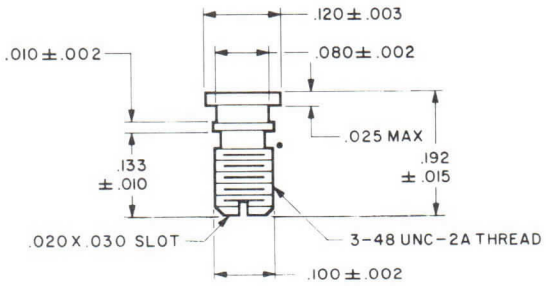

DIMENSIONS ARE IN INCHES.

•HEAT SINK END

DIODE CASE STYLES

N24 Case

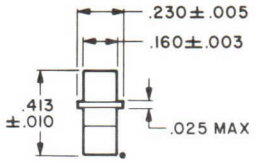

N25 Case

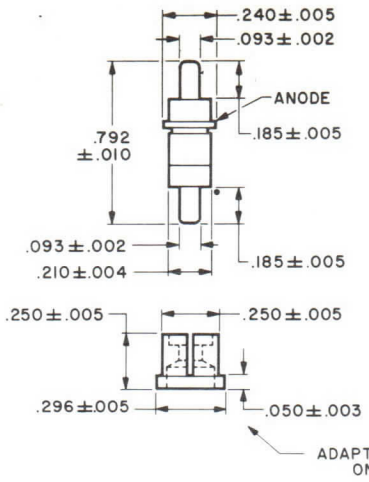

N26 Case

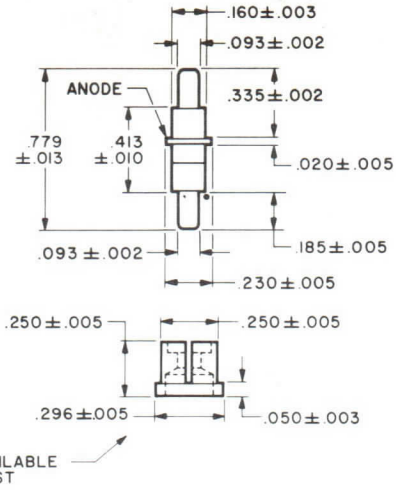

N27 Case

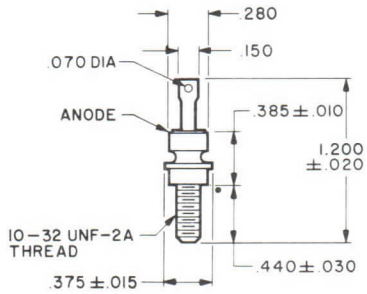

N28 Case

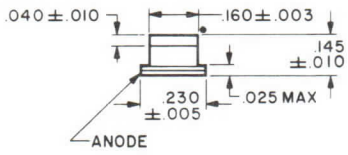

N29 Case

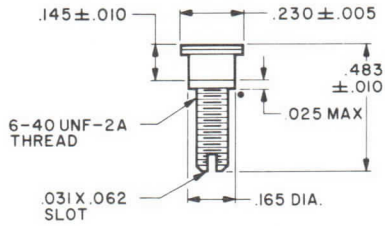

N30 Case

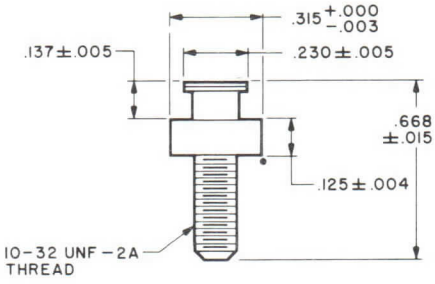

N31 Case

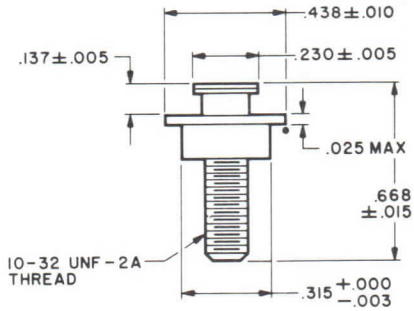

N32 Case

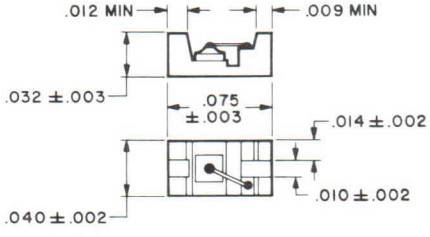

N33 Case

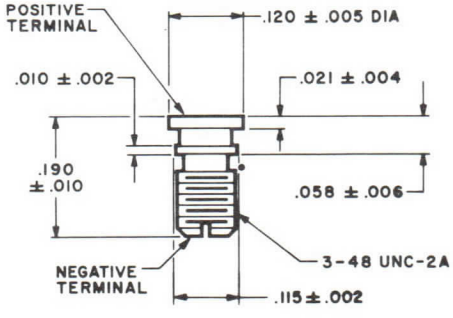

N34 Case

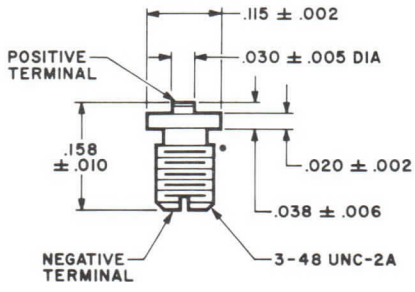

DIMENSIONS ARE IN INCHES

•HEAT SINK END

varian

TECHNICAL DATA

VAP-80 Series

PARAMP DIODES

DESCRIPTION

VAP-80 Series paramp diodes are microwave silicon varactor diodes which provide extraordinary gain/bandwidth performance with low noise figure at frequencies from UHF through Ku bands. These diodes meet the most demanding mechanical and environmental requirements; their ultimate stress tolerances far exceed any conceivable equipment need. All contacts are bonded or soldered and the final package is hermetically sealed. The wide choice of package style, series inductance, and case capacitance permits the paramp designer to optimize his design quickly. Extremely rigid production controls yield diodes having uniform dynamic performance characteristics.

GENERAL CHARACTERISTICS[1]

Reverse Breakdown Voltage, min .... 5.5 Vdc
Power Dissipation, max ..... 250 mW
Operating Temperature ..... -65 to +175 °C
Storage Temperature ..... -65 to +200 °C

Junction Capacitance[2] (pF)	Minimum Cutoff Frequency[3] (GHz)	Type Number
0.1-0.2	100	VAP-81A
0.1-0.2	150	VAP-81B
0.1-0.2	200	VAP-81C
0.1-0.2	250	VAP-81D
0.1-0.2	300	VAP-81E
0.1-0.2	350	VAP-81F
0.1-0.2	400	VAP-81G
0.1-0.2	450	VAP-81H
0.1-0.2	500	VAP-81 I
0.2-0.3	100	VAP-82A
0.2-0.3	150	VAP-82B
0.2-0.3	200	VAP-82C
0.2-0.3	250	VAP-82D
0.2-0.3	300	VAP-82E
0.3-0.5	100	VAP-83A
0.3-0.5	150	VAP-83B
0.3-0.5	200	VAP-83C

When ordering specify the case style desired by adding the suffix N9, N15, N19, or N20. Example: VAP-81AN15. Other case styles can be supplied upon request.

OUTLINE DRAWINGS

CASE STYLES

N9

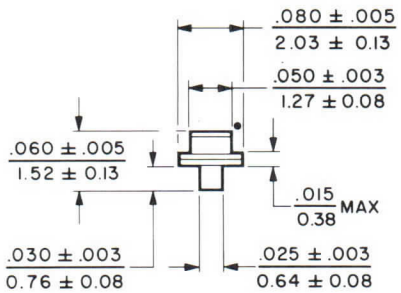

N15

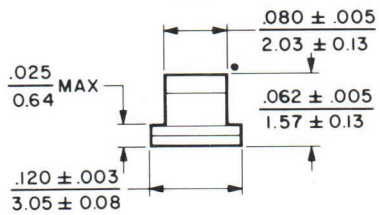

N19

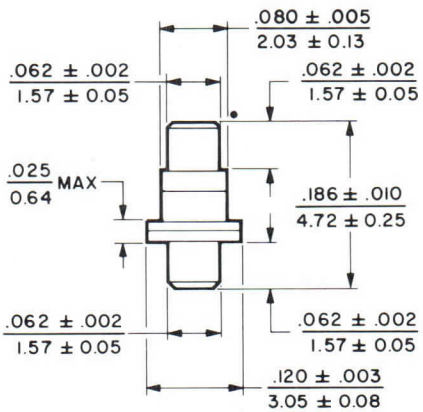

N20

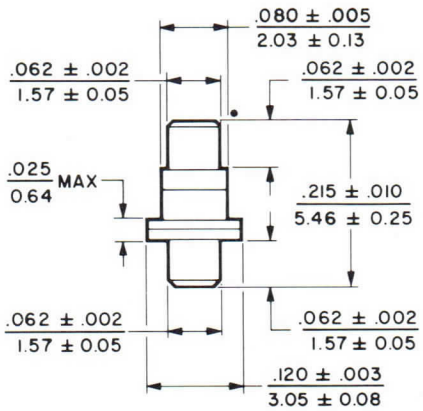

• ANODE AND HEAT SINK END

DIMENSIONS: ← inch / mm →

3651 2/77

Printed in U.S.A.

PACKAGE PARASITICS

All microwave packages possess a parallel capacitance and a series inductance. Package capacitance values are given for the empty case and do not include internal fringing capacitance (amounting to 0.01 to 0.02 pF). Values are obtained by substitution of a package for an air gap, the length of which corresponds to the package height (excluding prongs). Inductance is measured at 1 GHz in a 50 ohm coaxial cavity whose inner conductor is 120 mils in diameter.

Parallel case capacitance is controlled to within 0.01 pF by preselection and sorting of empty cases. Inductance can be selected to within ±10% of the values shown by variation in the internal lead structure. This selection ability and resultant control are of particular advantage when the end use involves fixed tuned circuitry.

Package Style	Parallel [4] Capacitance (pF)	Typical Series Inductance (nH)
N9	0.20	0.14
N15, N19	0.25	0.40
N20	0.14	0.50

NOTES:

1. Characteristic values are based on performance tests. These figures may change without notice as the result of additional data or product refinement. Contact the Varian Beverly Division before using this information for equipment design.
2. Measured at -6 V using a 1 MHz capacitance bridge. Values do not include case capacitance.
3. Measured between 2 mA and -6 V at 10 GHz using a Smith Impedance Plot Method.
4. Can be controlled to within ±0.01 pF of the specified value for a particular package or style.

Typical Smith Chart Plot

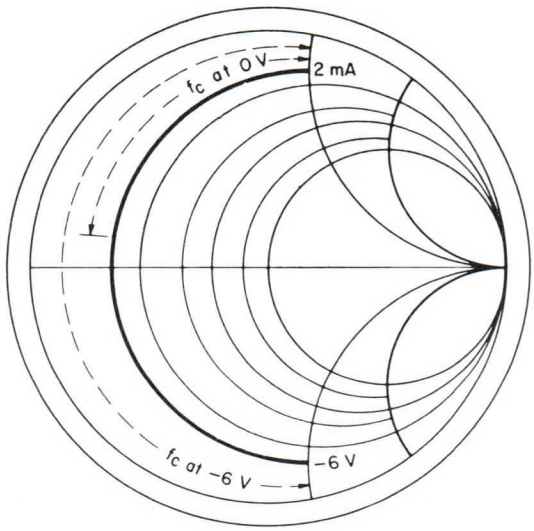

varian

TECHNICAL DATA

VAT-10, VAT-50, VAT-60, VAT-70, VAT-90
Series
CERAMIC PACKAGED TUNING DIODES

DESCRIPTION

This series of silicon tuning varactor diodes is manufactured by the unique PLESA* process. The planar-like method uses a thermal oxidation passivation and post diffusion with a mesa structure.

Each tuning diode has low leakage current and the high reliability of planar processing coupled with the excellent r-f characteristics of mesa geometry. Ultra-low leakage current over wide temperature ranges makes these diodes suitable for applications requiring good frequency or phase stability. The combination of large capacitance variation and low loss at microwave frequencies also makes these diodes ideal for full-band tuning up to X band, AFC, filter tuning, and cavity tuning. The outstanding production-lot uniformity of capacitance values and capacitance/voltage characteristics allows accurate tracking in multi-diode circuits.

These planar-passivated mesa diodes (PLESA), available in production quantities, have thermally-bonded contacts as well as welded hermetically-sealed cases. This sturdy construction produces reliable performance under the adverse environmental conditions required by military specifications.

PERFORMANCE CHARACTERISTICS[1]

Total Capacitance at -4 V Bias[2] (pF)				Minimum Q at -4 V[3]	Minimum Total Capacitance Tuning Ratio[2]	Maximum Leakage Current (nA)	Type Number[4]
A	B	C	D				
45-Volt Series[5]					C_{To}/C_{To-45}		
0.96-1.18	1.18-1.39	---	---	2000	3.5:1	15	VAT-91
1.39-1.60	1.60-1.81	---	---	2000	4.0:1	20	VAT-92
1.81-2.03	2.03-2.24	---	---	1800	4.5:1	30	VAT-93
2.24-2.45	2.45-2.66	2.66-3.09	3.09-3.51	1700	4.74:1	40	VAT-71
3.51-3.94	3.94-4.36	4.36-4.78	4.78-5.21	1700	4.9:1	50	VAT-72
5.21-5.63	5.63-6.06	6.06-6.48	6.48-6.91	1700	5.0:1	60	VAT-73
60-Volt Series[5]					C_{To}/C_{To-60}		
0.95-1.16	1.16-1.37	---	---	1500	4.0:1	15	VAT-61
1.37-1.57	1.57-1.78	---	---	1300	5.0:1	20	VAT-62
1.78-1.99	1.99-2.20	---	---	1300	5.25:1	30	VAT-63
2.20-2.41	2.41-2.62	2.62-3.03	3.03-3.45	1100	5.5:1	40	VAT-51
3.45-3.87	3.87-4.28	4.28-4.70	4.70-5.11	1000	6.0:1	50	VAT-52
5.11-5.53	5.53-5.94	5.94-6.36	6.36-6.78	1000	6.5:1	60	VAT-53
120-Volt Series[5]					C_{To}/C_{To-120}		
2.12-2.29	2.29-2.52	2.52-2.92	2.92-3.23	500	8.0:1	40	VAT-11
3.23-3.73	3.73-4.13	4.13-4.53	4.53-4.93	500	9.0:1	50	VAT-12
4.93-5.33	5.33-5.73	5.73-6.13	6.13-6.53	475	9.5:1	60	VAT-13

3653 3/77

*TM-Varian Trademark

Printed in U.S.A.

VAT-10, VAT-50, VAT-60, VAT-70, VAT-90

GENERAL CHARACTERISTICS[1]

ELECTRICAL

Reverse
Breakdown Voltages ..... 45/60/120 V
Leakage Current, max[6]
At 25° C ..... 30 nA
At 150° C ..... 2 μA
Capacitance/Temperature Coefficient, typ[7]
45-volt and 60-volt Series, typ.. 200 ppm/° C
120-volt Series, typ ..... 300 ppm/° C

PHYSICAL

Case Styles N9, N11, N16, N18, N20
Ambient Temperature Range
Operating ..... -65 to +175 °C
Storage ..... -85 to +200 °C

CHARACTERISTIC CURVES[1]

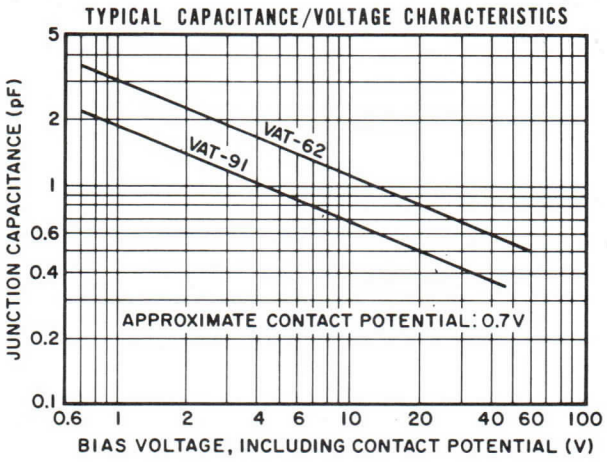

OUTLINE DRAWINGS

CASE STYLES[8]

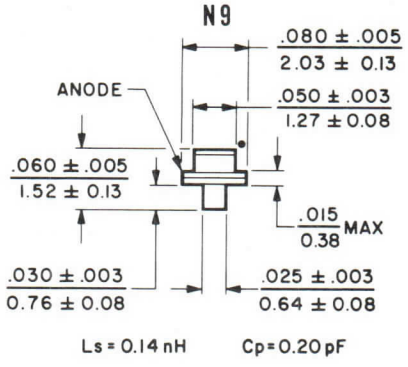

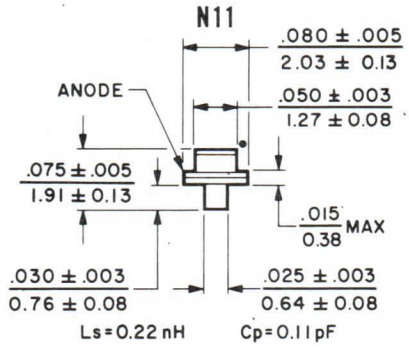

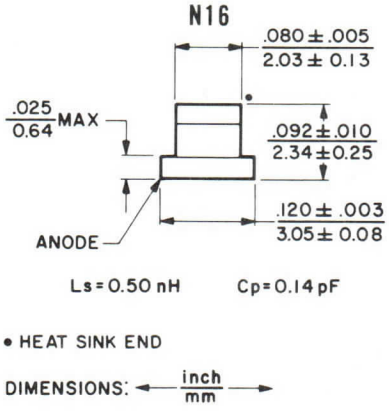

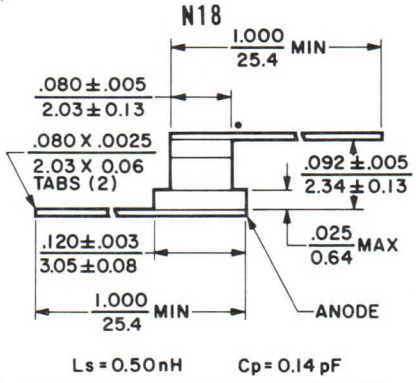

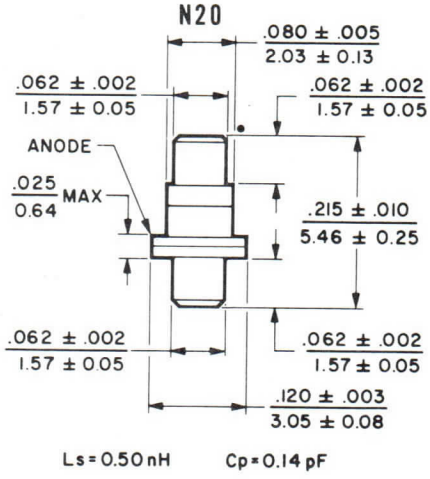

NOTES:

1. Characteristics and curves are based on performance tests. These values may change without notice as a result of additional data or product refinement. The Varian Beverly Division should be consulted before using these data for equipment design.
2. Includes case and internal fringing capacitances.
3. Q is calculated from the equation:

$$Q = \frac{1}{2 \pi f R_S C_j}$$

where

f = 50 MHz
R_S = Series resistance
C_j = Junction capacitance

R_S is measured at 1 GHz and -4 V bias using transmission loss technique. C_j is measured at 1 MHz on a Boonton bridge.

4. When ordering, specify the case style desired by adding the case designation as a suffix to the type number. Example: VAT-71N16
5. The series voltage designation indicates the minimum reverse breakdown voltage at -10 μA.
6. Measured with a reverse bias voltage equal to 80% of the minimum reverse breakdown voltage.
7. Averaged between -65 and +85° C. Capacitance/Temperature Coefficient is calculated in parts per million per degree Celsius (ppm/° C) from:

$$T_C \text{ Coef} = \frac{(C_T \text{ (at } 85^\circ C) - C_T \text{ (at } -65^\circ C)\ 10^3}{(85 + 65)\quad C_T \text{ (at } 25^\circ C)}$$

where

C_T = Sum of junction capacitance at -4 volts bias plus case capacitance at a given ambient temperature.

8. Case and lead inductance measured with 100 mA forward bias current and 1 GHz test frequency using a coaxial slotted line.

varian

TECHNICAL DATA

VAO
Series

IMPATT DIODES

4-26 GHz

DESCRIPTION

Varian VAO Series silicon IMPATT diodes are for use in fundamental frequency microwave oscillators operating between 4 and 26 gigahertz. Power levels from 10 to 500 milliwatts can be delivered for local oscillator and r-f power-source applications. Lower power versions are also available for use in alarm and police radar systems. These devices operate in the avalanche mode (i.e. — in the reverse bias condition, they are capable of converting d-c power directly into r-f power when mounted in a properly designed microwave cavity). Special care has been taken to assure good thermal conduction from the silicon chip.

GENERAL CHARACTERISTICS [1]

Operating Frequency (GHz)	R-F Output Power [2,3] (mW)	Typical Operating Voltage [4] (V)	Typical Operating Current (mA)	Typical Efficiency [2] (%)	Maximum Thermal Resistance [3,5,6] (°C/W)	Junction Capacitance [7] ±20% (pF)	Case Styles [8]	Type Number [9]
4.0-6.0	500	160	65	5.0	22	0.52	N19, N21	VAO-43H
6.0-8.0	10	100	13	0.8	100	0.14	N19, N20, N21, N22	VAO-31A
6.0-8.0	25	105	17	1.4	85	0.14	N19, N20, N21, N22	VAO-31B
6.0-8.0	50	100	18	2.8	70	0.24	N19, N20, N21, N22	VAO-32C
6.0-8.0	100	105	25	3.8	60	0.24	N19, N20, N21, N22	VAO-32D
6.0-8.0	200	110	33	5.5	50	0.24	N19, N20, N21, N22	VAO-32E
6.0-8.0	300	100	65	4.6	32	0.48	N19, N21	VAO-33F
6.0-8.0	400	105	71	5.4	28	0.48	N19, N21	VAO-33G
6.0-8.0	500	110	80	5.7	24	0.48	N19, N21	VAO-33H
8.0-10.0	300	83	78	4.7	32	0.60	N19, N21	VAO-13F1
8.0-10.0	400	89	84	5.4	28	0.60	N19, N21	VAO-13G1
8.0-10.0	500	103	85	5.7	24	0.60	N19, N21	VAO-13H1
8.0-12.4	10	85	15	0.8	100	0.20	N19, N20, N21, N22	VAO-11A
8.0-12.4	25	90	20	1.4	85	0.20	N19, N20, N21, N22	VAO-11B
8.0-12.4	50	70	25	3.0	70	0.35	N19, N20, N21, N22	VAO-12C
8.0-12.4	100	75	35	4.2	60	0.35	N19, N20, N21, N22	VAO-12D
8.0-12.4	200	80	45	5.5	50	0.35	N19, N20, N21, N22	VAO-12E
10.0-12.4	300	74	88	4.7	32	0.60	N19, N21	VAO-13F2
10.0-12.4	400	80	94	5.4	28	0.60	N19, N21	VAO-13G2
10.0-12.4	500	93	93	5.7	24	0.60	N19, N21	VAO-13H2
12.4-15.0	300	70	85	5.1	32	0.60	N19, N21	VAO-23F1
12.4-15.0	400	72	91	6.1	28	0.60	N19, N21	VAO-23G1
12.4-15.0	500	74	99	6.8	26	0.60	N19, N21	VAO-23H1
12.4-18.0	10	60	24	0.7	100	0.20	N19, N21	VAO-21A
12.4-18.0	25	63	26	1.5	85	0.20	N19, N21	VAO-21B
12.4-18.0	50	64	38	2.0	70	0.35	N19, N21	VAO-22C
12.4-18.0	100	65	46	3.4	60	0.35	N19, N21	VAO-22D
12.4-18.0	200	69	60	5.0	45	0.35	N19, N21	VAO-22E
15.0-18.0	300	65	92	5.1	32	0.60	N19, N21	VAO-23F2
15.0-18.0	400	66	101	6.1	28	0.60	N19, N21	VAO-23G2
15.0-18.0	500	67	110	6.8	26	0.60	N19, N21	VAO-23H2
18-23	100	53	100	2.0	38	0.63	N8	VAO-53D1
18-23	200	56	135	2.6	32	0.63	N8	VAO-53E1
18-23	300	57	150	3.5	28	0.63	N8	VAO-53F1
23-26	100	53	110	1.8	38	0.61	N8	VAO-53D2

3634 2/77

Printed in U.S.A.

RF POWER MEASUREMENT [2]

This test arrangement gives a measure of the r-f power capability of these diodes. In making power measurements, the slide-screw tuner is adjusted to give a maximum power reading on a Hewlett-Packard Model 413C Power Meter and a minimum noise level indication on the Spectrum Analyzer. The diode is biased with a d-c constant-current supply.

A low-Q cavity, which provides good heat sinking of the diode, is used for the r-f power measurement. Complete details relating to the construction of the test fixture and the method of testing these diodes, can be obtained from the Varian Beverly Division, Beverly, Massachusetts.

TEST CIRCUIT

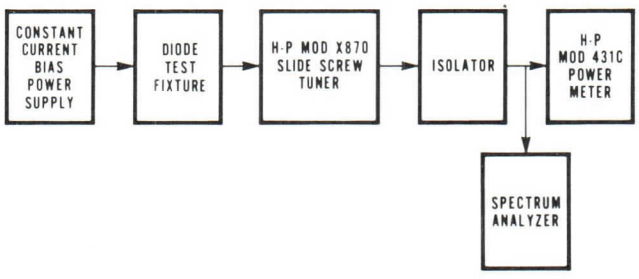

NOTES:

1. Characteristic and operating values are based on performance tests. These figures may change without notice as a result of additional data or product refinement. Consult the Varian Beverly Division before using this information for final equipment design.
2. R-f power output and efficiency are measured in a Varian broadband cavity having a nominal Q of 20. Details of the appropriate r-f test cavity can be furnished on request.
3. Based on a heat-sink temperature of 25° C with the diode soldered into the heat sink.
4. Constant current bias power supply must be regulated within 1%. Poor regulation may cause excessive noise and diode burn-out. Output impedance of the bias supply must be greater than 300 ohms from dc to 1 MHz.
5. Measured by the incremental-voltage method in the avalanche condition. Maximum junction temperature is 275°C.
6. Measured value of space-charge resistance, Rsp, is furnished with each diode. From this value, the actual thermal resistance of an individual diode can be determined for any circuit mounting arrangement.
7. Measured at 80% of breakdown voltage using a 1 MHz bridge. Breakdown voltage is measured at I_R = 1 mA. Diodes can be supplied to tighter tolerances.
8. Performance guaranteed only in case styles listed.
9. When ordering, specify the case style by adding the case designation as a suffix. Example: VAO-53E1N8.

OUTLINE DRAWINGS

CASE STYLES

N8

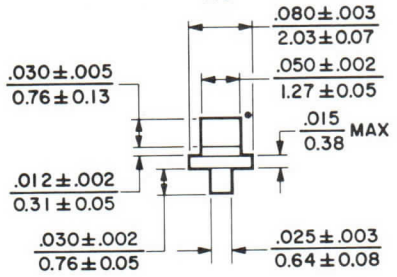

Ls=0.10 nH Cp=0.30 pF

N19

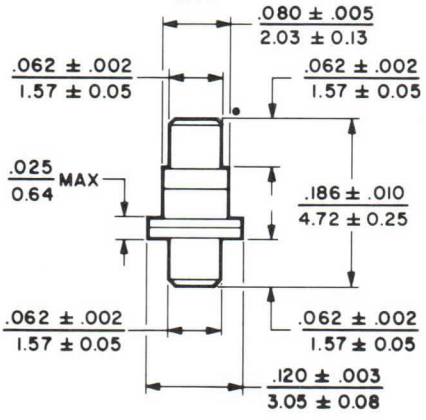

Ls=0.40 nH Cp=0.25 pF

N20

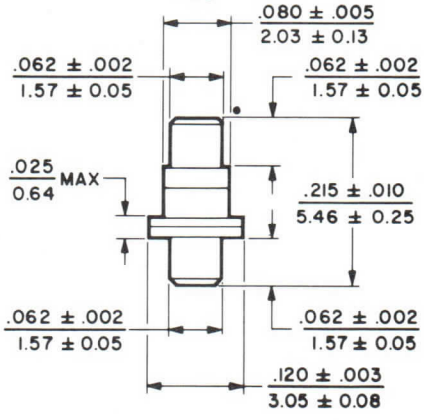

Ls=0.50 nH Cp=0.14 pF

N21

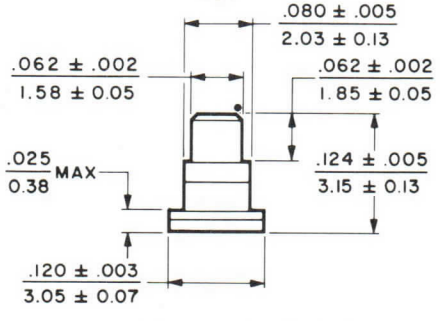

Ls=0.40 nH Cp=0.25 pF

• ANODE AND HEAT SINK END

DIMENSIONS: ← inch / mm →

N22

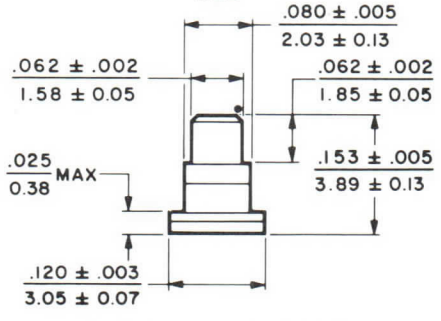

Ls=0.50 nH Cp=0.14 pF

varian

TECHNICAL DATA

VAT-110, VAT-130 VAT-140, VAT-160

Series

GALLIUM ARSENIDE TUNING DIODES

VHF-60 GHz

DESCRIPTION

Varian gallium-arsenide (GaAs) tuning diodes feature liquid-phase, epitaxially-grown, abrupt PN junctions to provide exceptionally high tuning ratios. High electron mobility produces very low series resistance which results in very high Q and low loss at microwave frequencies. Applications include wide tuning range VHF and UHF oscillators, broad tuning range filters, high-stability oscillators, and tuning of microwave transistor oscillators. These diodes are ideal for tuning Gunn and Impatt Oscillators operating at center frequencies from VHF to 60 gigahertz.

Before a wafer is committed to production use, 20 diodes are assembled and evaluated for Q, capacitance, voltage breakdown and reverse leakage. Each diode is operated in an oven for 48 hours at a temperature of 125°C and biased at 80% of the breakdown voltage. Data from each diode is carefully reviewed to verify that it is stable and meets all electrical parameters.

All production diodes are subjected to the same tests plus gross and fine leakage tests.

FEATURES

- High cutoff frequency
- Very low series resistance
- Low reverse leakage current
- Operation from VHF to 60 GHz
- Wide choice of capacitance
- Controlled capacitance/voltage characteristics
- Multiple-lead internal construction to minimize series inductance
- Wide selection of case styles

GENERAL CHARACTERISTICS [1]

Total Capacitance[2,3] at 0 V Bias (pF)	Minimum[4,5] Q		Minimum Total Capacitance Tuning Ratio[3] $C_{T(0)}/C_{T(Vb)}$	Typical Capacitance Temperature Coefficient[6] (ppm/°C)	Type Number[7]
	at 50 MHz	at 1 GHz			
15-Volt Series (Vb at -10 μA is -15 V min)					
0.5-1	5000	250	2.2:1	200	VAT-110
0.5-1	6500	325	2.2:1	200	VAT-110A
0.5-1	8000	400	2.2:1	200	VAT-110B
0.5-1	10,000	500	2.2:1	200	VAT-110C
1.0-2	5000	250	2.5:1	200	VAT-111
1.0-2	6000	300	2.5:1	200	VAT-111A
1.0-2	7000	350	2.5:1	200	VAT-111B
2.0-3	4000	200	2.9:1	200	VAT-112
2.0-3	5000	250	2.9:1	200	VAT-112A
2.0-3	6000	300	2.9:1	200	VAT-112B
3.0-4	3500	175	3.1:1	200	VAT-113
3.0-4	4000	200	3.1:1	200	VAT-113A
3.0-4	4500	225	3.1:1	200	VAT-113B
4.0-5	3500	175	3.2:1	200	VAT-114
4.0-5	4000	200	3.2:1	200	VAT-114A
4.0-5	4500	225	3.2:1	200	VAT-114B

3589 8/76

Printed in U.S.A.

GENERAL CHARACTERISTICS[1]

Total Capacitance[2,3] at 0 V Bias (pF)	Minimum[4,5] Q		Minimum Total Capacitance Tuning Ratio[3] $C_{T(0)}/C_{T(Vb)}$	Typical Capacitance Temperature Coefficient[6] (ppm/°C)	Type Number[7]
	at 50 MHz	at 1 GHz			
30-Volt Series (Vb at -10 μA is -30 V min)					
0.5-1	4000	200	2.4:1	200	VAT-130
0.5-1	6000	300	2.4:1	200	VAT-130A
0.5-1	7000	350	2.4:1	200	VAT-130B
1-2	4000	200	3.0:1	200	VAT-131
1-2	5500	275	3.0:1	200	VAT-131A
1-2	6500	325	3.0:1	200	VAT-131B
2-3	3500	175	3.6:1	200	VAT-132
2-3	4500	225	3.6:1	200	VAT-132A
2-3	5500	275	3.6:1	200	VAT-132B
3-4	3000	150	4.0:1	200	VAT-133
3-4	3500	175	4.0:1	200	VAT-133A
3-4	4000	200	4.0:1	200	VAT-133B
4-5	3000	150	4.2:1	200	VAT-134
4-5	3500	175	4.2:1	200	VAT-134A
4-5	4000	200	4.2:1	200	VAT-134B
5-6	3000	150	4.2:1	200	VAT-135
5-6	3500	175	4.2:1	200	VAT-135A
5-6	4000	200	4.2:1	200	VAT-135B
6-7	3000	150	4.2:1	200	VAT-136
6-7	3500	175	4.2:1	200	VAT-136A
6-7	4000	200	4.2:1	200	VAT-136B
7-8.5	3000	150	4.4:1	200	VAT-137
7-8.5	3500	175	4.4:1	200	VAT-137A
7-8.5	4000	200	4.4:1	200	VAT-137B
8.5-10	3000	150	4.4:1	200	VAT-138
8.5-10	3500	175	4.4:1	200	VAT-138A
8.5-10	4000	200	4.4:1	200	VAT-138B
45-Volt Series (Vb at -10 μA is -45 V min)					
0.5-1	4000	200	2.5:1	200	VAT-140
0.5-1	5500	275	2.5:1	200	VAT-140A
0.5-1	6500	325	2.5:1	200	VAT-140B
1-2	3500	175	3.3:1	200	VAT-141
1-2	5000	250	3.3:1	200	VAT-141A
1-2	6500	325	3.3:1	200	VAT-141B
2-3	3000	150	4.2:1	200	VAT-142
2-3	4000	200	4.2:1	200	VAT-142A
2-3	5000	250	4.2:1	200	VAT-142B
3-4	2500	125	4.6:1	200	VAT-143
3-4	3000	150	4.6:1	200	VAT-143A
3-4	3500	175	4.6:1	200	VAT-143B
4-5	2100	105	4.9:1	200	VAT-144
4-5	3000	150	4.9:1	200	VAT-144A
4-5	3500	175	4.9:1	200	VAT-144B

GENERAL CHARACTERISTICS[1]

Total Capacitance at 0 V Bias[2,3] (pF)	Minimum[4,5] Q		Minimum Total Capacitance Tuning Ratio[3] $C_{T(0)}/C_{T(Vb)}$	Typical Capacitance Temperature Coefficient[6] (ppm/°C)	Type Number[7]
	at 50 MHz	at 1 GHz			
45-Volt Series (Vb at -10 μA is -45 V min) (continued)					
5-6	2100	105	4.9:1	200	VAT-145
5-6	3000	150	4.9:1	200	VAT-145A
5-6	3500	175	4.9:1	200	VAT-145B
6-7	2100	105	4.9:1	200	VAT-146
6-7	3000	150	4.9:1	200	VAT-146A
6-7	3500	175	4.9:1	200	VAT-146B
7-8.5	2100	105	5.2:1	200	VAT-147
7-8.5	3000	150	5.2:1	200	VAT-147A
7-8.5	3500	175	5.2:1	200	VAT-147B
8.5-10	2100	105	5.2:1	200	VAT-148
8.5-10	3000	150	5.2:1	200	VAT-148A
8.5-10	3500	175	5.2:1	200	VAT-148B
60-Volt Series (Vb at -10 μA is -60 V min)					
0.5-1	3500	175	2.6:1	200	VAT-160
0.5-1	5000	250	2.6:1	200	VAT-160A
0.5-1	6000	300	2.6:1	200	VAT-160B
1-2	3000	150	3.5:1	200	VAT-161
1-2	4500	225	3.5:1	200	VAT-161A
1-2	5500	275	3.5:1	200	VAT-161B
2-3	2600	130	4.6:1	200	VAT-162
2-3	3500	175	4.6:1	200	VAT-162A
2-3	4500	225	4.6:1	200	VAT-162B
3-4	2000	100	5.0:1	200	VAT-163
3-4	2500	125	5.0:1	200	VAT-163A
3-4	3000	150	5.0:1	200	VAT-163B
4-5	2000	100	5.4:1	200	VAT-164
4-5	2500	125	5.4:1	200	VAT-164A
4-5	3000	150	5.4:1	200	VAT-164B
5-6	2000	100	5.4:1	200	VAT-165
5-6	2500	125	5.4:1	200	VAT-165A
5-6	3000	150	5.4:1	200	VAT-165B
6-7	2000	100	5.4:1	200	VAT-166
6-7	2500	125	5.4:1	200	VAT-166A
6-7	3000	150	5.4:1	200	VAT-166B
7-8.5	2000	100	5.7:1	200	VAT-167
7-8.5	2500	125	5.7:1	200	VAT-167A
7-8.5	3000	150	5.7:1	200	VAT-167B
8.5-10	2000	100	5.7:1	200	VAT-168
8.5-10	2500	125	5.7:1	200	VAT-168A
8.5-10	3000	150	5.7:1	200	VAT-168B

GENERAL CHARACTERISTICS [1]

ELECTRICAL

Package Style	Typical Package Capacitance (pF)	Typical Series Inductance (nH)
N9	0.14	0.14
N10, N12	0.14	0.14
N11, N13	0.11	0.22
N15, N19, N21	0.25	0.40
N16, N20, N22	0.18	0.50
N76, N77	0.08	0.10

ENVIRONMENTAL

Ambient Temperature Range

Operating ..... -55 to + 175 °C

Storage ..... -55 to + 200 °C

NOTES:

1. Characteristics are based on performance tests. These values may change without notice as a result of additional data or product refinement. Varian Solid State West Division should be consulted before using this information for final equipment design.

2. Available ±10 percent or ±0.1 pF, whichever is greater, at no extra cost. Diodes can be supplied with a total capacitance tolerance of ±5 percent or ±0.05 pF, whichever is greater, at a moderate increase in price. Diodes can be furnished at other tolerances on request.

3. Values are for diodes in an N11 case and include case and internal-fringing capacitances.

4. Q is calculated from the equation:

$$Q = \frac{1}{2 \pi f R_S C_j}$$

where

f = 50 MHz or 1 GHz
R_S = Series resistance
C_j = Junction capacitance

R_S is measured at >1 GHz and -4 V bias
C_j is measured at 1 MHz

See Figure 1 for Q test arrangement.

5. Higher Q diodes are available on special order.

6. Averaged between -65 and +85° C. Capacitance Temperature Coefficient is calculated in parts per million per degree Celsius (ppm/° C) from:

$$T_C \text{ Coeff} = \frac{\left[C_T \text{ (at } 85^\circ C) - C_T \text{ (at } -65^\circ C)\right] 10^6}{(85 + 65)\ C_T \text{ (at } 25^\circ C)}$$

where

C_T = Sum of junction capacitance at -4 volts bias plus case capacitance at a given ambient temperature.

7. When ordering, specify the case style desired by adding the case designation as a suffix to the type number. Other case styles can be furnished on special order.
Example: VAT-131N16

OUTLINE DRAWINGS

N9 & N10 Cases

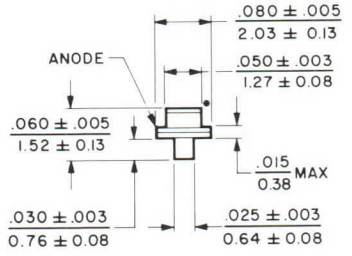

N11 Case

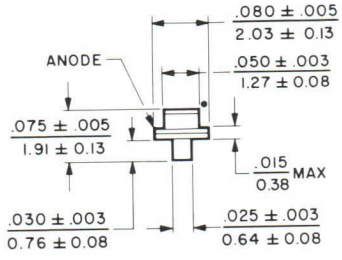

N12 Case

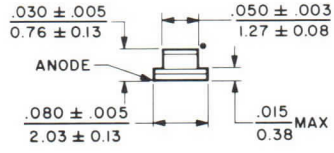

N13 Case

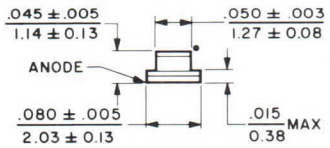

N15 Case

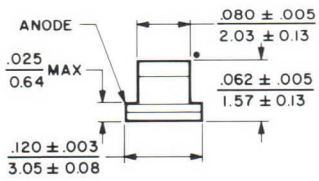

N16 Case

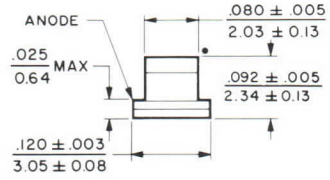

•HEAT SINK END

DIMENSIONS ← inch / mm →

OUTLINE DRAWINGS

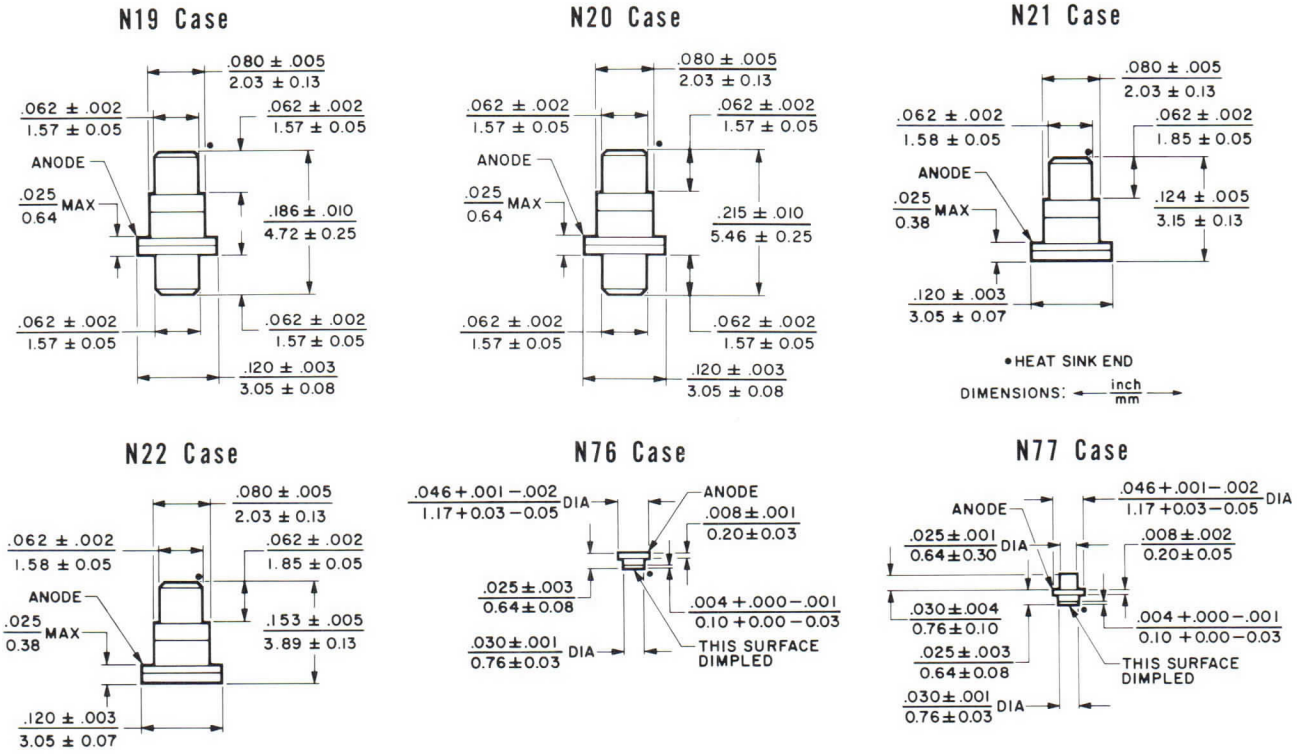

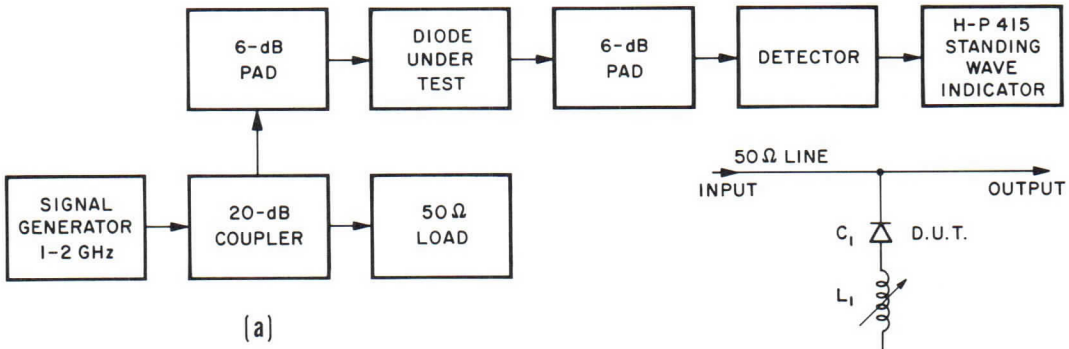

Figure 1 Circuit arrangement for determining the quality factor, Q, of a gallium arsenide tuning varactor. (a) block diagram of testing circuit; (b) equivalent circuit of the diode test fixture.

In determining Q, X_L is adjusted to equal X_C. The tuning diode capacitance and series inductor are series resonant at a frequency between 1 and 2 GHz. Figure 2 represents a swept display of a series-resonated tuning varactor connected in parallel with a 50 Ω line.

By selecting the appropriate measured attenuation value of the diode under test from Figure 2, the series resistance, R_S, can be read directly from the curve in Figure 3. Then, Q can be calculated by using the formula:

$$Q = \frac{1}{2 \pi f R_S C_j}$$

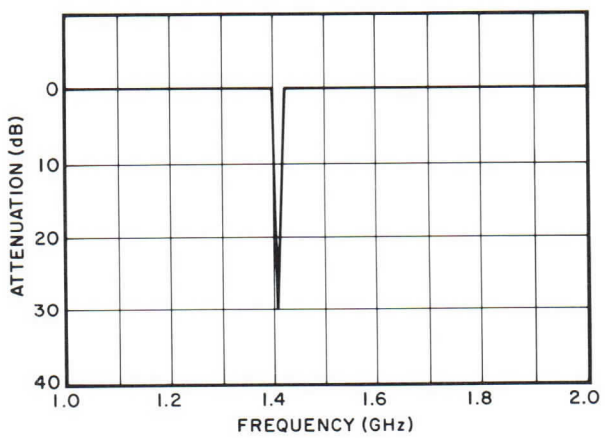

Figure 2 Typical attenuation variation with frequency of a varactor swept over the frequency range of 1 to 2 GHz.

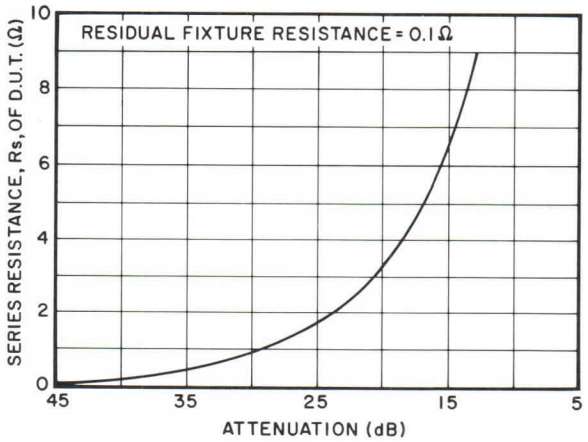

Figure 3 Series resistance as a function of attenuation of a GaAs tuning varactor in a 50-Ω line.

RELIABILITY

Varian gallium arsenide (GaAs) tuning varactors can be processed to meet the most stringent conditions occurring in shipboard, airborne, missile, and space environments.

Depending upon application requirements, Varian tuning varactors can be processed to meet all of the high-reliability screening tests listed below.

Varian GaAs Tuning Varactors are capable of meeting the following MIL-STD-750 Specification requirements under the test conditions noted.

Test	MIL-STD-750 Reference	Test Conditions
Steady State Operating Life	1026.1	1000 hours minimum operating time at maximum active layer temperature of 200°C
High Temperature Life	1031.1	1000 hours minimum storage time at 200°C
Physical Dimensions	2066	Device profile at 20X
Solderability	2026	Sn 60, Pb 40, solder at 230°C
Temperature Cycling	1051.1 Cond. B	5 cycles from -65°C to +175°C, 0.5 hour at extremes, 5 minute transfer
Thermal Shock	1056.1	5 cycles from 0°C to +175°C, 3 second transfer
Moisture Resistance	1021.1	10 days, 90-98% RH, -10°C to +65°C nonoperating
Shock	2016.1	5 blows each, X_1, Y_1, Y_2, 1500 G, 0.5 ms pulse
Vibration Fatigue	2046	32 ± 8 hours each X, Y, Z, 96 hour total, 60 Hz, 20 G min.
Vibration Variable Frequency	2056	Four 4-minute cycles each X, Y, Z, at 20 G min. 100 to 2000 Hz
Constant Acceleration	2006	1 minute each X_1, Y_1, Y_2, at 20,000 G
Terminal Strength	2036.1 Cond. B	Stud package — 2 pounds for 3 s, 120° apart
Salt Atmosphere	1041.1	35° fog for 24 hours

APPLICATION NOTES

Performance of a GaAs tuning varactor depends on the circuit in which it is used. The following information is a general guideline for engineers to use when designing a circuit using Varian gallium arsenide tuning varactors. Varian is continually developing more comprehensive and specific device characterization information to assist the user. Tuning varactor users are encouraged to consult Varian application engineering for additional help in incorporating these devices into their circuits or for providing varactors modified to meet special requirements.

REVERSE LEAKAGE VARIATION WITH TEMPERATURE

High reverse leakage in a tuning varactor can cause noise and reduce the Q of a diode. Varian gallium arsenide tuning varactors are believed to have the lowest absolute reverse leakage of any type of tuning diode.

Figure 4 shows typical reverse current characteristics of both gallium arsenide and silicon tuning varactors as a function of temperature.

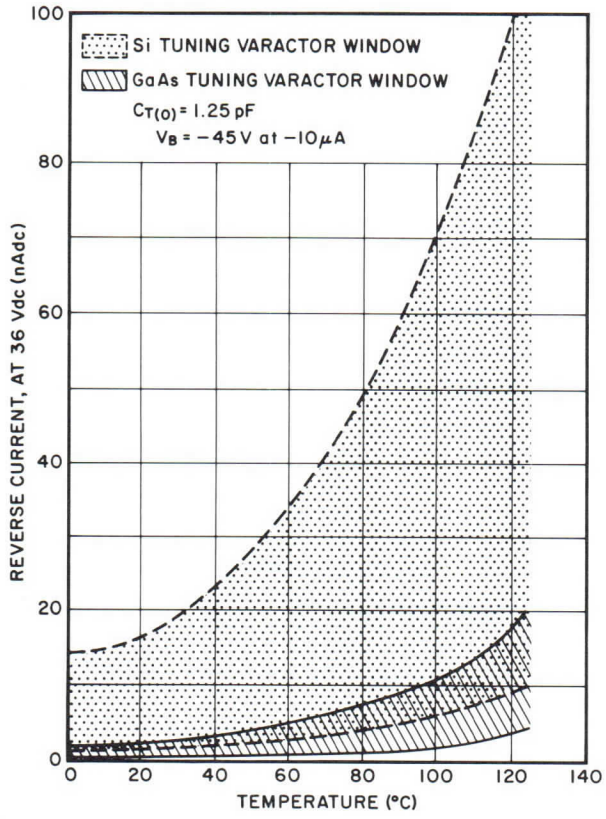

Figure 4 Typical reverse-current characteristics of GaAs and Si tuning varactors plotted against temperature.

QUALITY FACTOR – Q

As indicated earlier, the quality factor, Q, of a tuning varactor is determined from the formula:

$$Q = \frac{1}{2 \pi f R_S C_j}$$

where

f = 50 MHz or 1 GHz
R_S = Series resistance
C_j = Junction capacitance

R_S is measured at >1 GHz and -4 V bias
C_j is measured at 1 MHz

As can be seen in the formula, the lower the series resistance the higher the Q. Gallium arsenide inherently has the lowest series resistance per unit area of any presently known useable tuning varactor material. The very low series resistance of gallium arsenide tuning varactors and the resultant high Q produce excellent tuning characteristics in microwave circuits up through 60 GHz.

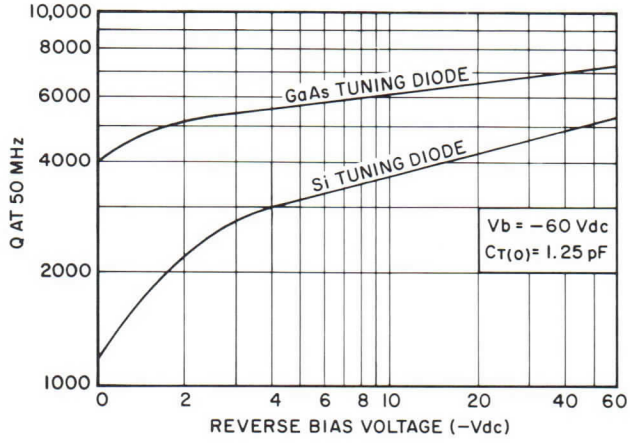

Figure 5 Typical Q variation with reverse voltage of GaAs and Si tuning varactors.

The absolute value of Q, and Q as a function of reverse bias voltage, see Figure 5, are critical parameters to the designer.

1. High Q results in lower loss in the microwave circuit. The lower loss is especially important in the design of high power oscillators for the following reasons:

   a. Tuning varactors are small signal devices and cannot dissipate large amounts of power; therefore, low loss means that a smaller amount of power will be dissipated in the varactor.

   b. Output power and efficiency of a microwave circuit are directly affected by the loss in the tuning varactor.

2. The change in Q due to variations in tuning voltage is also important.

   a. Output power from a microwave circuit changes as Q changes. This is important to the designer when output power must be maintained within a given window.

b. Because of the small change in Q that results from a reverse bias of -4 to 0 volts, see Figure 5, gallium arsenide may be used to 0 volts, where the r-f voltage drop across the diode is <1 volt. Approximately 1/2 the capacitance change in an abrupt junction tuning varactor occurs between a reverse bias of 0 and -4 volts. Hence, this capacitance value may be used in a gallium arsenide tuning varactor to achieve wider tuning bandwidth for the microwave circuit.

The gallium arsenide tuning varactor may also be used in a forward conduction mode if forward current is kept below <100 mA at 25°C on diodes with a total capacitance of <2 pF. Forward current may be increased to as much as 250 mA in higher capacitance diodes. To assure that the diode is within safe operating temperature limits, careful study should be made of the thermal impedance of the diode prior to approaching a forward current of 250 mA.

Capacitance tuning ratios greater than 10:1 have been achieved when operating GaAs tuning varactors between voltage breakdown and maximum safe forward conduction. Note that Q will drop as the diode goes into forward conduction but, if wide tuning bandwidth is required, Q degradation may be a reasonable trade-off.

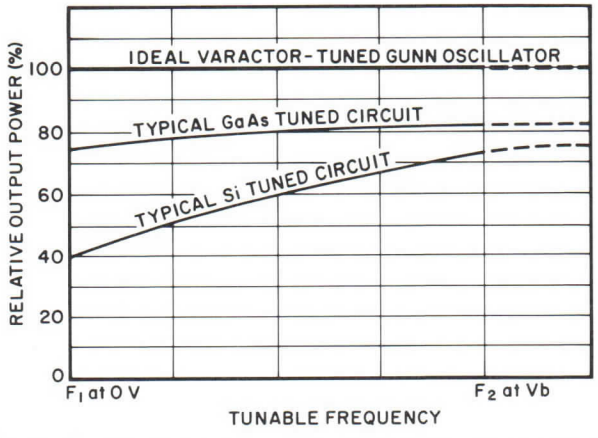

Figure 6 Typical power loss of X-band GaAs and Si tuning varactors over their tunable frequency range.

POWER FLATNESS IN AN OSCILLATOR

Power flatness in an oscillator is a direct function of change in varactor Q as well as other variables within the microwave circuit. Figure 6 compares the power change that can be expected from a typical Gunn oscillator using gallium arsenide tuning varactors and a circuit using silicon tuning varactors.

DESIGN CHECK LIST

Before designing a new oscillator, or other circuit, using tuning varactor diodes, the following criteria should be determined:

1. Circuit operating center frequency.
2. Electronic tuning bandwidth needed.
3. Capacitance change required to obtain the bandwidth determined in 2.
4. Amount of voltage available for biasing the tuning varactor.
5. Degree of output power flatness required and the permissible Q variation with reverse bias and temperature that will assure this desired output power flatness.
6. Calculate the highest available Q that meets the requirements of 1 through 5 above.
7. If the circuit is for a missile, aircraft or satellite application, what special environmental screening is required to assure reliable operation of the tuning varactor in the final application.
8. Select the diode case style (package) best suited to the circuit.

Varian engineers are eager to help you select the optimum gallium arsenide tuning varactor for your application.

varian

PRELIMINARY
TECHNICAL DATA

VSD-1000
Series

SILICON PIN DIODES

0.2-16.0 GHz

FEATURES

- PLESA contruction
- Excellent stability
- Low insertion loss
- High isolation
- Low contact resistance
- Outstanding uniformity of diodes within the same slice and consistent repeatability from slice to slice

DESCRIPTION

VSD-1000 Series silicon PIN diodes are designed specifically for use in applications where low insertion loss and high isolation are essential, such as switches, phase shifters, limiters (active), current-controlled attenuators and modulators. Efficient performance can be achieved over the broad frequency range of 0.2 to 16.0 gigahertz. The passivation technique used provides optimum integrity at the surface junction region. This series also offers the low thermal resistances needed for high-power applications.

GENERAL CHARACTERISTICS[1]

PERFORMANCE

Minimum Breakdown Voltage (V)	Junction Capacitance[2] ±20% (pF)	Maximum Resistance[3] Series (Ω)	Typical Minority Carrier Storage Time[4] (μs)	Maximum Thermal Resistance[5] (°C/W)	Case Styles[6]	Type Number[7]
1000	0.05	1.50	1.5	45	N16, N20, N26 N28, N29	VSD-1001
1000	0.10	1.25	1.5	30	N16, N20, N26 N28, N29	VSD-1002
1000	0.25	0.60	1.5	20	N26, N28, N29	VSD-1003
1000	0.50	0.50	1.5	15	N26, N28, N29	VSD-1004
1000	0.75	0.40	1.5	10	N26, N28, N29	VSD-1005
1000	1.00	0.25	1.5	5	N26, N28, N29	VSD-1006

ENVIRONMENTAL

Temperature Range
- Operating ..... -65 to +175 °C
- Storage ..... -85 to +300 °C

Short-Term Temperature
- 2 minutes* ..... 325 °C
- 30 seconds* ..... 350 °C

*VSD-1000 Series diode can be soldered to special customer-designed mounting fixtures. Degradation of diode characteristics may occur if the short term maximum temperatures are exceeded.

3635 1/77

Printed in U.S.A.

CHARACTERISTIC CURVE, Typical values

RF RESISTANCE VARIATION WITH BIAS CURRENT

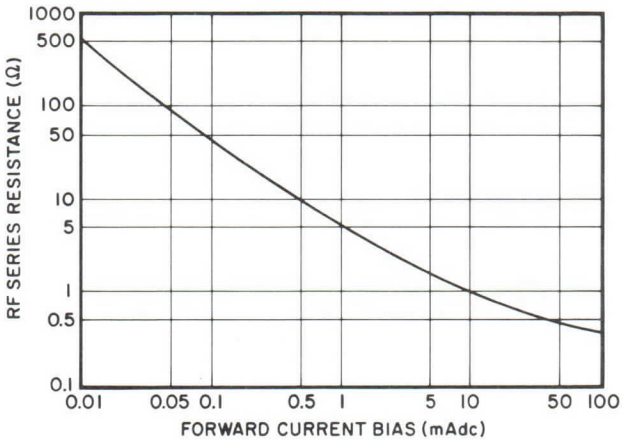

MINORITY CARRIER LIFETIME TEST CIRCUIT

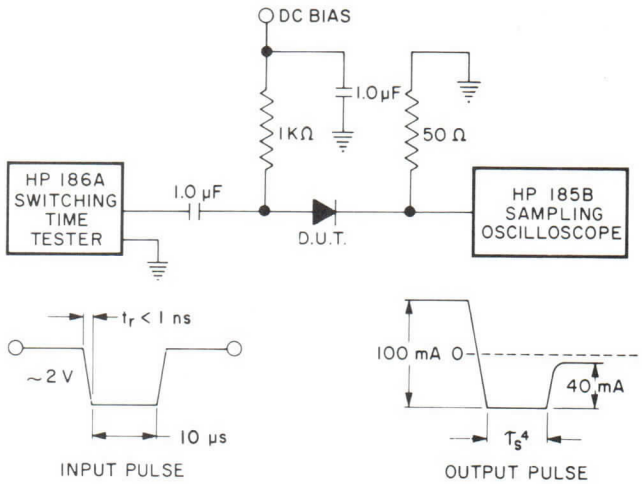

OUTLINE DRAWINGS
CASE STYLES

N16

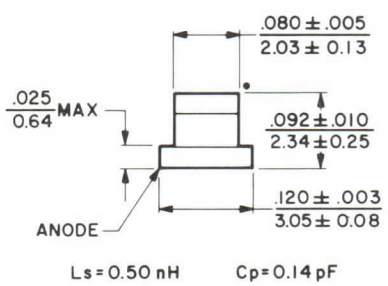

Ls = 0.50 nH Cp = 0.14 pF

N20

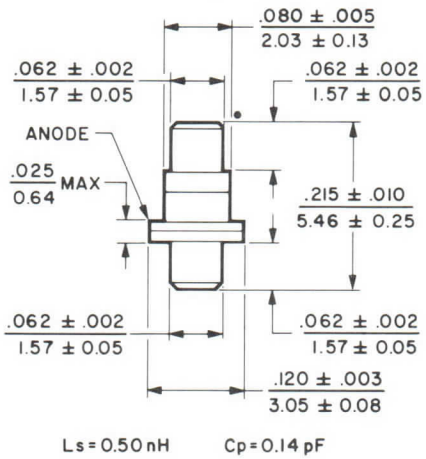

Ls = 0.50 nH Cp = 0.14 pF

N26

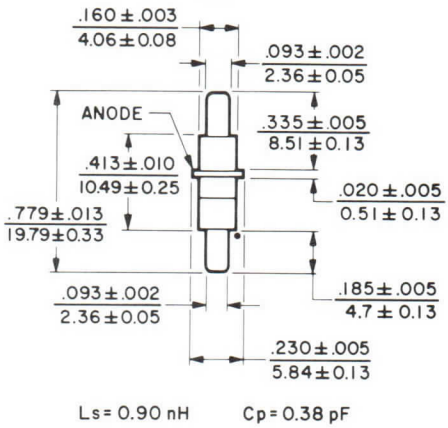

Ls = 0.90 nH Cp = 0.38 pF

N28

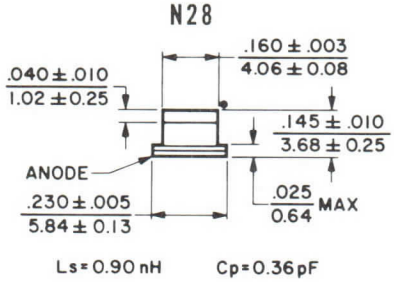

Ls = 0.90 nH Cp = 0.36 pF

•HEAT SINK END

DIMENSIONS: ← inch / mm →

N29

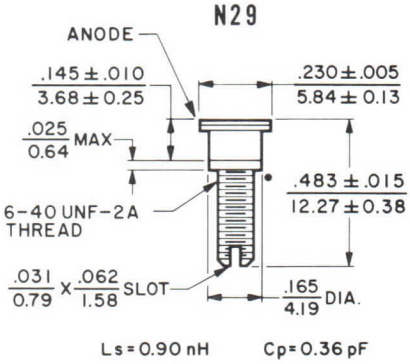

Ls = 0.90 nH Cp = 0.36 pF

NOTES:

1. Characteristic values are based on performance tests. These figures may change without notice as a result of additional data or product refinement. Consult the Varian Beverly Division before using this information for final equipment design.
2. Measured at bias voltage of -50 V.
3. Series resistance is measured at 100 mA and 1.0 GHz in a 50-ohm coaxial line with a 0.120-inch diameter center conductor.
4. Minority carrier storage time, τ_s, is measured directly at the test output using the test circuit above.
5. Value is for an infinite heat sink and 25° C ambient temperature.
6. Other case styles available on request.
7. When ordering, specify the case style desired by adding the case designation as a suffix to the type number.
   Example: VSD-1002N16

varian

PRELIMINARY
TECHNICAL DATA

VSD-C1000
Series

SILICON
PIN DIODE CHIPS

1-35 GHz

FEATURES

- PLESA construction
- Excellent stability
- Low insertion loss
- High isolation
- Pure gold contacts for bonding ease
- Outstanding uniformity of diodes within the same slice and consistent repeatability from slice to slice

DESCRIPTION

VSD-C1000 series silicon PIN switching diodes are chip versions of the VSD-1000 series for use in hybrid microwave circuits. They provide fast switching speeds, 1.5 microseconds, for r-f power control, without package capacitance or lead inductance which tend to limit bandwidth and upper frequency response. Depending on r-f power, efficient operation is achieved over the exceptionally wide frequency range of 1 to 35 gigahertz. Those chip diodes permit the circuit designer increased flexibility and control of matching circuitry for optimum circuit performance. For applications using large numbers of diodes, substantial cost savings can also be realized.

Each contact surface has a layer of pure gold for bonding purposes. Chip metallization withstands temperatures as high as 500° C, which is more than adequate for normal bonding and lead attachment. Although the preferred method of die bonding is by soldering with preforms such as AuGe, AuSn, or AuSi, conductive-epoxy or thermocompression bonding techniques may be employed. For best results, bonding should be performed in an inert atmosphere and the entire circuit sealed. The seal can vary from a simple dust seal to a full hermetic seal.

GENERAL CHARACTERISTICS [1,2]
PERFORMANCE

Minimum Voltage Breakdown (V)	Maximum Junction Capacitance[3] (pF)	Maximum Series Resistance[4] (Ω)	Typical Minority Carrier Storage Time[5] (μs)	Available Chip Sizes[6]		Type Number
				in	mm	
1000	0.05	1.50	1.5	.050	1.27	VSD-C1001
1000	0.10	1.25	1.5	.050	1.27	VSD-C1002
1000	0.25	0.60	1.5	.060	1.52	VSD-C1003
1000	0.50	0.50	1.5	.060	1.52	VSD-C1004
1000	0.75	0.40	1.5	.070	1.78	VSD-C1005
1000	1.00	0.25	1.5	.070	1.78	VSD-C1006

3636 2/77

Printed in U.S.A.

GENERAL CHARACTERISTICS[1]

ENVIRONMENTAL

Temperature Range

Operating	-65 to +175 °C
Storage	-85 to +300 °C

Short Term Temperature

2 minutes*	325 °C
30 seconds*	350 °C

*VSD-C1000 series chips can be soldered to special customer-designed mounting carriers. If the diode temperature is kept at or less than these ratings, no degradation of diode characteristics will occur.

CHARACTERISTIC CURVE

Typical performance values

VSD-C1004

RF RESISTANCE VARIATION WITH BIAS CURRENT

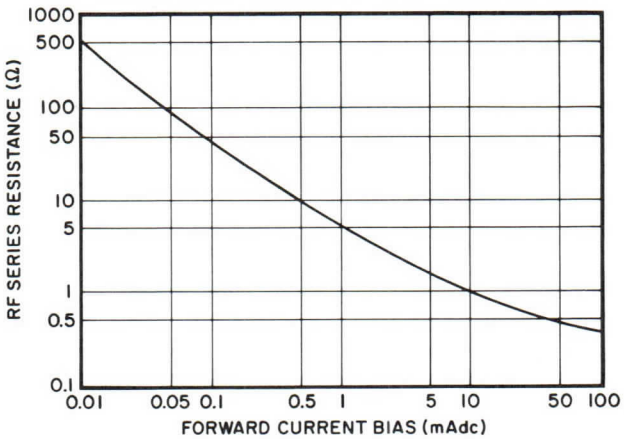

MINORITY CARRIER STORAGE TIME TEST CIRCUIT

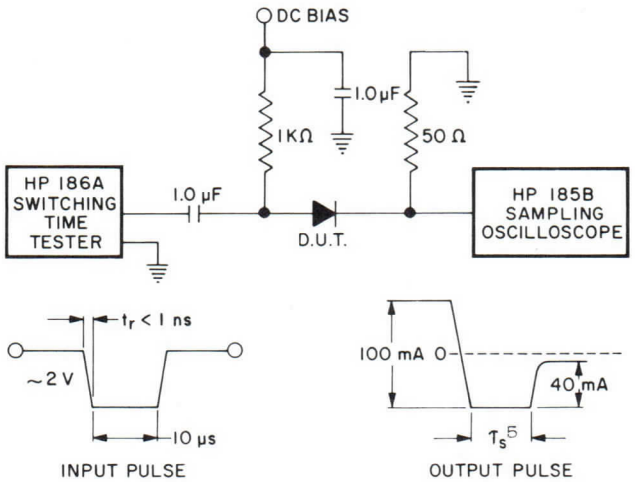

NOTES:

1. Characteristic values are based on performance tests. These figures may change without notice as a result of additional data or product refinement. Consult the Varian Beverly Division before using this information for final equipment design.
2. Breakdown voltage and junction capacitance are measured on a 100% basis. Series resistance and minority carrier storage time are measured on sample lots with the chips mounted in r-f packages.
3. Measured at a bias voltage of -50 V using a 1-MHz capacitance bridge.
4. Series resistance is measured at 100 mA and 1 GHz in a 50-ohm coaxial line with a 0.120-inch (3.05 mm) diameter center conductor.
5. Minority carrier storage time, τ_s, is measured directly at the test output using the test circuit shown in this data sheet.
6. These diode chips can be supplied as unmounted chips, or they can be mounted on custom-designed substrates, or on customer-specified carriers.

OUTLINE DRAWING

Typical values

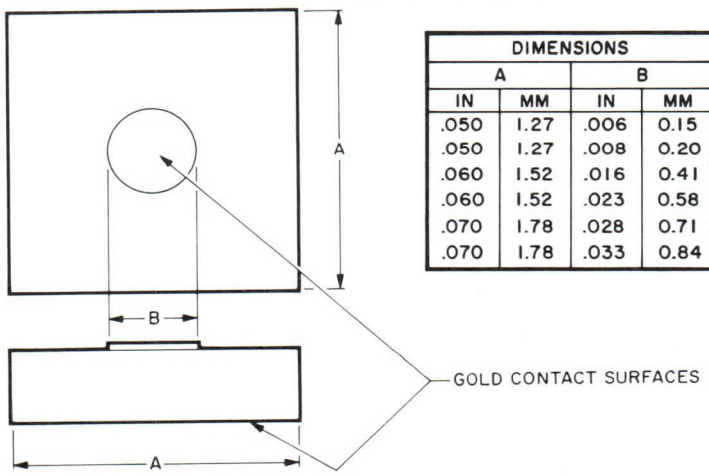

DIMENSIONS				TYPE NUMBER
A		B		
IN	MM	IN	MM	
.050	1.27	.006	0.15	VSD-C1001
.050	1.27	.008	0.20	VSD-C1002
.060	1.52	.016	0.41	VSD-C1003
.060	1.52	.023	0.58	VSD-C1004
.070	1.78	.028	0.71	VSD-C1005
.070	1.78	.033	0.84	VSD-C1006

varian
solid state west division

TECHNICAL DATA

VAP-200
Series

GALLIUM-ARSENIDE
PARAMP DIODES

DESCRIPTION

VAP-200 diodes are gallium-arsenide, GaAs, parametric-amplifier diodes which employ a unique liquid-phase epitaxial growth process to form their PN junctions. This type of PN junction allows close control of doping densities and epitaxial layer thickness yielding exceptionally uniform dynamic operating characteristics from lot to lot and superior reliability. These diodes provide extraordinary gain/bandwidth performance with low noise figure. All contacts are bonded or brazed and the final package is hermetically sealed, to meet the most demanding mechanical and environmental requirements. The wide choice of package style, series inductance, and case capacitance permits the paramp designer to optimize his design quickly.

GENERAL CHARACTERISTICS

Junction Capacitance[2,3] (pF)	Minimum Cutoff Frequency[4] (GHz)	Type Number[5]
0.2-0.3	150	VAP-201A
0.2-0.3	200	VAP-201B
0.2-0.3	250	VAP-201C
0.2-0.3	300	VAP-201D
0.2-0.3	350	VAP-201E
0.2-0.3	400	VAP-201F
0.2-0.3	450	VAP-201G
0.2-0.3	500	VAP-201H
0.3-0.4	150	VAP-202A
0.3-0.4	200	VAP-202B
0.3-0.4	250	VAP-202C
0.3-0.4	300	VAP-202D
0.3-0.4	350	VAP-202E
0.3-0.4	400	VAP-202F
0.3-0.4	450	VAP-202G
0.4-0.6	150	VAP-203A
0.4-0.6	200	VAP-203B
0.4-0.6	250	VAP-203C
0.4-0.6	300	VAP-203D
0.4-0.6	350	VAP-203E
0.4-0.6	400	VAP-203F
0.6-1.0	150	VAP-204A
0.6-1.0	200	VAP-204B
0.6-1.0	250	VAP-204C
0.6-1.0	300	VAP-204D

Reverse Breakdown Voltage, min .... 6.0 V
Power Dissipation, max ..... 250 mW
Operating Temperature .... +20°K to +175 °C
Storage Temperature ..... +20°K to +200 °C

PACKAGE PARASITICS

All microwave packages possess a parallel capacitance and a series inductance. Package capacitance values are given for the empty case and do not include internal fringing capacitance (amounting to 0.01 to 0.02 pF). Values are obtained by substitution of a package for an air gap, the length of which corresponds to the package height (excluding prongs). Inductance is measured at 1 GHz in a 50-ohm coaxial cavity whose inner conductor is 120 mils in diameter.

Parallel case capacitance is controlled to within 0.01 pF by preselection and sorting of empty cases. Inductance can be selected to within ±10% of the values shown by varying the internal contact structure. This selection capability and resultant control are especially advantageous when the end use involves fixed-tuned circuitry.

Package Style	Parallel Capacitance[6] (pF)	Typical Series Inductance (nH)
N9	0.17-0.20	0.10
N10, N12	0.17-0.20	0.11
N11, N13	0.08-0.12	0.22
N15, N19, N21	0.22-0.27	0.30
N16, N20, N22	0.12-0.16	0.40
N76, N77	0.08-0.11	0.10

3192 4/74

Printed in U.S.A.

OUTLINE DRAWINGS

N9 & N10 Cases

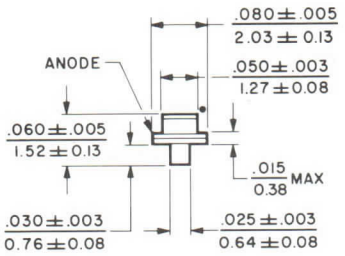

N11 Case

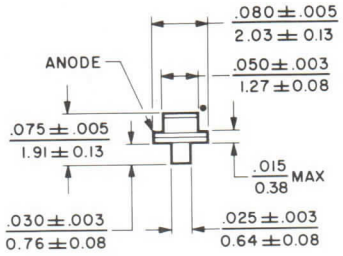

N12 Case

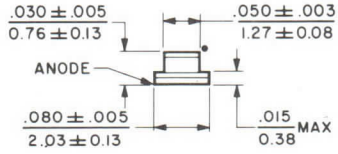

N13 Case

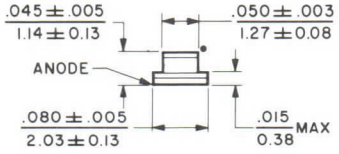

N15 Case

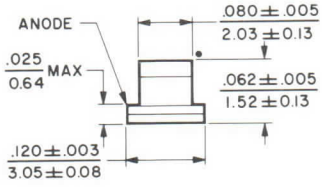

N16 Case

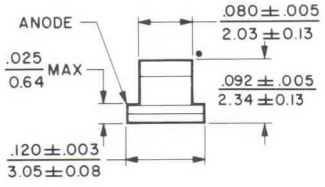

N19 Case

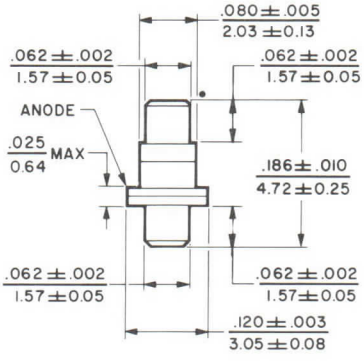

N20 Case

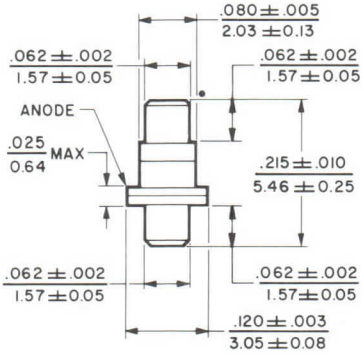

N21 Case

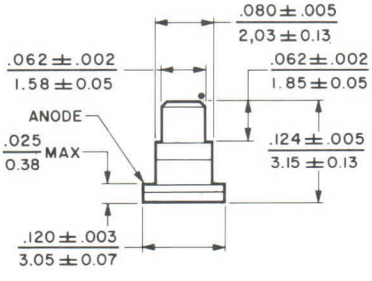

N22 Case

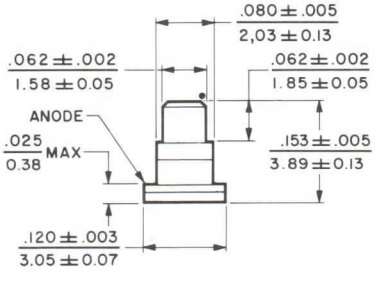

N76 Case

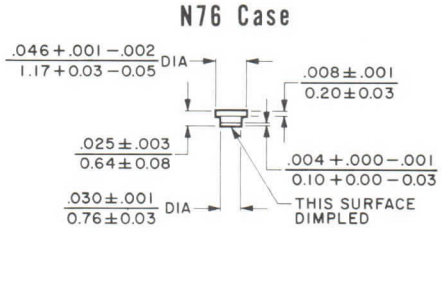

N77 Case

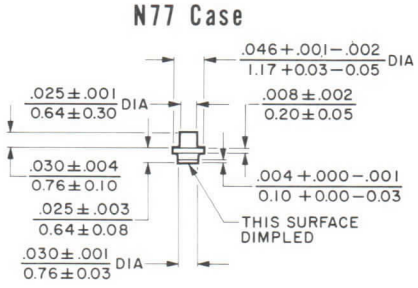

DIMENSIONS ← inch / mm →

•HEAT SINK END

NOTES:

1. Characteristic values are based on performance tests. These figures may change without notice as the result of additional data or product refinement. Contact the Varian Solid State West Division, Palo Alto, California before using this information for final equipment design.

2. Measured at 6 V using a 1-MHz capacitance bridge. Value does not include case capacitance.

3. Tolerance can be specified to ± 10% or ± 0.05 pF, whichever is greater. A tolerance of ± 0.02 pF can be supplied at additional cost.

4. Measured between 2 mA and -6 V at 10 GHz using a computer-aided Smith Impedance Plot Method. Higher cutoff frequencies can be furnished on special order but with restricted package availability.

5. When ordering, specify case style desired by adding the appropriate suffix to the type number. Example: VAP-201AN9. Case styles other than those shown can be supplied upon request.

6. Can be controlled to within ± 0.01 pF of any specified value within the range for a particular package style.

Typical Smith Chart Plot

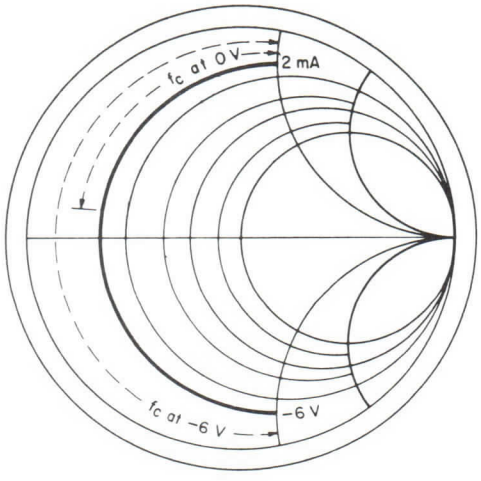

varian

TECHNICAL DATA

9250
Series
GaAs HI-LOW PROFILE
CW IMPATT DIODES
6-15 GHz
5 W, CW

FEATURES

- High CW output — 5 W at 7 GHz
  4 W at 9 GHz
  3 W at 11 GHz
  2 W at 14 GHz
- High efficiency — typically 20%
- Burnout resistant to circuit mismatches
- High reliability

DESCRIPTION

Varian 9250 diodes are hi-low profile, gallium-arsenide (GaAs), CW IMPATT diodes. They are ideal for use as oscillators and amplifiers in communication and radar systems. Rugged, reliable diode construction is assured by using a plated-heatsink, high-temperature metallization process on $P^+N^+N^-N^+$ gallium arsenide.

OUTLINE DRAWINGS

CASE STYLES

N33

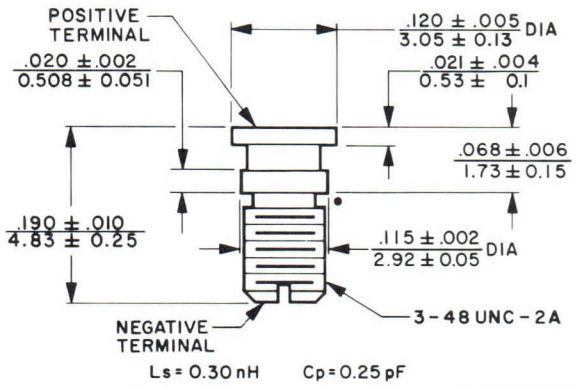

N57

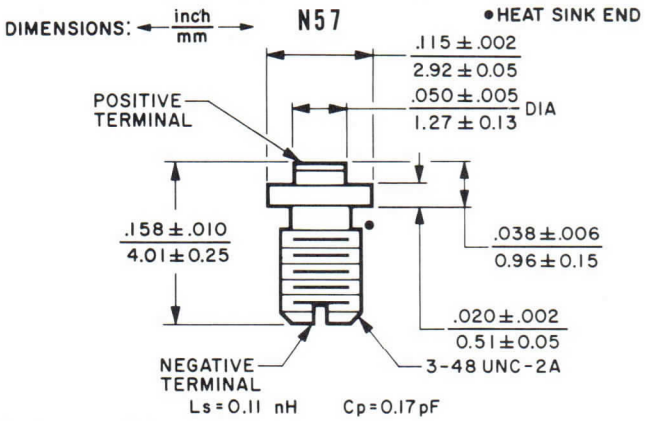

GENERAL CHARACTERISTICS

RF PERFORMANCE [1,2]

Frequency Range (GHz)	Minimum Ouput, P_O (W)	Minimum Efficiency, η (%)	Typical Operating Voltage, V_O (Vdc)	Typical Operating Current, I_O (mAdc)	Typical Breakdown Voltage, V_B [3] (Vdc)	Typical Junction Capacitance, C_j [4] (pF)	Typical Thermal Resistance, θ_T [5] (°C/W)	Type Number
6-8	3.75	15	60	420	40	1.9	10	VSC-9250S37-N33
6-8	5	20	60	420	40	1.9	10	VSC-9250S57-N33
8-10	3	15	50	400	30	2.2	11	VSX-9250S39-N57
8-10	4	20	50	400	30	2.2	11	VSX-9250S49-N57
10-12	2.25	15	45	330	25	1.8	14	VSX-9250S211-N57
10-12	3	20	45	330	25	1.8	14	VSX-9250S311-N57
12-15	1.45	13	35	320	20	1.7	18	VSU-9250S114-N57
12-15	2	18	35	320	20	1.7	18	VSU-9250S214-N57

3752 10/77

Printed in U.S.A.

ABSOLUTE RATINGS[6]

	Min	Max
Junction Operating Temperature	-65	225 °C
Storage Temperature	-65	225 °C
Soldering Temperature, for 5 seconds maximum	---	230 °C
Power Dissipation	---	$\frac{(225-T_A)°C}{\theta_T}$ W

NOTES:

1. RF performance values are based on tests performed in an ambient temperature of 25° C. These figures may change without notice as a result of additional data or product refinement. Consult the Varian Solid State West Division before using this information for final equipment design.

2. Each diode is tested near the center of its frequency range in a fixed-tuned cavity and with a maximum temperature rise of 200° C.

3. Breakdown voltage is measured with an I_R of 1 mA.

4. Junction capacitance is measured with a V_R of V_B-1.

5. Thermal resistance is measured using the Haitz method.

6. Ratings should not be exceeded under continuous or transient conditions. A single rating may be the limitation and simultaneous operation at more than one rating may damage the device. Equipment design should limit voltage and environmental variations so that the ratings will never be exceeded.

varian

TECHNICAL DATA

9251
Series
GALLIUM ARSENIDE
PULSED IMPATT DIODES
8-15 GHz
15 W, peak

FEATURES

- High peak output - 15 W at 9 GHz
  14 W at 11 GHz
  10 W at 14 GHz
- High efficiency - typically 20%
- Burnout resistant to circuit mismatches
- High reliability
- High duty cycle operation

OUTLINE DRAWING

CASE N57

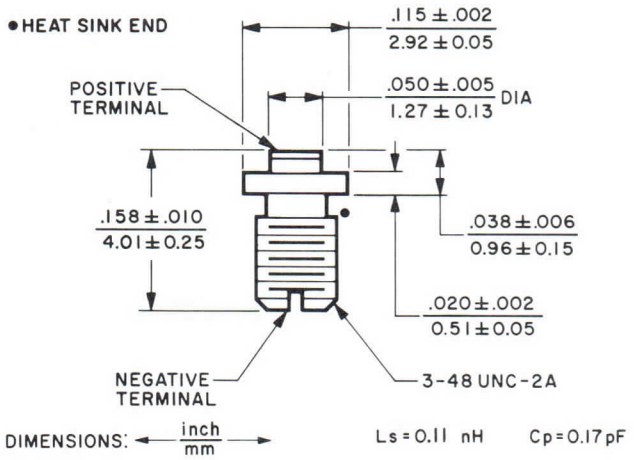

DESCRIPTION

Varian 9251 diodes are hi-low profile, gallium-arsenide (GaAs) single drift pulsed IMPATT diodes. They are ideal for use as transmitter oscillators in radar and active missile seekers. Rugged, reliable diode construction is assured by using a grown hi-low doping profile with a high-temperature metallization process on $P^+N^+N^-N^+$ gallium arsenide.

ABSOLUTE RATINGS [1]

	Min	Max	
Junction Operating Temperature	-65	225	°C
Storage Temperature	-65	225	°C
Soldering Temperature, for 5 seconds maximum	---	230	°C
Power Dissipation	---	$\frac{(225-T_A)^\circ C}{\theta_T}$	W

GENERAL CHARACTERISTICS

RF PERFORMANCE [2,3]

Frequency Range (GHz)	Minimum Peak Output P_o (W)	Minimum Efficiency η (%)	Typical Peak Voltage, V_o (V)	Typical Peak Current, I_o (A)	Typical Breakdown Voltage[4], V_B (V)	Typical Junction Capacitance[5], C_j (pF)	Typical Thermal Resistance[6], θ_T (°C/W)	Type Number[7]
8-10	10	13	60	1.4	40	3.0	11	VSX-9251S1009-N57
8-10	15	18	60	1.4	40	3.0	11	VSX-9251S1509-N57
10-12	10	13	55	1.4	35	3.4	12	VSX-9251S1011-N57
10-12	14	18	55	1.4	35	3.4	12	VSX-9251S1411-N57
12-15	7	13	45	1.2	30	3.1	17	VSU-9251S0714-N57
12-15	10	18	45	1.2	30	3.1	17	VSU-9251S1014-N57

3753 11/77

Printed in U.S.A.

NOTES:

1. Ratings should not be exceeded under continuous or transient conditions. A single rating may be the limitation and simultaneous operation at more than one rating may damage the device. Equipment design should limit voltage and environmental variations so that the ratings will never be exceeded.

2. RF performance values are based on tests performed in an ambient temperature of 25° C. These figures may change without notice as a result of additional data or product refinement. Consult the Varian Solid State West Division before using this information for final equipment design.

3. The diodes are tested in a fixed tuned oscillator near the center of its frequency range. Pulse width is 1 μs at 25% duty cycle with a maximum average junction temperature rise of 200° C.

4. Breakdown voltage is measured with an I_R of 1 mA.

5. Junction capacitance is measured with a V_R of V_B-1.

6. Thermal resistance is measured using the Haitz method.

7. These devices are standard parts which are available from stock. Packages and units manufactured to special customer specifications are available upon request.

varian

TECHNICAL DATA

VAT-200
Series

HIGH-Q
CERAMIC PACKAGED
TUNING VARACTORS

FEATURES

- PLESA passivation
- Ultra-low leakage current
- High Q — to 4000
- High temperature operation
- Controlled capacitance/voltage characteristic

DESCRIPTION

VAT-200 Series high-Q PLESA tuning varactors are silicon diodes specially processed to obtain the benefits from both planar and mesa methods. The unique PLESA passivation allows planar processing to be applied to surfaces containing silicon mesas.

These diodes have the excellent r-f characteristics of mesa geometry. The extremely high Q permits satisfactory operation at high microwave frequencies and allows tuning over the wide bandwidths needed in applications such as broadband tunable filters and high-Q cavities. Especially low leakage currents over wide temperature ranges together with good leakage-current stability provide the frequency and/or phase stability required by the most frequency-stable or broadband tunable transistor, Impatt, or Gunn-effect oscillators. The high production-lot uniformity of the capacitance/voltage characteristic makes these devices ideal for use in phased-array systems or in sensitive multiple filters and modules.

GENERAL CHARACTERISTICS[1]
PERFORMANCE

Total Capacitance at -4 V Bias[2] (pF)				Minimum Q at -4 V[3]	Minimum Total Capacitance Tuning Ratio[2]	Maximum Leakage Current (nA)	Type Number[4]
A	B	C	D				
30-Volt Series[5]					$C_{T\,0}/C_{T\,0\text{-}30}$		
0.45-0.65	0.65-0.83	0.83-1.01	----	4000	3.0:1	10	VAT-230
0.01-1.23	1.23-1.46	----	----	3500	3.5:1	15	VAT-231
1.46-1.68	1.68-1.91	----	----	3300	3.75:1	20	VAT-232
1.91-2.13	2.13-2.36	----	----	3000	3.9:1	30	VAT-233
2.36-2.58	2.58-2.81	2.81-3.26	3.26-3.71	2700	4.1:1	40	VAT-234
3.71-4.16	4.16-4.60	4.60-5.05	5.05-5.50	2500	4.2:1	50	VAT-235
5.50-5.95	5.95-6.40	6.40-6.85	6.85-7.30	2500	4.3:1	60	VAT-236
45-Volt Series[5]					$C_{T\,0}/C_{T\,0\text{-}45}$		
0.45-0.62	0.62-0.80	0.80-0.96	----	3500	3.3:1	10	VAT-290
0.96-1.18	1.18-1.39	----	----	2600	3.5:1	15	VAT-291
1.39-1.60	1.60-1.81	----	----	2400	4.0:1	20	VAT-292
1.81-2.03	2.03-2.24	----	----	2100	4.5:1	30	VAT-293
2.24-2.45	2.45-2.66	2.66-3.09	3.09-3.51	2000	4.75:1	40	VAT-271
3.51-3.94	3.94-4.36	4.36-4.78	4.78-5.21	1900	4.9:1	50	VAT-272
5.21-5.63	5.63-6.06	6.06-6.48	6.48-6.91	1900	5.0:1	60	VAT-273
60-Volt Series[5]					$C_{T\,0}/C_{T\,0\text{-}60}$		
0.45-0.62	0.62-0.78	0.78-0.95	----	2500	3.7:1	10	VAT-260
0.95-1.16	1.16-1.37	----	----	2000	4.0:1	15	VAT-261
1.37-1.57	1.57-1.78	----	----	1800	5.0:1	20	VAT-262
1.78-1.99	1.99-2.20	----	----	1700	5.25:1	30	VAT-263
2.20-2.41	2.41-2.62	2.62-3.03	3.03-3.45	1500	5.5:1	40	VAT-251
3.45-3.87	3.87-4.28	4.28-4.70	4.70-5.11	1400	6.0:1	50	VAT-252
5.11-5.53	5.53-5.94	5.94-6.36	6.36-6.78	1300	6.0:1	60	VAT-253

3654 3/77

Printed in U.S.A.

GENERAL CHARACTERISTICS[1]

ELECTRICAL

Reverse Breakdown Voltages .... 30/45/60 V

Leakage Current, typical[6]

At 25°C ..... 5 nA

At 150°C ..... 500 nA

Capacitance/Temperature Coefficient, typical[7] ..... 200 ppm/°C

PHYSICAL

Case Styles N16, N18, N20, N22

Ambient Temperature Range

Operating ..... -55 to +175 °C

Storage ..... -55 to +200 °C

CHARACTERISTIC CURVES[1]

TYPICAL CAPACITANCE/VOLTAGE CHARACTERISTICS

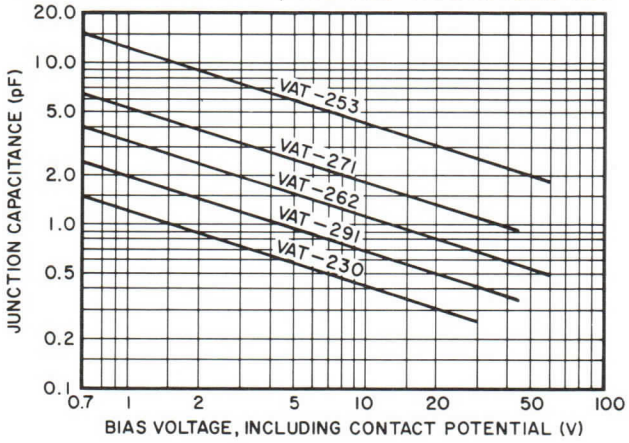

NOTES:

1. Characteristics and curves are based on performance tests. These values may change without notice as a result of additional data or product refinement. Varian Beverly Division should be consulted before using these data for-equipment design.
2. Includes case and internal fringing capacitances.
3. Q is calculated from the equation:

$$Q = \frac{1}{2 \pi f R_S C_j}$$

where

f = 50 MHz

R_S = Series resistance

C_j = Junction capacitance

R_S is measured at 1 GHz and -4 V bias using transmission loss technique. C_j is measured at 1 MHz on a Boonton bridge.

4. When ordering, specify the case style desired by adding the case designation as a suffix to the type number:

Example: VAT-271N16

Other case styles can be furnished on special order.

5. The series voltage designation indicates the minimum reverse breakdown voltage at -10 μA.
6. Measured with a reverse bias voltage equal to 80% of the minimum reverse breakdown voltage.
7. Averaged between -65 and +85°C. Capacitance/Temperature Coefficient is calculated in parts per million per degree Celsius (ppm/°C) from:

$$T_C \text{ Coeff} = \frac{C_T \text{ (at } 85^\circ\text{C)} - C_T \text{ (at } -65^\circ\text{C)} \quad 10^6}{(85 + 65) \quad C_T \text{ (at } 25^\circ\text{C)}}$$

where

C_T = Sum of junction capacitance at -4 volts bias plus case capacitance at a given ambient temperature.

8. Lead inductance measured with 100 mA forward bias current and 1 GHz test frequency using a coaxial slotted line.

OUTLINE DRAWINGS

CASE STYLES[8]

N16

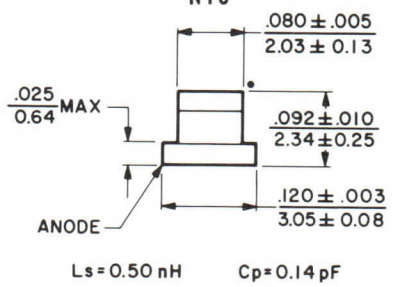

Ls = 0.50 nH Cp = 0.14 pF

N18

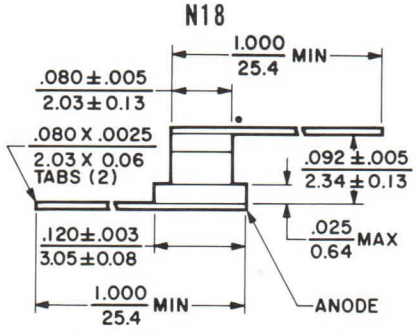

Ls = 0.50 nH Cp = 0.14 pF

ALSO AVAILABLE WITH SINGLE TAB OR DOUBLE TABS IN H OR U CONFIGURATION

N20

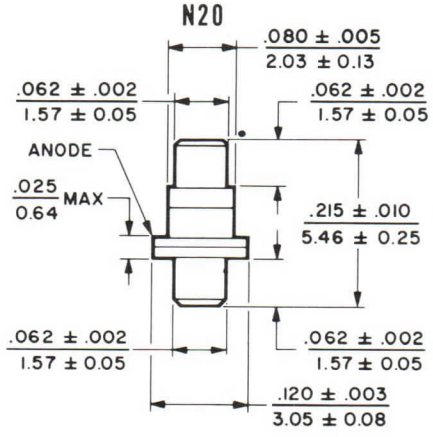

Ls = 0.50 nH Cp = 0.14 pF

N22

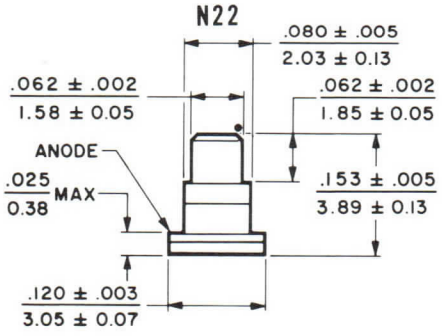

Ls = 0.50 nH Cp = 0.14 pF

• HEAT SINK END

DIMENSIONS: ← inch / mm →

varian

TECHNICAL DATA

VAD-210
Series

ATTENUATOR DIODES

1.0-18.0 GHz

FEATURES

- Fast switching — < 10 ns
- Wide dynamic range of r-f series resistance — 1.4-15,000 Ω
- Wide operating frequency — 1-18 GHz
- Planar passivation

DESCRIPTION

VAD-210 series attenuator diodes are of planar construction and are ideal for use in variable attenuator applications. They provide a wide dynamic range of r-f series resistance as a function of forward bias current. Depending upon r-f power and package parasitics, efficient performance is achieved over a frequency range of 1 to 18 gigahertz. The planar design provides optimum passivation at the junction region. Low zero-basis junction capacitance and series resistance make these well suited to high-frequency operation, where low insertion loss and high isolation are required. This series has very low thermal resistance and operates over a broad temperature range.

GENERAL CHARACTERISTICS [1]

PERFORMANCE

Minimum Breakdown Voltage (V)	Typical Minority Carrier Lifetime[2] (ns)	Junction Capacitance[3] ±20% (pF)	Series Resistance[4] At 10 mA Min (Ω)	Series Resistance[4] At 10 mA Max (Ω)	Series Resistance[4] At 100 mA Min (Ω)	Series Resistance[4] At 100 mA Max (Ω)	Typical Series Resistance[4] at 1 mA (Ω)	Type Number[5]
200	30	0.1	3.0	4.0	1.0	1.5	15	VAD-211
200	30	0.1	2.0	2.3	0.75	1.0	15	VAD-211A
200	12	0.1	4.0	6.0	1.5	2.0	20	VAD-212
200	12	0.1	3.0	3.5	1.0	1.25	20	VAD-212A
200	200	0.1	2.0	3.0	0.9	2.0	8	VAD-213
200	200	0.1	1.5	2.0	0.8	1.5	8	VAD-213A

ENVIRONMENTAL

Temperature Range

Operating	-65 to +175 °C
Storage	-85 to +300 °C

Short-Term Temperature

2 minutes*	325 °C
30 seconds*	350 °C

*VAD-210 series diodes can be soldered to special customer-designed mounting fixtures. If the diode temperature is kept at or less than these ratings, no degradation of diode characteristics will occur.

3637 2/77

Printed in U.S.A.

CHARACTERISTIC CURVES
Typical performance values

RF RESISTANCE VARIATION WITH BIAS CURRENT

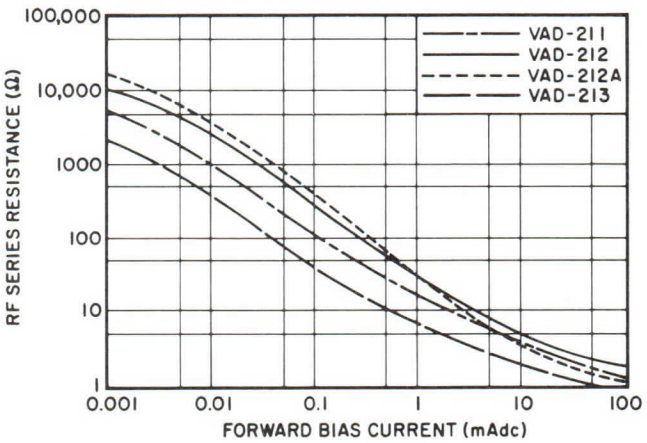

MINORITY CARRIER LIFETIME TEST CIRCUIT

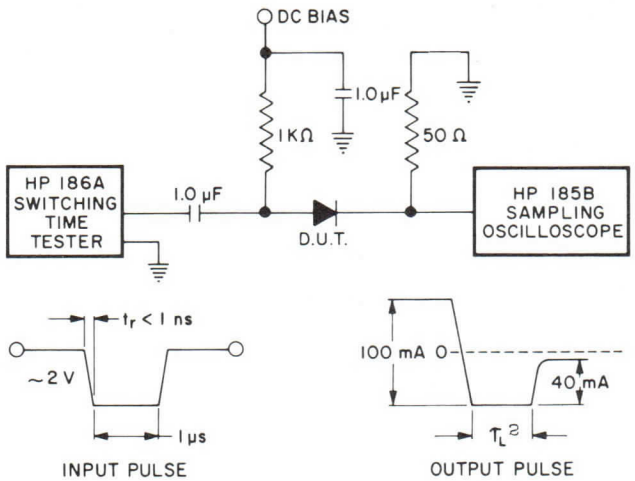

OUTLINE DRAWINGS

Case N9

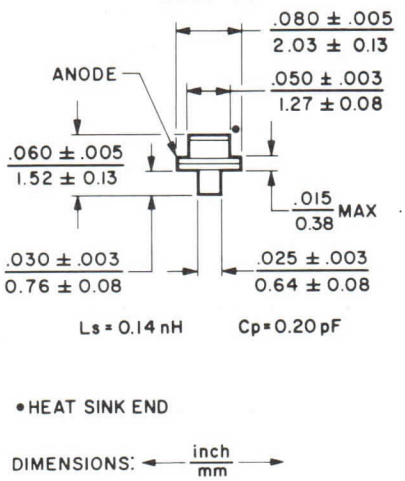

Case N19

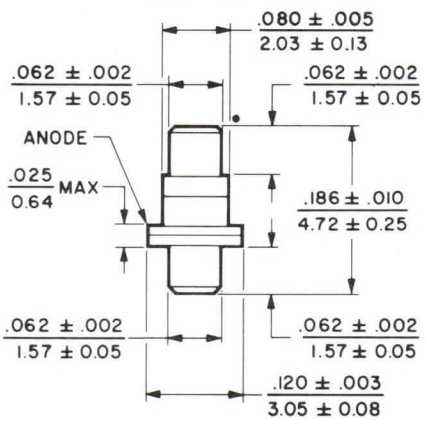

Case N20

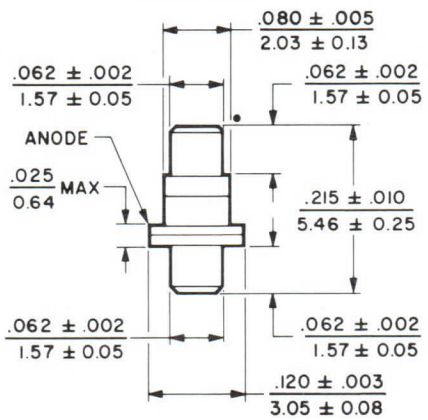

Case N32

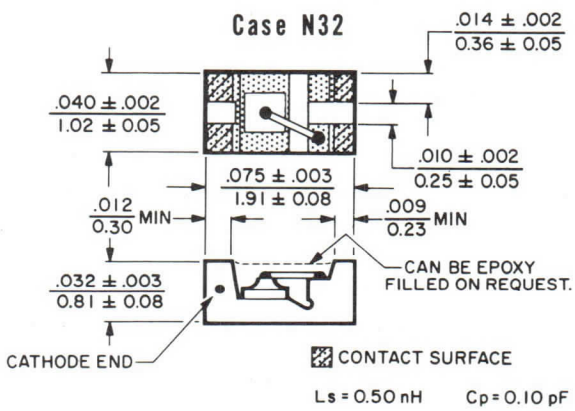

In addition to the above case styles these diodes are available as 0.020 inch (0.51 mm) or 0.030 inch (0.76 mm) square chips 0.005 inch (0.13 mm) thick or on carriers, such as N61, N62, N70, N71, N72, N73, or N114 shown in the Microwave Diodes Catalog, Pub. No. 3564.

NOTES:

1. Characteristic values are based on performance tests. These figures may change without notice as a result of additional data or product refinement. Consult the Varian Beverly Division before using this information for final equipment design.

2. Minority carrier lifetime, τ_L, is measured directly at the test output using the test circuit above.

3. Measured at a bias voltage of -50 V using a 1-MHz capacitance bridge. To obtain total capacitance of the packaged device, add the particular case capacitance to the junction capacitance. VAD-210 series diodes can also be supplied with other junction capacitance values.

4. Series resistance is measured at 1.0 GHz in a 50-ohm coaxial line with a 0.120-inch diameter center conductor.

5. When ordering, specify the case style desired by adding the case designation as a suffix to the type number. Example: VAD-211AN19.

varian
solid state division

PRELIMINARY
TECHNICAL DATA

VSD-C210
Series

SILICON
PIN DIODE CHIPS

0.5-35.0 GHz

FEATURES

- Low insertion loss
- High insulation
- Broadband performance
- Fast switching — < 10 ns
- Wide dynamic range of r-f series resistance — 1.4 to 15,000 ohms
- Pure gold contacts for bonding ease
- Wide operating frequency — 1-35 GHz

DESCRIPTION

VSD-C210 series silicon planar PIN switching diodes are chip versions of the VSD-210 series for use in hybrid microwave circuits. They provide extremely fast switching speeds, between 5 and 10 nanoseconds, for r-f power control, without package capacitance or lead inductance which tend to limit bandwidth and upper frequency response. Depending on r-f power, efficient operation is achieved over the exceptionally wide frequency range of 1 to 35 gigahertz. These chip diodes permit the circuit designer increased flexibility and control of matching circuitry for optimum circuit performance. For applications using large numbers of diodes, substantial cost savings can also be realized.

The chips are either in 0.020- or 0.030-inch squares approximately 0.005 inch thick. They can be supplied as unmounted chips or they can be mounted in LID packages, on mini carriers, on custom-designed substrates, or on customer-specified carriers.

Each contact surface has a layer of pure gold for bonding purposes. Chip metallization withstands temperatures as high as 500°C, which is more than adequate for normal bonding and lead attachment means. Although the preferred method of die bonding is by soldering with preforms such as AuGe, AuSn, or AuSi, conductive-epoxy or thermo-compression bonding techniques may be employed. For best results, bonding should be performed in an inert atmosphere and the entire circuit sealed. The seal can vary from a simple dust seal to a full hermetic seal.

GENERAL CHARACTERISTICS[1]

PERFORMANCE

Minimum Breakdown Voltage (V)	Junction Capacitance[2] ±20% (pF)	Typical Series Resistance[3] (Ω)	Typical Minority Carrier Lifetime[4] (ns)	Available Chip Sizes (in)	Type Number[5]
200	0.1	1.2	30	0.020, 0.030	VSD-C211
200	0.1	1.5	12	0.020, 0.030	VSD-C212
200	0.1	1.0	200	0.020, 0.030	VSD-C213
200	0.5	0.5	250	0.020, 0.030	VSD-C214
200	0.25	0.7	200	0.020, 0.030	VSD-C215

NOTE: Breakdown Voltage and Junction Capacitance are measured on a 100-percent basis. Series Resistance and Minority Carrier Lifetime are measured on a sample-lot basis with chips mounted in r-f packages.

2888 9/72

Printed in U.S.A.

CHARACTERISTIC CURVE

Typical performance values

VSD-C211A
RF RESISTANCE VARIATION WITH BIAS CURRENT

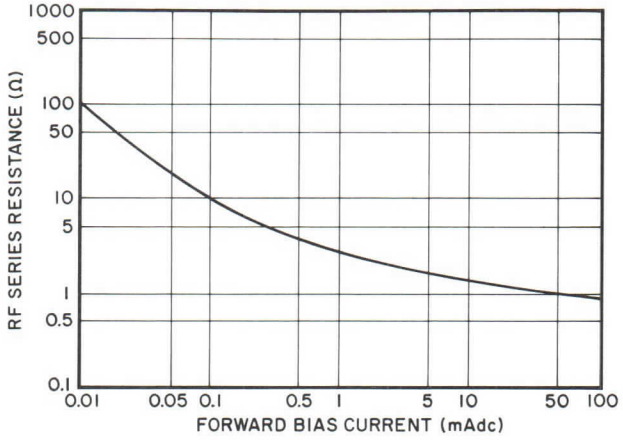

MINORITY CARRIER LIFETIME TEST CIRCUIT

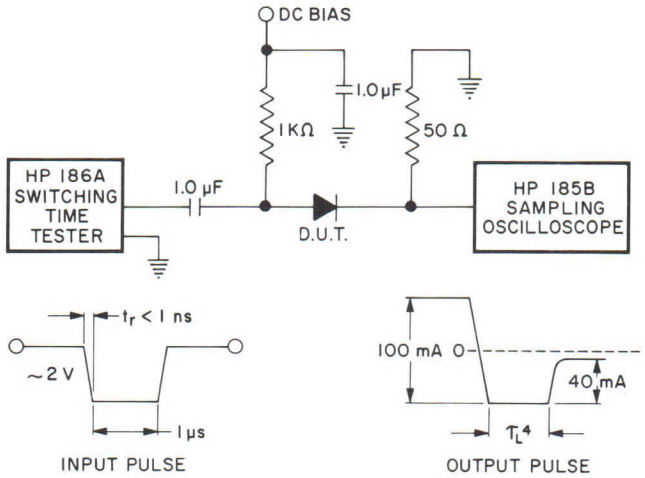

NOTES:

1. Characteristic values are based on performance tests. These figures may change without notice as a result of additional data or product refinement. Consult the Varian Solid State Division before using this information for final equipment design.
2. Measured at a bias voltage of -50 V using a 1-MHz capacitance bridge. VSD-C210 series diodes can be furnished with other junction capacitances.
3. Series resistance is measured at 100 mA and 1 GHz in a 50-ohm coaxial line having a 0.120-inch diameter center conductor.
4. Minority carrier lifetime, τ_L, is measured directly at the test output using the test circuit above.
5. These diode chips can be supplied as unmounted chips, or they can be mounted in LID packages, on mini carriers, on custom-designed substrates, or on customer-specified carriers.

OUTLINE DRAWING

Typical values

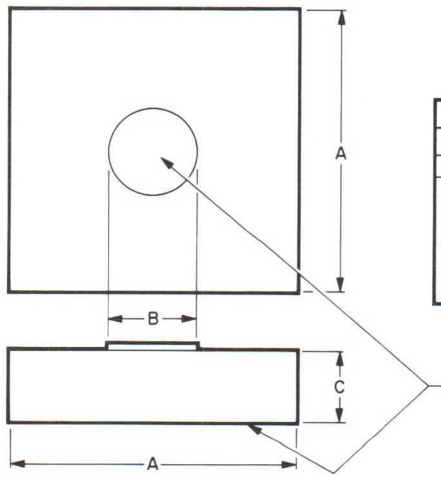

DIMENSIONS						TYPE NUMBER
A		B		C		
IN	MM	IN	MM	IN	MM	
.020 or .030	.508 or .762	.003	.076	.005	.127	VSD-C211
.020 or .030	.508 or .762	.003	.076	.005	.127	VSD-C212
.020 or .030	.508 or .762	.003	.076	.005	.127	VSD-C213
.020 or .030	.508 or .762	.007	.178	.005	.127	VSD-C214
.020 or .030	.508 or .762	.005	.127	.005	.127	VSD-C215

varian

TECHNICAL DATA

VSD-C300
VSD-C400
Series
SILICON
PIN DIODE CHIPS
0.5-35.0 GHz

FEATURES

- Low insertion loss
- High isolation
- Broadband performance
- Thermally-grown SiO_2 passivation
- Excellent stability
- Low contact resistance
- Pure gold contacts for bonding ease
- Outstanding uniformity of diodes within the same slice and consistent repeatability from slice to slice

DESCRIPTION

VSD-C300 and VSD-C400 Series silicon PIN diodes are designed specifically for use in integrated-circuit applications where low insertion loss and high isolation are essential, such as switches, phase shifters, limiters (active), current-controlled attenuators and modulators. Efficient performance can be achieved over the broad frequency range of 0.5 to 35.0 gigahertz. The passivation technique used provides optimum integrity at the surface junction region.

GENERAL CHARACTERISTICS[1]
ENVIRONMENTAL

Temperature Range
Operating ..... -65 to +150 °C
Storage ..... -85 to +300 °C
Short-Term Temperature* ..... 400 °C

*These diode chips can be soldered to special customer-designed mounting fixtures. If this diode temperature is kept at or less than this rating, no degradation of the diode characteristics will occur.

GENERAL CHARACTERISTICS[1]
PERFORMANCE

Min. V_B	C_j[2] ±20%	Max. R_s[3]	Typ. τ_L[4]	Type Number[5]
LOW Rs SERIES				
50	0.10	1.50	30	VSD-C300
100	0.05	1.70	90	VSD-C310
100	0.12	1.20	110	VSD-C311
100	0.25	0.75	135	VSD-C312
200	0.05	1.75	150	VSD-C320
200	0.10	1.30	150	VSD-C321
200	0.25	0.75	150	VSD-C322
200	0.50	0.40	240	VSD-C323
200	0.75	0.30	240	VSD-C324
500	0.10	1.30	350	VSD-C330
500	0.25	0.60	350	VSD-C331
500	0.50	0.40	450	VSD-C332
LOW LIFETIME SERIES				
50	0.10	1.70	5	VSD-C400
100	0.05	2.00	20	VSD-C410
100	0.12	1.30	20	VSD-C411
100	0.25	0.90	20	VSD-C412
200	0.05	2.00	30	VSD-C420
200	0.10	1.70	30	VSD-C421
200	0.25	0.90	30	VSD-C422
200	0.50	0.75	50	VSD-C423
200	0.75	0.50	50	VSD-C424

V_B = Breakdown voltage
C_j = Junction capacitance
R_s = Series resistance
τ_L = Minority carrier lifetime

NOTES:

1. Characteristic values are based on performance tests. These figures may change without notice as a result of additional data or product refinement. Consult the Varian Beverly Division before using this information for final equipment design.
2. Measured at a bias voltage of -50 V using a 1-MHz capacitance bridge. VSD-C300 and VSD-C400 series diode chips can be furnished with other junction capacitances.
3. Series resistance is measured at 100 mA and 1-GHz in a 50-ohm coaxial line having a 0.120-inch diameter center conductor.
4. Minority carrier lifetime, τ_L, is measured directly at the test output using the test circuit shown on the back.
5. These diode chips can be supplied as unmounted chips, or they can be mounted in LID packages, on mini carriers, on custom-designed substrates, or on customer-specified carriers.

3669 3/77

Printed in U.S.A.

CHARACTERISTIC CURVE, Typical values[1]

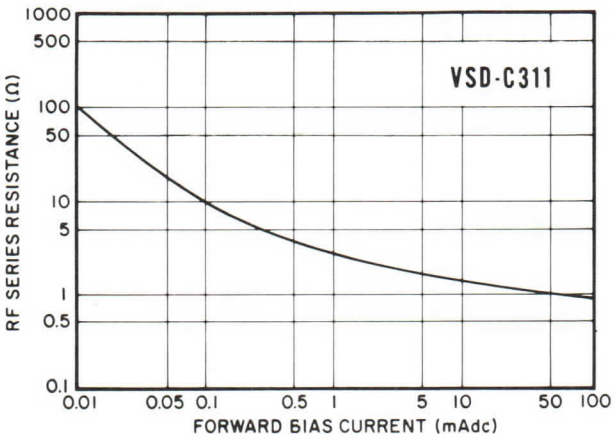

MINORITY CARRIER LIFETIME TEST CIRCUIT

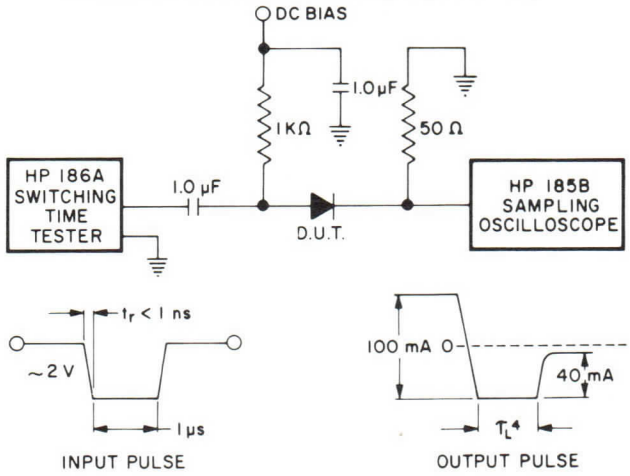

OUTLINE DRAWING

Typical values

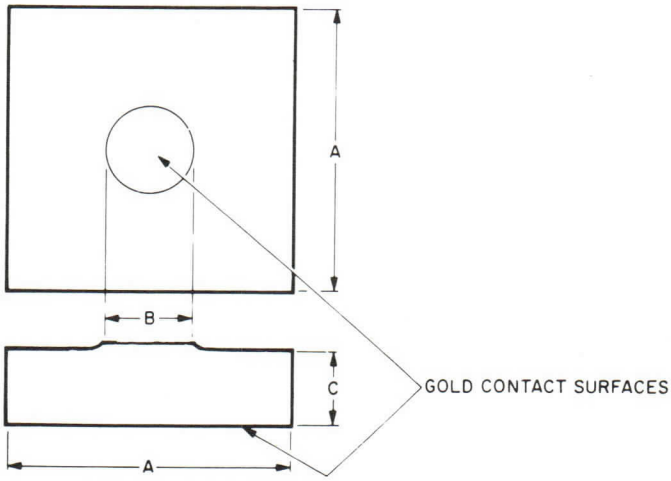

DIMENSIONS						TYPE NUMBER
A		B		C		
IN	MM	IN	MM	IN	MM	
.020 or .030	.508 or .762	.002	.051	.005	.127	VSD-C300
.020 or .030	.508 or .762	.0015	.038	.005	.127	VSD-C310
.020 or .030	.508 or .762	.0025	.064	.005	.127	VSD-C311
.020 or .030	.508 or .762	.0035	.089	.005	.127	VSD-C312
.020 or .030	.508 or .762	.002	.051	.005	.127	VSD-C320
.020 or .030	.508 or .762	.004	.102	.005	.127	VSD-C321
.020 or .030	.508 or .762	.007	.178	.005	.127	VSD-C322
.020 or .030	.508 or .762	.012	.305	.005	.127	VSD-C323
.020 or .030	.508 or .762	.015	.381	.005	.127	VSD-C324
.030	.762	.012	.305	.005	.127	VSD-C330
.030	.762	.020	508	.005	.127	VSD-C331
.050	.1275	.029	.737	.005	.127	VSD-C332

VSD-C400 series chips have the same dimensions as corresponding VSD-C300 types.
Example: VSD-C412 = VSD-C312.

varian

TECHNICAL DATA

VSD-300
VSD-400
Series

SILICON PIN DIODES

FEATURES

- Low insertion loss
- High isolation
- Broadband performance
- Thermally-grown SiO_2 passivation
- Excellent stability
- Low contact resistance
- Outstanding uniformity of diodes within the same slice and consistent repeatability from slice to slice

DESCRIPTION

VSD-300 and VSD-400 Series silicon PIN diodes are designed specifically for use in applications where low insertion loss and high isolation are essential, such as switches, phase shifters, limiters (active), current-controlled attenuators and modulators. They can be furnished in either ceramic or glass packages. Efficient performance can be achieved over the broad frequency range of 0.5 to 35.0 gigahertz. The passivation technique used provides optimum integrity at the surface junction region. The ceramic-packaged diodes also offer the low thermal resistance needed for high-power applications.

GENERAL CHARACTERISTICS [1]

ENVIRONMENTAL

Temperature Range

Operating	-65 to +150	°C
Storage	-85 to +300	°C

Short-Term Temperature

2 minutes*	325	°C
30 seconds*	350	°C

*VSD-300 and VSD-400 Series diodes can be soldered to special customer-designed mounting fixtures. If the diode temperature is kept at or less than these ratings, no degradation of the diode characteristic will occur.

GENERAL CHARACTERISTICS [1]

PERFORMANCE

Min. V_B (V)	C_j [2] ±20% (pF)	Max. R_s [3] (Ω)	Typ. τ_L [4] (ns)	Type Number [5]
LOW Rs SERIES				
50	0.10	1.50	30	VSD-300
100	0.05	1.70	90	VSD-310
100	0.12	1.20	110	VSD-311
100	0.25	0.75	135	VSD-312
200	0.05	1.75	150	VSD-320
200	0.10	1.30	150	VSD-321
200	0.25	0.75	150	VSD-322
200	0.50	0.40	240	VSD-323
200	0.75	0.30	240	VSD-324
500	0.10	1.30	350	VSD-330
500	0.25	0.60	350	VSD-331
500	0.50	0.40	450	VSD-332
LOW LIFETIME SERIES				
50	0.10	1.70	5	VSD-400
100	0.05	2.00	20	VSD-410
100	0.12	1.30	20	VSD-411
100	0.25	0.90	20	VSD-412
200	0.05	2.00	30	VSD-420
200	0.10	1.70	30	VSD-421
200	0.25	0.90	30	VSD-422
200	0.50	0.75	50	VSD-423
200	0.75	0.50	50	VSD-424

V_B = Breakdown voltage
C_j = Junction capacitance
R_s = Series resistance
τ_L = Minority carrier lifetime

NOTES:

1. Characteristics and curve are based on performance tests. These values may change without notice as a result of additional data or product refinement. Varian Beverly Division should be consulted before using these data for equipment design.
2. Measured at bias voltages of -30 V for breakdown voltages below 150 volts or -50 V above 150 volts using a 1-MHz capacitance bridge. To obtain total capacitance of the packaged device, add the particular case capacitance to the junction capacitance.
3. Series resistance is measured at 100 mA and 1.0 GHz in a 50-ohm coaxial line with a 0.120-inch diameter center conductor.
4. Minority carrier lifetime, τ_L, is measured directly at the test output using the test circuit shown on the back.
5. When ordering, specify the case style desired by adding the case designation as a suffix to the type number. Glass packaged PIN diodes are available in case style N74 only. Example: VSD-300N74.

3638 3/77

Printed in U.S.A.

VSD-300 & VSD-400

CHARACTERISTIC CURVE, Typical values[1]

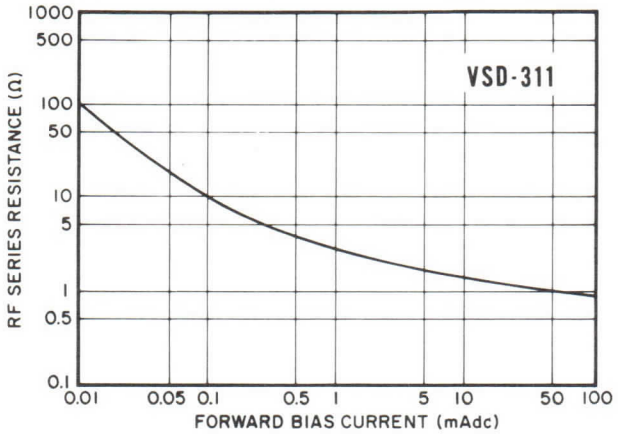

MINORITY CARRIER LIFETIME TEST CIRCUIT

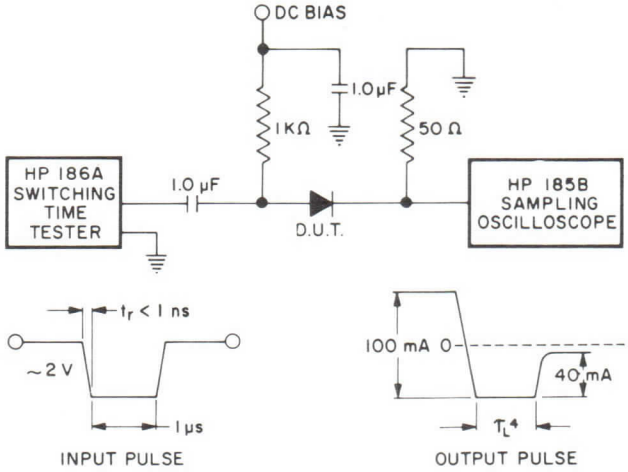

OUTLINE DRAWINGS

CASE STYLES

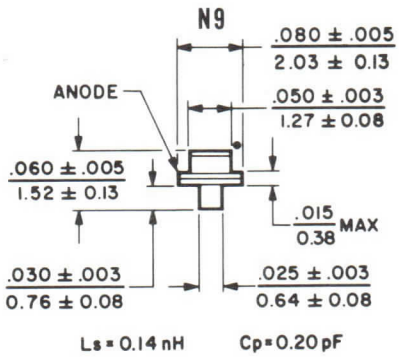

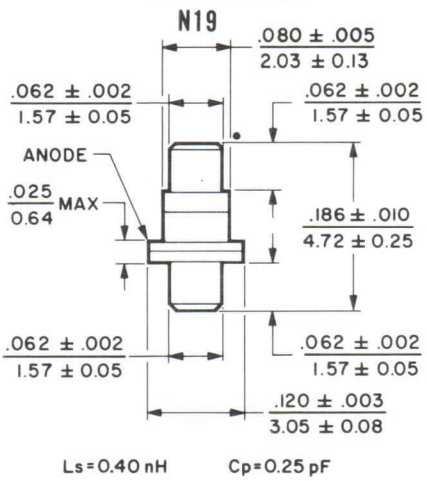

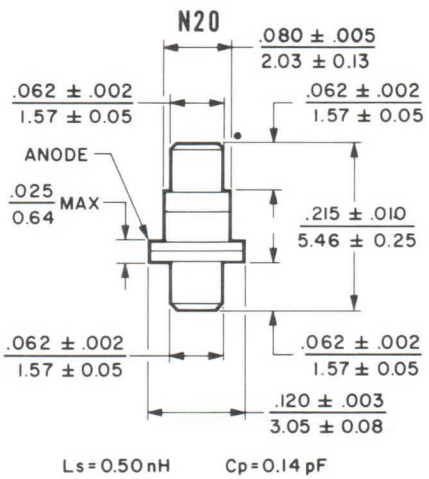

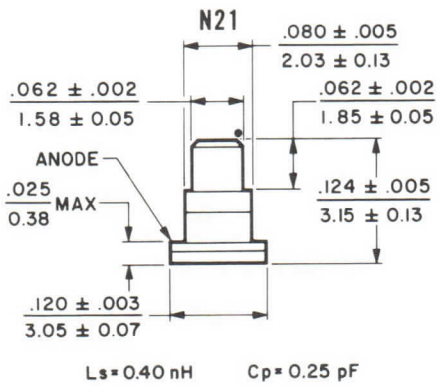

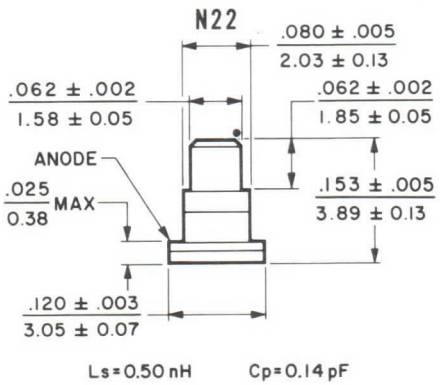

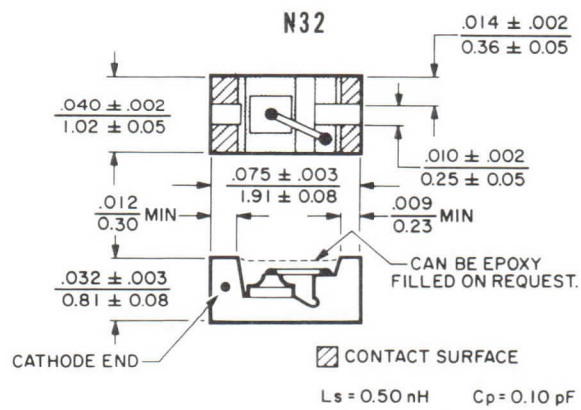

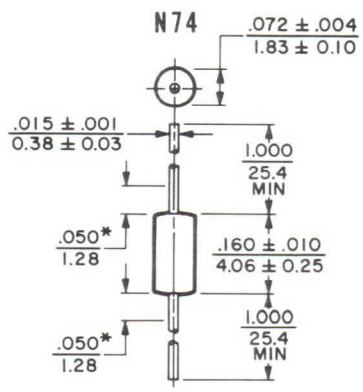

DIMENSIONS: ← inch / mm →

These diodes can also be supplied in chip form for integrated-circuit applications.

• HEAT SINK END

varian

PRELIMINARY
TECHNICAL DATA

VAT-300
Series

VERY HIGH-Q PLESA* TUNING VARACTORS

FEATURES

- Stable tuning — for Gunn oscillators through Ku band
- Very high Q — to 6000
- Ultra-low leakage current
- PLESA passivation
- High temperature operation
- Controlled capacitance/voltage characteristic
- Similar characteristics available for special applications
- Available in chip form for MIC applications

DESCRIPTION

VAT-300 Series high-Q PLESA tuning varactors are silicon diodes specially processed to obtain the benefits from both planar and mesa methods. The unique PLESA passivation allows planar processing to be applied to surfaces containing silicon mesas.

These diodes have the excellent r-f characteristics of mesa geometry. The extremely high Q permits satisfactory operation at high microwave frequencies and allows stable tuning in applications such as high-frequency VCOs and GUNN oscillators. Especially low leakage currents over wide temperature ranges together with good leakage-current stability provide the frequency and/or phase stability required by the most frequency-stable tunable transistor, IMPATT, or Gunn-effect oscillators.

Semiconductor production using PLESA passivation yields the high reliability of planar processing inherent within the passivated chips. Final diode fabrication is accomplished with thermally-bonded contacts and welded, hermetically-sealed cases to provide reliable performance under extremely adverse environmental conditions.

PERFORMANCE CHARACTERISTICS[1]

25 – VOLT SERIES

Junction Capacitance		Minimum Q[2] at -4 V bias		Minimum Junction Capacitance Tuning Ratio[3] ($C_{j^0}/C_{j\text{-}15}$)	Type Number[4]
0 V bias (pF)	-4 V bias (pF)	50 MHz	1 GHz		
0.5-0.75	0.22-0.34	6000	300	3.6	VAT-301
0.75-1.0	0.34-0.45	5700	285	3.6	VAT-302
1.0-1.25	0.45-0.56	5400	270	3.6	VAT-303
1.25-1.5	0.56-0.67	5100	255	3.6	VAT-304
1.5-2.0	0.67-0.90	4800	240	3.6	VAT-305
2.0-2.5	0.90-1.12	4500	225	3.6	VAT-306

*Varian Trademark

3650 4/77

Printed in U.S.A.

GENERAL CHARACTERISTICS[1]

ELECTRICAL

Reverse Breakdown Voltage, min	25 V
Leakage Current, typical[5]	
At 25° C	5 nA
At 150° C	500 nA
Case Capacitance, typical	
N9	0.20 pF
N11	0.11 pF
N16 and N20	0.14 pF
Capacitance/Temperature Coefficient, typical[6]	200 ppm/° C
Lead Inductance, typical[7]	
N9	0.14 nH
N11	0.22 nH
N16 and N20	0.50 nH

ENVIRONMENTAL

Ambient Temperature Range	
Operating	-55 to +175 °C
Storage	-55 to +200 °C

NOTES:

1. Characteristic values are based on performance tests. These figures may change without notice as a result of additional data or product refinement. The Varian Beverly Division should be consulted before using these data for equipment design.

2. Q is calculated from the equation:

$$Q = \frac{1}{2\pi f R_s C_j}$$

where

f = 50 MHz

R_s = Series Resistance

C_j = Junction capacitance

R_s is measured at 1 GHz and -4 V bias using transmission loss technique. C_j is measured at 1 MHz on a Boonton bridge.

3. Total capacitance tuning ratio is a function of package capacitance.

4. When ordering, specify the case style desired by adding the case designation as a suffix to the type number.
   Example: VAT-300N10
   Other case styles can be furnished on special order.

5. Measured with a reverse bias voltage of 20 volts.

6. Averaged between -65 and +85° C. Capacitance/Temperature Coefficient is calculated in parts per million per degree Celsius (ppm/° C) from:

$$T_C \text{ Coeff} = \frac{C_T \text{ (at } 85°C) - C_T \text{ (at } -65° C) \quad 10^6}{(85 + 65) \quad C_T \text{ (at } 25° C)}$$

where

C_T = Sum of junction capacitance at -4 volts bias plus case capacitance at a given ambient temperature.

7. Measured with 100 mA forward bias current and 1 GHz test frequency using a coaxial slotted line.

OUTLINE DRAWINGS

Case N9

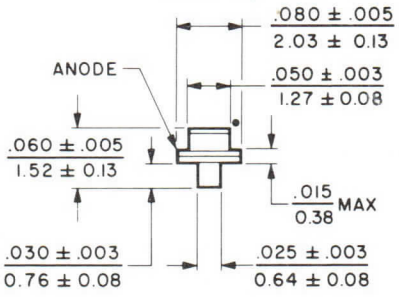

Case N11

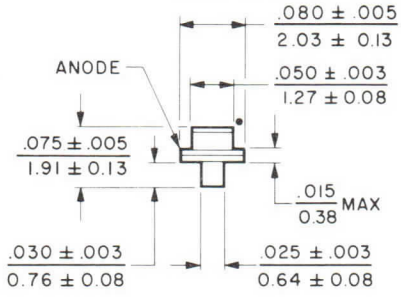

Case N16

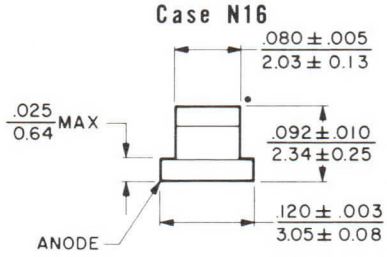

Case N20

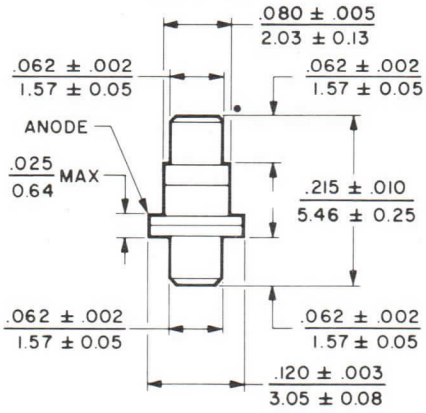

DIMENSIONS: ← inch / mm →

• HEAT SINK END

varian
solid state division

PRELIMINARY
TECHNICAL DATA

VSD-300

SILICON
PIN DIODES

FEATURES

- Low insertion loss
- High isolation
- Broadband performance
- Thermally-grown SiO_2 passivation
- Excellent stability
- Low contact resistance
- Outstanding uniformity of diodes within the same slice and consistent repeatability from slice to slice.

DESCRIPTION

VSD-300 Series silicon PIN diodes are designed specifically for use in applications where low insertion loss and high isolation are essential, such as switches, phase shifters, limiters (active), current-controlled attenuators and modulators. Efficient performance can be achieved over the broad frequency range of 0.5 to 35.0 gigahertz. The passivation technique used provides optimum integrity at the surface junction region. This series also offers the low thermal resistances needed for high-power applications.

GENERAL CHARACTERISTICS[1]

PERFORMANCE

Minimum Breakdown Voltage (V)	Junction Capacitance[2] ± 20% (pF)	Maximum Series Resistance[3] (Ω)	Typical Minority Carrier Lifetime[4] (ns)	Maximum Thermal Resistance[5] (°C/W)	Type Number[6]
50	0.10	1.7	5	60	VSD-300
100	0.05	2.0	75	55	VSD-310
100	0.12	1.5	100	50	VSD-311
100	0.25	0.7	135	40	VSD-312
200	0.05	2.0	150	60	VSD-320
200	0.10	1.5	150	45	VSD-321
200	0.25	0.7	150	30	VSD-322
200	0.50	0.4	240	20	VSD-323
200	0.75	0.3	240	15	VSD-324
500	0.10	1.5	350	45	VSD-330
500	0.25	0.7	350	30	VSD-331
500	0.50	0.5	450	18	VSD-332

2889 9/72

Printed in U.S.A.

ENVIRONMENTAL

Temperature Range	
Operating	-65 to +150 °C
Storage	-85 to +300 °C
Short-Term Temperature	
2 minutes*	325 °C
30 seconds*	350 °C

*VSD-300 Series diodes can be soldered to special customer-designed mounting fixtures. If the diode temperature is kept at or less than these ratings, no degradation of the diode characteristics will occur.

CHARACTERISTIC CURVE, Typical values

VSD-311
RF RESISTANCE VARIATION WITH BIAS CURRENT

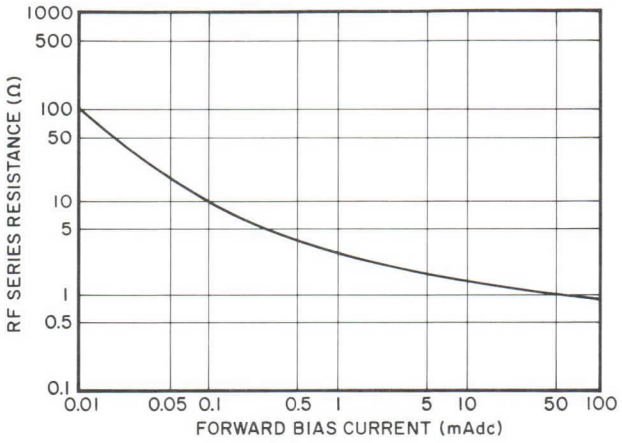

MINORITY CARRIER LIFETIME TEST CIRCUIT

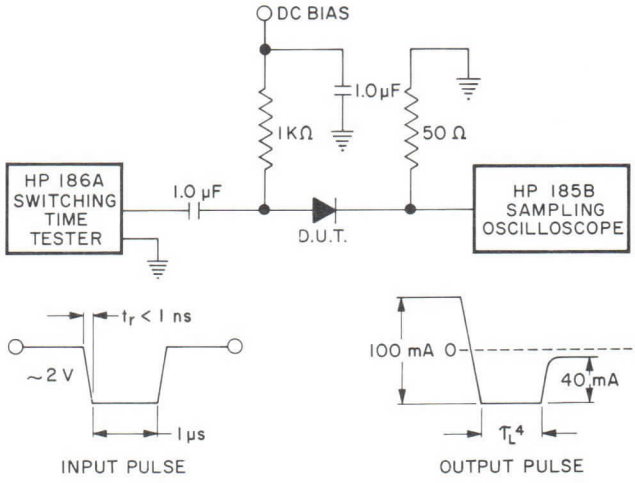

OUTLINE DRAWINGS

Case N9

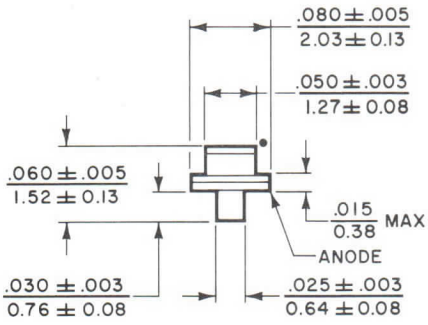

Case N19

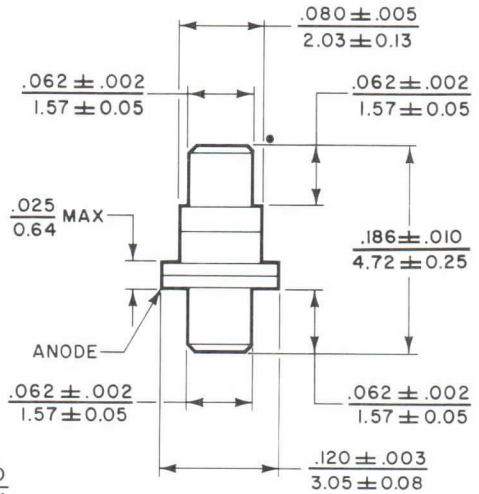

Case N20

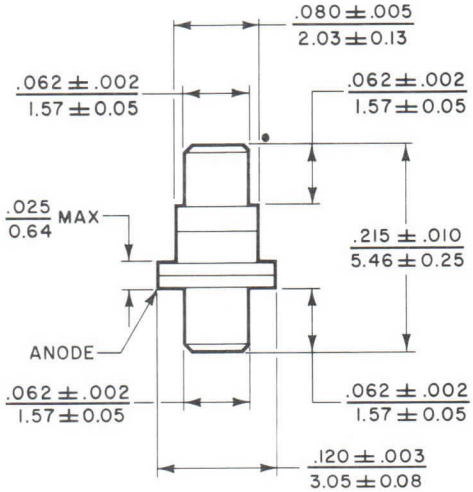

Case N28

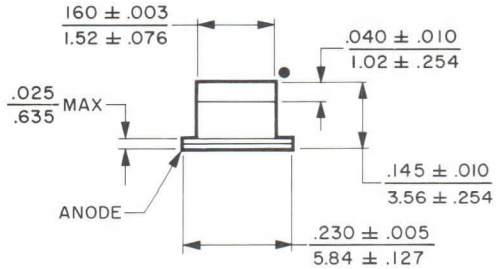

DIMENSIONS ← inch / mm → • HEAT SINK END

For other available case styles, refer to the "Diode Case Styles" Data Sheet, Pub. No. 2546. These diodes can also be supplied in chip form for integrated-circuit applications.

NOTES:

1. Characteristic values are based on performance tests. These figures may change without notice as a result of additional data or product refinement. Consult the Varian Solid State Division before using this information for final equipment design.
2. Measured at bias voltages of -30 V for breakdown voltages below 150 volts or -50 V above 150 volts using a 1-MHz capacitance bridge. To obtain total capacitance of the packaged device, add the particular case capacitance to the junction capacitance.
3. Series resistance is measured at 100 mA and 1.0 GHz in a 50-ohm coaxial line with a 0.120-inch diameter center conductor.
4. Minority carrier lifetime, τ_L, is measured directly at the test output using the test circuit above.
5. Value is for an infinite heat sink and 25°C ambient temperature; not applicable to the N9 case.
6. When ordering, specify the case style desired by adding the case designation as a suffix to the type number. The VSD-332, and VSD-333 are available only in the N28 case. Examples: VSD-300N19; VSD-332N28.

varian
solid state division

TECHNICAL DATA

VSD-C300
Series

PIN DIODE CHIPS

0.5-35.0 GHz

FEATURES

- Low insertion loss
- High isolation
- Broadband performance
- Thermally-grown SiO_2 passivation
- Excellent stability
- Low contact resistance
- Pure gold contacts for bonding ease
- Outstanding uniformity of diodes within the same slice and consistent repeatability from slice to slice.

GENERAL CHARACTERISTICS[1]

PERFORMANCE

Minimum Breakdown Voltage (V)	Junction Capacitance[2] ± 20% (pF)	Maximum Series Resistance[3] (Ω)	Typical Minority Carrier Lifetime[4] (ns)	Available Chip Sizes (in)	Type Number[5]
50	0.10	1.7	5	0.020 or 0.030	VSD-C300
100	0.05	2.0	75	0.020 or 0.030	VSD-C310
100	0.12	1.5	100	0.020 or 0.030	VSD-C311
100	0.25	0.7	135	0.020 or 0.030	VSD-C312
200	0.05	2.0	150	0.020 or 0.030	VSD-C320
200	0.10	1.5	150	0.020 or 0.030	VSD-C321
200	0.25	0.7	150	0.020 or 0.030	VSD-C322
200	0.50	0.4	240	0.020 or 0.030	VSD-C323
200	0.75	0.3	240	0.020 or 0.030	VSD-C324
500	0.10	1.5	350	0.030	VSD-C330
500	0.25	0.7	350	0.030	VSD-C331
500	0.50	0.5	450	0.050	VSD-C332

NOTE: Breakdown Voltage and Junction Capacitance are measured on a 100-percent basis. Series Resistance and Minority Carrier Lifetime are measured on a sample-lot basis with chips mounted in r-f packages.

ENVIRONMENTAL

Temperature Range
- Operating ..... -65 to +150 °C
- Storage ..... -85 to +300 °C

Short-Term Temperature* ..... 500 °C

*VSD-C300 series chips can be soldered to special customer-designed mounting carriers. If the diode temperature is kept at or less than these ratings, no degradation of diode characteristics will occur.

2893 9/72

Printed in U.S.A.

CHARACTERISTIC CURVE

Typical performance values

VSD-C311
RF RESISTANCE VARIATION WITH BIAS CURRENT

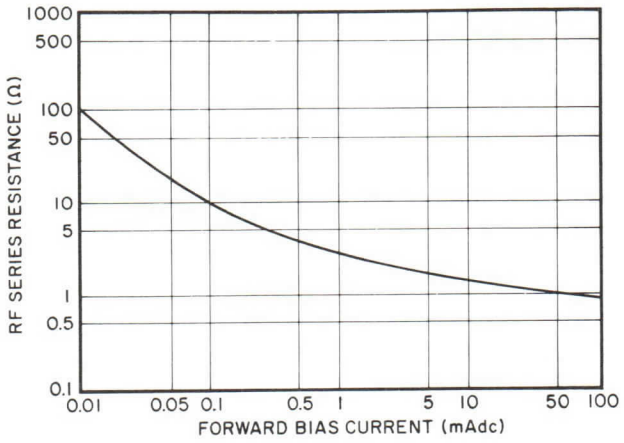

MINORITY CARRIER LIFETIME TEST CIRCUIT

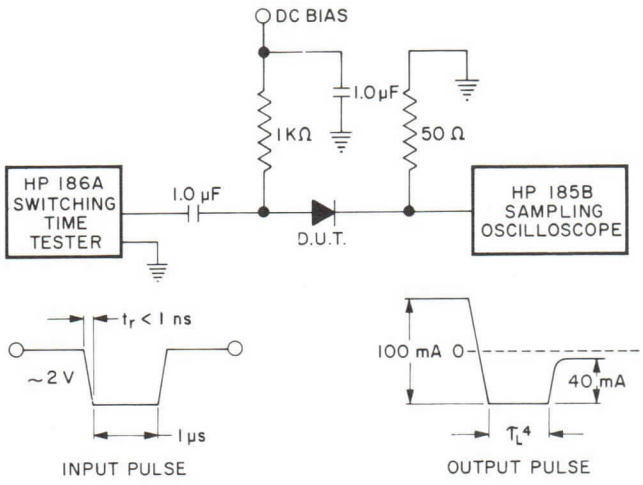

NOTES:

1. Characteristic values are based on performance tests. These figures may change without notice as a result of additional data or product refinement. Consult the Varian Solid State Division before using this information for final equipment design.
2. Measured at a bias voltage of -50 V using a 1-MHz capacitance bridge. VSD-C300 series diodes can be furnished with other junction capacitances.
3. Series resistance is measured at 100 mA and 1-GHz in a 50-ohm coaxial line having a 0.120-inch diameter center conductor.
4. Minority carrier lifetime, τ_L, is measured directly at the test output using the test circuit above.
5. These diode chips can be supplied as unmounted chips, or they can be mounted in LID packages, on mini carriers, on custom-designed substrates, or on customer-specified carriers.

OUTLINE DRAWING

Typical values

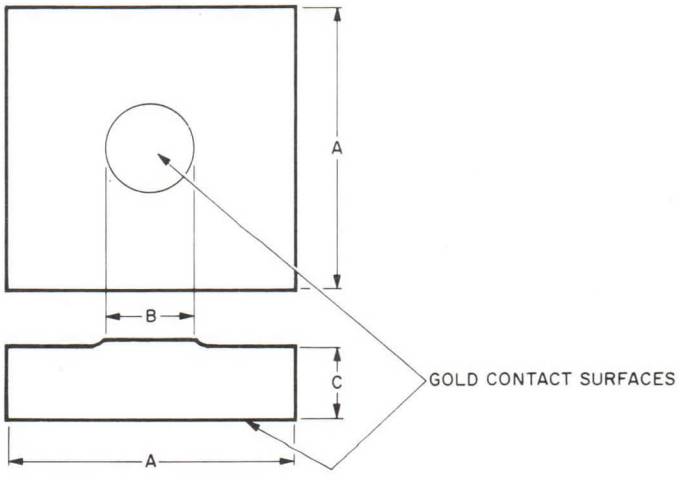

DIMENSIONS						TYPE NUMBER
A		B		C		
IN	MM	IN	MM	IN	MM	
.020 or .030	.508 or .762	.002	.051	.005	.127	VSD-C300
.020 or .030	.508 or .762	.0015	.038	.005	.127	VSD-C310
.020 or .030	.508 or .762	.0025	.064	.005	.127	VSD-C311
.020 or .030	.508 or .762	.0035	.089	.005	.127	VSD-C312
.020 or .030	.508 or .762	.002	.051	.005	.127	VSD-C320
.020 or .030	.508 or .762	.004	.102	.005	.127	VSD-C321
.020 or .030	.508 or .762	.007	.178	.005	.127	VSD-C322
.020 or .030	.508 or .762	.012	.305	.005	.127	VSD-C323
.020 or .030	.508 or .762	.015	.381	.005	.127	VSD-C324
.030	.762	.012	.305	.005	.127	VSD-C330
.030	.762	.020	.508	.005	.127	VSD-C331
.050	.1275	.029	.737	.005	.127	VSD-C332

varian
solid state east division

PRELIMINARY
TECHNICAL DATA

VSN-C320
Series

NIP DIODE CHIPS

FEATURES

- Low insertion loss
- High isolation
- Broadband performance
- Thermally-grown SiO_2 passivation
- Excellent stability
- Low contact resistance
- Outstanding uniformity of diodes within the same slice and consistent repeatability from slice to slice.

DESCRIPTION

VSN-C320 series NIP diode chips are ideal devices for use in control circuits, e.g. switches, modulators, etc. where the polarity of the power supply requires the use of an NIP diode instead of a PIN diode. They are especially suitable for MIC applications where reversing the polarity of diode chips is impractical.

The NIP diode series, developed by Varian, has the same r-f properties as the VSD-C320 series of PIN diode chips, but they require controlled voltage and currents of opposite polarity. These diodes feature mesa construction and are processed using planar passivation making them capable of withstanding extreme environments without the need for hermetically-sealed packaging. Gold contacts on both sides of the chip and the thickness is controlled to very tight tolerances for consistent and easy bonding. Thermal compression bonding techniques can be used without degradation of diode properties. Temperatures as high as 500°C for a few minutes are acceptable. Chips are available in both 0.020" and 0.030" square sizes.

OUTLINE DRAWING

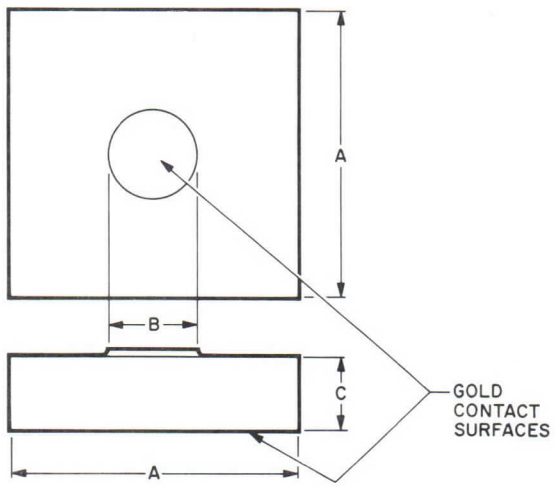

DIMENSIONS						TYPE NUMBER
A		B		C		
IN	MM	IN	MM	IN	MM	
.020 or .030	.508 or .762	.002	.051	.005	.127	VSN-C320
.020 or .030	.508 or .762	.004	.102	.005	.127	VSN-C321
.020 or .030	.508 or .762	.007	.178	.005	.127	VSN-C322
.020 or .030	.508 or .762	.012	.305	.005	.127	VSN-C323
.020 or .030	.508 or .762	.015	.381	.005	.127	VSN-C324

3053 10/73

Printed in U.S.A.

GENERAL CHARACTERISTICS[1]

Minimum Breakdown Voltage (V)	Junction Capacitance[2] ± 20% (pF)	Maximum Series Resistance[3] (Ω)	Typical Minority Carrier Lifetime[4] (ns)	Available Chip Sizes (in^2)	Type Number[5]
200	0.05	2.0	150	0.020 or 0.030	VSN-C320
200	0.10	1.5	150	0.020 or 0.030	VSN-C321
200	0.25	0.7	150	0.020 or 0.030	VSN-C322
200	0.50	0.4	240	0.020 or 0.030	VSN-C323

NOTE: Breakdown Voltage and Junction Capacitance are measured on a 100-percent basis. Series Resistance and Minority Carrier Lifetime are measured on a sample-lot basis with chips mounted in r-f packages.

ENVIRONMENTAL

Temperature Range
- Operating ..... -65 to +150 °C
- Storage ..... -85 to +300 °C

Short-Term Temperature* ..... 500 °C

*VSN-C320 series chips can be soldered to special customer-designed mounting carriers. If the diode temperature is kept at or less than these ratings, no degradation of diode characteristics will occur.

CHARACTERISTIC CURVES[1]

Typical performance values

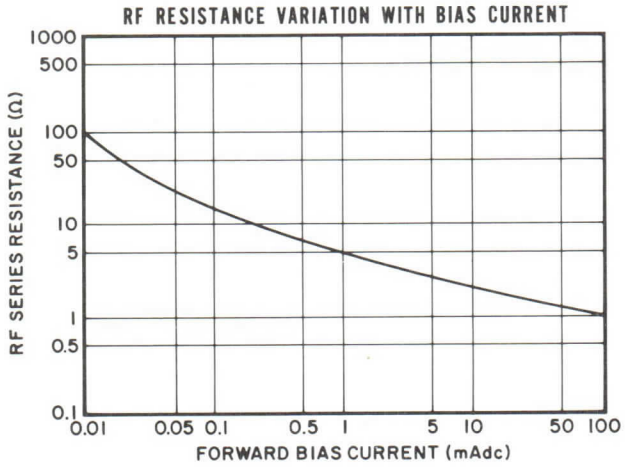

MINORITY CARRIER LIFETIME TEST CIRCUIT

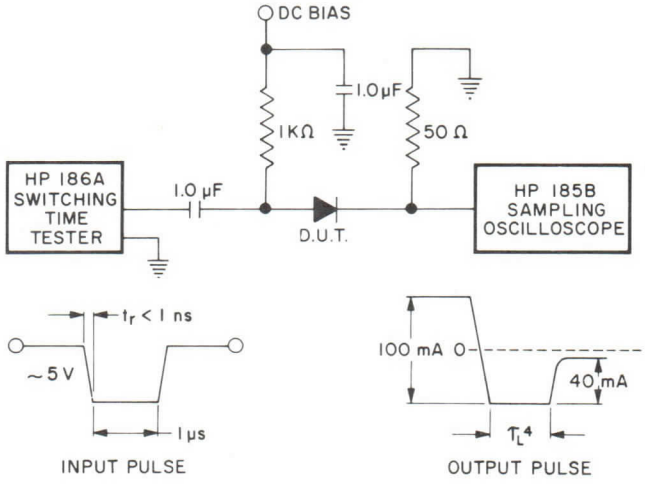

NOTES:

1. Characteristic values are based on performance tests. These figures may change without notice as a result of additional data or product refinement. Consult the Varian Solid State East Division before using this information for final equipment design.

2. Measured at a bias voltage of -50 V using a 1-MHz capacitance bridge. VSN-C320 series diodes can be furnished with other junction capacitances.

3. Series resistance is measured at 100 mA and 1 GHz in a 50-ohm coaxial line having a 0.120-inch diameter center conductor.

4. Minority carrier lifetime, τ_L, is measured directly at the test output using the test circuit above.

5. These diode chips can be supplied as unmounted chips, or they can be mounted in LID packages, on mini carriers, on custom-designed substrates, or on customer-specified carriers.

varian

TECHNICAL DATA

VAB-800
Series
BIMODE®
MICROWAVE DIODES
0.3-25.0 GHz

DESCRIPTION

Varian VAB-800 Series BIMODE diodes are special diodes for frequency-multiplier applications. They combine the non-linear properties of step-recovery diodes and varactor diodes in a single device. They provide state-of-the-art efficiencies and power handling capability. Full frequency coverage is available from 300 megahertz to 25 gigahertz. Each BIMODE diode provides high reliability, wide dynamic range, and controlled lifetime at low cost.

GENERAL CHARACTERISTICS[1]

ELECTRICAL

Minimum Reverse Breakdown Voltage (V)	Junction Capacitance[2] at -6 Volts (pF)	Minimum Cutoff Frequency[3] or Maximum Series Resistance (GHz) or (Ω)	Typical Minority Carrier Lifetime (ns)	Maximum Transition Time (ps)	Type Number
200	18-26	0.35 Ω	450	10 000	VAB-800
175	18-26	0.35 Ω	400	8 000	VAB-810
150	10-20	40	350	5 000	VAB-820
120	8-10	60	210	3 000	VAB-801
100	8-10	60	180	2 000	VAB-811
120	4-5	90	200	3 000	VAB-802
100	4-5	90	170	2 000	VAB-812
80	4-6	110	180	925	VAB-822
80	2.5-3.5	120	100	1 000	VAB-803
80	1.5-2.5	150	90	750	VAB-804
60	1.5-2.5	150	60	400	VAB-814
40	1.0-1.5	160	20	150	VAB-825
40	0.5-0.7	175	18	150	VAB-805
30	0.3-0.5	200	10	100	VAB-806
6	0.15-0.2	350	3	---	VAB-807*

PERFORMANCE

Power Output[4] (W)	Output Frequency Range[5] (GHz)	Efficiency As A Tripler[6] (%)	Thermal Resistance** (°C/W)	Case Styles[7]	Type Number
3-20	0.3-0.750	70	3	N26, N27, N28	VAB-800
2-24	0.5-1.0	65	3	N26, N27, N28	VAB-810
2-16	0.6-1.2	60	5	N26, N27, N28	VAB-820
1-10	0.75-1.5	60	7	N25, N26, N28	VAB-801
1-10	1.0-2.5	65	7	N25, N26, N28	VAB-811
1-8	1.5-3.0	55	10	N25, N26, N28	VAB-802
1-6	2.0-4.0	55	11	N25, N26, N28	VAB-812
2.0	2.0	--	---	N19, N20, N21, N22, N23	VAB-822
0.5-4.0	3.0-5.0	50	13	N20, N25, N26, N28	VAB-803
0.5-2.5	5.0-7.0	45	15	N20, N25, N26, N28	VAB-804
0.3-1.5	5.0-8.0	45	15	N20, N25, N26, N28	VAB-814
2.5	5.0-8.0	50	25	N20, N26	VAB-825
0.1-0.6	8.0-12.0	40	50	N20	VAB-805
0.05-0.30	12.0-15.0	30	75	N20	VAB-806
0.05	15.0-25.0	15	300	N9, N19	VAB-807*

* Reverse polarity package

** Does not apply to N9 case style

3663 3/77

Printed in U.S.A.

ABSOLUTE RATINGS

Storage Temperature	-85 to +200 °C
Operating Temperature	-55 to +175 °C
Short Term Temperature	
2 minutes*	250 °C
30 seconds*	285 °C

*BIMODE diodes can be soldered to special customer-designed mounting fixtures. If the diode temperature is kept at or less than these ratings, no degradation of diode characteristics will occur.

NOTES:

1. Characteristic values are based on performance tests. These figures may change without notice as a result of additional data or product refinement. Consult the Varian Beverly Division before using this information for equipment design.
2. Normally controlled ±10%, but ±3% control is available. Diodes having capacitance values other than those shown can be supplied at no extra cost.
3. Measured at -6 volts.
4. Typical values at the midpoint of the specified frequency range. BIMODE diodes can be operated at full efficiency over a broad range of drive power.
5. Operable range, not instantaneous bandwidth.
6. Typical values for use as guidelines in circuit design. These diodes can be used for multiplication orders from 2 to 6.
7. When ordering, specify case style by adding the suffix N9, N19, N20, N21, N22, N23, N25, N26, N27, or N28. Example: VAB-800N26.

OUTLINE DRAWINGS
CASE STYLES

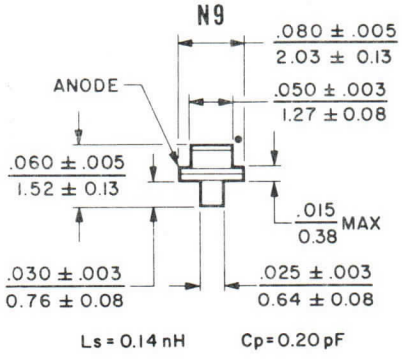

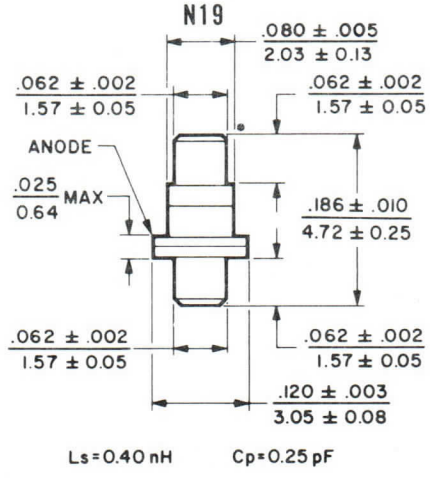

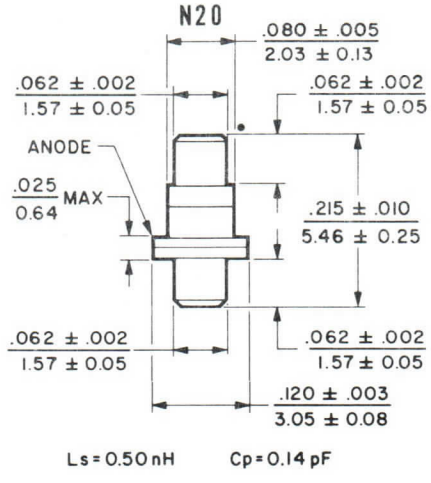

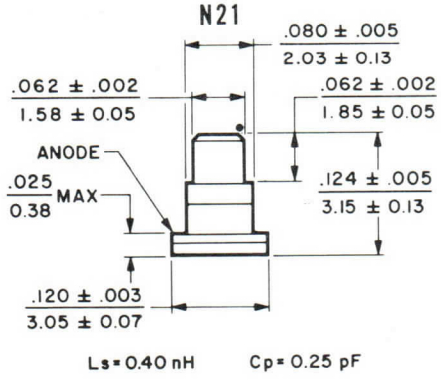

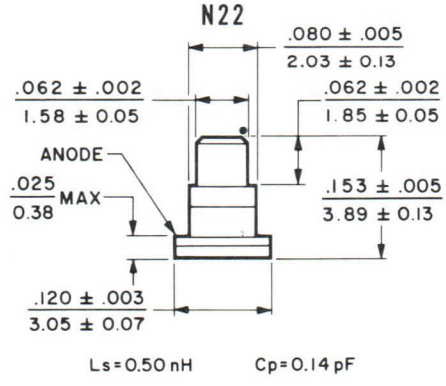

OUTLINE DRAWINGS(continued)

N23

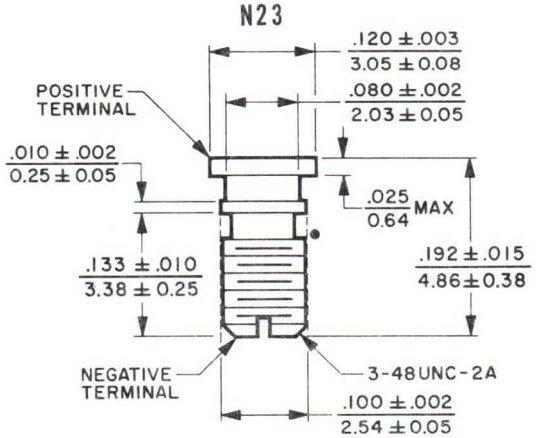

Ls = 0.40 nH Cp = 0.25 pF

N25

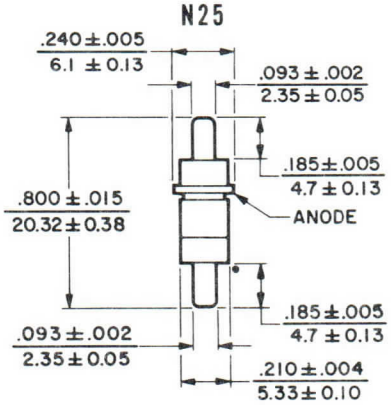

Ls = 0.90 nH Cp = 0.35 pF

N26

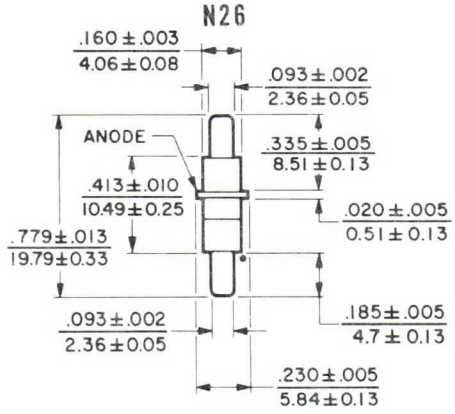

Ls = 0.90 nH Cp = 0.38 pF

N27

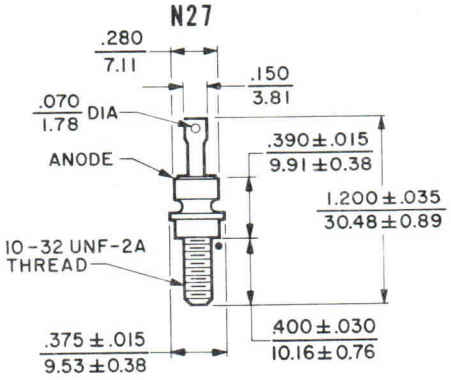

N28

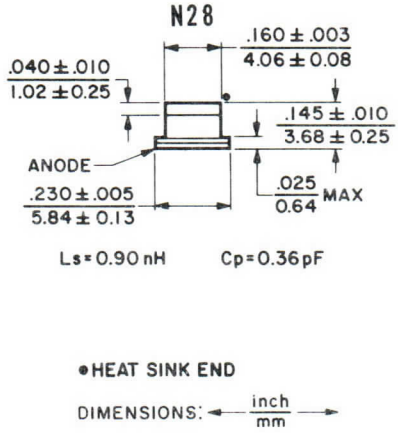

Ls = 0.90 nH Cp = 0.36 pF

●HEAT SINK END

DIMENSIONS: ← inch / mm →

Other case styles are available upon request.

varian

TECHNICAL DATA

VAB-800-2 and VAB-800A-2 Series

STACKPACK† DIODES

DESCRIPTION

The Varian Stackpack Diode consists of two high-efficiency BIMODE® Diode chips combined in a series-stacked configuration. Each diode chip is housed in its individual beryllia package and both packages are then brazed into a single unit. Thus the packages are connected electrically in series and thermally in parallel. Power-handling capability is greater than that of a single diode because the area of each diode junction is larger by the number of units connected in series.

These diodes are designed for frequency multiplication, conversion, and modulation in telemetry and point-to-point microwave transmission applications where high power and efficiency are required. In addition, since these diodes combine the advantage of fast transition time and high breakdown voltage, they are especially suited for high-power step-recovery-multiplier and impulse-generator applications.

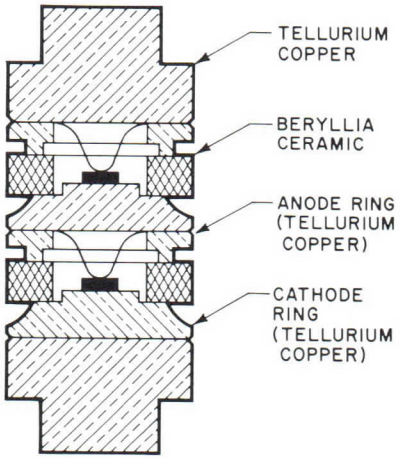

GENERAL CHARACTERISTICS [1]

ELECTRICAL

Minimum Reverse Breakdown Voltage (V)	Junction Capacitance [2] at -12 Volts (pF)	Minimum Cutoff Frequency [3] Or Maximum Series Resistance (GHz) or (Ω)	Typical Minority Carrier Lifetime (ns)	Maximum Transition Time (ps)	Type Number
280	18-26	0.4 Ω	450	6,000	VAB-810A-2
160	8-10	50	160	2,000	VAB-811A-2
160	4-5	70	130	2,000	VAB-812A-2
120	2.5-3.5	120	60	700	VAB-813A-2
120	1.5-2.5	120	60	500	VAB-814A-2
80	1.0-1.5	145	20	180	VAB-825-2
120	1.0-1.5	140	50	400	VAB-815A-2
90	0.8-1.3	150	30	300	VAB-816A-2
90	1.0-1.5	145	30	300	VAB-824A-2
80	0.5-0.7	160	18	180	VAB-805-2
60	0.3-0.5	180	10	120	VAB-806-2

PERFORMANCE

Output Frequency Range [4] (GHz)	Efficiency As A Tripler [5] (%)	Available Output Power [3] (W)	Maximum Thermal Resistance (°C/W) [7]	Maximum Thermal Resistance (°C/W) [8]	Case Style [9]	Type Number
0.5-1.0	60	60	3	2.2	N35	VAB-810A-2
1.0-2.5	65	35	7	5.5	N35	VAB-811A-2
2.0-4.0	55	20	11	8	N35, N43	VAB-812A-2
3.0-5.0	50	10	13	10	N35, N43, N49	VAB-813A-2
5.0-8.0	50	7.0	15	11.5	N35, N43, N49	VAB-814A-2
5.0-8.0	45	4.0	25	19.5	N43, N49	VAB-825-2
5.5-9.0	50	6.0	18	15	N43, N49	VAB-815A-2
7.0-9.0	45	5.0	22	18.5	N43, N49	VAB-816A-2
7.0-10.0	45	5.0	20	17	N43, N49	VAB-824A-2
8.0-12.0	38	2.0	40	32	N49	VAB-805-2
9.0-13.0	50*	2.0*	50	40	N49	VAB-806-2

3657 5/77

† Varian Trademark

*Efficiency and Output Power as a doubler.

Printed in U.S.A.

ABSOLUTE RATINGS

Storage Temperature	-85 to +200 °C
Operating Temperature	-55 to +200 °C
Short Term Temperature,	
2 minutes*	235 °C
30 seconds*	285 °C

* Stackpack Diodes can be soldered to special customer-designed mounting fixtures. When diode temperature is kept at or less than these ratings, no degradation of diode characteristics occurs.

NOTES:

1. Characteristic values are based on performance tests. These figures may change without notice as a result of additional data or product refinement. For special circuits, factors other than the diode may cause variations from the values shown. Contact the Varian Beverly Division before using this information for final equipment design.
2. Normally controlled to ± 10%, but ± 5% control is available. Diodes having capacitance values other than those shown can be supplied at no extra cost.
3. Measured at -12 volts.
4. Typical operable range, not instantaneous bandwidth.
5. Typical values for use as guidelines in circuit design.
6. Typical values at the midpoint of the specified frequency range. Stackpack Diodes can be operated at full efficiency over a broad range of drive power.
7. With heat sink on cathode end only.
8. With heat sinks on both ends.
9. When ordering, specify case style desired by adding case-style suffix to type number. Example: VAB-811A-2N35. Other case styles can be furnished on special order.

OUTLINE DRAWINGS
CASE STYLES

N35

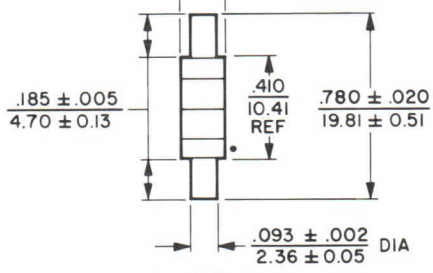

C_p = 0.18 pF
L_s = 0.50 nH

N37

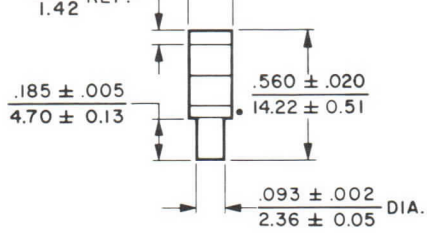

C_p = 0.18 pF
L_s = 0.50 nH

N39

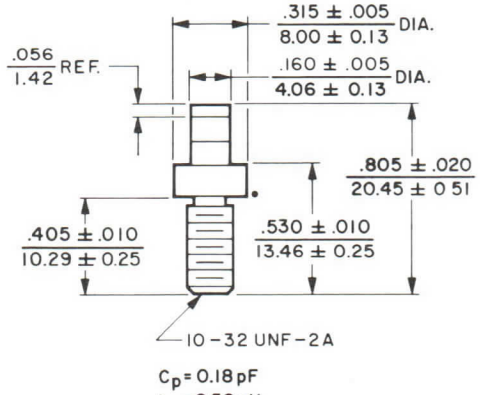

C_p = 0.18 pF
L_s = 0.50 nH

N41

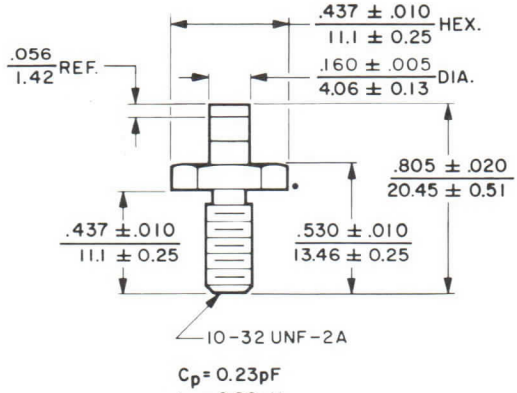

C_p = 0.23 pF
L_s = 0.90 nH

OUTLINE DRAWINGS
CASE STYLES

N43

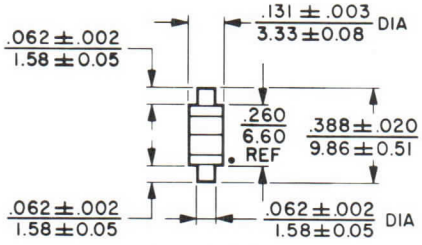

C_p = 0.30 pF
L_s = 0.65 nH

N45

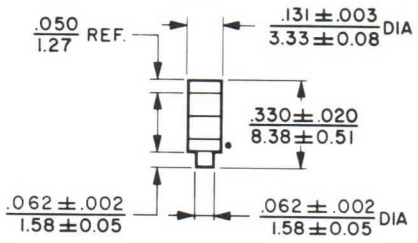

C_p = 0.30 pF
L_s = 0.65 nH

N47

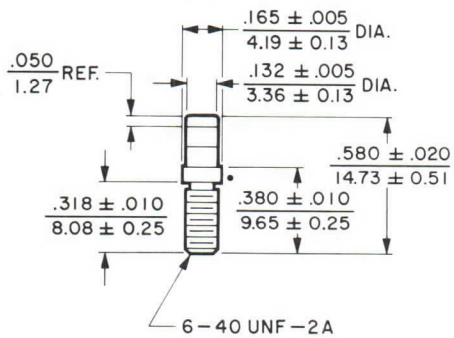

C_p = 0.30 pF
L_s = 0.65 nH

N49

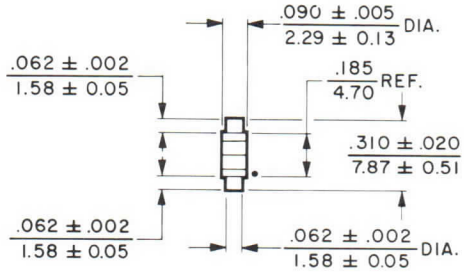

C_p = 0.21 pF
L_s = 0.58 nH

N51

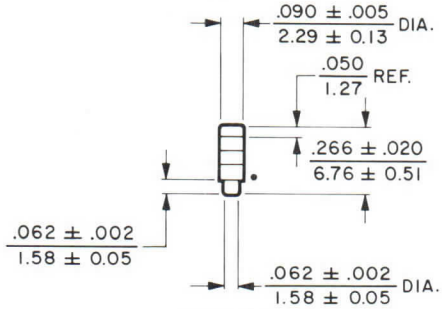

C_p = 0.21 pF
L_s = 0.58 nH

N53

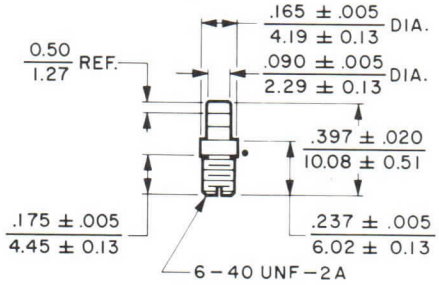

C_p = 0.21 pF
L_s = 0.58 nH

N55

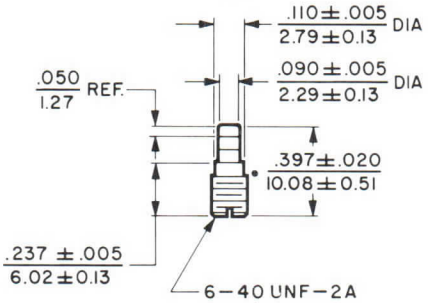

C_p = 0.21 pF
L_s = 0.58 nH

N56

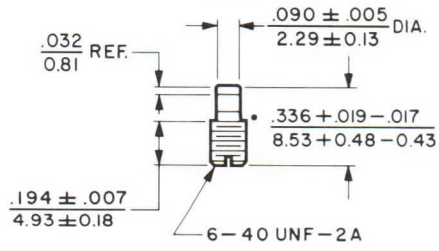

C_p = 0.21 pF
L_s = 0.58 nH

• HEAT SINK END

ALL CASE STYLES CONCENTRIC WITHIN T.I.R. OF .012/0.31 MAX

DIMENSIONS: ← inch / mm →

varian

TECHNICAL DATA

VAB-811A-3 Through VAB-816A-3 Series SUPER-STACKPACK† DIODE

DESCRIPTION

The Varian Super-Stackpack Diode consists of three high-efficiency Super-Power Bimode® Diode chips combined in a series-stacked configuration. Each diode chip is housed in its individual beryllia package and the three packages are then brazed into a single unit. Thus the packages are connected electrically in series and thermally in parallel. Power-handling capability is greater than that of a single diode because each diode junction is larger by the number of units connected in series.

These diodes are designed for frequency multiplication, conversion, and modulation in telemetry and point-to-point microwave transmission applications where high power and efficiency are required. In addition, since these diodes combine the advantage of fast transition time and high breakdown voltage, they are especially suited for high-power step-recovery-multiplier and impulse-generator applications.

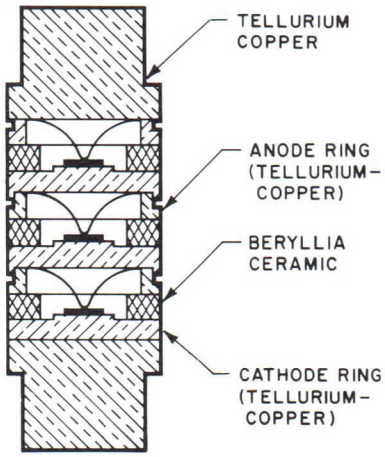

ABSOLUTE RATINGS

Storage Temperature ..... -85 to +200 °C
Operating Temperature ..... -55 to +200 °C
Short Term Temperature,
2 minutes* ..... 235 °C
30 seconds* ..... 285 °C

* Super-stackpack Diodes can be soldered to special customer-designed mounting fixtures. When diode temperature is kept at or less than these ratings, no degradation of diode characteristics occurs.

GENERAL CHARACTERISTICS

ELECTRICAL

Minimum Reverse Breakdown Voltage (V)	Junction Capacitance[2] at - 18 Volts (pF)	Minimum Cutoff Frequency at - 18 Volts (GHz)	Typical Minority Carrier Lifetime (ns)	Maximum Transition Time (ps)	Type Number
240	8.0-10.0	50	160	2,000	VAB-811A-3
240	4.0-5.0	70	130	2,000	VAB-812A-3
180	2.5-3.5	120	60	700	VAB-813A-3
180	1.5-2.5	120	60	500	VAB-814A-3
180	1.0-1.5	140	50	400	VAB-815A-3
135	0.8-1.3	150	30	300	VAB-816A-3

PERFORMANCE

Output Frequency Range[3] (GHz)	Efficiency As A Tripler (%)	Available Output Power[5] (W)	Maximum Thermal Resistance		Case Style[8]	Type Number
			Note 6 (°C/W)	Note 7 (°C/W)		
1.0-2.5	65	50	6	5.0	N36	VAB-811A-3
2.0-4.0	55	30	10	8.0	N36, N44	VAB-812A-3
3.0-5.0	50	15	11	9.0	N36, N44, N50	VAB-813A-3
5.0-8.0	50	10	13	10.5	N36, N44, N50	VAB-814A-3
5.5-9.0	50	8	16	13.0	N44, N50	VAB-815A-3
7.0-9.0	45	7	19	15.0	N44, N50	VAB-816A-3

3658 4/77

† *TM—Varian Associates*

Printed in U.S.A.

OUTLINE DRAWINGS
CASE STYLES

N36

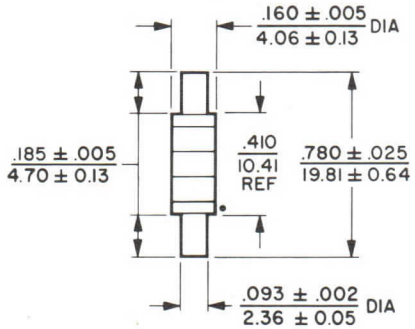

L_s = 0.50 nH C_p = 0.18 pF

N38

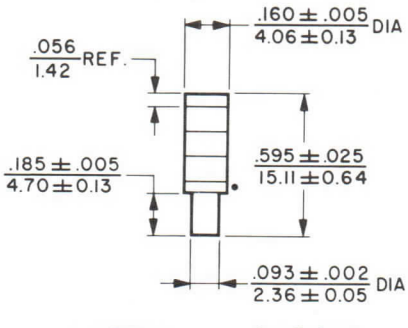

L_s = 0.50 nH C_p = 0.18 pF

N40

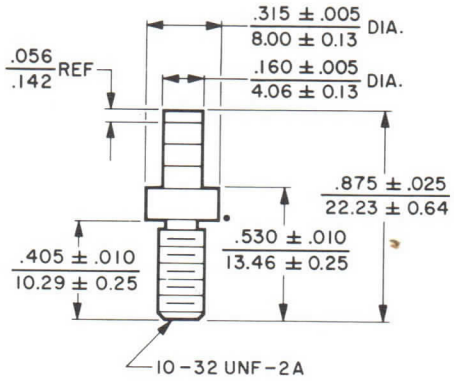

L_s = 1.20nH C_p = 0.22pF

N42

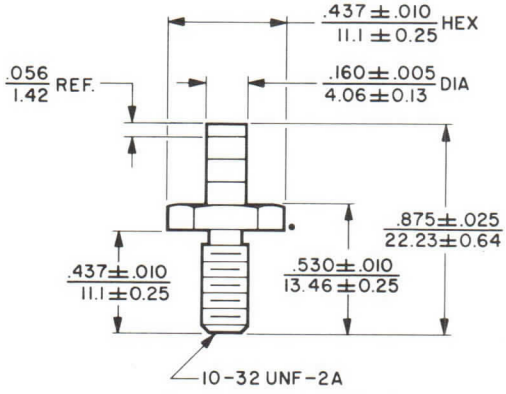

L_s = 1.20 nH C_p = 0.22 pF

N44

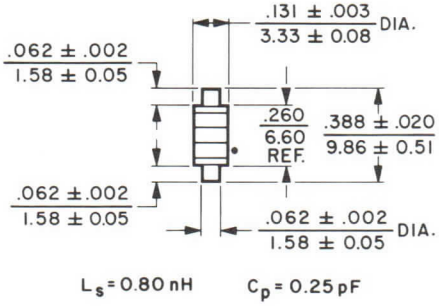

L_s = 0.80 nH C_p = 0.25 pF

N46

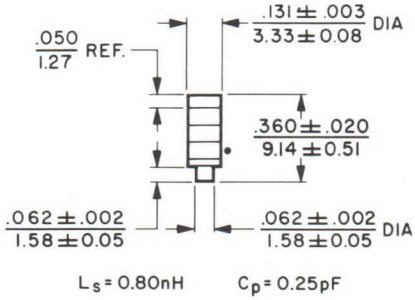

L_s = 0.80nH C_p = 0.25pF

N48

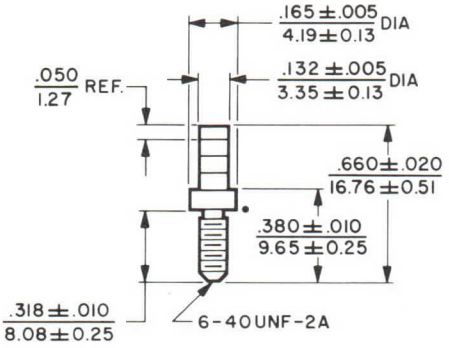

L_s = 0.80 nH C_p = 0.25 pF

N50

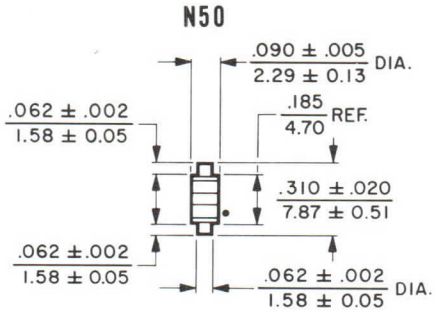

L_s = 0.72nH C_p = 0.21pF

N52

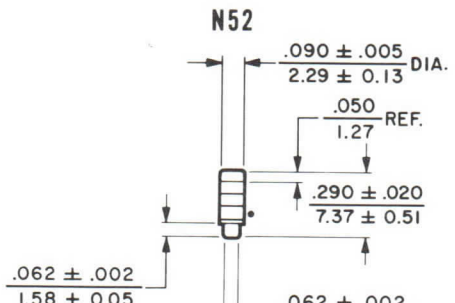

L_s = 0.72nH C_p = 0.21pF

ALL CASE STYLES CONCENTRIC WITHIN A T.I.R OF .012 MAX.

N54

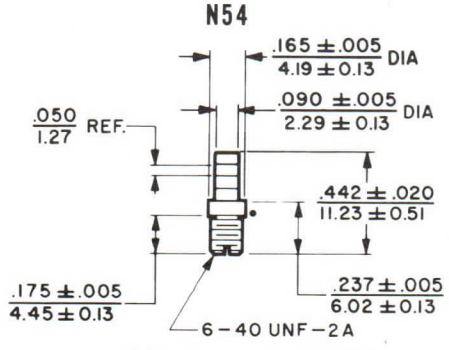

L_s = 0.72nH C_p = 0.21pF

DIMENSIONS: ← inch / mm → •HEAT SINK END

NOTES:

1. Characteristic values are based on performance tests. These values may change without notice as a result of additional data or product refinement. Consult Varian Beverly Division before using this information for final equipment design.
2. Normally controlled to ±10%, but ±5% control is available. Diodes having capacitance values other than those shown can be supplied at no extra cost.
3. Typical operable range, not instantaneous bandwidth.
4. Typical values for use as guidelines in circuit design.
5. Typical values at the midpoint of the specified frequency range. Super Stackpack Diodes can be operated at full efficiency over a broad range of drive power.
6. With heat sink on cathode end only.
7. With heat sinks on both ends.
8. When ordering, specify case style desired by adding case-style suffix to type number. Example: VAB-811A-3N36. Other case styles can be furnished on special order.

varian beverly

TECHNICAL DATA

VAT-1000 Series

HIGH Q PLESA* TUNING VARACTORS

DESCRIPTION

VAT-1000 series tuning diodes are designed to minimize post tuning drift in voltage controlled oscillators (VCO) for Electronic Warfare Systems. After the initial response to a tuning shift, tuning stability depends upon junction capacitance stability with constant reverse bias voltage. The unique processing of these diodes minimizes such capacitance shifts and produces the most stable voltage controlled oscillators possible with tuning diodes.

These high Q PLESA tuning varactors are silicon diodes specially processed to provide the advantages of both planar and mesa methods. The unique PLESA passivation allows planar processing to be applied to surfaces containing silicon mesas.

These diodes have the excellent r-f characteristics of mesa geometry. The extremely high Q permits satisfactory operation at high microwave frequencies and allows tuning over the wide bandwidths needed in applications such as broadband tunable filters and high Q cavities. Especially low leakage currents over wide temperature ranges together with good leakage-current stability provide the frequency and/or phase stability required by the most frequency-stable or broadband tunable transistor, Impatt, or Gunn-effect oscillators. The high production-lot uniformity of the capacitance/voltage characteristic makes these devices ideal for use in phased array systems or in sensitive multiple filters and modules.

Semiconductor production using PLESA passivation yields the high reliability of planar processing inherent within the passivated chips. Final diode fabrication is accomplished with thermally bonded contacts and welded, hermetically sealed cases to provide reliable performance under extremely adverse environmental conditions.

FEATURES

- Ideal for VCOs in EW systems
- Outstanding frequency stability
- High Q — low leakage current
- Capable of high temperature operation

GENERAL CHARACTERISTICS [1]

ELECTRICAL

Reverse Breakdown Voltage .... 45/60 V

Case Capacitance, typical

N9	0.15 pF
N11	0.12 pF
N16 and N20	0.15 pF

Capacitance/Temperature Coefficient, typical [2] ..... 200 ppm/°C

Lead Inductance, typical [3]

N9	0.11 nH
N11	0.22 nH
N16 and N20	0.50 nH

ENVIRONMENTAL

Ambient Temperature Range

Operating	-55 to +175 °C
Storage	-55 to +200 °C

3200 9/74

*Varian Trademark

Printed in U.S.A.

PERFORMANCE CHARACTERISTICS[1]

Total Capacitance at 0 V bias[4] (pF)	Minimum Q[5]	Minimum Total Capacitance[4] Tuning Ratio	Maximum Leakage Current[6] at 25°C (nA)	Maximum Leakage Current[6] at 150°C (nA)	Type Number[7] Conventional Chip Mount	Type Number[7] Inverted Chip Inverted Polarity
45-Volt Series[8]						
2-3	2600	3.5:1	3	400	VAT-1001	VAT-1101
5-8	2000	4.75:1	5	600	VAT-1002	VAT-1102
60-Volt Series[8]						
2-3	2000	4.0:1	3	400	VAT-1003	VAT-1103
5-8	1500	5.5:1	5	600	VAT-1004	VAT-1104

NOTES:

1. Characteristics are based on performance tests. These values may change without notice as a result of additional data or product refinement. Varian Beverly should be consulted before using these data for equipment design.

2. Averaged between -65 and +85°C. Capacitance/Temperature Coefficient is calculated in parts per million per degree Celsius (ppm/°C) from:

$$T_C \text{ Coeff} = \frac{\left[C_T \text{ (at } 85^\circ\text{C)} - C_T \text{ (at } -65^\circ\text{C)}\right] 10^6}{(85 + 65) \quad C_T \text{ (at } 25^\circ\text{C)}}$$

where

C_T = Sum of junction capacitance at -4 volts bias plus case capacitance at a given ambient temperature.

3. Measured with 100 mA forward bias current and 1 GHz test frequency using a coaxial slotted line.

4. Includes case and internal fringing capacitances.

5. Q is calculated from the equation:

$$Q = \frac{1}{2 \pi f R_s C_j}$$

where

f = 50 MHz
R_S = Series resistance
C_j = Junction capacitance

R_S is measured at 1 GHz and -4 V bias using transmission loss technique. C_j is measured at 1 MHz on a Boonton bridge.

6. Measured with a reverse bias voltage equal to 80% of the minimum reverse breakdown voltage.

7. When ordering, specify the case style desired by adding the case designation as a suffix to the type number.
Example: VAT-1001N16
Other case styles can be furnished on special order.

8. The series voltage designation indicates the minimum reverse breakdown voltage at -10 μA.

APPLICATION NOTES

One of the most important concerns in an Electronic Warfare System is post tuning drift—the frequency change occurring in its voltage controlled oscillator (VCO) after the oscillator has been voltage tuned to a new frequency.

The following illustration and discussion define the post tuning drift phenomenon and describe the design considerations and processing techniques which can minimize its magnitude.

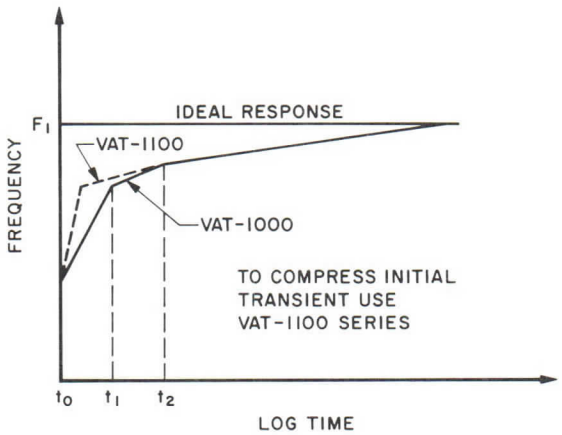

As an example, suppose an oscillator frequency is increased from F_0 to F_1 at $t = 0$ by changing the voltage from V_0 to V_1. Assuming an ideal step-function voltage with no ripple or deviation from voltage V_1, the ideal response would be an instantaneous shift of the oscillator frequency to the frequency F_1, where it would stay until the voltage is changed. This, however, does not happen. The actual VCO frequency response has three distinct time regions.

The first region occurs from the initial switching transient at $t = 0$ to a time which is a few thermal time constants of the diode chip. For a diode mounted in the conventional manner, this would run from approximately $t = 0$ to $t = 100$ microseconds. In this region, the diode junction and chip are reaching a new thermal equilibrium determined by the changing power dissipation in the diode. When changing from voltage V_0 to V_1, the power dissipated in the diode differs in each state and the diode must reach a new equilibrium. The temperature effects of the junction, as manifested through capacitance changes, result in a frequency shift during that thermal transient. This portion can be minimized by inverting the diode so that the thermal time constant is reduced to 200 nanoseconds. This shortens the first interval. Further trimming can be achieved by shaping the voltage pulse to compensate for this phenomenon.

In the second portion of the transient, from t = approximately 100 microseconds out to t = 10 seconds, the frequency shift is somewhat slower. In this time interval, the diode package, leads, and circuit mount are approaching thermal equilibrium. Each of these has a small capacitance shift associated with a change in temperature. Even though these capacitance changes are small, when converted to a frequency shift, relatively large shifts in frequency can be observed. This portion can be minimized by using very small thermal mass packages and exercising good heat sinking practices in oscillator design.

From the end of this second transient t_2 to intervals of 30 minutes or longer, we are in the least understood region of the post tuning drift response. During this period, with constant bias applied to the diode, there are slight changes in capacitance with time. These appear to be due to a reorientation of space charge at the junction surface and in the passivation layer. The magnitude of the effect is very dependent on the diode processing used. In fact, the post tuning drift characteristic in this region is almost a signature of the kind of processing used. The stability observed in the PLESA process is an order of magnitude better than has been observed by any other fabrication process. This solid evidence indicates that the stability obtained with the PLESA process is truly an advance in the state-of-the-art.

Hence, avoiding post tuning drift in voltage controlled oscillators for Electronic Warfare Systems requires a thorough understanding of the requirements and the use of appropriate special design and fabrication techniques, depending on the time window to which these requirements pertain. For some applications, only the close-in transients are very important. However, for other applications, the close-in transients may not be significant but the longer term transients are critical.

OUTLINE DRAWINGS

Case N9

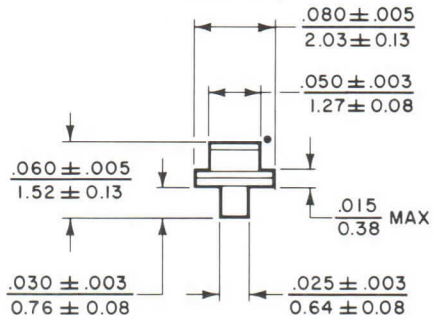

Case N11

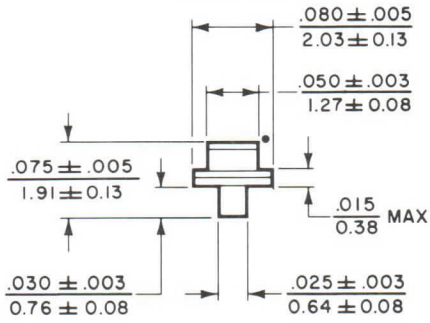

Case N16

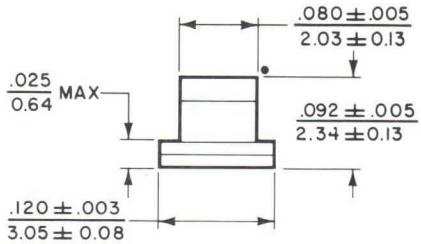

Case N20

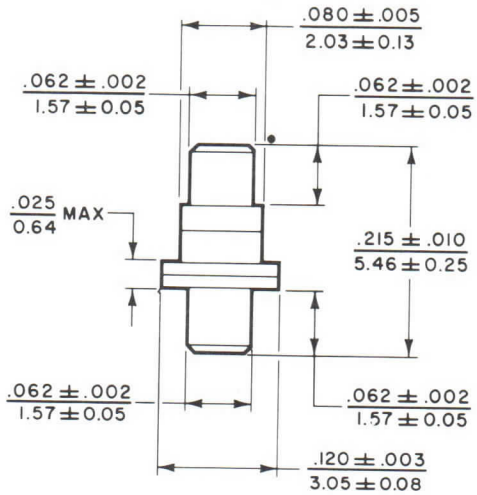

• HEAT SINK END

DIMENSIONS ← inch / mm →

varian beverly

TECHNICAL DATA

VAB-1600 Series

HIGH POWER MULTIPLIER DIODES

DESCRIPTION

VAB-1600 series silicon high-power multiplier diodes feature high-temperature thermal-oxide passivation grown on diode chips having mesa configuration. All-gold contacts are bonded to the chips using the latest thermocompression bonding techniques.

Final packages are hermetically sealed making these diodes capable of meeting the most stringent mechanical and environmental requirements. Fabrication techniques can be modified to provide the various levels of reliability required to meet a wide range of special customer needs.

FEATURES

- 8 Watts Output — 5-8 GHz
- 10 Watts Output — 3-5 GHz
- Efficiences from 1/N to 2/N, where N is multiplication factor
- Rugged Package Design
- High-Frequency Capability
- Low Transition Time
- Low Thermal Resistance
- Low Package Parasitics

GENERAL CHARACTERISTICS[1]

Output Frequency Range[2] (GHz)	Output Power[3] (W)	Minimum Reverse Breakdown Voltage (V)	Junction Capacitance[4] at -6 V (pF)	Typical Minority Carrier Lifetime (ns)	Maximum Transition Time (ps)	Thermal Resistance (°C/W)	Efficiency As A Tripler[5] (%)	Case Styles	Type Number[6]
0.5-1	60	180	8-12	200	800	3	65	N26, N28, N29	VAB-1610A
1-3	20	160	5-8	150	600	8	60	N26, N28, N29	VAB-1612A
3-5	10	120	3-5	100	400	10	55	N26, N28, N29	VAB-1613A
5-8	8	100	1.5-3.0	60	250	8	50	N20, N22	VAB-1614A
6-9	6	80	1.0-1.5	30	200	15	45	N20, N22	VAB-1616A
5-8	5	70	1.0-1.5	20	150	20	45	N20, N22	VAB-1625
8-12	3	60	0.5-1.0	18	100	25	40	N20, N22	VAB-1605
10-15	2	50	0.3-0.5	10	80	30	50 doubler	N20, N22	VAB-1606

ABSOLUTE RATINGS

Storage Temperature ..... -85 to +200 °C
Operating Temperature ..... -55 to +175 °C
Short Term Temperature,
2 minutes* ..... 250 °C
30 seconds* ..... 285 °C

*Diodes can be soldered to special customer-designed mounting fixtures. If the diode temperature is kept at or less than these ratings, no degradation of diode characteristics will occur.

3259 8/74

Printed in U.S.A.

CHARACTERISTIC CURVES
Typical performance values

VAB-1614AN26 TRANSFER CHARACTERISTICS AS A 5-8 GHz TRIPLER

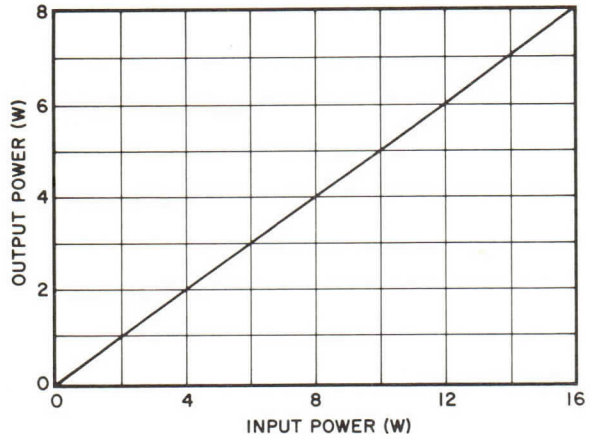

VAB-1606N20 TRANSFER CHARACTERISTICS AS A 10-15 GHz DOUBLER

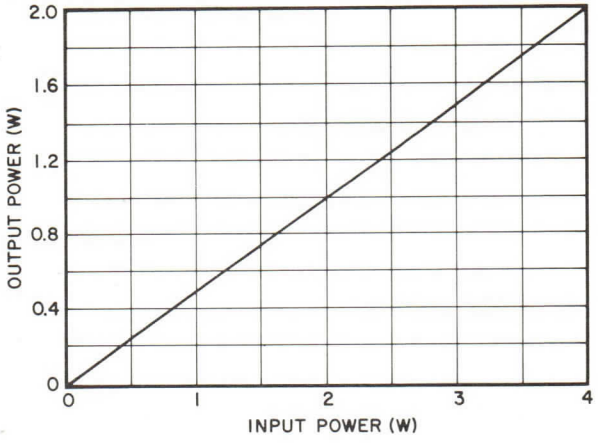

NOTES:

1. Characteristic values are based on performance tests and include circuit losses amounting to about 1.5 dB. These figures may change without notice as a result of additional data or product refinement. For special circuits, factors other than the diode may cause variations from the values shown. Contact Varian Beverly before using this information for equipment design.
2. Operable range, not instantaneous bandwidth.
3. Typical values at the midpoint of the specified frequency range. VAB-1600 diodes can be operated at full efficiency over a broad range of drive power.
4. Normally controlled to ±10%, but ±3% control is available. Diodes having capacitance values other than those shown can be supplied at no extra cost.
5. Typical values at the midpoint of the specified frequency range for use as guidelines in circuit design. These diodes can be used for multiplication orders from 2 to 6.
6. When ordering, specify the case style desired by adding the suffix N20, N22, N26, N28 or N29 to the type designation. Example: VAB-1613AN26.

OUTLINE DRAWINGS

Case N20

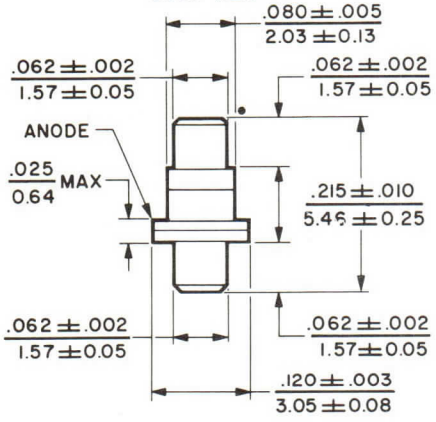

Case N22

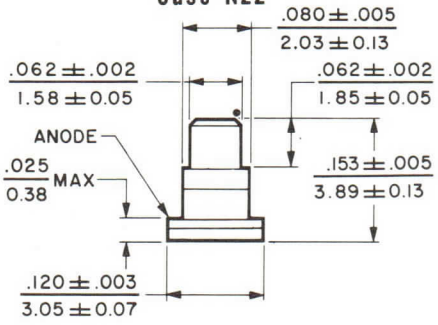

Case N26

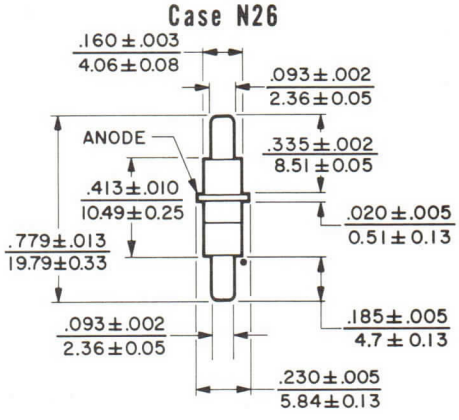

Case N28

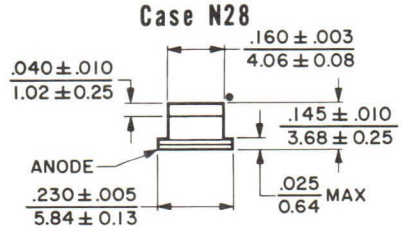

Case N29

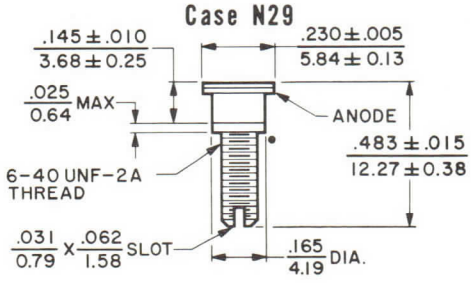

DIMENSIONS ← inch / mm →

• HEAT SINK END

varian

TECHNICAL DATA

VAB-3200
Series

HIGH POWER
MULTIPLIER DIODES

FEATURES

- 30 Watts output — 3 GHz
- 5 Watts output — 10 GHz
- Rugged package design
- High-frequency capability
- Low transition time
- Low thermal resistance
- Low package parasitics
- Cylindrical symmetry for efficient coupling to rf fields
- Designs for both high and low order multiplication

DESCRIPTION

VAB-3200 series silicon high-power multiplier diodes feature mesa geometry diode chips with thermal-oxide passivation. Each unit has three chips electrically in series and thermally in parallel. This series provides cylindrical symmetry through the use of flangeless packages and incorporates pure gold internal leads, thermo-compression bonded to gold contacts. All devices are inspected throughout processing to insure complete compliance with MIL-STD reliability screening procedures. All packages are hermetically sealed, making these diodes capable of meeting the most stringent mechanical and environmental requirements. High reliability screening programs can be provided to fulfill specific reliability needs.

GENERAL CHARACTERISTICS[1]

Typical Output Frequency (GHz)	Output Power (W)	Minimum Reverse Breakdown Voltage (V)	Junction Capacitance[2] at -6 V (pF)	Typical Minority Carrier Lifetime (ns)	Maximum Transition Time (ps)	Thermal Resistance (°C/W)	Typical Efficiency[3] (%)	Type Number
3	30	240	2.0-3.0	100	1000	6	65 (x 2)	VAB-3203 N100
4	25	210	1.5-2.5	90	750	7	65 (x 2)	VAB-3204 N100
5	20	180	1.0-2.0	75	400	8	65 (x 2)	VAB-3214 N100
6	10	180	0.6-0.9	75	400	10	60 (x 2)	VAB-3215 N99
8	8	150	0.6-0.9	25	200	12	50 (x 3)	VAB-3225 N99
10	5	120	0.5	18	150	16	50 (x 2)	VAB-3205 N99
6	3	120	0.7-0.9	16	90	12	20 (x 5)	VAB-3241 N99
8	2	90	0.6-0.8	11	70	15	20 (x 5)	VAB-3231 N99
10	1	60	0.5-0.7	9	50	20	20 (x 5)	VAB-3221 N99

ABSOLUTE RATINGS[4]

Storage Temperature ..... -85 to +200 °C
Operating Temperature ..... -55 to +175 °C

Short Term Temperature
2 minutes[5] ..... 250 °C
30 seconds[5] ..... 285 °C

3552 8/76

Printed in U.S.A.

CHARACTERISTIC CURVES
Typical performance values

VAB-3214N100 TRANSFER CHARACTERISTICS

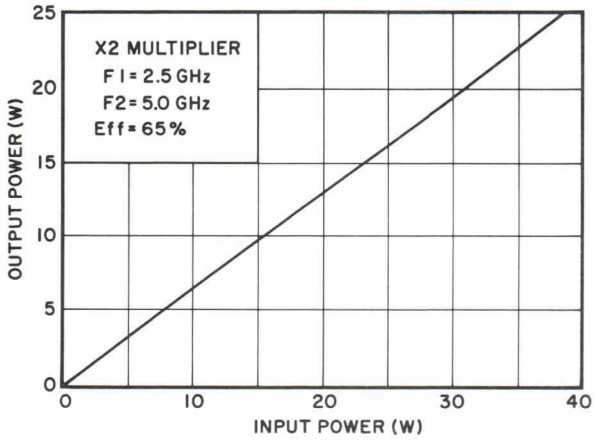

VAB-3231N99 TRANSFER CHARACTERISTICS

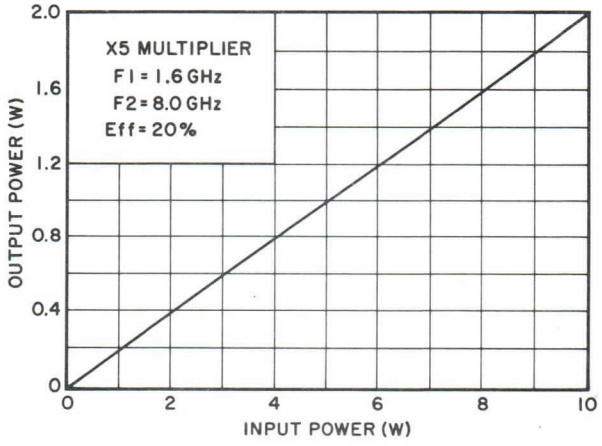

NOTES:

1. Characteristic values are based on performance tests and include circuit losses amounting to about 1.5 dB. These figures may change without notice as a result of additional data or product refinement. For special circuits, factors other than the diode may cause variations from the values shown. Contact Varian Beverly before using this information for equipment design.

2. Normally controlled to ±10%, but ±3% control is available. Diodes having capacitance values other than those shown can be supplied at no extra cost.

3. Typical values at the specified frequency. VAB-3200 diodes can operate at the values shown over a broad range of drive power. These diodes can be used for multiplication orders from 2 to 5.

4. Ratings should not be exceeded under continuous or transient conditions. Equipment design should limit environmental variations so that the absolute ratings will never be exceeded.

5. Diodes can be soldered to special customer-designed mounting fixtures. If the diode temperature is kept at or less than these ratings, no degradation of diode characteristics will occur.

OUTLINE DRAWINGS

Case N99

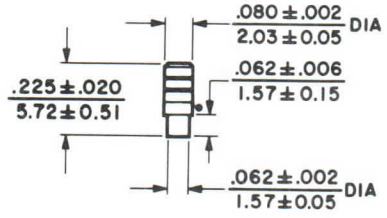

Case N100

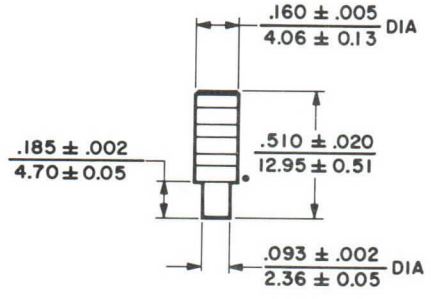

•HEAT SINK END

DIMENSIONS: ← inch / mm →

TYPICAL EQUIVALENT CIRCUIT OF CASE PARASITICS

Case N99

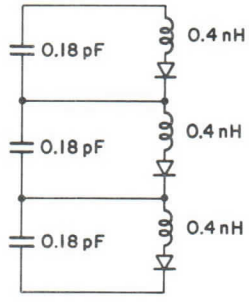

Case N100

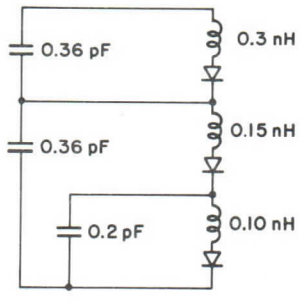

varian

TECHNICAL DATA

9250 Series

GALLIUM ARSENIDE IMPATT DIODES 6.0-12.4 GHz

DESCRIPTION

Varian gallium-arsenide (GaAs) IMPATT diodes are solid-state devices for converting low-voltage, d-c power directly to microwave-frequency power. They deliver 1 to 3 watts of CW power at frequencies between 6 and 12.4 gigahertz. Easily incorporated in any resonant microwave structure (waveguide, coaxial, stripline or microstrip), these diodes produce reliable power for a wide variety of microwave applications. They are ideal for use as transmitter oscillators in communication, radar, and beacon equipment and as amplifiers for communication, radar and EW systems.

FEATURES

- High CW output power
- Low voltage operation
- Operation from 6.0 to 12.4 GHz
- High reliability
- High efficiency
- Low thermal resistance

QUALITY ASSURANCE

Each wafer used to make production diodes is subjected to extensive evaluation. Sample diodes are assembled from each wafer and r-f and d-c parameters of each diode are measured and recorded.

To assure reliable diode operation, d-c bias is applied while each diode is subjected to 3 temperature cycles from -195°C to +100°C. After temperature cycling, all diodes are thoroughly leak tested. Then each sample diode is burned-in at rated d-c bias for 72 hours at a heat sink temperature of +71°C.

Each production diode is subjected to a 72-hour burn-in at a heat sink temperature of 45°C with full rated current and operating voltage. Each diode is tested for r-f power output at a customer-specified frequency. Efficiency of each diode is calculated to assure that minimum efficiency specifications are met.

GENERAL CHARACTERISTICS[1]

Frequency Range[2,3] (GHz)	Minimum Output Power[2,4] (W)	Bias Voltage[5]		Bias Current		Minimum Efficiency (%)	Type Number[6,7]
		Min (Vdc)	Max (Vdc)	Min (mAdc)	Max (mAdc)		
6-8	1	45	60	140	180	12	VSC-9250S1
6-8	2	45	60	220	350	15	VSC-9250S2
8-12.4	1	30	55	150	260	12	VSX-9250S1
8-12.4	2	30	55	250	400	15	VSX-9250S2
8-12.4	3	30	55	300	650	15	VSX-9250S3

ENVIRONMENTAL

Ambient Temperature Range
Operating* ..... -54 to +71 °C
Storage ..... -54 to +125 °C

Thermal Resistance ..... 12 to 18 °C/W

*Wider ranges of operating temperature are available on special order.

3596 10/76

Printed in U.S.A.

9250 GALLIUM ARSENIDE IMPATT DIODES

NOTES:

1. Characteristics and curves are based on performance tests at a heat sink temperature of 25° C. These values may change without notice as a result of additional data or product refinement. Consult the Varian Solid State West Division before using this information for final equipment design.

2. Output power is measured in a Varian critically-coupled cavity at a heat sink temperature of 25°C and at a customer specified fixed frequency.

3. Ku-band and higher power C-band diodes are currently under development. Contact the Varian Solid State West Division for information on these diodes.

4. Higher pulsed power diodes are available on special order.

5. The bias voltages specified for each diode represent the range of voltage required to cover a particular power level and frequency band. Bias voltage decreases as frequency increases.

6. Standard case styles are the N23 and N33. On special order, diodes can be furnished in N20, N21, or N57 case styles.

7. The suffixes "S1" and "S2" denote output power. The suffix "N23", "N33", etc. denotes diode case style. They are used for quoting and ordering purposes. When an order is received at Varian, e.g. VSX-9250S1N33, a two-letter suffix is assigned, e.g. VSX-9250AB, to identify the customer and the exact specification requirements.

OUTLINE DRAWINGS

N20 Case

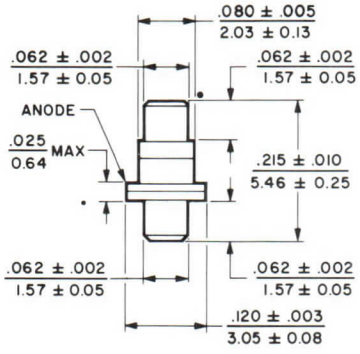

Ls = 0.50 nH Cp = 0.14 pF

N21 Case

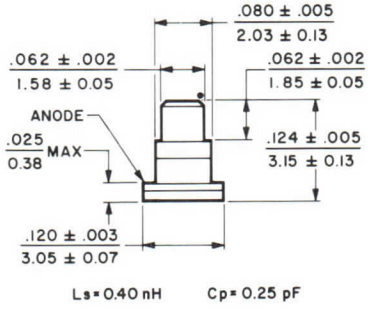

Ls = 0.40 nH Cp = 0.25 pF

N23 Case

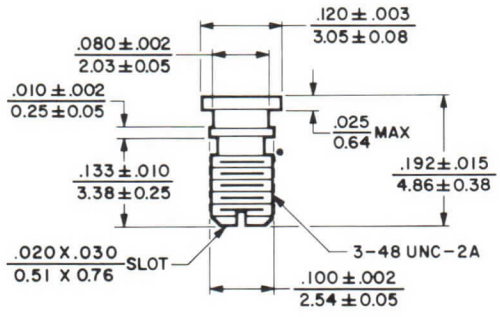

N33 Case

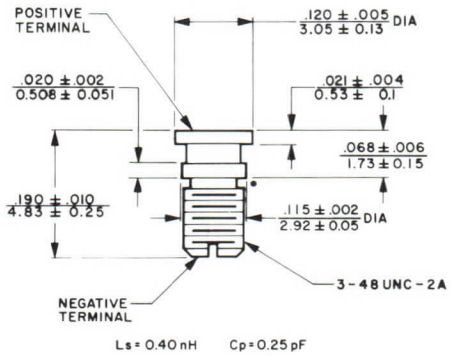

Ls = 0.40 nH Cp = 0.25 pF

N57 Case

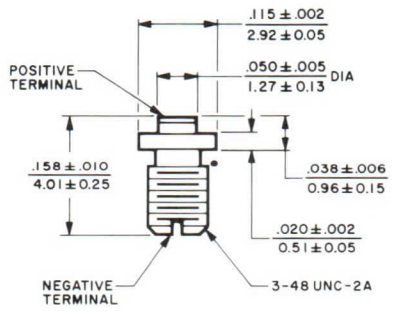

Ls = 0.20 nH Cp = 0.17 pF

• HEAT SINK END

DIMENSIONS: ← inch / mm →

The operating point for a predetermined median life can be determined by the following equation:

$$T_j = (V_o I_o - P_{rf}) R_{th} + T_{hs}$$

where

T_j = Junction temperature
V_o = Operating voltage
I_o = Operating current
P_{rf} = RF output power
R_{th} = Thermal resistance
T_{hs} = Heat sink temperature

Junction temperature can be related to median life by the data in Figure 4. Although device performance may improve above this operating point, it will be at the expense of long term reliability.

Device thermal resistances are measured using the Haitz* technique and include the thermal resistance of the package mounted in a threaded OFHC copper heat sink. In designing the circuit, efforts should be made to provide a carefully machined surface and threaded hole for the diode heat sink to maintain the rated thermal resistance.

BIAS CIRCUIT AND POWER SUPPLY

Experimental studies on GaAs and Si IMPATT bias circuit impedance have demonstrated the existance of negative resistance down to low frequencies. If the bias circuit is resonant or unstable under this type of load condition, large amplitude oscillations can be sustained which will be up-converted as noise or will destroy the diode. Shunt capacitance is likely to encourage this condition.

The bias network can be made unconditionally stable by the addition of a positive series resistance (approximately 100 Ω) or by more sophisticated non-dissipative networks.‡ Also, once r-f tuning conditions have been established which avoid overcoupling and mode hops, this suppression can be reduced to quite small values without incurring bias oscillation.

Power supplies should provide both voltage and current limiting to protect the diode against large voltage or current excursions. These can occur during tuning if the diode drops out of oscillation or jumps frequency due to improper load conditions. This situation normally does not result in device failure if suitable power supply limits are used and the circuit is optimized before applying full input power to the diode.

RF CIRCUIT

GaAs high efficiency IMPATT diodes can be used effectively in coaxial, waveguide, or microstrip circuits if a few basic precautions are observed.

The circuit should be designed to present the proper large signal impedance at the diode reference plane. (See Figure 1.) It should be free from multiple resonances which could cause frequency hops. The circuit load resistance should be slightly above the value required to critically couple to the diode. Finally, large circuit tuning adjustments should not be made with full power applied to the diode. The operating frequency should be adjusted at lower input levels. Then increase bias and adjust the coupling to achieve the desired output power.

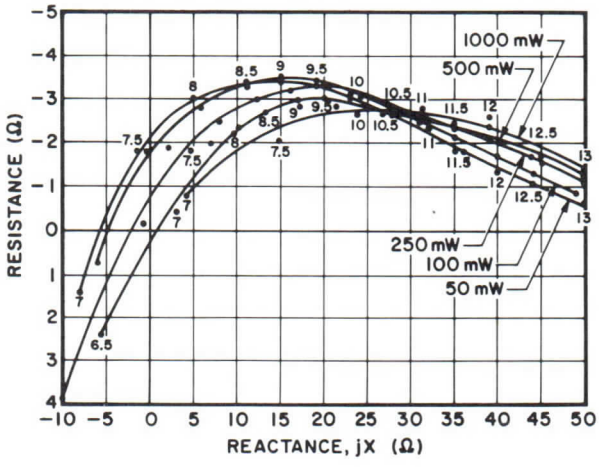

Figure 1 Typical large signal impedance, including mount inductance, of a VSX-9250S2N33 IMPATT diode. Points represent test data at specific frequencies.

NOISE

Grown-junction hi-lo diodes were evaluated as free-running and injection-locked oscillators in

* R.H. Haitz, H.L. Stover and N.J. Tolar, "A Method for Heat Flow Resistance Measurement in Avalanche Diodes", IEEE Trans. on Elect. Dev. ED-16, 438-444 (1969).

‡ C.A. Brackett, "The Elimination of Tuning Induced Burnout and Bias Circuit Oscillations in IMPATT Oscillators", Bell System Technical Journal 52, 271-307 (1973).

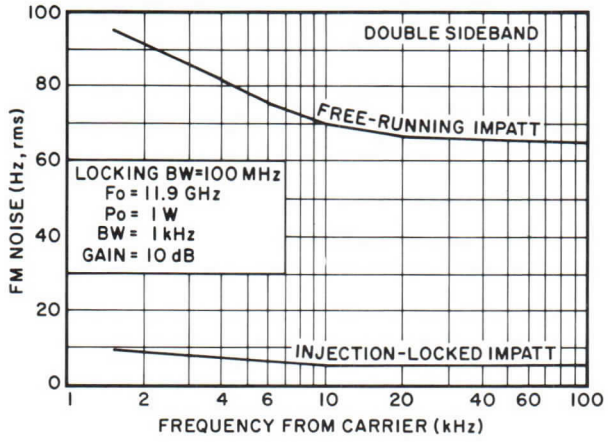

Figure 2 Typical FM noise characteristics of free-running and injection-locked GaAs IMPATT diodes.

the CW mode to determine their noise performance. FM noise in Hz rms is plotted as a function of baseband frequency in Figure 2. The injection-locked result represents the FM noise characteristic of a high-Q Gunn driver, since measurements could only be made close to the carrier. Corresponding AM noise data is shown in Figure 3.

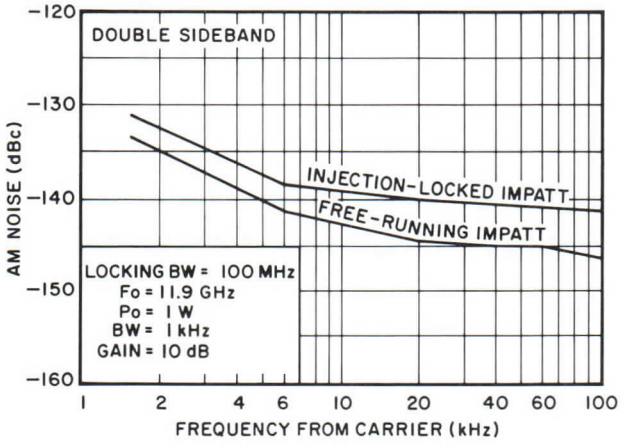

Figure 3 Typical AM noise characteristics of free-running and injection-locked GaAs IMPATT diodes.

When operated in the injection-locked oscillator mode, total AM and FM noise contributions were measured 30 MHz from the carrier. Varian GaAs single drift CW devices achieved a noise measure of 45.1 dB with a locking gain of 18.9 dB and an output power of 31.9 dBm. Contrary to results observed with flat profile Si devices, noise measure tended to decrease as a function of r-f voltage.

RELIABILITY

Reliability of GaAs p-n junction IMPATTs has been determined through statistical analysis of data collected during accelerated stress tests. Groups of devices under test were placed in furnaces having a hydrogen atmosphere and were removed only for tests at appropriate intervals. The four temperatures used for this experiment were 290°C, 300°C, 330°C, and 350°C and a regulation of approximately ± 1°C was maintained. Device failure is defined as either a reverse bias leakage current of 15 mA at a voltage just below breakdown or a shift in breakdown voltage of 20%.

Assuming a normal distribution of data at any given temperature, a log-normal plot was employed to determine the median failure time (MTTF) and variance (σ^2). An Arrhenius plot was constructed using this data. Extrapolation of this data to lower temperatures was achieved by performing a least squares fit where each deviation was weighted by a factor indicative of the relative degree of certainty at each data point (i.e. the variance, σ^2).

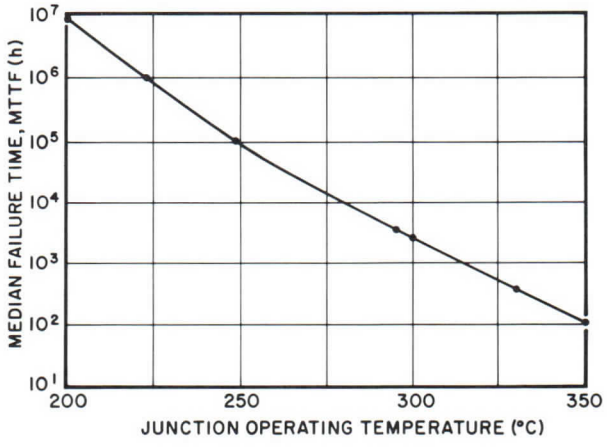

Figure 4 Median failure time variation with junction operating temperature for Varian GaAs IMPATT diodes.

A median lifetime of 10^5 hours is indicated for a junction temperature of 249°C and 10^7 hours at 198°C. Devices subjected to a d-c burn-in at 7-10 W input levels have accumulated 7,500 hours each without a single device-related failure.

ENVIRONMENTAL CAPABILITY

Varian GaAs IMPATT diodes are capable of meeting the following MIL-STD-750 Specification requirements under the test conditions noted.

Test	MIL-STD-750 Reference	Test Conditions
Steady State Operating Life	1026.1	1000 hours minimum operating time at reverse power, P_R to raise T_J to maximum rated value
High Temperature Life	1031.1	1000 hours minimum storage time at 125°C
Physical Dimensions	2066	Device profile at 20X
Solderability	2026	Sn 60, Pb 40, solder at 230°C
Temperature Cycling	1051.1 Cond. B	5 cycles from -55°C to +125°C, 0.5 hour at extremes, 5 minute transfer
Thermal Shock	1056.1	5 cycles from 0°C to +100°C, 3 second transfer
Moisture Resistance	1021.1	10 days, 90-98% RH, -10°C to +65°C, nonoperating
Shock	2016.1	5 blows each X_1, Y_1, Y_2, 1500 G, 0.5 ms pulse
Vibration Fatigue	2046	32 ± 8 hours each X, Y, Z, 96 hour total, 60 Hz, 20 G min.
Vibration Variable Frequency	2056	Four, 4-minute cycles each X, Y, Z, at 20 G min., 100 to 2000 Hz
Constant Acceleration	2006	1 minute each X_1, Y_1, Y_2, at 20,000 G
Terminal Strength	2036.1 Cond. E	Stud package — 2 pounds for 3 s, 120° apart
Salt Atmosphere	1041.1	35° fog for 24 hours

APPLICATION NOTES

High-efficiency GaAs IMPATT diodes achieve excellent reliability when properly designed and the correct operating conditions are applied. Varian GaAs IMPATT diodes use a grown-junction, Read-type structure which effectively eliminates the short term failure modes commonly observed on Schottky-barrier Read devices. High temperature, accelerated lifetest studies predict an MTTF of 10^7 hours at a junction temperature of 200°C. To realize this potentially long life, the following precautions should be taken when designing the circuit and operating the device.

JUNCTION TEMPERATURE

Accelerated lifetest studies show that device operating life varies inversely with the device operating temperature. It is important that the proper operating bias level is chosen correctly and that the heat sink heat-flow path is designed to minimize thermal resistance.

9250 GALLIUM ARSENIDE IMPATT DIODES

varian

TECHNICAL DATA

9250 Series

GALLIUM ARSENIDE IMPATT DIODES 6.0-12.4 GHz

DESCRIPTION

Varian gallium-arsenide (GaAs) IMPATT diodes are solid-state devices for converting low-voltage, d-c power directly to microwave-frequency power. They deliver 1 to 3 watts of CW power at frequencies between 6 and 12.4 gigahertz. Easily incorporated in any resonant microwave structure (waveguide, coaxial, stripline or microstrip), these diodes produce reliable power for a wide variety of microwave applications. They are ideal for use as transmitter oscillators in communication, radar, and beacon equipment and as amplifiers for communication, radar and EW systems.

FEATURES

- High CW output power
- Low voltage operation
- Operation from 6.0 to 12.4 GHz
- High reliability
- High efficiency
- Low thermal resistance

QUALITY ASSURANCE

Each wafer used to make production diodes is subjected to extensive evaluation. Sample diodes are assembled from each wafer and r-f and d-c parameters of each diode are measured and recorded.

To assure reliable diode operation, d-c bias is applied while each diode is subjected to 3 temperature cycles from -195°C to +100°C. After temperature cycling, all diodes are thoroughly leak tested. Then each sample diode is burned-in at rated d-c bias for 72 hours at a heat sink temperature of +71°C.

Each production diode is subjected to a 72-hour burn-in at a heat sink temperature of 45°C with full rated current and operating voltage. Each diode is tested for r-f power output at a customer-specified frequency. Efficiency of each diode is calculated to assure that minimum efficiency specifications are met.

GENERAL CHARACTERISTICS[1]

Frequency Range[2,3] (GHz)	Minimum Output Power[2,4] (W)	Bias Voltage[5]		Bias Current		Minimum Efficiency (%)	Type Number[6,7]
		Min (Vdc)	Max (Vdc)	Min (mAdc)	Max (mAdc)		
6-8	1	45	60	140	180	12	VSC-9250S1
6-8	2	45	60	220	350	15	VSC-9250S2
8-12.4	1	30	55	150	260	12	VSX-9250S1
8-12.4	2	30	55	250	400	15	VSX-9250S2
8-12.4	3	30	55	300	650	15	VSX-9250S3

ENVIRONMENTAL

Ambient Temperature Range
Operating* ..... -54 to +71 °C
Storage ..... -54 to +125 °C

Thermal Resistance ..... 12 to 18 °C/W

*Wider ranges of operating temperature are available on special order.

3596 10/76

Printed in U.S.A.

9250 GALLIUM ARSENIDE IMPATT DIODES

NOTES:

1. Characteristics and curves are based on performance tests at a heat sink temperature of 25° C. These values may change without notice as a result of additional data or product refinement. Consult the Varian Solid State West Division before using this information for final equipment design.

2. Output power is measured in a Varian critically-coupled cavity at a heat sink temperature of 25°C and at a customer specified fixed frequency.

3. Ku-band and higher power C-band diodes are currently under development. Contact the Varian Solid State West Division for information on these diodes.

4. Higher pulsed power diodes are available on special order.

5. The bias voltages specified for each diode represent the range of voltage required to cover a particular power level and frequency band. Bias voltage decreases as frequency increases.

6. Standard case styles are the N23 and N33. On special order, diodes can be furnished in N20, N21, or N57 case styles.

7. The suffixes "S1" and "S2" denote output power. The suffix "N23", "N33", etc. denotes diode case style. They are used for quoting and ordering purposes. When an order is received at Varian, e.g. VSX-9250S1N33, a two-letter suffix is assigned, e.g. VSX-9250AB, to identify the customer and the exact specification requirements.

OUTLINE DRAWINGS

N20 Case

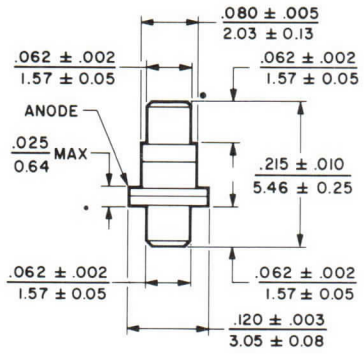

Ls = 0.50 nH Cp = 0.14 pF

N21 Case

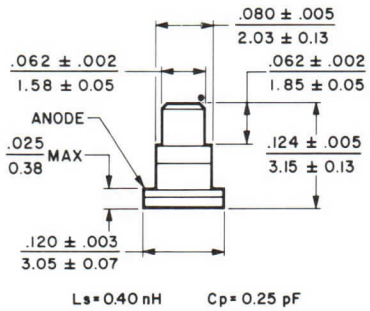

Ls = 0.40 nH Cp = 0.25 pF

N23 Case

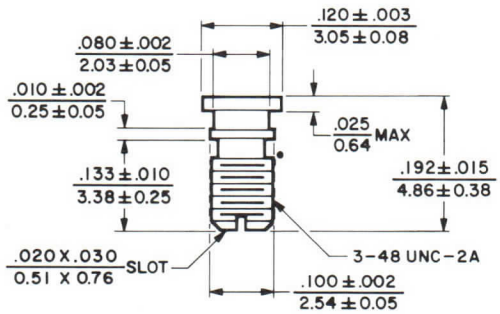

N33 Case

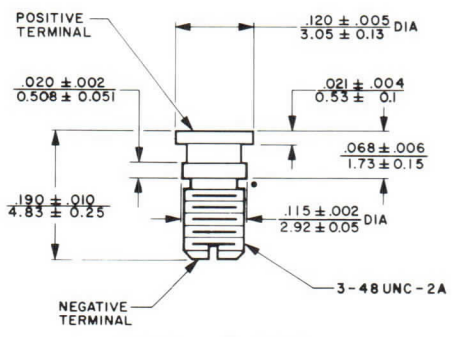

Ls = 0.40 nH Cp = 0.25 pF

N57 Case

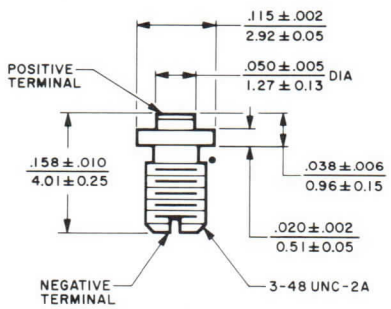

Ls = 0.20 nH Cp = 0.17 pF

• HEAT SINK END

DIMENSIONS: ← inch / mm →

The operating point for a predetermined median life can be determined by the following equation:

$$T_j = (V_o I_o - P_{rf}) R_{th} + T_{hs}$$

where

T_j = Junction temperature
V_o = Operating voltage
I_o = Operating current
P_{rf} = RF output power
R_{th} = Thermal resistance
T_{hs} = Heat sink temperature

Junction temperature can be related to median life by the data in Figure 4. Although device performance may improve above this operating point, it will be at the expense of long term reliability.

Device thermal resistances are measured using the Haitz* technique and include the thermal resistance of the package mounted in a threaded OFHC copper heat sink. In designing the circuit, efforts should be made to provide a carefully machined surface and threaded hole for the diode heat sink to maintain the rated thermal resistance.

BIAS CIRCUIT AND POWER SUPPLY

Experimental studies on GaAs and Si IMPATT bias circuit impedance have demonstrated the existance of negative resistance down to low frequencies. If the bias circuit is resonant or unstable under this type of load condition, large amplitude oscillations can be sustained which will be up-converted as noise or will destroy the diode. Shunt capacitance is likely to encourage this condition.

The bias network can be made unconditionally stable by the addition of a positive series resistance (approximately 100 Ω) or by more sophisticated non-dissipative networks.‡ Also, once r-f tuning conditions have been established which avoid overcoupling and mode hops, this suppression can be reduced to quite small values without incurring bias oscillation.

Power supplies should provide both voltage and current limiting to protect the diode against large voltage or current excursions. These can occur during tuning if the diode drops out of oscillation or jumps frequency due to improper load conditions. This situation normally does not result in device failure if suitable power supply limits are used and the circuit is optimized before applying full input power to the diode.

RF CIRCUIT

GaAs high efficiency IMPATT diodes can be used effectively in coaxial, waveguide, or microstrip circuits if a few basic precautions are observed.

The circuit should be designed to present the proper large signal impedance at the diode reference plane. (See Figure 1.) It should be free from multiple resonances which could cause frequency hops. The circuit load resistance should be slightly above the value required to critically couple to the diode. Finally, large circuit tuning adjustments should not be made with full power applied to the diode. The operating frequency should be adjusted at lower input levels. Then increase bias and adjust the coupling to achieve the desired output power.

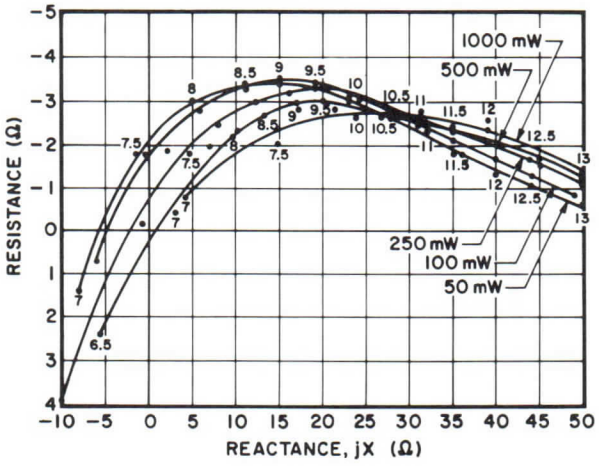

Figure 1 Typical large signal impedance, including mount inductance, of a VSX-9250S2N33 IMPATT diode. Points represent test data at specific frequencies.

NOISE

Grown-junction hi-lo diodes were evaluated as free-running and injection-locked oscillators in

* R.H. Haitz, H.L. Stover and N.J. Tolar, "A Method for Heat Flow Resistance Measurement in Avalanche Diodes", IEEE Trans. on Elect. Dev. ED-16, 438-444 (1969).

‡ C.A. Brackett, "The Elimination of Tuning Induced Burnout and Bias Circuit Oscillations in IMPATT Oscillators", Bell System Technical Journal 52, 271-307 (1973).

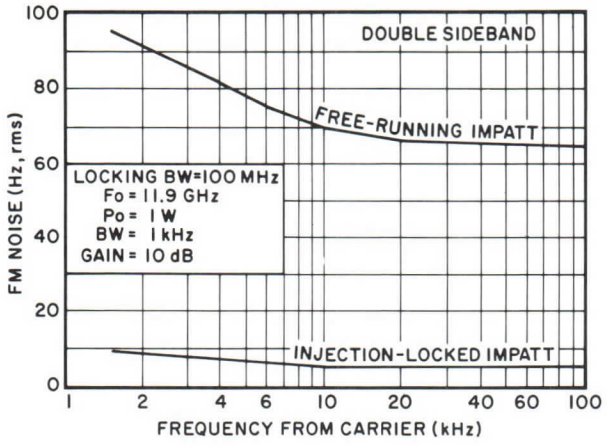

Figure 2 Typical FM noise characteristics of free-running and injection-locked GaAs IMPATT diodes.

the CW mode to determine their noise performance. FM noise in Hz rms is plotted as a function of baseband frequency in Figure 2. The injection-locked result represents the FM noise characteristic of a high-Q Gunn driver, since measurements could only be made close to the carrier. Corresponding AM noise data is shown in Figure 3.

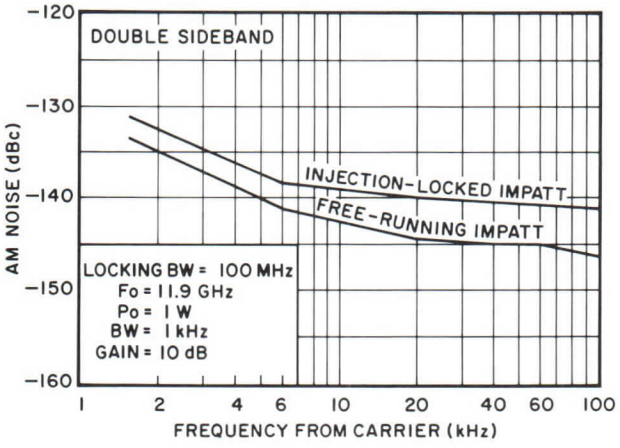

Figure 3 Typical AM noise characteristics of free-running and injection-locked GaAs IMPATT diodes.

When operated in the injection-locked oscillator mode, total AM and FM noise contributions were measured 30 MHz from the carrier. Varian GaAs single drift CW devices achieved a noise measure of 45.1 dB with a locking gain of 18.9 dB and an output power of 31.9 dBm. Contrary to results observed with flat profile Si devices, noise measure tended to decrease as a function of r-f voltage.

RELIABILITY

Reliability of GaAs p-n junction IMPATTs has been determined through statistical analysis of data collected during accelerated stress tests. Groups of devices under test were placed in furnaces having a hydrogen atmosphere and were removed only for tests at appropriate intervals. The four temperatures used for this experiment were 290°C, 300°C, 330°C, and 350°C and a regulation of approximately ± 1°C was maintained. Device failure is defined as either a reverse bias leakage current of 15 mA at a voltage just below breakdown or a shift in breakdown voltage of 20%.

Assuming a normal distribution of data at any given temperature, a log-normal plot was employed to determine the median failure time (MTTF) and variance (σ^2). An Arrhenius plot was constructed using this data. Extrapolation of this data to lower temperatures was achieved by performing a least squares fit where each deviation was weighted by a factor indicative of the relative degree of certainty at each data point (i.e. the variance, σ^2).

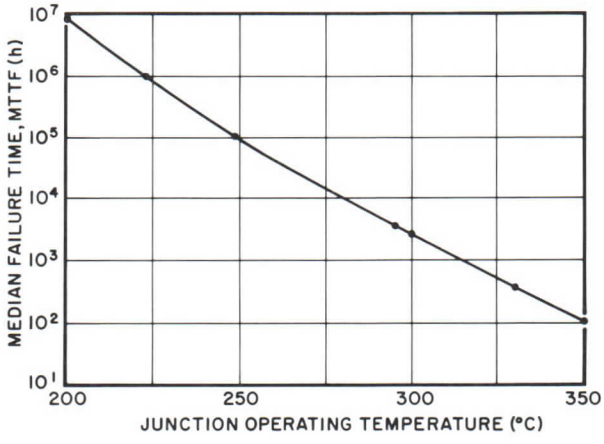

Figure 4 Median failure time variation with junction operating temperature for Varian GaAs IMPATT diodes.

A median lifetime of 10^5 hours is indicated for a junction temperature of 249°C and 10^7 hours at 198°C. Devices subjected to a d-c burn-in at 7-10 W input levels have accumulated 7,500 hours each without a single device-related failure.

ENVIRONMENTAL CAPABILITY

Varian GaAs IMPATT diodes are capable of meeting the following MIL-STD-750 Specification requirements under the test conditions noted.

Test	MIL-STD-750 Reference	Test Conditions
Steady State Operating Life	1026.1	1000 hours minimum operating time at reverse power, P_R to raise T_J to maximum rated value
High Temperature Life	1031.1	1000 hours minimum storage time at 125°C
Physical Dimensions	2066	Device profile at 20X
Solderability	2026	Sn 60, Pb 40, solder at 230°C
Temperature Cycling	1051.1 Cond. B	5 cycles from -55°C to +125°C, 0.5 hour at extremes, 5 minute transfer
Thermal Shock	1056.1	5 cycles from 0°C to +100°C, 3 second transfer
Moisture Resistance	1021.1	10 days, 90-98% RH, -10°C to +65°C, nonoperating
Shock	2016.1	5 blows each X_1, Y_1, Y_2, 1500 G, 0.5 ms pulse
Vibration Fatigue	2046	32 ± 8 hours each X, Y, Z, 96 hour total, 60 Hz, 20 G min.
Vibration Variable Frequency	2056	Four, 4-minute cycles each X, Y, Z, at 20 G min., 100 to 2000 Hz
Constant Acceleration	2006	1 minute each X_1, Y_1, Y_2, at 20,000 G
Terminal Strength	2036.1 Cond. E	Stud package — 2 pounds for 3 s, 120° apart
Salt Atmosphere	1041.1	35° fog for 24 hours

APPLICATION NOTES

High-efficiency GaAs IMPATT diodes achieve excellent reliability when properly designed and the correct operating conditions are applied. Varian GaAs IMPATT diodes use a grown-junction, Read-type structure which effectively eliminates the short term failure modes commonly observed on Schottky-barrier Read devices. High temperature, accelerated lifetest studies predict an MTTF of 10^7 hours at a junction temperature of 200°C. To realize this potentially long life, the following precautions should be taken when designing the circuit and operating the device.

JUNCTION TEMPERATURE

Accelerated lifetest studies show that device operating life varies inversely with the device operating temperature. It is important that the proper operating bias level is chosen correctly and that the heat sink heat-flow path is designed to minimize thermal resistance.

9250 GALLIUM ARSENIDE IMPATT DIODES

varian
solid state west division

TECHNICAL DATA

ULTRA LOW NOISE AND LOW NOISE MICROWAVE TRANSISTOR AMPLIFIERS FOR WIDEBAND SYSTEMS

0.5-4.0 GHz

DESCRIPTION

The Varian line of wideband transistor amplifiers covers the frequency range of 0.5 to 4.0 gigahertz. These amplifiers are intended primarily for use as preamplifiers in Wideband Electronic Warfare Systems requiring ultra-low or low noise figure and high power output for maximum sensitivity and dynamic range.

The all-discrete, microstripline, solid-state circuit design assures reliable performance and extremely long life when operated under the stringent environmental requirements of MIL-E-5400 and MIL-E-16400 specifications.

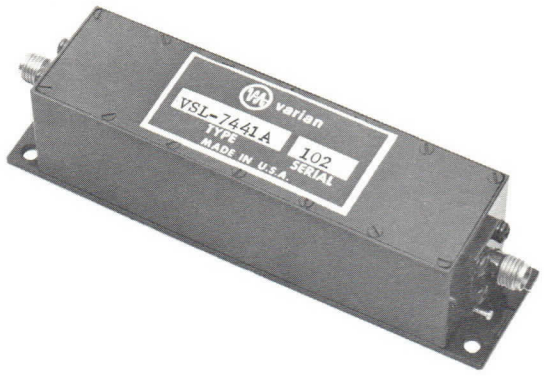

The table below lists many of the standard wideband units in this product line.

GENERAL CHARACTERISTICS[1,2,3,4,5]

Frequency Range (GHz)	Max. Noise Figure[6] (dB)	Min. Power Output at 1 dB Gain Comp. Point (+ dBm)	Typical Intercept Point for Intermod. Products (+ dBm)	Min. Small Signal Gain (dB)	Max. Gain Variation (± dB)	Max. Input and Output VSWR	Primary Input Requirements[7] (+Vdc)	Drawing Number	Model Number
0.5-1.0	2.5	10	23	40	1.0	2:1	15	1	VSP-7431K
0.5-1.0	2.5	10	23	25	1.0	2:1	15	1	VSP-7431A
0.5-1.0	2.5	10	23	25	1.0	2:1	103-127 Vac, 50-420 Hz	2	VSP-7431AP
0.5-1.0	3.0	10	23	40	1.5	2:1	15	1	VSP-7431H
0.5-1.0	3.0	10	23	40	1.5	2:1	103-127 Vac, 50-420 Hz	2	VSP-7431HP
0.5-1.0	3.5	10	23	25	1.0	2:1	15	1	VSP-7431B
0.5-1.0	4.5	10	23	25	1.5	2:1	15	1	VSP-7431C
1.0-2.0	3.5	10	22	40	1.0	2:1	15	1	VSL-7441K
1.0-2.0	3.5	10	22	25	1.0	2:1	15	1	VSL-7441A
1.0-2.0	3.5	10	22	25	1.0	2:1	103-127 Vac, 50-420 Hz	2	VSL-7441AP
1.0-2.0	4.0	10	22	25	1.0	2:1	15	1	VSL-7441P
1.0-2.0	4.0	10	22	40	1.5	2:1	15	1	VSL-7441H
1.0-2.0	4.0	10	22	40	1.5	2:1	103-127 Vac, 50-420 Hz	2	VSL-7441HP
1.0-2.0	4.5	10	22	25	1.0	2:1	15	1	VSL-7441B
1.0-2.0	6.0	7	19	25	1.5	2:1	15	1	VSL-7441C
1.0-2.6	5.5	10	21	25	1.0	2.5:1	15	1	VSL-7441L
2.0-4.0	4.5	10	21	25	1.0	2:1	15	1	VSS-7451 J
2.0-4.0	4.5	10	21	40	1.0	2:1	15	3	VSS-7451K
2.0-4.0	5.0	10	21	25	1.0	2:1	15	1	VSS-7451L
2.0-4.0	5.5	10	21	25	1.0	2:1	15	1	VSS-7451A
2.0-4.0	5.5	10	21	25	1.0	2:1	103-127 Vac, 50-420 Hz	2	VSS-7451AP
2.0-4.0	6.0	10	21	40	1.5	2:1	15	3	VSS-7451H
2.0-4.0	6.0	10	21	40	1.5	2:1	103-127 Vac, 50-420 Hz	4	VSS-7451HP
2.0-4.0	6.0	10	21	25	1.0	2:1	15	1	VSS-7451M
2.0-4.0	6.0	10	21	40	1.0	2:1	15	3	VSS-7451F
2.0-4.0	6.5	10	21	25	1.0	2:1	15	1	VSS-7451B
2.0-4.0	8.0	5	16	25	1.5	2:1	15	1	VSS-7451C

3162 3/74

Printed in U.S.A.

GENERAL CHARACTERISTICS [1,2,5]

PHYSICAL

Dimensions ..... See Outline Drawing
Weight, approximate
- Outline 1 ..... 3 oz
- Outline 2 ..... 11 oz
- Outline 3 ..... 6 oz
- Outline 4 ..... 19 oz

Connectors [8] ..... See Outline Drawings

ENVIRONMENTAL

Vibration, up to 500 Hz ..... 10 G
Shock, 11 ms ..... 15 G
Temperature ..... -54 to +85 °C
Altitude ..... 70,000 ft

NOTES:

1. Characteristics are based on performance tests. These values may change without notice as a result of additional data or product refinement. Consult the Varian Solid State West Division before using this information for final equipment design.
2. All performance characteristics can be modified to meet special customer requirements. In addition, units with higher or lower gain, and higher power output are available upon request.
3. As an option, amplifiers are available with integral limiters for protection against excessive rf input levels.
4. Automatic gain control, AGC, is available upon request.
5. These amplifiers are designed to meet the environmental requirements of MIL-E-5400 and MIL-E-16400. Special units to meet other environmental specification limits are also available.
6. Maximum noise figure at +25°C.
7. Units not indicating integral power supplies (no "P" suffix) can be supplied with power supplies if requested. In addition, versions operating from other line voltages can also be furnished upon request.
8. Units may be provided with Type N rf connectors upon request.

OUTLINE DRAWING

No. 1

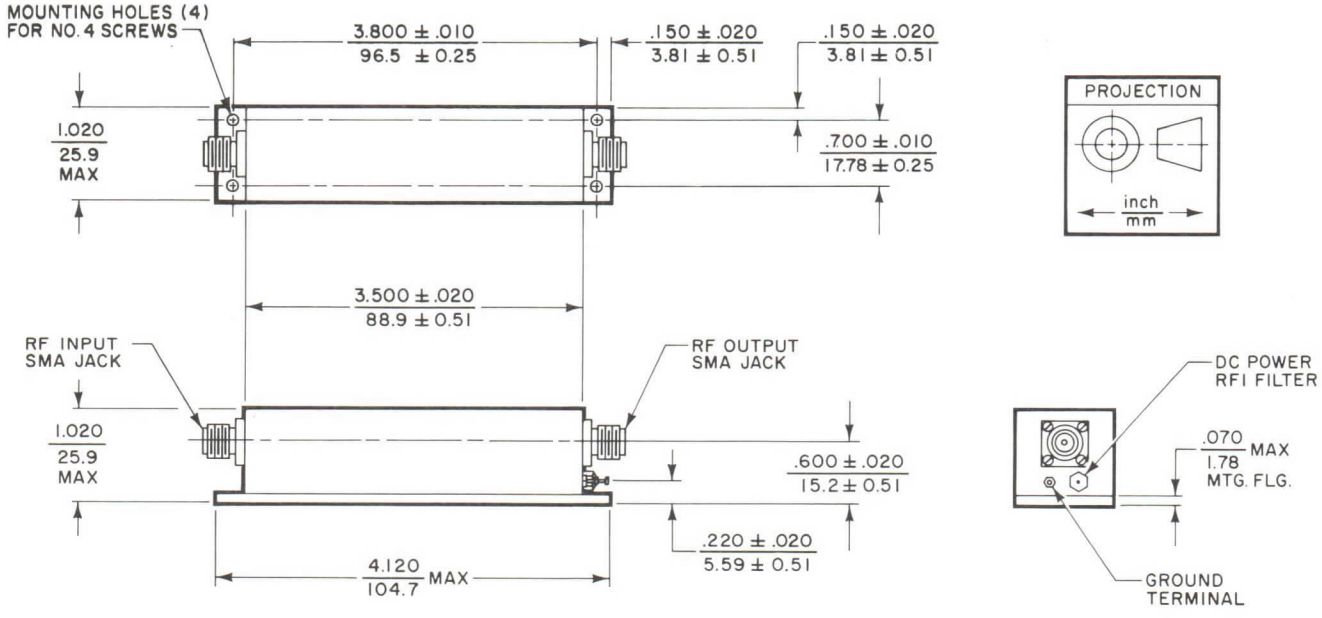

OUTLINE DRAWINGS

No. 2

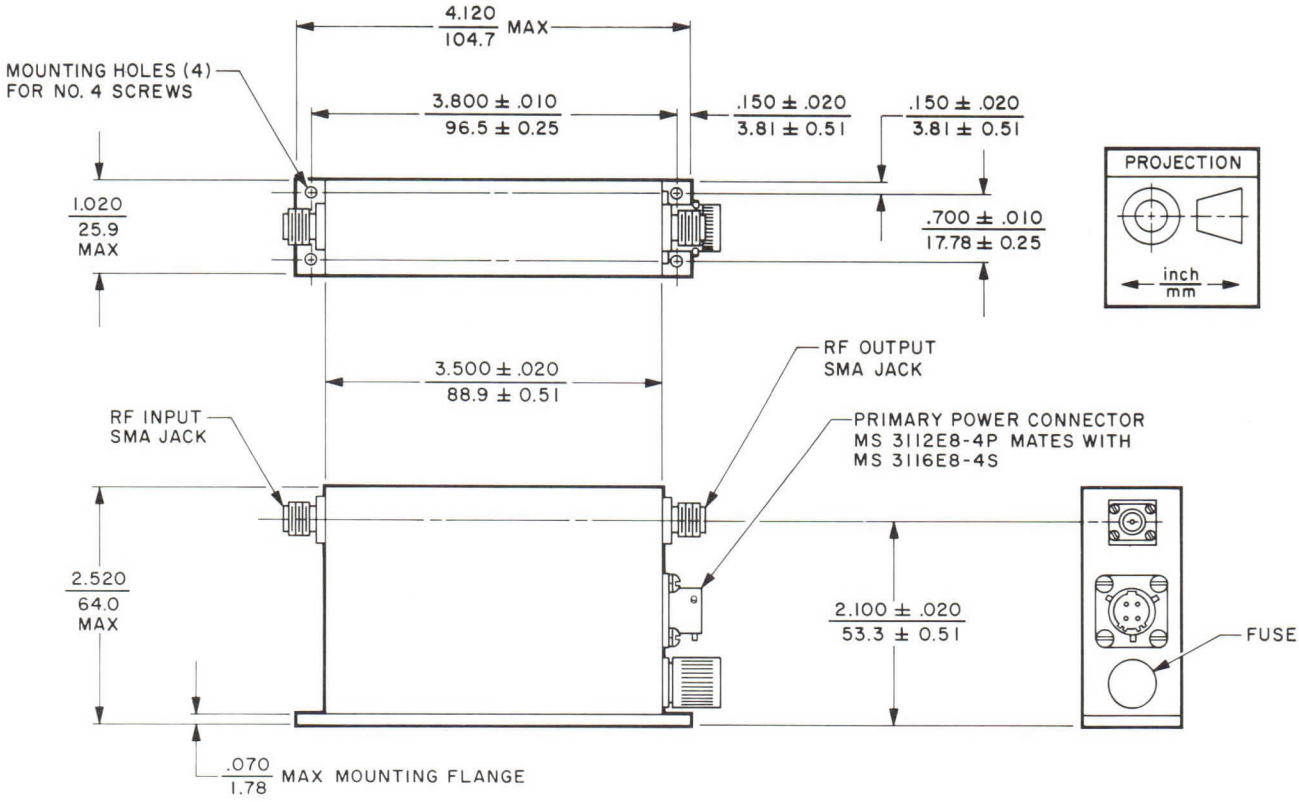

No. 3

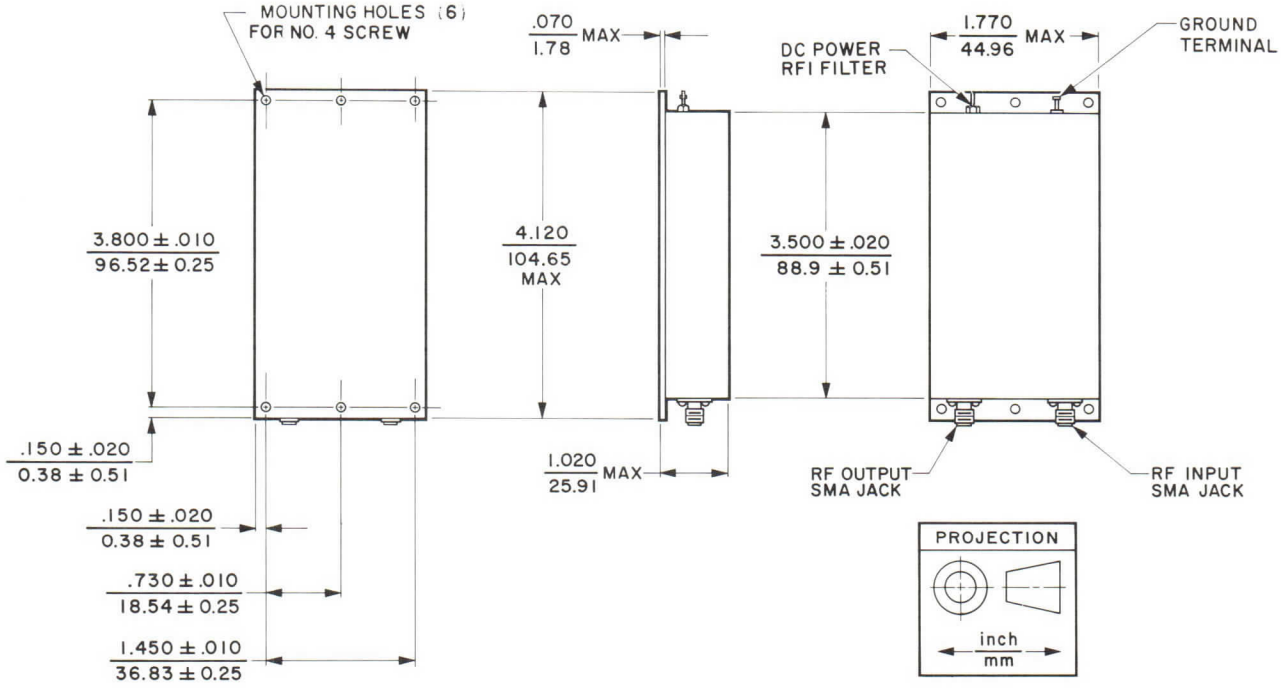

OUTLINE DRAWING

No. 4

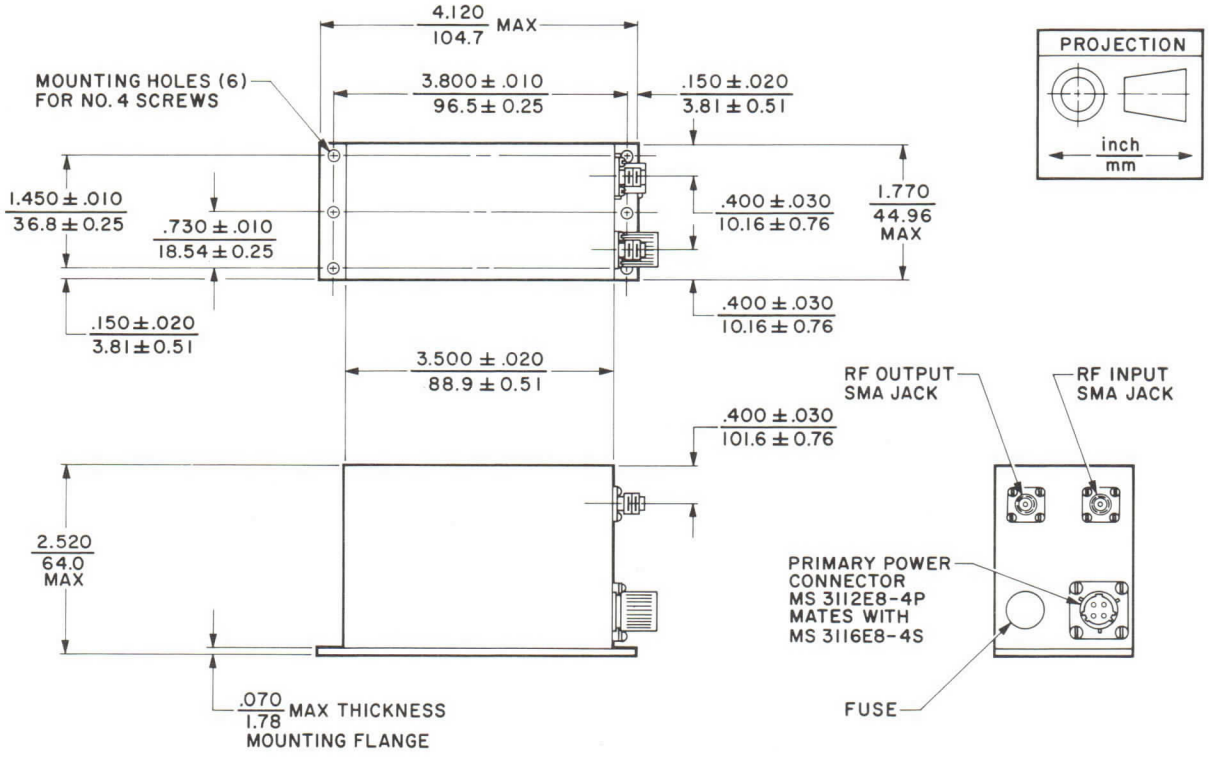

varian
solid state west division

TECHNICAL DATA

LOW NOISE, MEDIUM POWER, MICROWAVE TRANSISTOR AMPLIFIERS FOR RADAR, COMMUNICATIONS, AND WIDEBAND SYSTEMS
0.5-4.2 GHz

DESCRIPTION

The Varian line of low-noise, medium-power amplifiers covers the frequency range of 0.4 to 4.2 gigahertz. These amplifiers are ideal for use as drivers and transmitters in radar, communications, electronic warfare, and test equipment systems.

The all-discrete, microstripline, solid-state circuit design assures reliable performance and extremely long life when operated under the stringent environmental requirements of MIL-E-5400 and MIL-E-16400.

The table below lists many of the standard units in the medium-power product line.

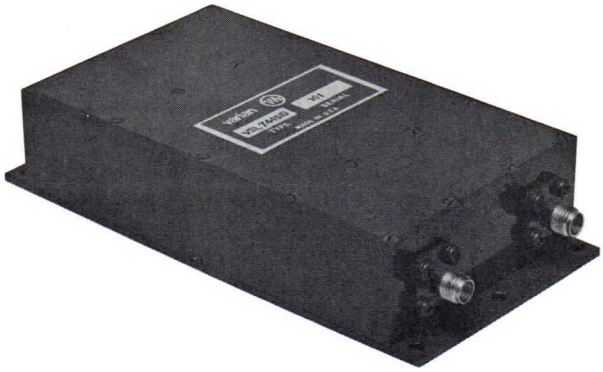

GENERAL CHARACTERISTICS[1,2,3,4,5]

Frequency Range (GHz)	Max. Noise Figure[6] (dB)	Min. Power Output at Saturation (+dBm)	Typical Intercept Point for Intermod. Products (+dBm)	Min. Small Signal Gain (dB)	Max. Gain Variation (±dB)	Max. Input and Output VSWR	Typical Current at +24 Vdc (mAdc)	Outline Drawing Number	Model Number[7]
0.5-1.0	8	30	35	35	1.0	2:1	500	1	VSP-7435B
0.5-1.0	8	33	38	35	1.0	2:1	800	2	VSP-7435C
0.96-1.215	8	30	35	35	0.5	2:1	500	1	VSL-7445F
0.96-1.215	8	33	38	35	0.5	2:1	800	2	VSL-7445G
1.0-2.0	8	23	28	35	1.5	2:1	200	1	VSL-7445L
1.0-2.0	10	30	35	35	1.5	2:1	550	2	VSL-7445M
1.0-2.6	10	23	28	30	2.0	2.5:1	250	1	VSL-7445R
1.2-1.4	10	30	35	35	0.5	2:1	500	1	VSL-7445H
1.2-1.4	10	33	38	35	0.5	2:1	800	2	VSL-7445J
1.7-2.3	10	30	35	35	1.0	2:1	850	1	VSS-7455B
2.0-4.0	8.5	20	25	35	2.0	2:1	200	2	VSS-7455H
2.7-3.1	8	29	34	35	1.0	2:1	500	2	VSS-7455E
2.8-3.6	8	25	30	36	1.0	2:1	550	2	VSS-7455F
3.1-3.5	8	26	31	36	1.0	2:1	550	2	VSS-7455G
3.7-4.2	10	22	27	35	0.5	2:1	250	2	VSG-7425B

PHYSICAL

Dimensions ..... See Outline Drawings
Weight, approximate
Outline 1 ..... 3 oz
Outline 2 ..... 6 oz
Connectors[8] ..... See Outline Drawings

ENVIRONMENTAL

Vibration, up to 500 Hz ..... 10 G
Shock, 11 ms ..... 15 G
Temperature ..... -54 to +85 °C
Altitude ..... 70,000 ft

3305 10/74 Supersedes 3165

Printed in U.S.A.

MEDIUM POWER TRANSISTOR AMPLIFIERS

NOTES:

1. Characteristics are based on performance tests. These values may change without notice as a result of additional data or product refinement. Consult the Varian Solid State West Division before using this information for final equipment design.
2. All performance characteristics can be modified to meet special customer requirements. In addition, units with higher or lower gain, and higher power output are available upon request.
3. As an option, amplifiers are available with integral limiters for protection against excessive rf input levels.
4. Automatic gain control, AGC, is available upon request.
5. These amplifiers are designed to meet the environmental requirements of MIL-E-5400 and MIL-E-16400. Special units to meet other environmental specification limits are also available.
6. Maximum noise figure at +25°C.
7. Units not indicating integral power supplies (no "P" suffix) can be supplied with power supplies if requested. In addition, versions operating from other line voltages can also be furnished upon request.
8. Units may be provided with Type N rf connectors upon request.

OUTLINE DRAWINGS

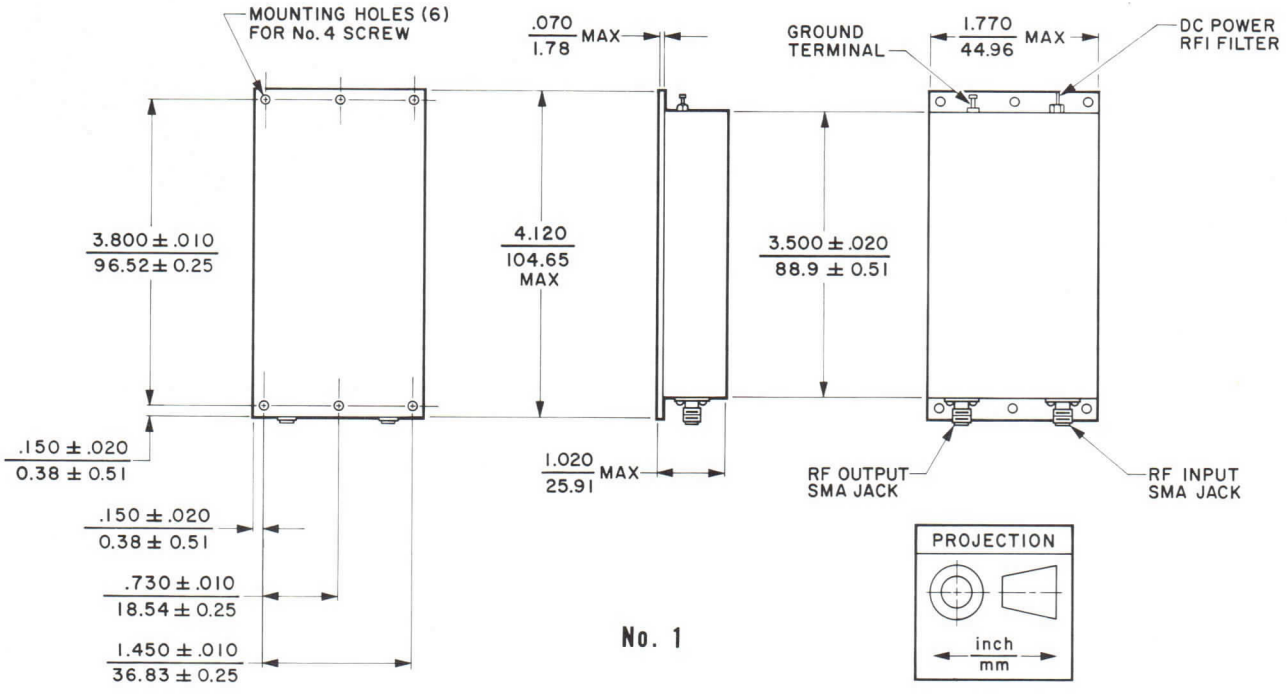

No. 1

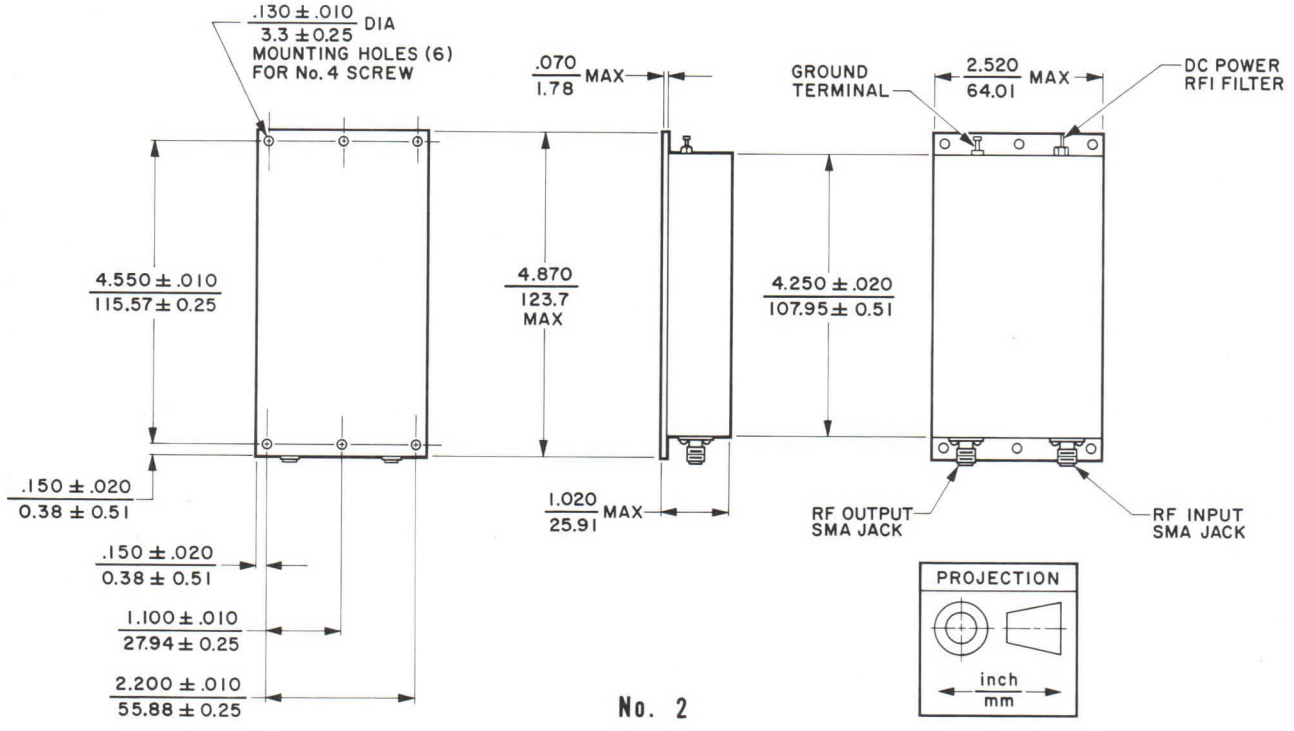

No. 2

SOLID STATE SOURCES AND MULTIPLIERS

varian
solid state west division

TECHNICAL DATA

VARACTOR TUNED GUNN EFFECT MICROWAVE OSCILLATORS

DESCRIPTION

Varian varactor-tuned, Gunn-effect oscillators are solid-state microwave sources for a wide variety of applications from 4 to 40 gigahertz. Narrow electronic tuning range models are offered for use in receiver-local-oscillator and transmitter-exciter applications requiring optimum frequency stability, such as AFC and phase-lock-loop circuits. Wide electronic tuning range versions provide the wide tuning ranges and rapid tuning capability needed in electronic warfare systems, including active jammers, high-speed-tuning surveillance receivers, frequency-agile radars, and associated test equipment. In addition to the performance characteristics listed herein, other combinations of output power, mechanical and electronic tuning, and power and frequency temperature coefficients can be furnished to meet special customer requirements. Some versions provide full waveguide electronic tuning, very short (frequency) settling times, and excellent post-tuning drift characteristics in a very rugged, compact package containing both the oscillator and an integral isolator.

APPLICATION NOTES

Varactor-tuned, Gunn-effect oscillators are inherently capable of being tuned at very high rates. However, tuning speed or "slew rate" is a function of both the driving-circuit impedance and the input capacitance of the tuning port. The input capacitance of the varactor tuning port on Varian oscillators varies from 30 to 300 picofarads, depending on the design.

Most varactor-tuned oscillators display a tuning nonlinearity proportional to the C-V characteristics of the varactor diode. When better linearity is required, a linearizing circuit may be added to the oscillator. The degree of linearity achieved varies with the complexity of the linearizing circuit. Linearity of ±1% of the electronic tuning bandwidth is readily obtainable. A typical tuning curve for an X-band oscillator is shown below.

CHARACTERISTIC CURVES[1]

Typical performance values

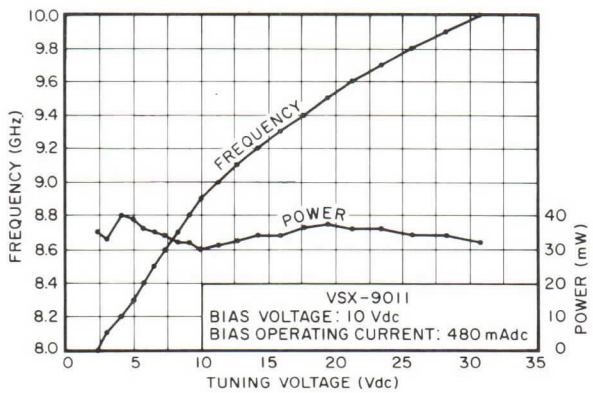

OUTLINE DRAWINGS

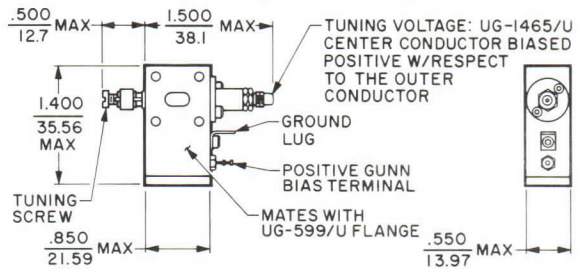

No. 1

inch
mm

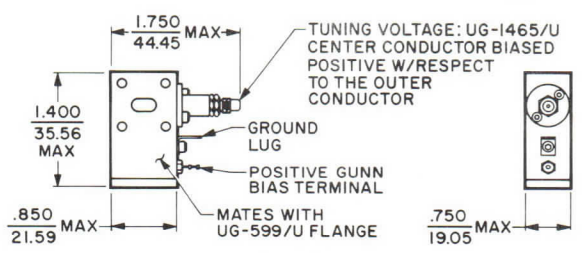

No. 2

(Continued on back page)

3212 7/74

Printed in U.S.A.

NARROW ELECTRONIC TUNING RANGE OSCILLATORS[1]

Frequency Coverage[2] (GHz)	Output Power[2] (mW)	Tuning Range[2] Mechanical (MHz)	Tuning Range[2] Electronic (MHz)	Maximum Gunn Bias Voltage (V)	Maximum Gunn Bias Current Operating (mA)	Maximum Gunn Bias Current Threshold (mA)
4.0 - 8.0	10	± 250	+ 20	18	500	700
4.0 - 8.0	50	± 100	+ 20	18	600	800
4.0 - 8.0	100	± 100	+ 20	18	800	1000
4.0 - 8.0	100	± 100	+ 50	18	800	1000
8.0 - 12.4	10	± 200	+ 30	12	500	700
8.0 - 12.4	25	± 200	+ 60	12	500	700
8.0 - 12.4	50	± 250	+ 30	12	800	1000
8.0 - 12.4	50	± 500	+ 100	12	800	1000
8.0 - 12.4	50	± 200	+ 200	12	800	1000
8.0 - 12.4	100	± 250	+ 30	12	1200	1400
8.0 - 12.4	200	± 250	+ 30	12	1400	1600
12.4 - 18.0	25	± 200	+ 30	10	500	700
12.4 - 18.0	50	± 200	+ 30	10	700	900
18.0 - 26.5	25	± 200	+ 30	8	600	800
18.0 - 26.5	25	± 500	+ 100	8	800	1000
26.5 - 40.0	25	± 200	+ 60	7	600	800
26.5 - 40.0	75	0	+ 200	7	1000	1200
26.5 - 40.0	100	0	+ 150	7	1200	1500

WIDE ELECTRONIC TUNING RANGE OSCILLATORS[1]

Frequency Coverage[2] (GHz)	Output Power[2] (mW)	Tuning Range[2] Mechanical (MHz)	Tuning Range[2] Electronic (MHz)	Maximum Gunn Bias Voltage (V)	Maximum Gunn Bias Current Operating (mA)	Maximum Gunn Bias Current Threshold (mA)
4.0 - 8.0	10	0	500	- 20	500	700
4.0 - 8.0	10	0	1000	- 20	500	700
4.0 - 8.0	25	0	500	- 20	700	900
4.0 - 8.0	25	0	1000	- 20	700	900
4.0 - 8.0	50	0	500	- 20	800	1000
4.0 - 8.0	50	0	1000	- 20	800	1000
5.0 - 8.0	10	0	1500	- 20	500	700
5.0 - 8.0	10	0	2000	- 20	500	700
5.0 - 8.0	25	0	1500	- 20	700	900
5.0 - 8.0	25	0	2000	- 20	700	900
8.0 - 12.4	10	0	+ 500	- 15	500	700
8.0 - 12.4	10	0	+ 1000	- 15	500	700
8.0 - 12.4	10	0	+ 2000	- 15	500	700
8.0 - 12.4	10	0	+ 3000	- 15	700	900
8.0 - 12.4	25	0	+ 1000	- 15	700	900
8.0 - 12.4	25	0	2000	- 15	700	900
8.0 - 12.4	25	0	3000	- 15	800	1000
8.0 - 12.4	50	0	500	- 15	800	1000
8.0 - 12.4	50	0	1000	- 15	800	1000
8.0 - 12.4	100	0	500	- 15	900	1200
8.0 - 12.4	100	0	1000	- 15	900	1200
12.4 - 18.0	10	0	1000	- 10	500	700
12.4 - 18.0	10	0	2000	- 10	500	700
12.4 - 18.0	10	0	3000	- 10	700	900
12.4 - 18.0	25	0	2000	- 10	700	900
12.4 - 18.0	25	0	3000	- 10	800	1000
12.4 - 18.0	50	0	1000	- 10	800	1000
12.4 - 18.0	100	0	500	- 10	900	1200
12.4 - 18.0	100	0	1000	- 10	900	1200
18.0 - 26.5	25	0	1000	8	800	1000
18.0 - 26.5	100	± 250	500	8	1000	1200
26.0 - 40.0	50	0	1000	7	1000	1200
26.5 - 40.0	100	0	1000	7	1500	2000

Pulling at 1.2:1 VSWR (MHz)	Pushing[3] (MHz/V)	Varactor Voltage Tuning Range[4] (V)	Typical FM Noise[5] (Hz rms)	Maximum Frequency Temperature Coefficient (MHz/°C)	Outline Drawing Number	Type Number[6,7]
4	5	0 - 40	20	± 0.2	3	VSC-9019S2
5	5	0 - 40	20	± 0.2	3	VSC-9019S3
6	8	0 - 40	20	± 0.2	3	VSC-9019S4
30	30	0 - 40	100	± 0.5	3	VSC-9019S1
6	10	0 - 40	20	± 0.4	6	VSX-9011S8
7	10	0 - 40	20	± 0.4	6	VSX-9011S1
25	10	0 - 40	50	± 0.4	6	VSX-9011T1
40	50	0 - 40	150	± 1.0	6	VSX-9011S6
40	50	0 - 40	100	± 1.0	6	VSX-9011S3
25	10	0 - 40	50	± 0.4	6	VSX-9011T2
25	15	0 - 40	50	± 0.4	6	VSX-9011T3
10	15	0 - 40	20	± 0.6	8	VSU-9012S1
12	15	0 - 40	20	± 0.6	8	VSU-9012S2
100	---	0 - 40	250	± 2.5	4	VSK-9014S1
100	80	0 - 40	250	± 2.5	4	VSK-9014S2
100	150	0 - 40	300	± 3.0	1	VSA-9015S1
140	150	0 - 40	300	± 3.0	2	VSA-9015S3
140	150	0 - 40	300	± 3.0	2	VSA-9015S4

Pulling at 1.5:1 VSWR (MHz)	Pushing[3] (MHz/V)	Varactor Voltage Tuning Range[4] (V)	Slope Ratio	Typical FM Noise[5] (Hz rms)	Maximum Frequency Temperature Coefficient (MHz/°C)	Outline Drawing Number	Type Number[6,7,8]
6	50	0 - 40	---	200	± 2.0	9	VSC-9019T1†
8	50	0 - 45	3:1	200	± 2.0	9	VSC-9019T2†
10	50	0 - 40	---	200	± 2.0	9	VSC-9019T3†
15	75	0 - 45	3:1	200	± 2.0	9	VSC-9019T4†
15	75	0 - 40	---	200	± 3.0	9	VSC-9019T5†
20	75	0 - 45	3:1	200	± 3.0	9	VSC-9019T6†
10	75	0 - 45	4:1	200	± 3.0	9	VSC-9019T7†
15	75	0 - 45	5:1	200	± 3.0	9	VSC-9019T8†
20	75	0 - 45	4:1	200	± 3.0	9	VSC-9019T9†
20	100	0 - 45	5:1	300	± 3.0	9	VSC-9019T10†
6	50	0 - 40	---	200	± 2.0	7	VSX-9011T4†
8	50	0 - 45	3:1	200	± 2.0	7	VSX-9011T6†
10	75	0 - 45	5:1	200	± 3.0	7	VSX-9011S4†
15	75	0 - 45	7:1	300	± 3.0	7	VSX-9011X2†
10	50	0 - 45	3:1	200	± 2.0	7	VSX-9011S2†
15	75	0 - 45	5:1	200	± 3.0	7	VSX-9011X1†
20	100	0 - 45	7:1	300	± 3.0	7	VSX-9011X3†
10	75	0 - 40	---	200	± 2.0	7	VSX-9011T5†
15	75	0 - 45	3:1	200	± 3.0	7	VSX-9011T7†
15	100	0 - 40	---	200	± 2.0	7	VSX-9011S7†
20	100	0 - 45	3:1	200	± 4.0	7	VSX-9011T8†
15	100	0 - 45	3:1	200	± 2.0	7	VSU-9012T1†
15	125	0 - 45	5:1	300	± 3.0	7	VSU-9012S4†
20	150	0 - 45	10:1	500	± 3.0	7	VSU-9012X2†
15	150	0 - 45	5:1	300	± 3.0	7	VSU-9012X1†
20	175	0 - 45	10:1	700	± 4.0	7	VSU-9012X3†
20	150	0 - 45	3:1	200	± 2.0	7	VSU-9012S3†
20	150	0 - 40	---	200	± 1.5	7	VSU-9012S5†
25	175	0 - 45	3:1	300	± 2.0	7	VSU-9012T2†
100*	150	0 - 40	---	250	± 3.0	5	VSK-9014S3
100*	---	0 - 40	---	250	± 3.0	4	VSK-9014S5
140*	150	0 - 40	---	300	± 3.0	2	VSA-9015S2
140*	150	0 - 40	---	300	± 3.0	2	VSA-9015S5

* At 1.2:1 VSWR

† These types contain an integral isolator

VARACTOR TUNED GUNN EFFECT MICROWAVE OSCILLATORS

OUTLINE DRAWINGS

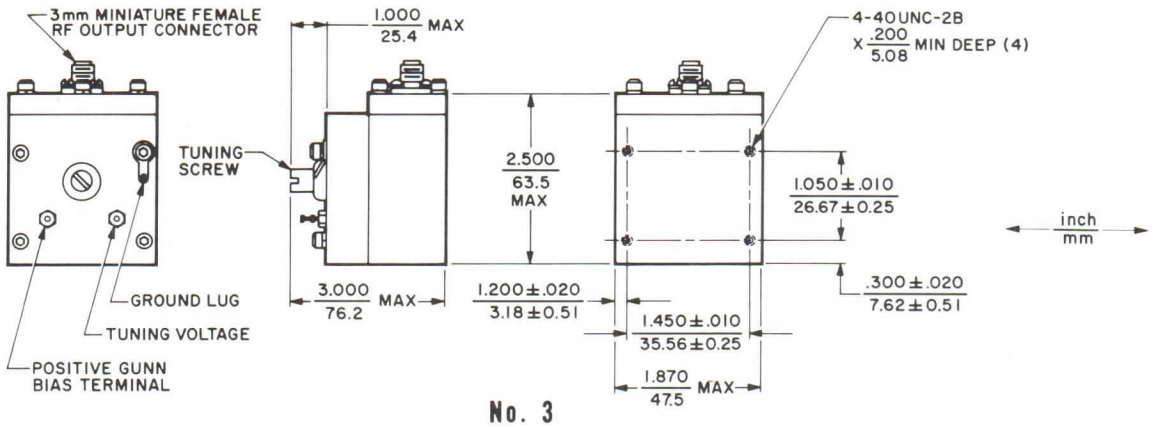

No. 3

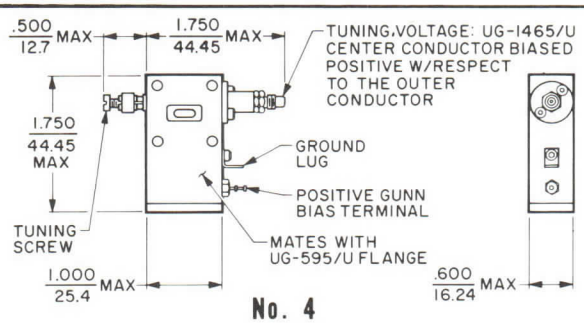

No. 4

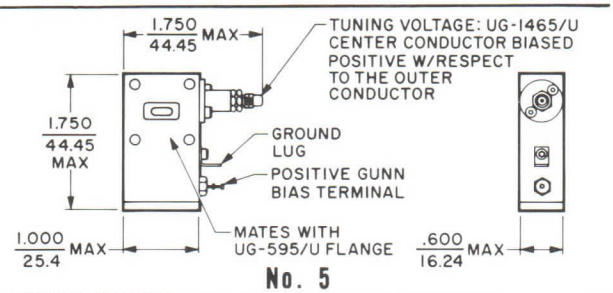

No. 5

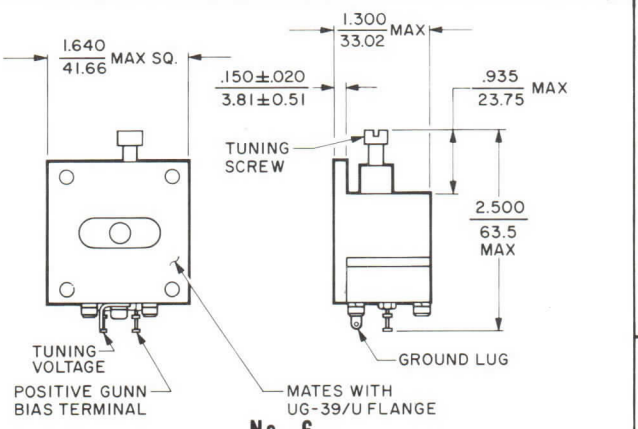

No. 6

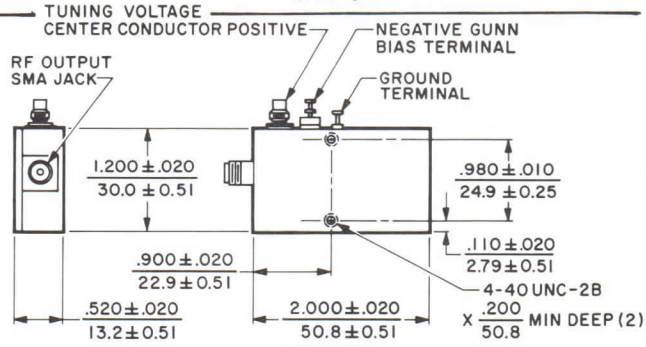

No. 7

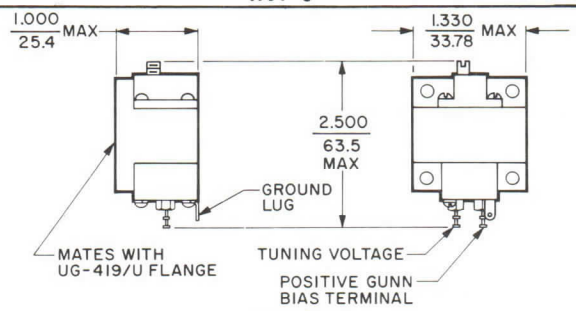

No. 8

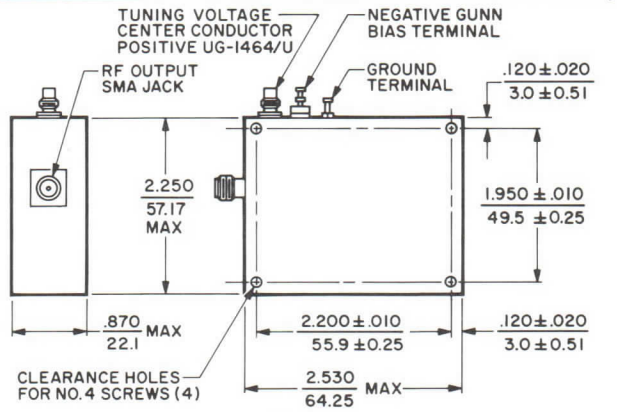

No. 9

NOTES:

1. Characteristics and performance values are based on performance tests. These figures may change without notice as a result of additional data or product refinement. Consult the Varian Solid State West Division before using this information for equipment design.
2. When ordering, specify the exact center frequency, tuning, and output power desired. Each oscillator is factory adjusted to provide optimum performance at only one combination of these parameters. The value of center frequency plus tuning range cannot exceed the upper limit of frequency coverage.
3. Measured from the operating bias voltage to 1 volt below the operating bias voltage.
4. Models having ranges other than those listed can be furnished on request.
5. Measured in 1-kHz bandwidth 10 kHz from the carrier.
6. Heat-sink temperature range is 0-50°C. Versions operating over wider ranges are available on request.
7. The suffixes "S1", "S2", "S3", etc. denote models for operation at different power levels within various segments of the total frequency coverage of the series. When an order is received, the alpha-numeric suffix will be replaced by a two-letter suffix defining the exact center frequency and power level specified.
8. Wideband varactor-tuned oscillators can be supplied with waveguide outputs upon request.

varian
solid state west division

TECHNICAL DATA

VSX-9001
Series

SOLID STATE OSCILLATORS

8.0-12.4 GHz

DESCRIPTION

VSX-9001 Gunn-effect oscillators are used primarily as pump sources for parametric amplifiers. They are also suitable for a wide variety of general-purpose applications. Models in the series deliver CW output power ranging from 5 to 250 milliwatts. Each oscillator, however, is factory adjusted to operate at only one selected combination of frequency and output power. Standard models are tunable ±100 megahertz from any specified frequency between 8.0 to 12.4 gigahertz. Upon request, special versions can be furnished either fixed tuned or with a tunability of ± 350 megahertz or more. Careful design and selection of materials provide outstanding frequency and power stability. Cooling is achieved by attaching the oscillator to a heat sink to keep the oscillator temperature at 50°C or less.

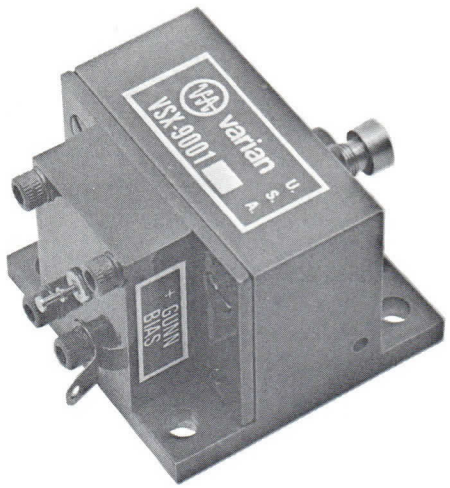

GENERAL CHARACTERISTICS[1]

RF PERFORMANCE

Output Power[2] (mW)	Maximum Bias Current (Adc)	Maximum Threshold Current (Adc)	Maximum Pushing Factor[3] (MHz/V)	Maximum Pulling Factor 1.2:1 VSWR (MHz)	Typical FM Noise[4] (Hz rms)	Maximum Freq/Temp Coefficient (kHz/°C)	Type Number[5]
5	0.5	0.75	10	5	5	400	VSX-9001S1
10	0.5	0.75	10	5	5	400	VSX-9001S2
25	0.5	0.75	10	5	5	400	VSX-9001S3
50	0.5	0.75	10	5	5	400	VSX-9001S4
75	0.6	0.80	15	10	10	400	VSX-9001S5
100	0.6	0.80	15	10	10	400	VSX-9001S6
150	0.8	1.00	15	15	20	400	VSX-9001S7
200	1.0	1.30	15	15	20	400	VSX-9001S8
250	1.0	1.30	15	15	20	400	VSX-9001S9

3012 8/73

Printed in U.S.A.

GENERAL CHARACTERISTICS (con't.)

ELECTRICAL

Frequency Range[2]	8.0-12.4 GHz
Tuning Range, min[6]	± 100 MHz
Bias Voltage	
Typical	10 Vdc
Maximum	12 Vdc
Power/Temperature Coefficient, max	0.04 dB/°C
Power Supply Regulation, max	0.01 %
Load VSWR, max	1.2:1

PHYSICAL

Dimensions	See Outline Drawing
Weight, approx	4 oz
Mounting Position	Any
Cooling	Conduction
Heat Sink Temperature Range[6]	0 to 50 °C
Connections	See Outline Drawing

CHARACTERISTIC CURVE

Typical relative values

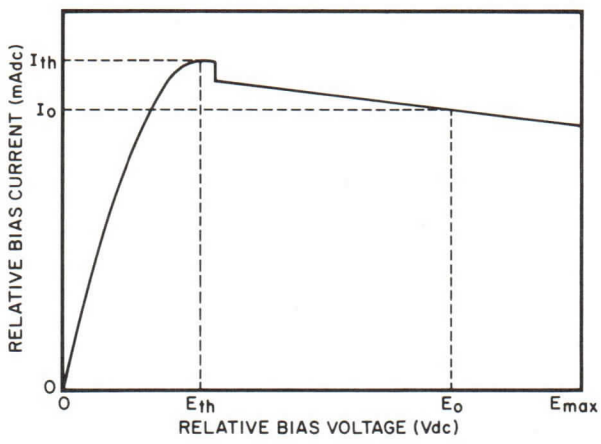

NOTES:

1. Characteristics and performance values are based on performance tests. These figures may change without notice as a result of additional data or product refinement. Consult the Varian Solid State West Division before using this information for equipment design.
2. When ordering, specify the exact center frequency and output power desired. Each oscillator is factory adjusted to provide optimum performance at only one combination of these parameters. In addition, specify whether the unit is to be fixed tuned or tunable; if tunable, indicate the tuning range desired.
3. Measured from the operating bias voltage to 1 volt below the operating bias voltage.
4. Measured in 1-kHz bandwidth 10 kHz from the carrier.
5. The suffixes "S1", "S2", "S3", etc. denote models for operating at different power levels within various segments of the total frequency coverage of the series. When an order is received, the alpha-numeric suffix will be replaced by a two-letter suffix defining the exact center frequency and power level specified.
6. Models having other ranges can be furnished on request.

OUTLINE DRAWING

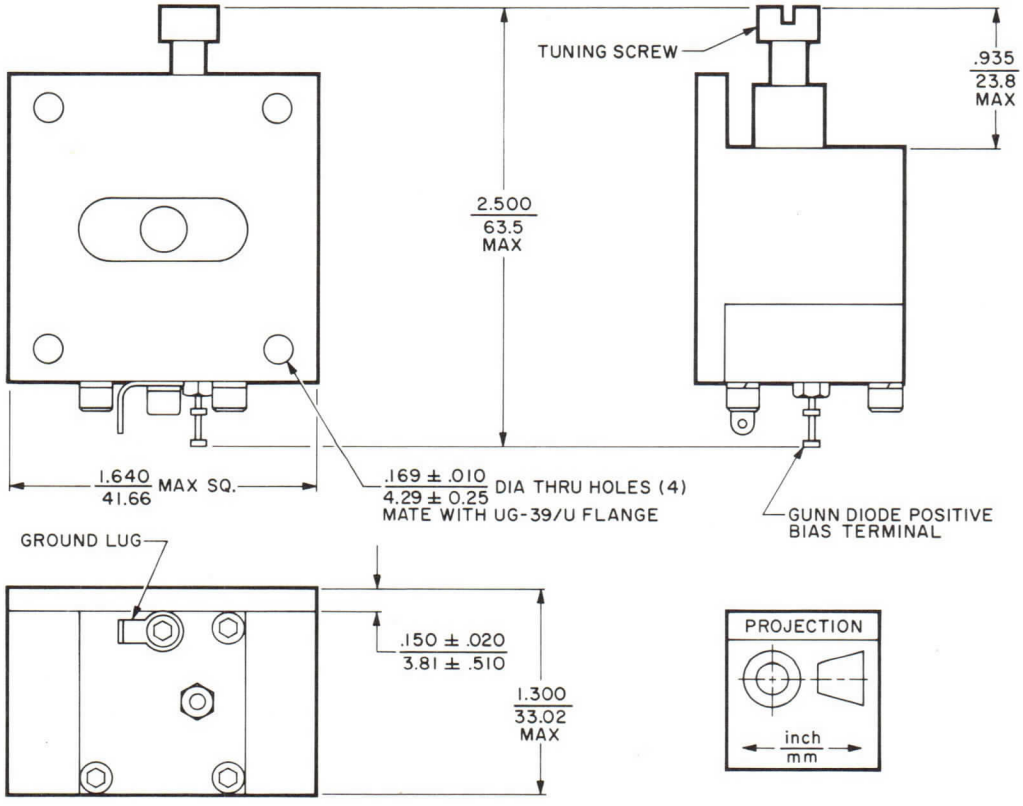

varian
solid state west division

TECHNICAL DATA

VSU-9002
Series

SOLID STATE OSCILLATORS

12.4-18.0 GHz

DESCRIPTION

VSU-9002 Gunn-effect oscillators are used primarily as pump sources for parametric amplifiers. They are also suitable for a wide variety of general-purpose applications. Models in the series deliver CW output power ranging from 5 to 250 milliwatts. Each oscillator, however, is factory adjusted to operate at only one selected combination of frequency and output power. Standard models are tunable ±100 megahertz from any specified frequency between 12.4 to 18.0 gigahertz. Upon request, special versions can be furnished either fixed tuned or with a tunability of ± 350 megahertz or more. Careful design and selection of materials provide outstanding frequency and power stability. Cooling is achieved by attaching the oscillator to a heat sink which maintains the oscillator temperature at 50°C or less.

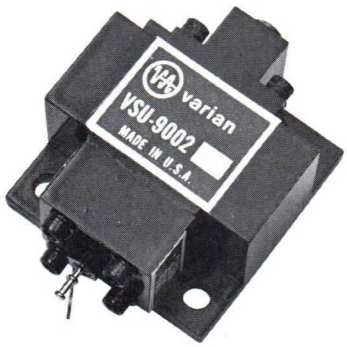

GENERAL CHARACTERISTICS[1]

RF PERFORMANCE

Output Power[2] (mW)	Maximum Bias Current (Adc)	Maximum Threshold Current (Adc)	Maximum Pushing Factor[3] (MHz/V)	Maximum Pulling Factor 1.2:1 VSWR (MHz)	Typical FM Noise[4] (Hz rms)	Maximum Freq/Temp Coefficient[5] (kHz/°C)	Type Number[6]
5	0.5	0.75	15	5	10	500	VSU-9002S1
10	0.5	0.75	15	5	10	500	VSU-9002S2
25	0.5	0.75	15	10	10	500	VSU-9002S3
50	0.5	0.75	15	10	10	500	VSU-9002S4
75	0.6	0.90	20	15	20	500	VSU-9002S5
100	0.6	0.90	20	15	20	600	VSU-9002S6
150	0.8	1.20	20	20	20	600	VSU-9002S7
200	1.0	1.50	20	20	30	750	VSU-9002S8
250	1.0	1.50	20	20	30	750	VSU-9002S9

3013 11/73

Printed in U.S.A.

GENERAL CHARACTERISTICS (con't.)

ELECTRICAL

Frequency Range	12.4-18.0 GHz
Tuning Range, min[7]	± 100 MHz
Bias Voltage	
Typical	8 Vdc
Maximum	10 Vdc
Power/Temperature Coefficient, max[5]	± 0.04 dB/°C
Power Supply Regulation, max	0.01 %
Load VSWR, max	1.2:1

PHYSICAL

Dimensions	See Outline Drawing
Weight, approx	4 oz
Mounting Position	Any
Cooling	Conduction
Heat Sink Temperature Range[7]	0 to 50 °C
Connections	See Outline Drawing

CHARACTERISTIC CURVE

Typical relative values

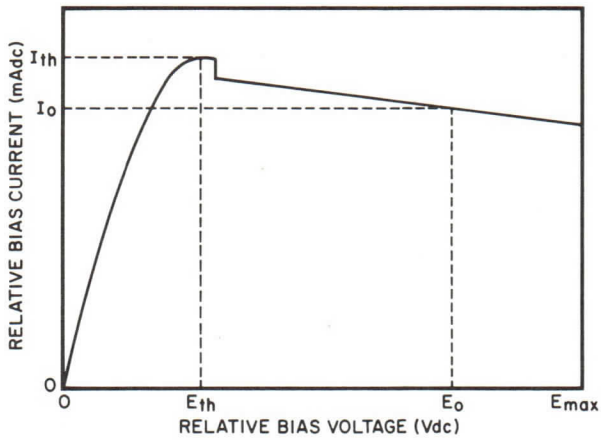

NOTES:

1. Characteristics and performance values are based on performance tests. These figures may change without notice as a result of additional data or product refinement. Consult the Varian Solid State West Division before using this information for equipment design.
2. When ordering, specify the exact center frequency and output power desired. Each oscillator is factory adjusted to provide optimum performance at only one combination of these parameters. In addition, specify whether the unit is to be fixed tuned or tunable; if tunable, indicate the tuning range desired.
3. Measured from the operating bias voltage to 1 volt below the operating bias voltage.
4. Measured in a 1-kHz bandwidth 10 kHz from the carrier.
5. Versions exhibiting smaller frequency/temperature and power/temperature coefficients can be supplied on request.
6. The suffixes, "S1", "T3", etc., denote models for operation at different power levels within various segments of the total frequency coverage of the series.
7. Models having other ranges can be furnished on request.

OUTLINE DRAWING

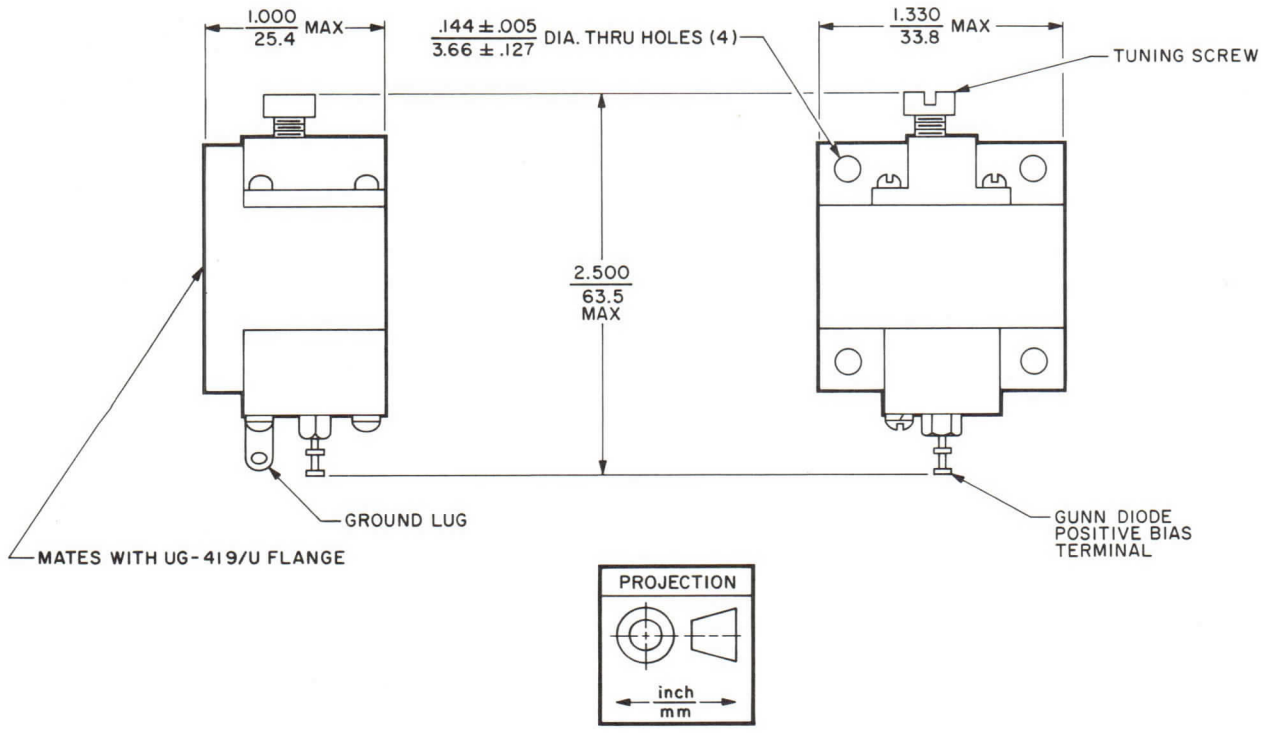

varian
solid state west division

TECHNICAL DATA

VSK-9004
Series

SOLID STATE OSCILLATORS

18.0-26.5 GHz

DESCRIPTION

VSK-9004 Gunn-effect oscillators are used primarily as pump sources for parametric amplifiers. They are also suitable for a wide variety of general-purpose applications. Models in the series deliver CW output power ranging from 5 to 250 milliwatts. Each oscillator, however, is factory adjusted to operate at only one selected combination of frequency and output power. Standard models are tunable ± 100 megahertz from any specified frequency between 18.0 and 26.5 gigahertz. Upon request, special versions can be furnished either fixed tuned or with a tunability of ± 350 megahertz or more. Careful design and selection of materials provide outstanding frequency and power stability.

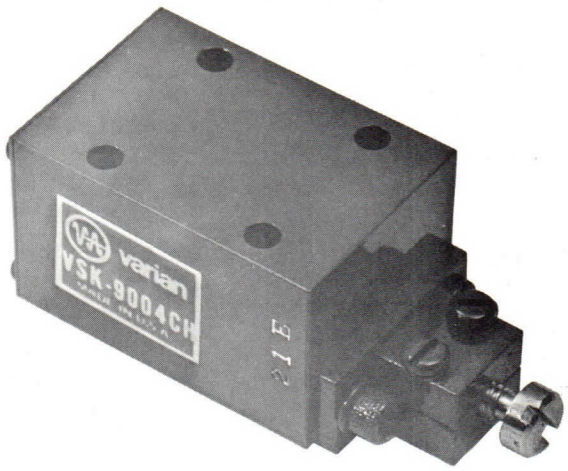

Cooling is achieved by attaching the oscillator to a heat sink which maintains the oscillator temperature at 50°C or less.

GENERAL CHARACTERISTICS[1]

RF PERFORMANCE

Frequency Range[2] (GHz)	Output Power[2] (mW)	Maximum Bias Current (Adc)	Maximum Threshold Current (Adc)	Maximum Pushing Factor[3] (MHz/V)	Maximum Pulling Factor 1.2:1 VSWR (MHz)	Typical FM Noise[4] (Hz rms)	Maximum Freq/Temp Coefficient (MHz/°C)	Type Number[5]
18.0-22.0	5	0.5	0.75	20	10	20	0.8	VSK-9004S1
18.0-22.0	10	0.5	0.75	20	10	20	0.8	VSK-9004S2
18.0-22.0	25	0.5	0.75	20	10	20	0.8	VSK-9004S3
18.0-22.0	50	0.6	0.80	20	20	30	0.8	VSK-9004S4
18.0-22.0	75	0.6	0.80	20	20	30	0.8	VSK-9004S5
18.0-22.0	100	1.0	1.20	20	40	30	0.8	VSK-9004S6
18.0-22.0	150	1.3	1.50	20	50	50	1.0	VSK-9004S7
18.0-22.0	200	1.3	1.50	20	50	50	1.0	VSK-9004S8
18.0-22.0	250	1.3	1.50	20	50	50	1.0	VSK-9004S9
22.0-26.5	5	0.5	0.75	20	10	20	0.8	VSK-9004T1
22.0-26.5	10	0.5	0.75	20	10	20	0.8	VSK-9004T2
22.0-26.5	25	0.5	0.75	20	10	20	0.8	VSK-9004T3
22.0-26.5	50	0.6	0.80	20	20	30	0.8	VSK-9004T4
22.0-26.5	75	0.6	0.80	20	20	30	0.8	VSK-9004T5
22.0-26.5	100	1.0	1.20	20	40	30	0.8	VSK-9004T6
22.0-26.5	150	1.3	1.50	20	50	50	1.0	VSK-9004T7
22.0-26.5	200	1.3	1.50	20	50	50	1.0	VSK-9004T8
22.0-26.5	250	1.3	1.50	20	50	50	1.0	VSK-9004T9

3014 6/73

Printed in U.S.A.

GENERAL CHARACTERISTICS[1] (con't.)

ELECTRICAL

Frequency Coverage	18.0-26.5 GHz
Tuning Range, min[6]	± 100 MHz
Bias Voltage	
Typical	7 Vdc
Maximum	8 Vdc
Power/Temperature Coefficient, max	± 0.04 dB/°C
Power Supply Regulation, max	0.01 %
Load VSWR, max	1.2:1

PHYSICAL

Dimensions	See Outline Drawing
Weight	4 oz
Mounting Position	Any
Cooling	Conduction
Heat Sink Temperature Range[6]	0 to 50 °C
Connections	See Outline Drawing

CHARACTERISTIC CURVE

Typical relative values

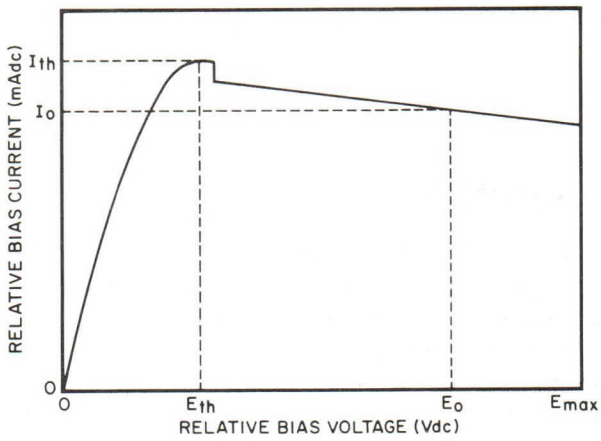

NOTES:

1. Characteristics and performance values are based on performance tests. These figures may change without notice as a result of additional data or product refinement. Consult the Varian Solid State West Division before using this information for equipment design.
2. When ordering, specify the exact center frequency and output power desired. Each oscillator is factory adjusted to provide optimum performance at only one combination of these parameters. In addition, specify whether the unit is to be fixed tuned or tunable; if tunable, indicate the tuning range desired.
3. Measured from the operating bias voltage to 1 volt below the operating bias voltage.
4. Measured in a 1-kHz bandwidth 10 kHz from the carrier.
5. The suffixes, "S1", "T3", etc., denote models for operation at different power levels within various segments of the total frequency coverage of the series. When an order is received the alpha-numeric suffix will be replaced by a two-letter suffix defining the exact center frequency and power level specified.
6. Models having other ranges can be furnished on request.

OUTLINE DRAWING

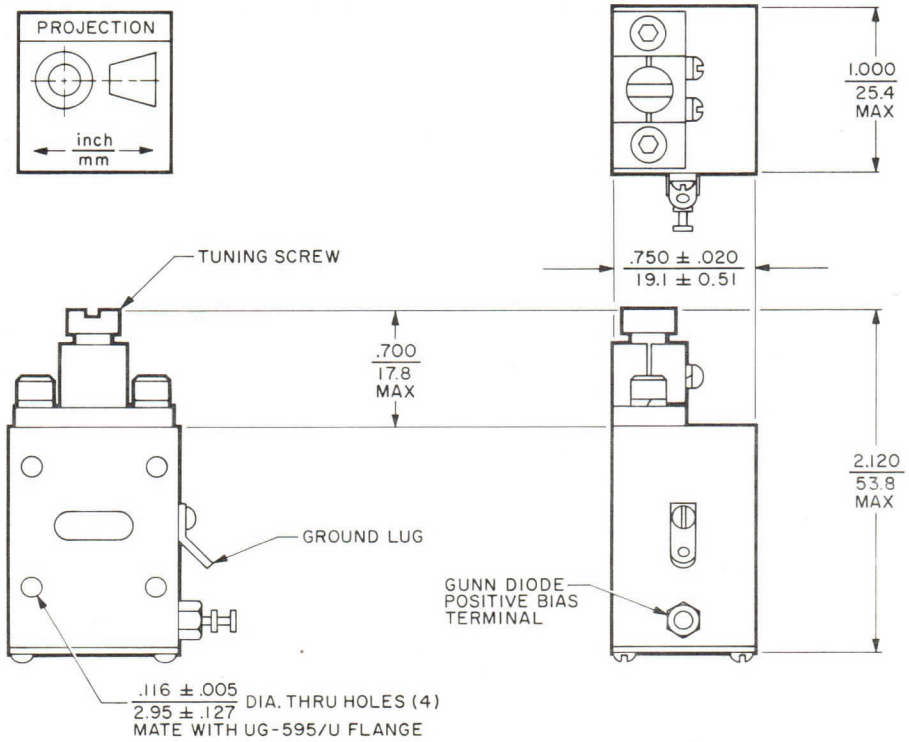

varian
solid state west division

TECHNICAL DATA

VSX-9005
Series
GUNN-EFFECT OSCILLATOR
9.4-10.6 GHz

DESCRIPTION

VSX-9005 Gunn-effect oscillators are specially designed for use in traffic radars, intrusion alarm systems, and commercial applications where low-cost reliable microwave sources are required. Each model operates at a fixed frequency between 9.4 and 10.6 gigahertz and delivers at least the minimum specified CW output over the wide operating temperature range of -20 to +60° C. These oscillators generate a clean rf spectrum with harmonic and spurious outputs suppressed well below the maximum levels specified in FCC regulations, Section 89.107 (C) (3).

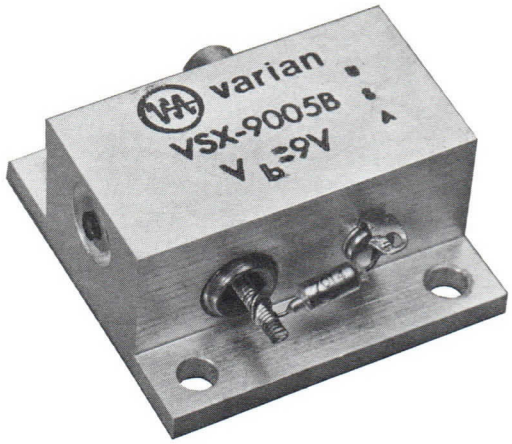

GENERAL CHARACTERISTICS[1]

ELECTRICAL	VSX-9005B	VSX-9005C	VSX-9005D
Fixed Frequency, ±5 MHz	10.525	9.6	10.525 GHz
Output Power, minimum	100	100	25 mW
Input Voltage, maximum	10	10	10 V
Input Current, maximum			
Operating	0.80	0.80	0.60 A
Threshold	1.05	1.05	0.85 A
Frequency Stability	±25	±25	±25 MHz
Harmonic and Spurious Output, maximum	-13	-13	-13 dBm
VSWR, maximum	1.2:1	1.2:1	1.2:1

PHYSICAL

Dimensions ..... See Outline Drawing
Weight, maximum ..... 3 oz/85 g
Mounting Position ..... Any
Cooling[2] ..... Conduction
RF Output Flange ..... Mates with UG-39/U
DC Connections
Positive ..... Insulated Terminal
Negative ..... Ground Lug

ENVIRONMENTAL

Storage Temperature ..... -54 to +125 °C
Heat Sink Operating Temperature[2] -20 to +60 °C

NOTES:

1. Characteristics are based on performance tests. These figures may change without notice as a result of additional data or product refinement. The Varian Solid State West Division should be consulted before using this information for final equipment design.
2. The operating temperature is measured on the oscillator mounting flange.

OUTLINE DRAWING

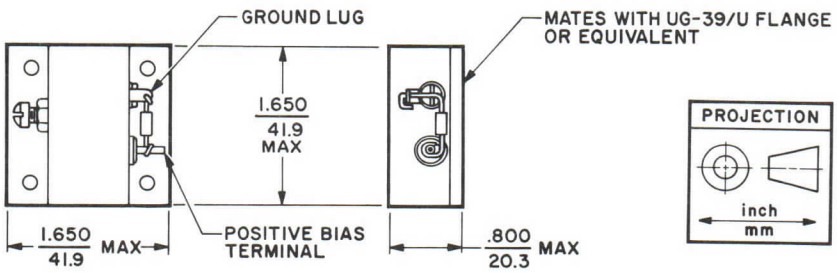

3201 5/74

Printed in U.S.A.

varian
solid state west division

TECHNICAL DATA

VSC-9009
Series

SOLID STATE OSCILLATORS

5.4-8.0 GHz

DESCRIPTION

VSC-9009 Gunn-effect oscillators are used primarily as local oscillators in radar and communication systems. They are also suitable for a wide variety of general-purpose applications. Models in the series deliver CW output power ranging from 5 to 250 milliwatts. Each oscillator, however, is factory adjusted to operate at only one selected combination of frequency and output power. Standard models are tunable ± 100 megahertz from any specified frequency between 5.4 to 8.0 gigahertz. Upon request, special versions can be furnished either fixed tuned or with a tunability of ± 350 megahertz or more. Careful design and selection of materials provide outstanding frequency and power stability. Cooling is achieved by attaching the oscillator to a heat sink which maintains the oscillator temperature at 50° C or less.

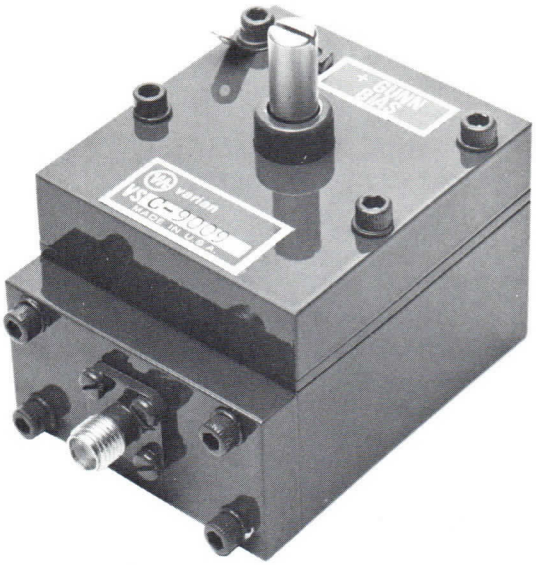

GENERAL CHARACTERISTICS[1]

RF PERFORMANCE

Output Power[2] (mW)	Maximum Bias Current (Adc)	Maximum Threshold Current (Adc)	Maximum Pushing Factor[3] (MHz/V)	Maximum Pulling Factor 1.2:1 VSWR (MHz)	Typical FM Noise[4] (Hz rms)	Maximum Freq/Temp Coefficient[5] (ppm/°C)	Type Number[6]
5	0.5	0.75	5	5	5	± 50	VSC-9009S1
10	0.5	0.75	5	5	5	± 50	VSC-9009S2
25	0.5	0.75	5	5	5	± 50	VSC-9009S3
50	0.5	0.75	5	5	5	± 50	VSC-9009S4
75	0.6	0.80	10	10	10	± 50	VSC-9009S5
100	0.6	0.80	10	10	10	± 50	VSC-9009S6
150	0.8	1.00	10	15	10	± 50	VSC-9009S7
200	1.0	1.30	10	15	20	± 50	VSC-9009S8
250	1.0	1.30	10	15	20	± 50	VSC-9009S9

3011 12/73

Printed in U.S.A.

GENERAL CHARACTERISTICS[1] (Con't)

ELECTRICAL

Frequency Range[2]	5.4-8.0 GHz
Tuning Range, min[7]	± 100 MHz
Bias Voltage	
Typical	12 Vdc
Maximum	18 Vdc
Power/Temperature Coefficient, max	0.04 dB/°C
Power Supply Regulation, max	0.01 %
Load VSWR, max	1.2:1

PHYSICAL

Dimensions	See Outline Drawing
Weight, approx	4 oz
Mounting Position	Any
Cooling	Conduction
Heat Sink Temperature Range[7]	0 to 50 °C
Connections	See Outline Drawing

CHARACTERISTIC CURVE

Typical Relative Values

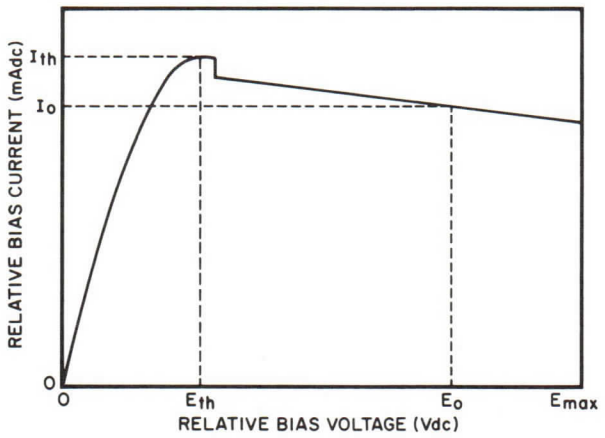

NOTES:

1. Characteristics and performance values are based on performance tests. These figures may change without notice as a result of additional data or product refinement. Consult the Varian Solid State West Division before using this information for final equipment design.

2. When ordering, specify the exact center frequency and output power desired. Each oscillator is factory adjusted to provide optimum performance at only one combination of these parameters. In addition, specify whether the unit is to be fixed tuned or tunable; if tunable, indicate the tuning range desired.

3. Measured from the operating bias voltage to 1 volt below the operating bias voltage.

4. Measured in a 1-kHz bandwidth 10 kHz from the carrier.

5. Versions having smaller Frequency/Temperature Coefficients can be supplied on request.

6. The suffixes "S1", etc., denote models for operation at different power levels within various segments of the total frequency coverage of the series. When an order is received, the alpha-numeric suffix will be replaced by a two-letter suffix defining the exact center frequency and power level specified.

7. Models having other ranges can be furnished on request.

OUTLINE DRAWING

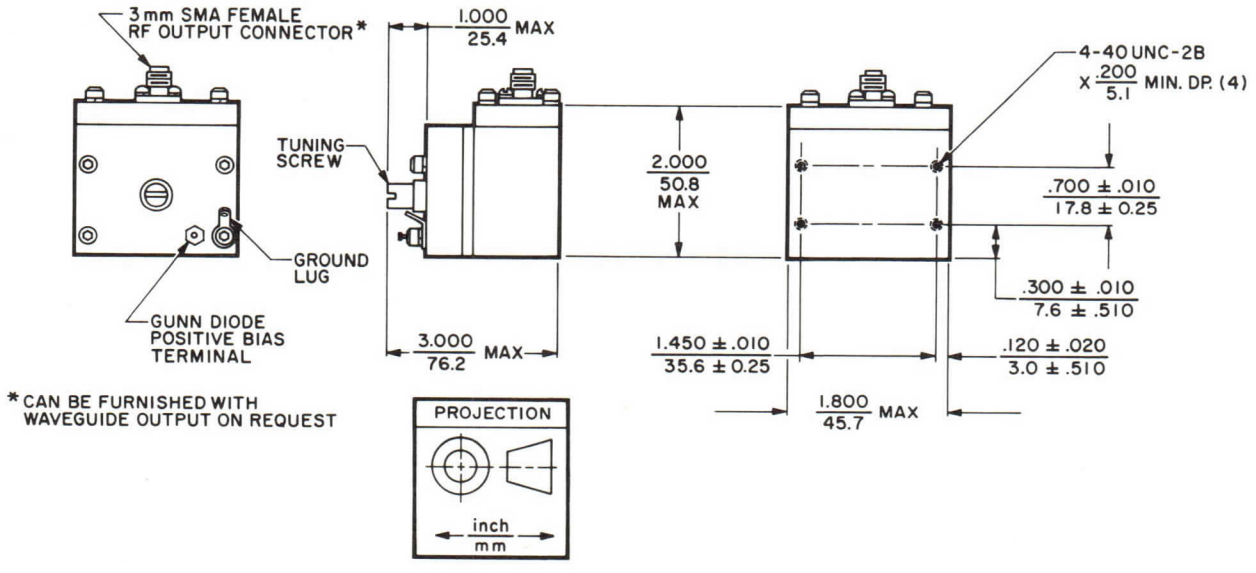

varian
solid state west division

TECHNICAL DATA

VSA-9010
Series
SOLID STATE OSCILLATORS
26.5-42.0 GHz

DESCRIPTION

VSA-9010 Gunn-effect oscillators are used primarily as pump sources for parametric amplifiers. They are also suitable for a wide variety of general-purpose applications. Models in the series deliver CW output power ranging from 5 to 150 milliwatts. Each oscillator, however, is factory adjusted to operate at only one selected combination of frequency and output power. Standard models are tunable ± 100 megahertz from any specified frequency between 26.5 to 42.0 gigahertz. Upon request, special versions can be furnished either fixed tuned or with a tunability of ± 350 megahertz or more. Careful design and selection of materials provide outstanding frequency and power stability. Cooling is achieved by attaching the oscillator to a heat sink which maintains the oscillator temperature at 50°C or less.

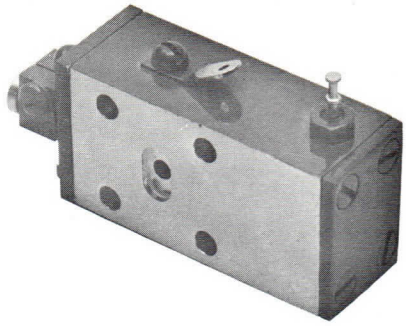

GENERAL CHARACTERISTICS[1]

RF PERFORMANCE

Frequency Range[2] (GHz)	Output Power[2] (mW)	Maximum Bias Current (Adc)	Maximum Threshold Current (Adc)	Maximum Pushing Factor[3] (MHz/V)	Maximum Pulling Factor, 1.2:1 VSWR (MHz)	Typical FM Noise[4] (Hz rms)	Maximum Freq/Temp Coefficient (MHz/°C)	Type Number[5]
26.5-30.0	5	0.6	0.9	50	15	30	1	VSA-9010 S1
26.5-30.0	10	0.6	0.9	50	15	30	1	VSA-9010 S2
26.5-30.0	25	0.6	0.9	50	20	30	1	VSA-9010 S3
26.5-30.0	50	0.6	0.9	50	20	30	1	VSA-9010 S4
26.5-30.0	75	1.2	1.5	50	30	40	1	VSA-9010 S5
26.5-30.0	100	1.2	1.5	50	30	40	1	VSA-9010 S6
26.5-30.0	150	1.2	1.5	75	30	60	1.5	VSA-9010 S7
30.0-35.0	5	0.6	0.9	50	15	30	1	VSA-9010T1
30.0-35.0	10	0.6	0.9	50	15	30	1	VSA-9010T2
30.0-35.0	25	0.6	0.9	50	20	30	1	VSA-9010T3
30.0-35.0	50	0.6	0.9	50	20	30	1	VSA-9010T4
30.0-35.0	75	1.2	1.5	50	30	40	1	VSA-9010T5
30.0-35.0	100	1.2	1.5	50	30	40	1	VSA-9010T6
30.0-35.0	150	1.2	1.5	75	30	60	1.5	VSA-9010T7
35.0-42.0	5	0.6	0.9	50	15	30	1	VSA-9010X1
35.0-42.0	10	0.6	0.9	50	15	30	1	VSA-9010X2
35.0-42.0	25	0.6	0.9	50	20	30	1	VSA-9010X3
35.0-42.0	50	0.6	0.9	50	20	30	1	VSA-9010X4
35.0-42.0	75	1.2	1.5	50	30	40	1	VSA-9010X5
35.0-42.0	100	1.2	1.5	50	30	40	1	VSA-9010X6
35.0-42.0	150	1.2	1.5	75	30	60	1.5	VSA-9010X7

3003 4/73

Printed in U.S.A.

GENERAL CHARACTERISTICS (con't.)

ELECTRICAL

Frequency Coverage	26.5 to 42.0 GHz
Tuning Range, min[6]	± 100 MHz
Bias Voltage, typ	4.5 Vdc
Bias Voltage, above 32 GHz, max	6.0 Vdc
Bias Voltage, up to 32 GHz, max.	7.0 Vdc
Power/Temperature Coefficient, max	± 0.04 dB/°C
Power Supply Regulation, max	0.01 %
Load VSWR, max	1.2:1

PHYSICAL

Dimensions	See Outline Drawing
Weight, approx	4 oz
Mounting Position	Any
Cooling	Conduction
Heat Sink Temperature Range[6]	0 to 50 °C
Connections	See Outline Drawing

CHARACTERISTIC CURVE

Typical relative values

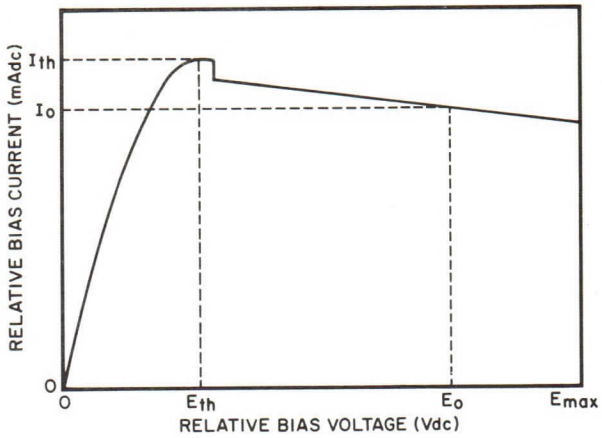

NOTES:

1. Characteristic and performance values are based on performance tests. These figures may change without notice as a result of additional data or product refinement. Consult the Varian Solid State West Division before using this information for equipment design.

2. When ordering, specify the exact center frequency and output power desired. Each oscillator is factory adjusted to provide optimum performance at only one combination of these parameters. In addition, specify whether the unit is to be fixed tuned or tunable; if tunable, indicate the tuning range desired.

3. Measured from the operating bias voltage to 1 volt below the operating bias voltage.

4. Measured in a 1-kHz bandwidth 10 kHz from the carrier.

5. The suffixes, "S1", "T3", and "X6", etc., denote models for operation at different power levels within various segments of the total frequency coverage of the series. When an order is received, the alpha-numeric suffix will be replaced by a two-letter suffix defining the exact center frequency and power level specified.

6. Models having other ranges can be furnished on request.

OUTLINE DRAWINGS

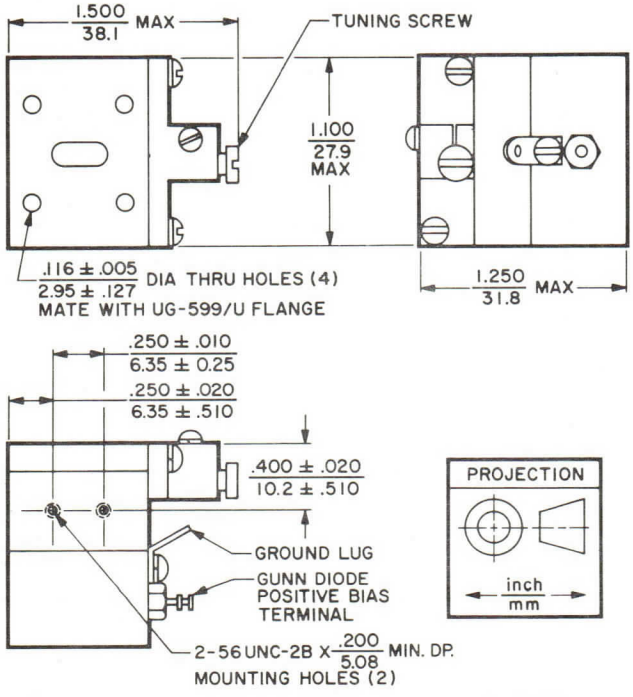

VSA-9010S7, VSA-9010T7, & VSA-9010X7

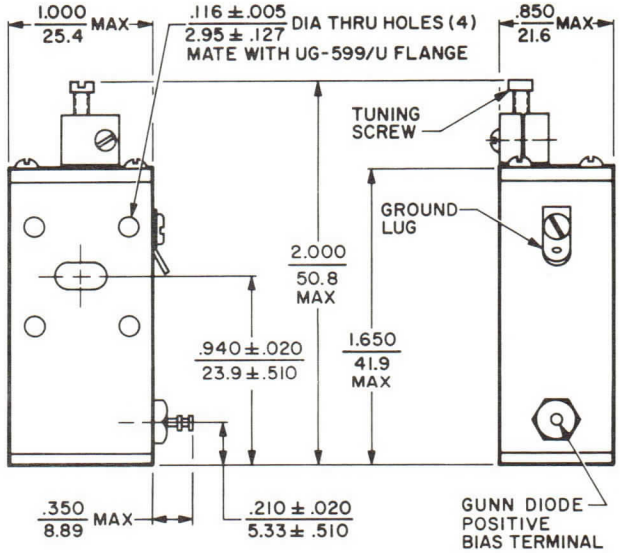

ALL OTHER VSA-9010 MODELS

varian
solid state west division

TECHNICAL DATA

VSQ-9021
Series

SOLID STATE OSCILLATORS

42-50 GHz

DESCRIPTION

VSQ-9021 Gunn-effect oscillators are used primarily as pump sources for parametric amplifiers. They are also suitable for a wide variety of general-purpose applications. Models in the series deliver CW output power ranging from 5 to 150 milliwatts. Each oscillator, however, is factory adjusted to operate at only one selected combination of frequency and output power. Standard models are tunable ±100 megahertz from any specified frequency between 42 and 50 gigahertz. Upon request, special versions can be furnished either fixed tuned or with a tunability of ± 350 megahertz or more. Careful design and selection of materials provide outstanding frequency and power stability.

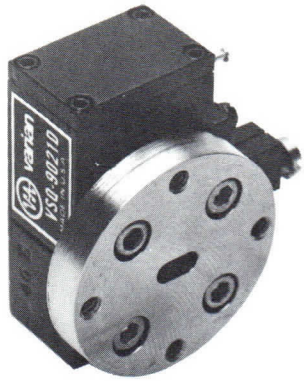

Cooling is achieved by attaching the oscillator to a heat sink which maintains the oscillator temperature at 50°C or less.

GENERAL CHARACTERISTICS[1]

RF PERFORMANCE

Output Power[2] (mW)	Maximum Bias Current (Adc)	Maximum Threshold Current (Adc)	Maximum Pushing Factor[3] (MHz/V)	Maximum Pulling Factor 1.2:1 VSWR (MHz)	Typical FM Noise[4] (Hz rms)	Maximum Freq/Temp Coefficient (MHz/°C)	Type Number[5]
5	0.5	0.75	50	50	30	1	VSQ-9021S1
10	0.5	0.75	50	50	30	1	VSQ-9021S2
25	0.5	0.75	50	50	30	1	VSQ-9021S3
50	1.5	2.00	80	100	50	1	VSQ-9021S4
75	1.5	2.00	80	100	50	1.5	VSQ-9021S5
100	1.5	2.00	80	100	50	1.5	VSQ-9021S6
150	2.0	2.50	80	100	80	1.5	VSQ-9021S7

ELECTRICAL

Frequency Range	42-50 GHz
Tuning Range, min[6]	± 100 MHz
Bias Voltage	
Typical	4.0 Vdc
Maximum	5.5 Vdc
Power/Temperature Coefficient, max	0.04 dB/°C
Power Supply Regulation, max	0.01 %
Load VSWR, max	1.2:1

PHYSICAL

Dimensions	See Outline Drawing
Weight, approx	4 oz
Mounting Position	Any
Cooling	Conduction
Heat Sink Temperature Range[6]	0 to 50 °C
Connections	See Outline Drawing

3141 3/74

Printed in U.S.A.

CHARACTERISTIC CURVE

Typical relative values

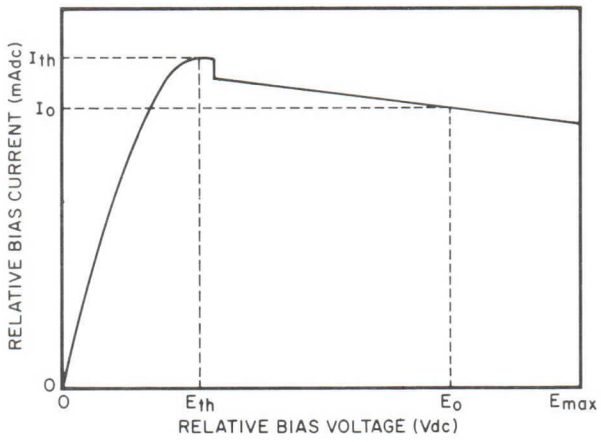

NOTES:

1. Characteristics and performance values are based on performance tests. These figures may change without notice as a result of additional data or product refinement. Consult the Varian Solid State West Division before using this information for equipment design.
2. When ordering, specify the exact center frequency and output power desired. Each oscillator is factory adjusted to provide optimum performance at only one combination of these parameters. In addition, specify whether the unit is to be fixed tuned or tunable; if tunable, indicate the tuning range desired. The VSQ-9021S7 model is available between the frequency range of 42 and 43 gigahertz.
3. Measured from the operating bias voltage to 1 volt below the operating bias voltage.
4. Measured in a 1-kHz bandwidth 10 kHz from the carrier.
5. The suffixes "S1", etc., denote models for operating at different power levels within various segments of the total frequency coverage of the series. When an order is received, the alpha-numeric suffix will be replaced by a two-letter suffix defining the exact center frequency and power level specified.
6. Models having other ranges can be furnished on request.

OUTLINE DRAWINGS

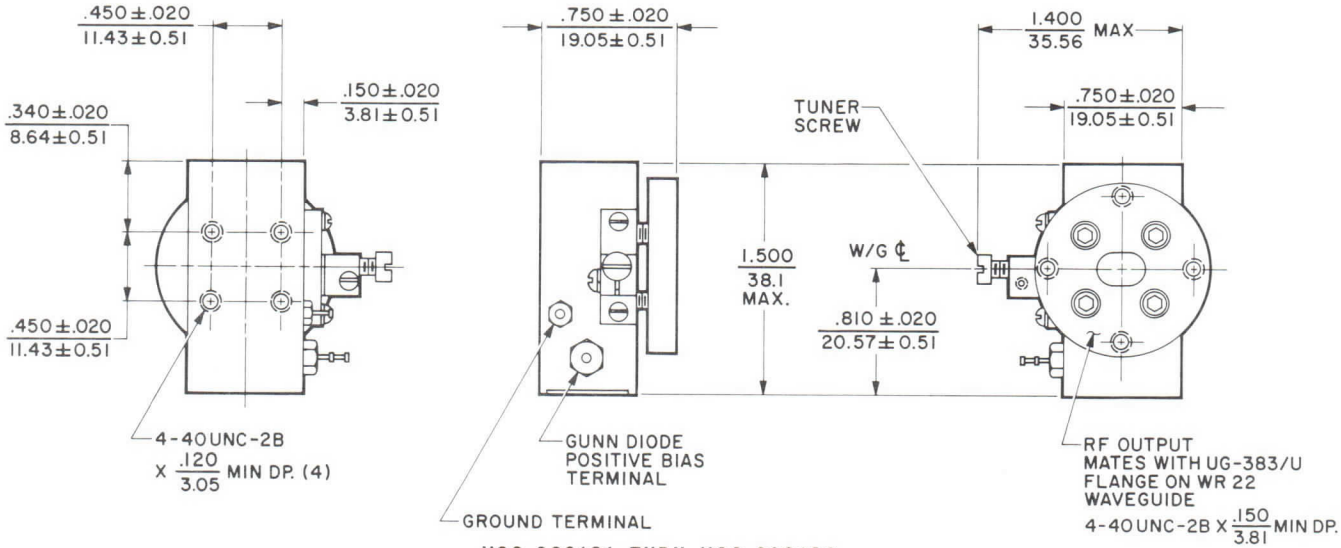

VSQ-9021S1 THRU VSQ-9021S6

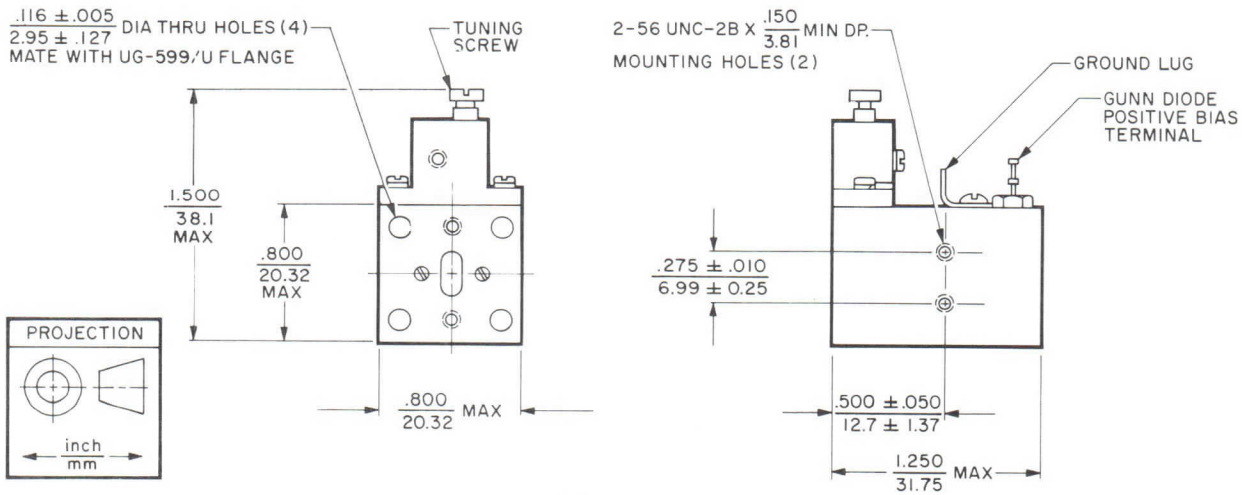

VSQ-9021S7

varian
solid state west

TECHNICAL DATA

VSQ-9035
Series
SOLID STATE
MICROWAVE SOURCES
40-50 GHz
100 mW

DESCRIPTION

The VSQ-9035 is an exceptionally-stable, solid-state microwave power source designed specifically for parametric-amplifier pump service. Each model consists of a low-noise Gunn-effect oscillator, series voltage regulator, and output load isolator combined in a single, lightweight package. This unique combination delivers 100 mW or more at any frequency selected between 40 and 50 GHz.

The VSQ-9035 provides three significant advantages over the basic Gunn-effect oscillator.

- Superior power stability with temperature change — With a heat-sink surface-temperature variation of 10°C, the maximum power variation with temperature is 0.01 dB/°C compared to 0.05 dB/°C for basic Gunn-effect oscillators.
- Operates from poorly-regulated or noisy power supplies — The integral series voltage regulator eliminates the need for a highly-regulated, adjustable power supply. Optimum performance of standard models is achieved with any input voltage between 12 and 15 Vdc. Special versions can be furnished for operation at 28 Vdc or 115 Vac.
- Operates into a poorly-matched load without adverse power loss — The matched voltage regulator and oscillator are mated to an output load isolator to minimize power loss under poorly-matched load conditions. This integrated assembly produces long life and excellent reliability with efficiency comparable to that of klystron oscillators.

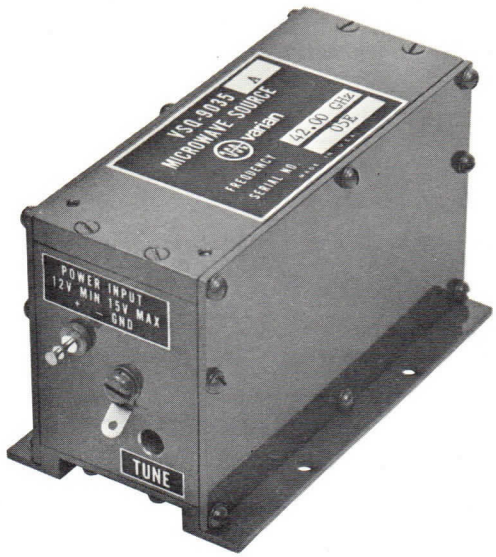

VSQ-9035 models can also be supplied for general-purpose applications. These models provide somewhat reduced power-temperature stability and require less heat-sink temperature control than models used as parametric amplifier pumps.

GENERAL CHARACTERISTICS[1,2]

ELECTRICAL

Center Frequencies	40 to 50 GHz
Tuning Range, mechanical, each	±100 MHz
Output Power, min	100 mW
Input Voltage, regulated ±10%	12 to 15 Vdc
Noise and Ripple, peak-to-peak	100 mV
Input Current, max	1.5 Adc
Power/ Temperature Coefficient, max	0.01 dB/°C
Frequency/Temperature Coefficient, max	1.0 MHz/°C

PHYSICAL

Dimensions	See Outline Drawing
Weight, max	16 oz
Mounting Position	Any
Cooling	Conduction
R-F Output	Mates with UG-599/U Flange
D-C Connections	
Positive	Insulated Terminal
Negative	Ground Lug

ENVIRONMENTAL

Storage Temperature	-54 to +125 °C
Ambient Operating Temperature	0 to +65 °C
Heat Sink Surface Stability, required	±5 °C

2788 6/72

Printed in U.S.A.

NOTES:

1. Characteristic values are based on performance tests. These figures may change without notice as the result of additional data or product refinement. Consult Varian Solid State West before using this information for final equipment design.
2. When ordering, specify the center frequency and input voltage desired.

OPERATING HAZARDS

Read the following and take all necessary precautions to protect personnel. Safe operating conditions are the responsibility of the equipment designer and the user.

Microwave Radiation. Exposure of the human body to microwave radiation in excess of 1 milliwatt per square centimeter is unsafe and can result in blindness or other injury. Personnel must be fully protected from the microwave energy which radiates from this device. Output r-f connections must be r-f leakproof and properly engaged. Never operate this device without a microwave-energy-absorbing load attached. Personnel must be prevented from looking into its associated antenna while such a device is energized. (Ref. Proc. IRE, Vol. 49, No. 2, pp. 427-447, Feb. 1961).

Equipment must be designed to fully safeguard all personnel from these hazards. Labels and caution notices must be provided on equipment and in manuals clearly warning of those hazards which cannot be avoided.

OUTLINE DRAWING

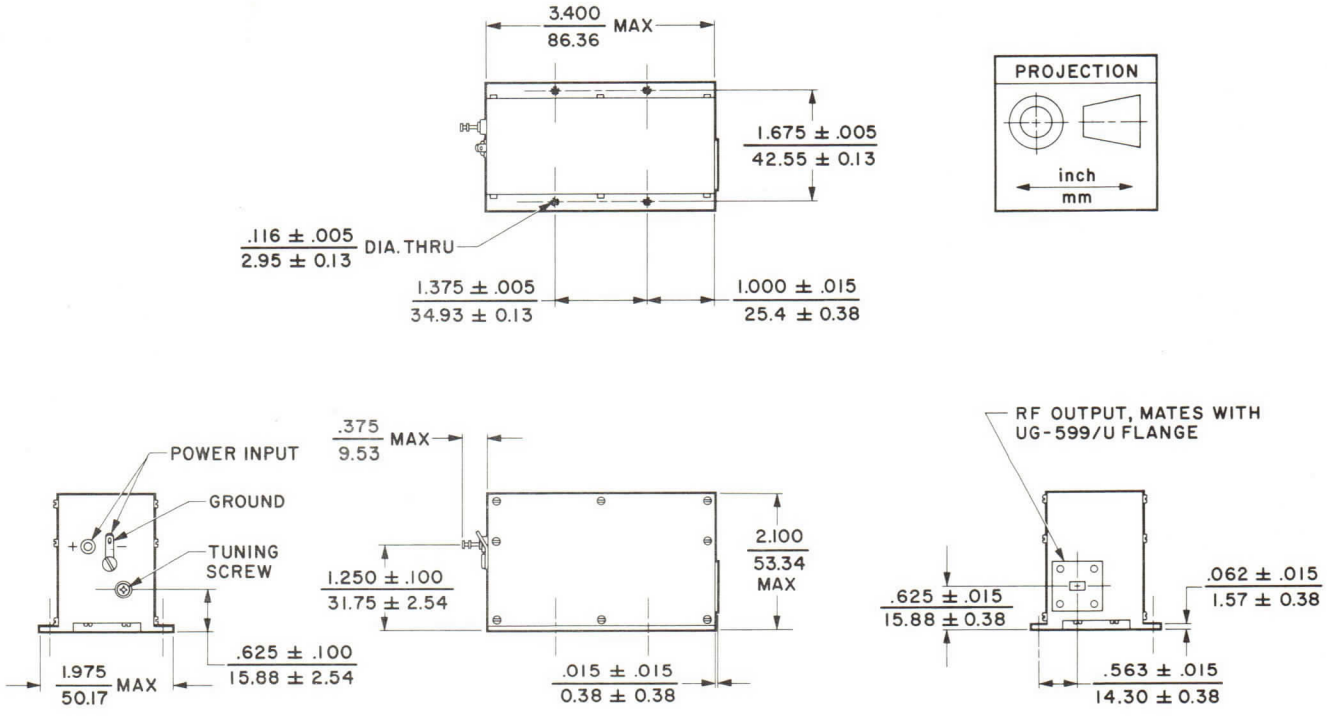

varian

TECHNICAL DATA

VSX-9037A

LINEARLY TUNED VOLTAGE CONTROLLED OSCILLATOR

8.5-9.6 GHz

DESCRIPTION

The VSX-9037A is a linearly-tuned, voltage-controlled oscillator designed specifically for use as a local oscillator in frequency-agile radar systems, where pulse-to-pulse tracking of the transmitter, and frequency stability during the interpulse period are of paramount importance. Its slew rate of 10 gigahertz per microsecond and tuning linearity of ±0.1% of the tuning range insure that it can be coarse tuned to the transmitter frequency, captured by the system's AFC loop, and fine tuned to the exact frequency — all within the pulse period. In addition to its varactor-tuned Gunn oscillator and the associated linearizing circuitry, the VSX-9037A contains voltage regulators, a proportional temperature control circuit, and an r-f load isolator to minimize the effects of varying load and temperature. This compact, lightweight unit is hermetically sealed to allow operation from sea level to 75,000 feet.

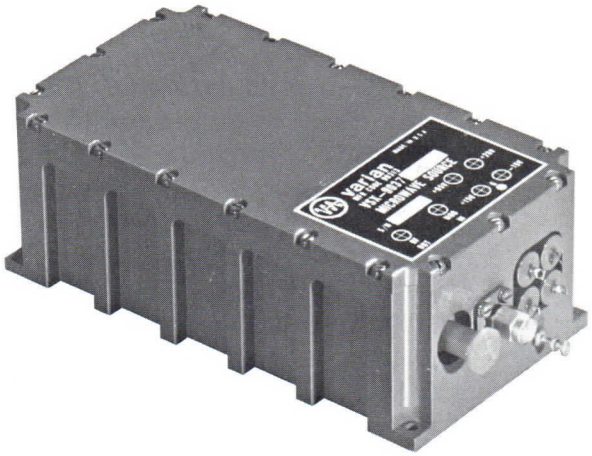

Although the VSX-9037A was designed specifically for frequency-agile radar applications, its performance characteristics make it ideal for use as the exciter or local oscillator in advanced EW systems. For EW applications, optional digital tuning is available.

GENERAL CHARACTERISTICS [1]

ELECTRICAL

Tuning Range	8.5 to 9.6 GHz
Output Power, over tuning range	
Minimum	25 mW
Maximum	50 mW
Power Variation with Temperature, referenced to 25±5°C, max	±0.5 dB
Tuning	
Voltage	0 to 10 Vdc
Input Impedance, paralleled with 30 pF max	1000±100 Ω
Time Delay, max	30 ns
Linearity, max [2]	20 MHz
Slew Rate, min	10 GHz/μs
Post Tuning Drift, max [3]	±3 MHz
Pulling Figure, max 1.25:1 VSWR, all phases	2.5 MHz
Pushing Factor, max	4 MHz/V
Harmonic Response, max	-20 dBc
Heater Voltage	28±1 Vdc
Heater Current, max	3 Adc
Warm-up Time, max	30 min

Operating Power Requirements (3)

Voltage, regulated ±0.2%	+45 Vdc
Current, max	40 mAdc
Voltage, regulated ±0.2%	+15 Vdc
Current, max	40 mAdc
Voltage, regulated ±0.2%	-15 Vdc
Average Current, max	750 mAdc
Threshold Current, max	1.0 Adc

PHYSICAL

Dimensions, max	1.95 x 3 x 5.5 in/ 49.5 x 76.2 x 139.7 mm
Weight	30 oz/852 g
Mounting Position	Any
RF Output Connector	Female SMA
Modulation Input Connector	Male SMA

3625 1/77

Printed in U.S.A.

GENERAL CHARACTERISTICS(continued)

ENVIRONMENTAL

Temperature Range
- Operating ..... -40 to +75 °C
- Non-operating ..... -54 to +95 °C

Humidity, non-operating ..... Up to 100 %

Altitude, max ..... 75,000 ft/22,900 m

Vibration ..... Meets MIL-STD-810, Method 514-22, Curve AA

Shock, 15 G, 11±2 ms, half-sine ..... Meets MIL-STD-202, Method 213

CHARACTERISTIC CURVE

Typical performance values

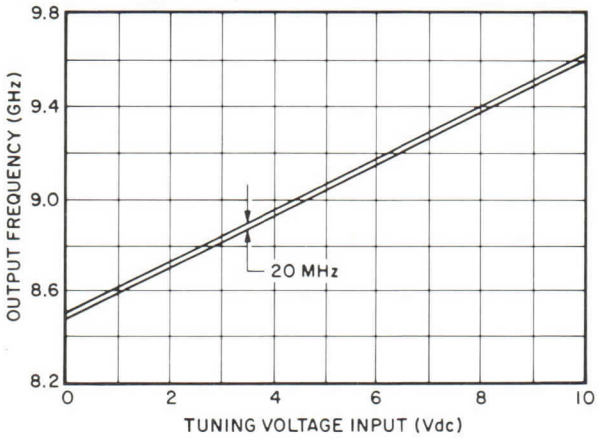

NOTES:

1. Characteristic values are based on performance tests a 25°C unless otherwise specified. These figures may change without notice as a result of additional data or product refinement. The Solid State West Division should be consulted before using this information for final equipment design.

2. The tuning linearity, or accuracy, shall be such that for any given tuning voltage within the tuning voltage range, the frequency shall be within the 20 MHz range shown in the Characteristic Curve, while operating under acceptable environmental conditions.

3. The frequency of the unit, when tuned by a step voltage input, varies no more than ±3 MHz during the 2.5 to 500 μs interval following the tuning voltage step.

OUTLINE DRAWING

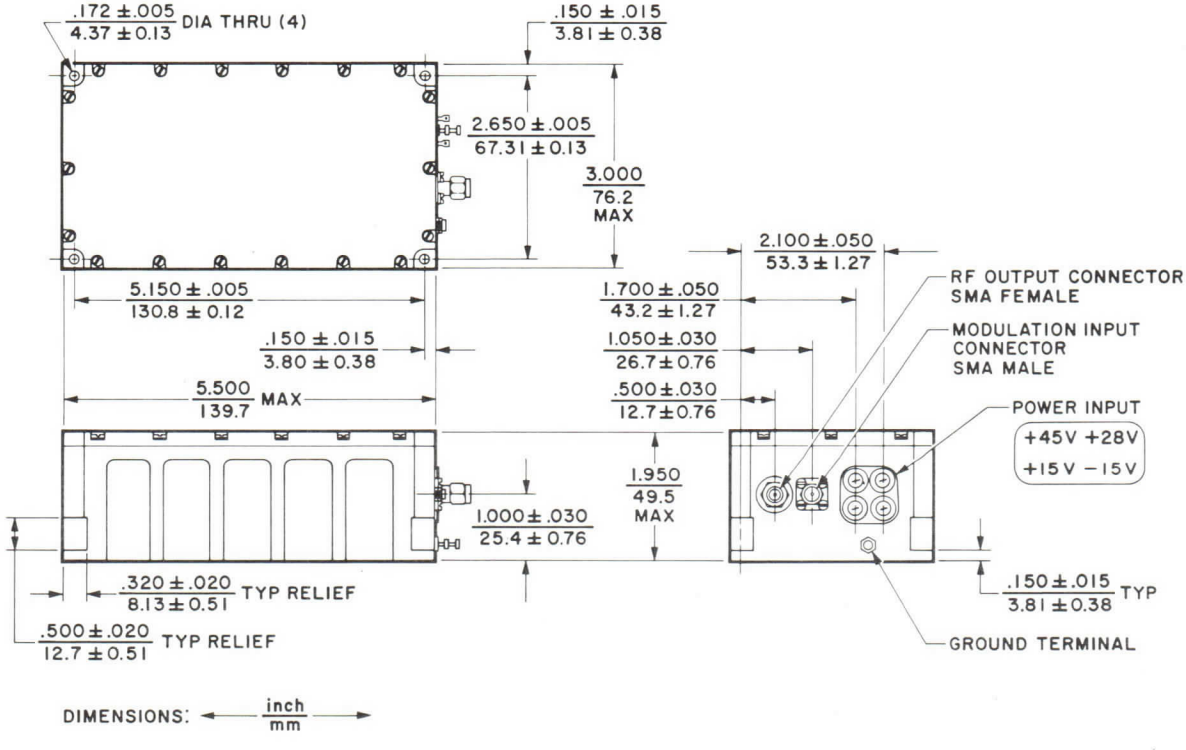

varian
solid state west division

TECHNICAL DATA

VSX-9070
Series

YIG-TUNED
GUNN-EFFECT
OSCILLATORS

DESCRIPTION

VSX-9070 Series YIG-tuned, solid-state, Gunn-effect oscillators are for use as X-band signal sources in commercial and laboratory applications requiring very wide electronic tuning range. Each of these miniature, current-tuned devices delivers a linearly-swept, CW output without discontinuities. Two basic models produce at least 5 or 10 milliwatts, respectively, over the frequency range of 7 to 11 gigahertz. From 8.0 to 12.4 gigahertz, two other units are offered; one delivers at least 10 milliwatts and the other produces 20 milliwatts or more. Versions can be furnished to meet a wide variety of different specifications. Each oscillator requires only two, well-regulated, low-level supplies — a constant-voltage input supply for its Gunn-effect diode, and a variable current supply for its magnetic tuning coil. Noise performance is far superior to thermionic devices of comparable tuning range. Sturdy, compact (10 cubic inches) construction permits operation under adverse environmental conditions.

GENERAL CHARACTERISTICS[1]

ELECTRICAL

Frequency Coverage[2]	6.9 to 12.5 GHz
Output Power, min[3]	
From 7.0 to 11.0 GHz	5/10 mW
From 8.0 to 12.4 GHz	10/20 mW
Output Power Variation[3]	7 dB
Output Impedance	50 Ω
Diodes	
Operating Current, max[4]	700 mAdc
Threshold Current, max[4]	850 mAdc
Operating Voltage, max[4]	18 Vdc
Modulation Sensitivity, max	12 MHz/V
Pulling Figure, at 1.25:1 VSWR, max	± 0.1 %

Magnetic Tuning Coil	
Current, max[4]	600 mAdc
Voltage, max[4]	7 Vdc
Resistance, max	15 Ω
Inductance, at 1 kHz, max	250 mH
Sensitivity, nominal	22 MHz/mAdc
Hysteresis, max	25 MHz
Sweep Rate	440 MHz/ms
Sweep Cycles	200 Hz
Sweep Delay	200 μs
Load VSWR, max[5]	1.25:1

PHYSICAL

Dimensions	See Outline Drawing
Weight, max	1.75 lb
Mounting Position	Any
Cooling[6]	Convection/Conduction
R-F and D-C Connections	See Outline Drawing

ENVIRONMENTAL

Temperature Ranges	
Operating	
Heat Sink[6]	+20 to +65 °C
Ambient	0 to +50 °C
Storage	-54 to +85 °C

2930 1/73

Printed in U.S.A.

CHARACTERISTIC CURVES [1]

Typical Performance Values

TUNING CHARACTERISTICS

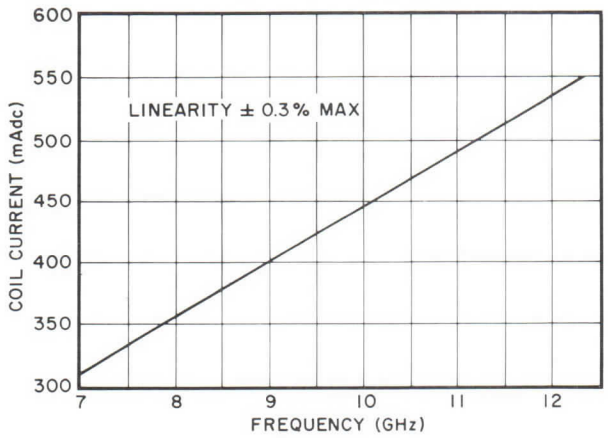

OUTPUT CHARACTERISTICS

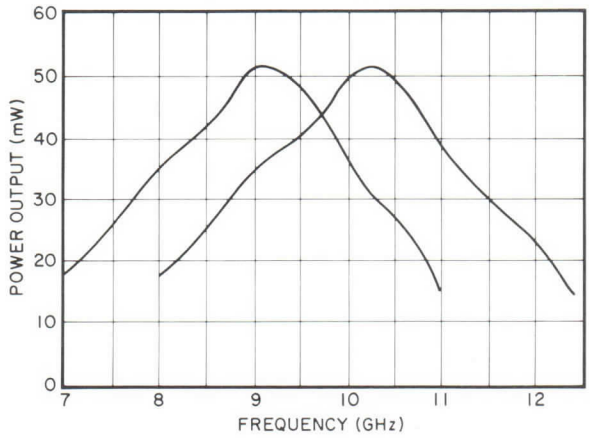

NOTES:

1. General characteristics and characteristic curves are based on performance tests. These figures may change without notice as a result of additional data or product refinement. The Varian Solid State West Division should be consulted before using this information for final equipment design.

2. Each model can be energized and will sustain oscillation at any frequency within its tuning range of 6.9 to 11.1 GHz or 7.9 to 12.5 GHz, depending upon the model selected. Diode voltage should be applied before applying power to the magnetic tuning coil.

3. Measured with the oscillator operating into a load producing a VSWR of 1.1:1 or less.

4. Diode-supply voltage regulation should be 0.01 percent with a ripple of no more than 1 millivolt. The maximum diode voltage specified on the Test Performance Sheet supplied with each unit should never be exceeded. The current-regulated magnetic tuning-coil supply should be well regulated with ripple minimized to inhibit FM from power-supply fluctuations. Tuning-coil current and voltage are for oscillation at the upper frequency limit.

5. Maximum permissible value for specified power output.

6. For optimum performance, each oscillator should be either bolted securely to a large heat sink or provided with an auxiliary air flow directed through an optional finned heat sink adequate to keep the heat-sink temperature within the specified operating range.

OUTLINE DRAWING

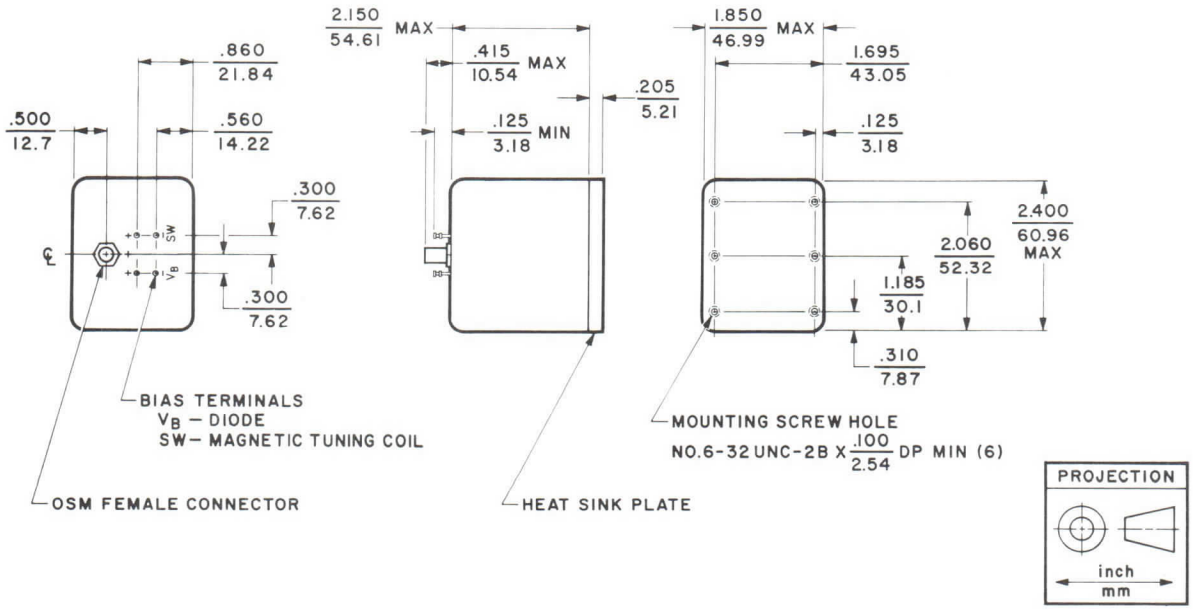

varian
solid state west division

TECHNICAL DATA

VSX-9071
Series

YIG-TUNED
GUNN-EFFECT
OSCILLATORS

DESCRIPTION

VSX-9071 Series YIG-tuned, solid-state, Gunn-effect oscillators are ideal for use as X-band signal sources in commercial and laboratory applications requiring very wide electronic tuning range and frequency modulation capability. Each of these miniature, current-tuned devices delivers a linearly-swept, CW output without discontinuities. Two basic models produce at least 5 to 10 milliwatts, respectively, over the frequency range of 7 to 11 gigahertz. From 8.0 to 12.4 gigahertz, two other units are offered; one delivers at least 10 milliwatts and the other produces 20 milliwatts or more. Versions can be furnished to meet a wide variety of different specifications. Each oscillator includes a tickler coil to permit the signal to be frequency modulated. Three, well-regulated, low-level supplies are required — a constant voltage input supply for the Gunn-effect diode and separate current supplies for the magnetic tuning coil and tickler coil. Noise performance is far superior to thermionic devices of comparable tuning range. Its sturdy, compact (10 cubic inches) construction permits operation under adverse environmental conditions.

GENERAL CHARACTERISTICS[1]

ELECTRICAL

Frequency Coverage[2]	6.9 to 12.5 GHz
Output Power, min[3]	
From 7.0 to 11.0 GHz	5/10 mW
From 8.0 to 12.4 GHz	10/20 mW
Output Power Variation	7 dB
Output Impedance	50 Ω
Diodes	
Operating Current, max[4]	700 mAdc
Threshold Current, max[4]	850 mAdc
Operating Voltage, max[4]	18 Vdc
Modulation Sensitivity, max	12 MHz/V
Tuning Linearity, max	± 0.3 %
Pulling Figure,	
at 1.25:1 VSWR, max	± 0.1 %
Load VSWR, max[5]	1.25:1
Magnetic Tuning Coil	
Current, max[4]	600 mAdc
Voltage, max[4]	7 Vdc
Resistance, max	15 Ω
Inductance, at 1 kHz, max	250 mH
Sensitivity, nominal	22 MHz/mAdc
Hysteresis, max	25 MHz
Sweep Rate	440 MHz/ms
Sweep Cycles	200 Hz
Sweep Delay	200 μs
Tickler Coil	
Current, max	1 Adc
Resistance, max	0.5 Ω
FM Sensitivity, min	
DC to 1 kHz	150 kHz/mA
1 kHz to 100 kHz	-2 dB/decade

PHYSICAL

Dimensions	See Outline Drawing
Weight, max	1.75 lb
Mounting Position	Any
Cooling[6]	Convection/Conduction
Connectors	See Outline Drawing

ENVIRONMENTAL

Temperature Ranges	
Operating	
Heat Sink	+20 to +65 °C
Ambient	0 to +50 °C
Storage	-54 to +85 °C

2931 1/73

Printed in U.S.A.

CHARACTERISTIC CURVES[1]

Typical Performance Values

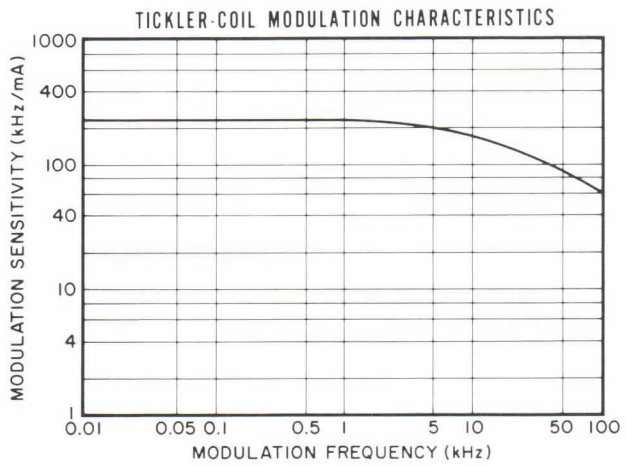

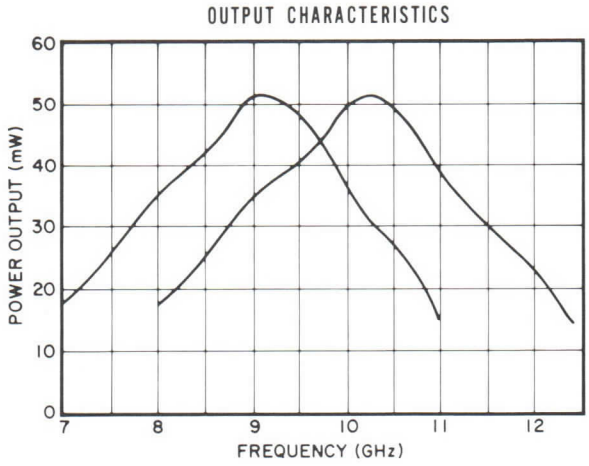

NOTES:

1. General characteristics and characteristic curves are based on performance tests. These figures may change without notice as a result of additional data or product refinement. The Varian Solid State West Division should be consulted before using this information for final equipment design.
2. Each model can be energized and will sustain oscillation at any frequency within its tuning range of 6.9 to 11.1 GHz or 7.9 to 12.5 GHz, depending upon the model selected. Diode voltage should be applied before applying power to the magnetic tuning coil.
3. Measured with the oscillator operating into a load producing a VSWR of 1.1:1 or less.
4. Diode-supply voltage regulation should be 0.01 percent with a ripple of no more than 1 millivolt. The maximum diode voltage specified on the Test Performance Sheet supplied with each unit should never be exceeded. The current-regulated magnetic tuning-coil supply should be well regulated with ripple minimized to inhibit FM from power-supply fluctuations. Tuning-coil current and voltage are for oscillation at the upper frequency limit.
5. Maximum permissible value for specified power output.
6. For optimum performance, each oscillator should be either bolted securely to a large heat sink or provided with an auxiliary air flow directed through an optional finned heat sink adequate to keep the heat-sink temperature within the specified operating range.

OUTLINE DRAWING

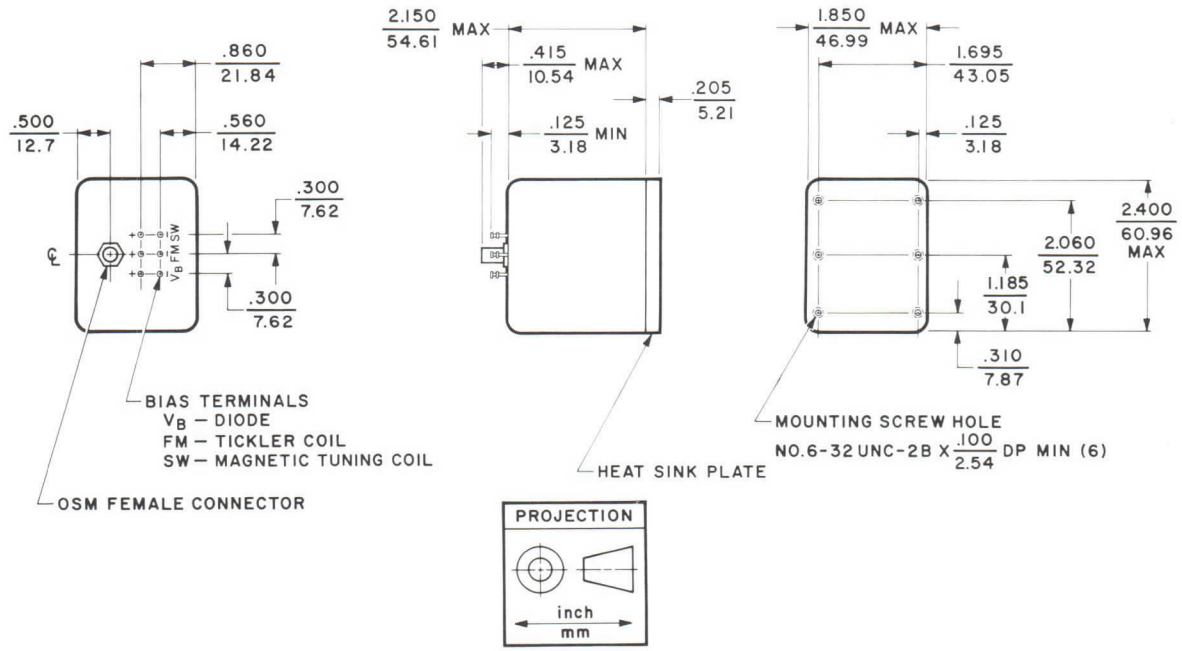

varian
solid state west division

TECHNICAL DATA

VSX-9072
Series

YIG-TUNED
GUNN-EFFECT
OSCILLATORS

DESCRIPTION

VSX-9072 Series YIG-tuned, solid-state, Gunn-effect oscillators are for use as X-band signal sources in commercial and laboratory applications requiring very wide electronic tuning range. Each of these miniature, current-tuned devices delivers a linearly-swept, CW output without discontinuities. Two basic units are offered over the frequency range of 8.0 to 12.4 gigahertz; one delivers at least 10 milliwatts and the other produces 20 milliwatts or more. Versions can be furnished to meet a wide variety of different specifications. Each oscillator includes a tickler coil to permit the signal to be frequency modulated. Three, well-regulated, low-level supplies are required — a constant voltage input supply for the Gunn-effect diode and separate current supplies for the magnetic tuning coil and tickler coil. Noise performance is far superior to thermionic devices of comparable tuning range. Sturdy, compact (10 cubic inches) construction permits operation under adverse environmental conditions.

GENERAL CHARACTERISTICS[1]

ELECTRICAL

Frequency Coverage[2]	7.9 to 12.5 GHz
Output Power, min[3]	
8.0 to 12.4 GHz	10/20 mW
Output Power Variation	7 dB
Output Impedance	50 Ω
Diodes	
Operating Current, max[4]	700 mAdc
Threshold Current, max[4]	850 mAdc
Operating Voltage, max[4]	18 Vdc
Modulation Sensitivity, max	12 MHz/V
Tuning Linearity, max	± 0.3 %
Pulling Figure,	
at 1.25:1 VSWR, max	± 0.1 %
Load VSWR, max[5]	1.25:1

Magnetic Tuning Coil	
Current, max[4]	850 mAdc
Voltage, max[4]	7 Vdc
Resistance, max	8 Ω
Inductance, at 1 kHz, max	100 mH
Sensitivity, nominal	17 MHz/mAdc
Hysteresis, max	25 MHz
Sweep Rate	440 MHz/ms
Sweep Cycles	200 Hz
Sweep Delay	200 μs
Tickler Coil	
Current, max	1 Adc
Resistance, max	0.5 Ω
FM Sensitivity, min	
DC to 1 kHz	150 kHz/mA
1 kHz to 100 kHz	-2 dB/decade

PHYSICAL

Dimensions	See Outline Drawing
Weight, max	1.75 lb
Mounting Position	Any
Cooling[6]	Convection/Conduction
R-F and D-C Connections	See Outline Drawing

ENVIRONMENTAL

Temperature Ranges	
Operating	
Heat Sink	+20 to +65 °C
Ambient	0 to +50 °C
Storage	-54 to +85 °C

2932 1/73

Printed in U.S.A.

CHARACTERISTIC CURVES[1]

Typical Performance Values

TICKLER-COIL MODULATION CHARACTERISTICS

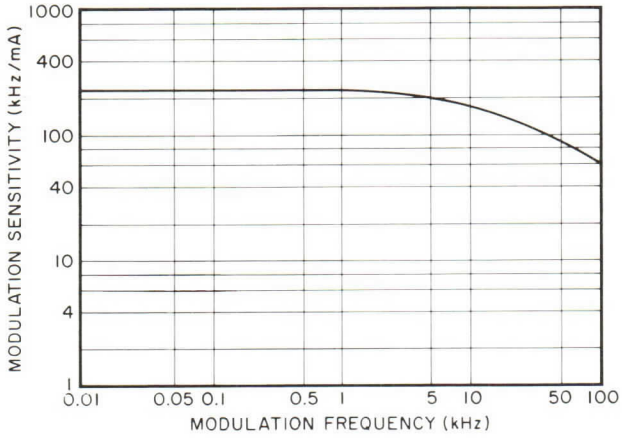

OUTPUT CHARACTERISTICS

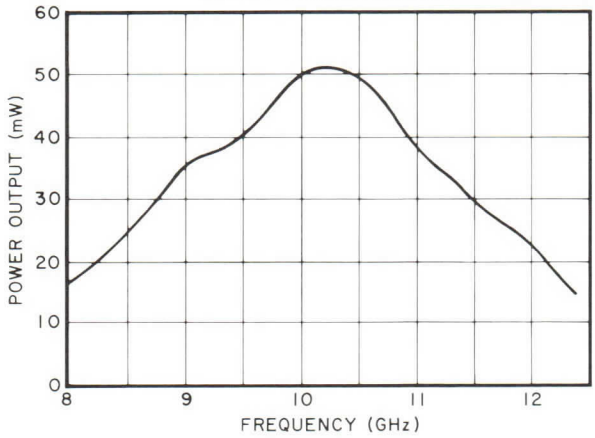

NOTES:

1. General characteristics and characteristic curves are based on performance tests. These figures may change without notice as a result of additional data or product refinement. The Varian Solid State West Division should be consulted before using this information for final equipment design.

2. Each model can be energized and will sustain oscillation at any frequency range within its tunable range of 7.9 to 12.5 GHz, depending upon the model selected. Diode voltage should be applied before applying power to the magnetic tuning coil.

3. Measured with the oscillator operating into a load producing a VSWR of 1.1:1 or less.

4. Diode-supply voltage regulation should be 0.01 percent with a ripple of no more than 1 millivolt. The maximum diode voltage specified on the Test Performance Sheet supplied with each unit should never be exceeded. The current-regulated magnetic tuning-coil supply should be well regulated with ripple minimized to inhibit FM from power-supply fluctuations. Tuning-coil current and voltage are for oscillation at the upper frequency limit.

5. Maximum permissible value for specified power output.

6. For optimum performance, each oscillator should be either bolted securely to a large heat sink or provided with an auxiliary air flow directed through an optional finned heat sink adequate to keep the heat-sink temperature within the specified operating range.

OUTLINE DRAWING

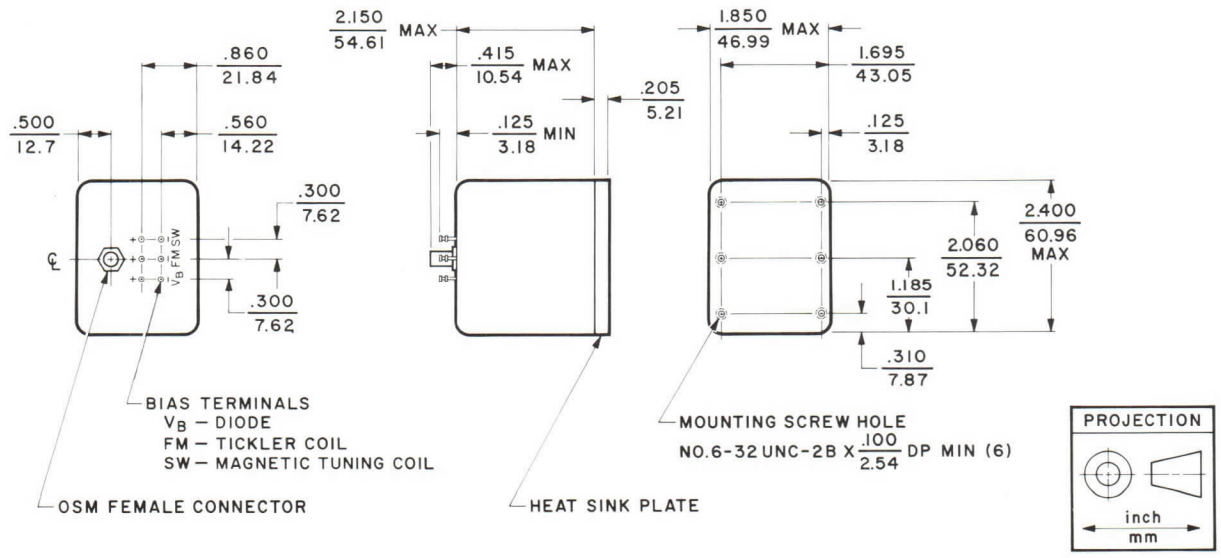

varian
solid state west division

TECHNICAL DATA

VSU-9075
Series

YIG-TUNED
GUNN-EFFECT
OSCILLATORS

DESCRIPTION

VSU-9075 Series YIG-tuned, solid-state, Gunn-effect oscillators are for use as Ku-band signal sources in commercial and laboratory applications requiring very wide electronic tuning range. Each of these miniature, current-tuned devices delivers a linearly-swept, CW output without discontinuities. Some models provide a CW output of 10 milliwatts or more over the frequency range of 10 to 15 gigahertz. From 12.4 to 18.0 gigahertz, two basic units are offered; one delivers at least 10 milliwatts and the other produces 15 milliwatts or more. Versions can be furnished to meet a wide variety of different specifications. Each oscillator requires only two, well-regulated, low-level supplies — a constant-voltage input supply for its Gunn-effect diode, and a variable current supply for its magnetic tuning coil. Noise performance is far superior to thermionic devices of comparable tuning range. Sturdy, compact (10 cubic inches) construction permits operation under adverse environmental conditions.

GENERAL CHARACTERISTICS[1]

ELECTRICAL

Frequency Coverage[2]	9.9 to 18.1 GHz
Output Power, min[3]	
From 10 to 15 GHz	10 mW
From 12.4 to 18.0 GHz	10/15 mW
Output Power Variation	8 dB
Output Impedance	50 Ω
Diodes	
Operating Current, max[4]	700 mAdc
Threshold Current, max[4]	850 mAdc
Operating Voltage, max[4]	16 Vdc
Modulation Sensitivity, max	12 MHz/V
Pulling Figure, at 1.25:1 VSWR, max	± 0.1 %

Magnetic Tuning Coil	
Current, max[4]	850 mAdc
Voltage, max[4]	9 Vdc
Resistance, max	15 Ω
Inductance, at 1 kHz, max	250 mH
Sensitivity, nominal	23 MHz/mAdc
Hysteresis, max	30 MHz
Sweep Rate	560 MHz/ms
Sweep Cycles	200 Hz
Sweep Delay	200 μs
Load VSWR, max[5]	1.25:1

PHYSICAL

Dimensions	See Outline Drawing
Weight, max	1.75 lb
Mounting Position	Any
Cooling[6]	Convection/Conduction
R-F and D-C Connections	See Outline Drawing

ENVIRONMENTAL

Temperature Ranges	
Operating	
Heat Sink[6]	+20 to +65 °C
Ambient	0 to +50 °C
Storage	-54 to +85 °C

2933 1/73

Printed in U.S.A.

CHARACTERISTIC CURVES[1]

Typical Performance Values

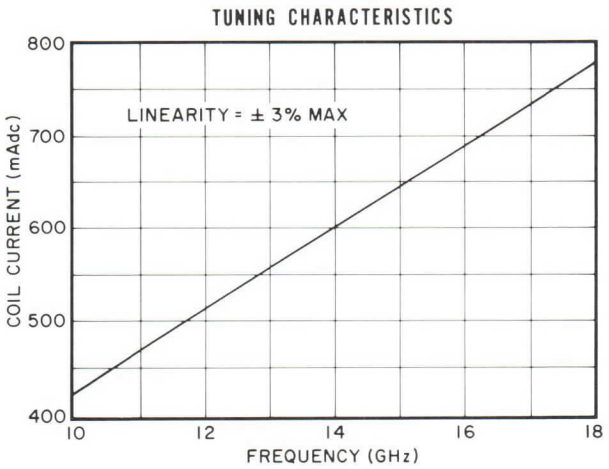

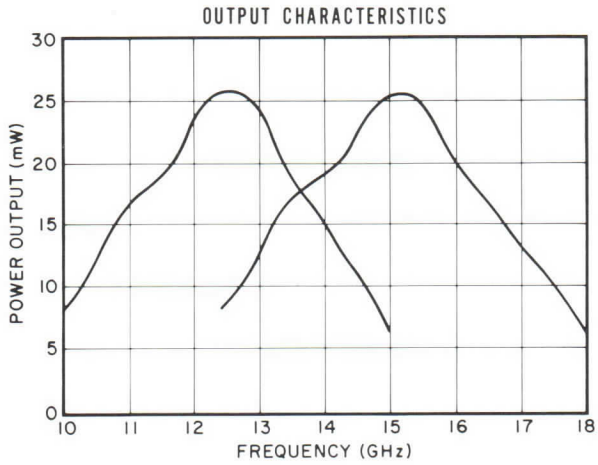

NOTES:

1. General characteristics and characteristic curves are based on performance tests. These figures may change without notice as a result of additional data or product refinement. The Varian Solid State West Division should be consulted before using this information for final equipment design.

2. Each model can be energized and will sustain oscillation at any frequency within its tunable range of 9.9 to 15.1 GHz or 12.3 to 18.1 GHz, depending upon the model selected. Diode voltage should be applied before applying power to the magnetic tuning coil.

3. Measured with the oscillator operating into a load producing a VSWR of 1.1:1 or less.

4. Diode-supply voltage regulation should be 0.01 percent with a ripple of no more than 1 millivolt. The maximum diode voltage specified on the Test Performance Sheet supplied with each unit should never be exceeded. The current-regulated magnetic tuning-coil supply should be well regulated with ripple minimized to inhibit FM from power-supply fluctuations. Tuning-coil current and voltage are for oscillation at the upper frequency limit.

5. Maximum permissible value for specified power output.

6. For optimum performance, each oscillator should be either bolted securely to a large heat sink or provided with an auxiliary air flow directed through an optional finned heat sink adequate to keep the heat-sink temperature within the specified operating range.

OUTLINE DRAWING

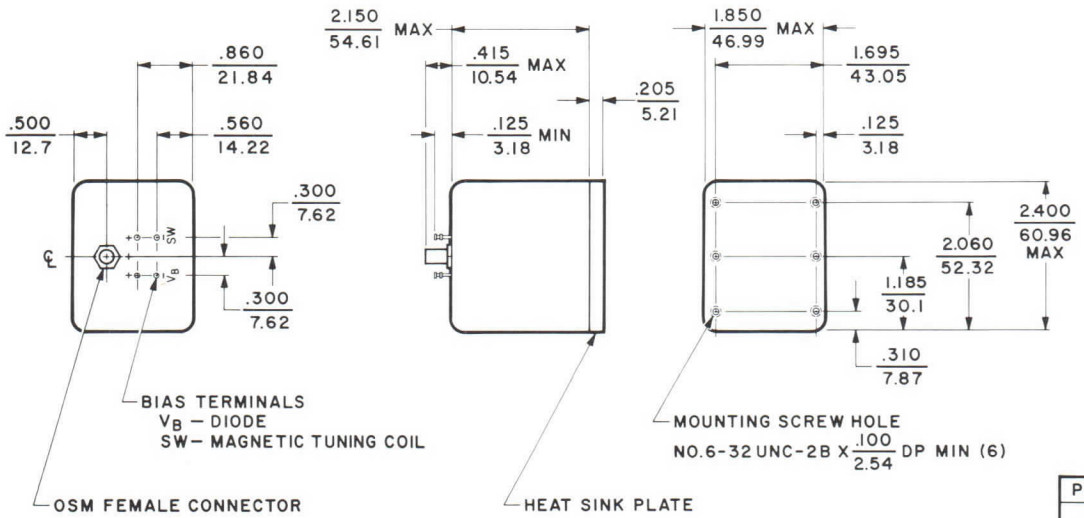

varian
solid state west division

TECHNICAL DATA

VSU-9076
Series

YIG-TUNED
GUNN-EFFECT
OSCILLATORS

DESCRIPTION

VSU-9076 Series YIG-tuned, solid-state, Gunn-effect oscillators are ideal for use as Ku-band signal sources in commercial and laboratory applications requiring very wide electronic tuning range and frequency modulation capability. Each of these miniature, current-tuned devices delivers a linearly-swept, CW output without discontinuities. Some models produce a CW output of 10 milliwatts or more over the frequency range of 10 to 15 gigahertz. For operation from 12.4 to 18.0 gigahertz, two basic units are offered; one delivers at least 10 milliwatts and the other produces 15 milliwatts or more. Versions can be furnished to meet a wide variety of different specifications. Each oscillator includes a tickler coil to permit the signal to be frequency modulated. Three, well-regulated, low-level supplies are required — a constant voltage input supply for the Gunn-effect diode and separate current supplies for the magnetic tuning coil and tickler coil. Noise performance is far superior to thermionic devices of comparable tuning range. Its sturdy, compact (10 cubic inches) construction permits operation under adverse environmental conditions.

GENERAL CHARACTERISTICS [1]

ELECTRICAL

Frequency Coverage[2]	9.9 to 18.1 GHz
Output Power, min[3]	
From 10.0 to 15.0 GHz	10 mW
From 12.4 to 18.0 GHz	10/15 mW
Output Power Variation	8 dB
Output Impedance	50 Ω
Diodes	
Operating Current, max[4]	700 mAdc
Threshold Current, max[4]	850 mAdc
Operating Voltage, max[4]	16 Vdc
Modulation Sensitivity, max	12 MHz/V
Tuning Linearity, max	± 0.3 %
Pulling Figure	
at 1.25:1 VSWR, max	± 0.1 %
Load VSWR, max[5]	1.25:1
Magnetic Tuning Coil	
Current, max[4]	850 mAdc
Voltage, max[4]	9 Vdc
Resistance, max	15 Ω
Inductance, at 1 kHz, max	250 mH
Sensitivity, nominal	23 MHz/mAdc
Hysteresis, max	30 MHz
Sweep Rate	560 MHz/ms
Sweep Cycles	200 Hz
Sweep Delay	200 μs
Tickler Coil	
Current, max	1 Adc
Resistance, max	0.5 Ω
FM Sensitivity, min	
DC to 1 kHz	150 kHz/mA
1 kHz to 100 kHz	-2 dB/decade

PHYSICAL

Dimensions	See Outline Drawing
Weight, max	1.75 lb
Mounting Position	Any
Cooling[6]	Convection/Conduction
Connectors	See Outline Drawing

ENVIRONMENTAL

Temperature Ranges	
Operating	
Heat Sink	+20 to +65 °C
Ambient	0 to +50 °C
Storage	-54 to +85 °C

2934 1/73

Printed in U.S.A.

CHARACTERISTIC CURVES[1]

Typical Performance Values

TICKLER-COIL MODULATION CHARACTERISTICS

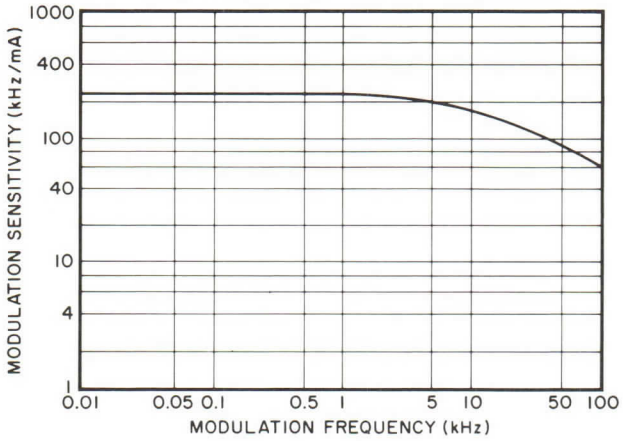

OUTPUT CHARACTERISTICS

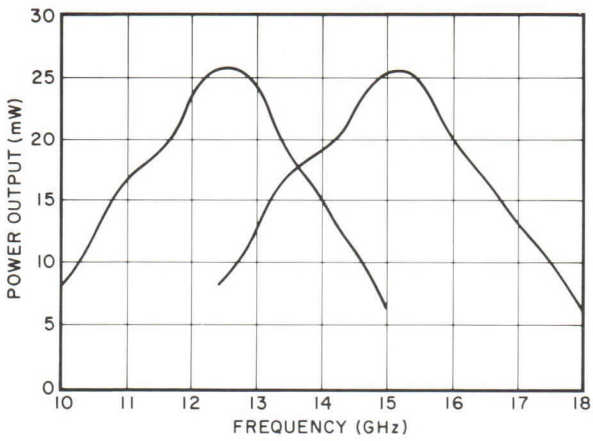

NOTES:

1. General characteristics and characteristic curves are based on performance tests. These figures may change without notice as a result of additional data or product refinement. The Varian Solid State West Division should be consulted before using this information for final equipment design.

2. Each model can be energized and will sustain oscillation at any frequency within its tunable range of 9.9 to 15.1 GHz or 12.3 to 18.1 GHz, depending upon the model selected. Diode voltage should be applied before applying power to the magnetic tuning coil.

3. Measured with the oscillator operating into a load producing a VSWR of 1.1:1 or less.

4. Diode-supply voltage regulation should be 0.01 percent with a ripple of no more than 1 millivolt. The maximum diode voltage specified on the Test Performance Sheet supplied with each unit should never be exceeded. The current-regulated magnetic tuning-coil supply should be well regulated with ripple minimized to inhibit FM from power-supply fluctuations. Tuning-coil current and voltage are for oscillation at the upper frequency limit.

5. Maximum permissible value for specified power output.

6. For optimum performance, each oscillator should be either bolted securely to a large heat sink or provided with an auxiliary air flow directed through an optional finned heat sink adequate to keep the heat-sink temperature within the specified operating range.

OUTLINE DRAWING

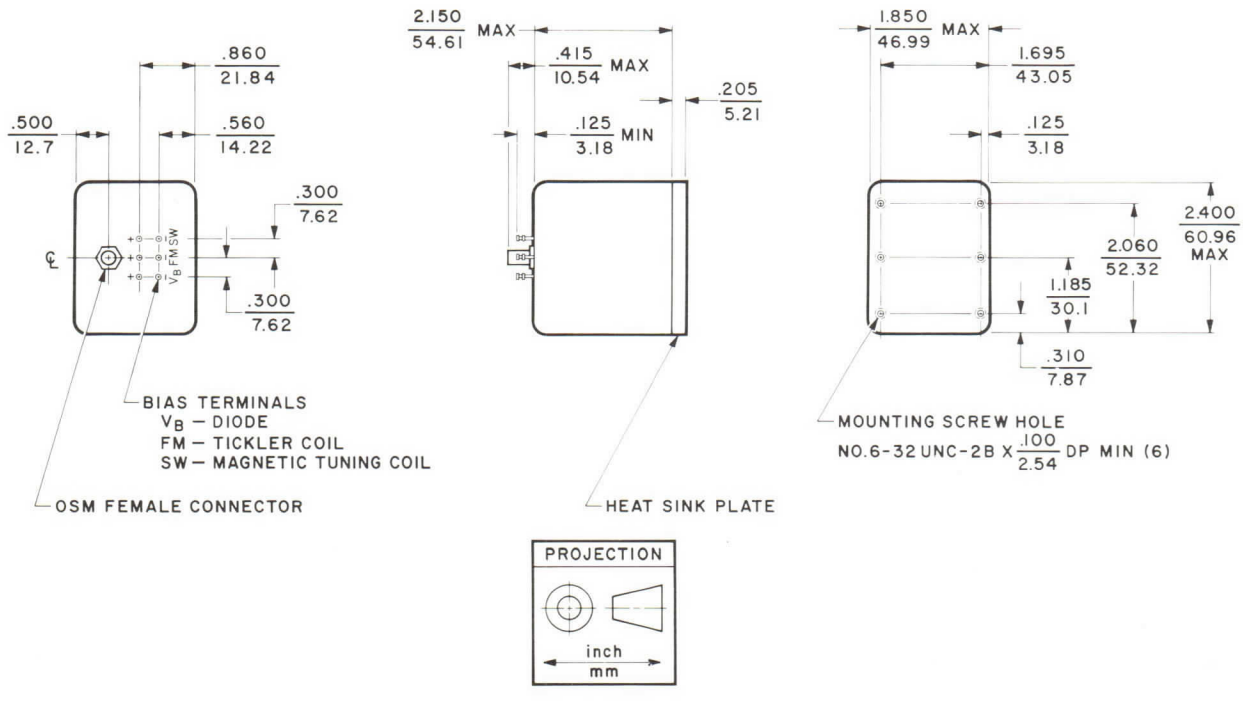

varian
solid state west division

TECHNICAL DATA

VSU-9077
Series

YIG-TUNED
GUNN-EFFECT
OSCILLATORS

DESCRIPTION

VSU-9077 Series YIG-tuned, solid-state, Gunn-effect oscillators are for use as Ku-band signal sources in commercial and laboratory applications requiring very wide electronic tuning range. Each of these miniature, current-tuned devices delivers a linearly-swept, CW output without discontinuities. Two basic units are offered over the frequency range of 12.4 to 18.0 gigahertz; one delivers at least 10 milliwatts and the other produces 15 milliwatts or more. Versions can be furnished to meet a wide variety of different specifications. Each oscillator includes a tickler coil to permit the signal to be frequency modulated. Three, well-regulated, low-level supplies are required — a constant voltage input supply for the Gunn-effect diode and separate current supplies for the magnetic tuning coil and tickler coil. Noise performance is far superior to thermionic devices of comparable tuning range. Sturdy, compact (10 cubic inches) construction permits operation under adverse environmental conditions.

GENERAL CHARACTERISTICS [1]

ELECTRICAL

Frequency Coverage[2]	12.3 to 18.1 GHz
Output Power, min	
12.4 to 18.0 GHz	10/15 mW
Output Power Variation	8 dB
Output Impedance	50 Ω
Diodes	
Operating Current, max[4]	700 mAdc
Threshold Current, max[4]	850 mAdc
Operating Voltage, max[4]	16 Vdc
Modulation Sensitivity, max	12 MHz/V
Tuning Linearity, max	± 0.3 %
Pulling Figure	
at 1.25:1 VSWR, max	± 0.1 %
Load VSWR, max[5]	1.25:1
Magnetic Tuning Coil	
Current, max[4]	1100 mAdc
Voltage, max[4]	8 Vdc
Resistance, max	8 Ω
Inductance, at 1 kHz, max	100 mH
Sensitivity, nominal	18 MHz/mAdc
Hysteresis, max	30 MHz
Sweep Rate	560 MHz/ms
Sweep Cycles	200 Hz
Sweep Delay	200 μs
Tickler Coil	
Current, max	1 Adc
Resistance, max	0.5 Ω
FM Sensitivity, min	
DC to 1 kHz	150 kHz/mA
1 kHz to 100 kHz	-2 dB/decade

PHYSICAL

Dimensions	See Outline Drawing
Weight, max	1.75 lb
Mounting Position	Any
Cooling[6]	Convection/Conduction
R-F and D-C Connections	See Outline Drawing

ENVIRONMENTAL

Temperature Ranges	
Operating	
Heat Sink	+20 to +65 °C
Ambient	0 to +50 °C
Storage	-54 to +85 °C

2935 1/73

Printed in U.S.A.

CHARACTERISTIC CURVES [1]

Typical Performance Values

TICKLER-COIL MODULATION CHARACTERISTICS

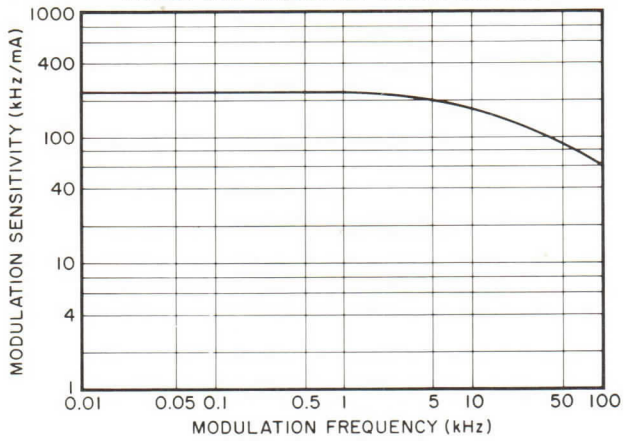

OUTPUT CHARACTERISTICS

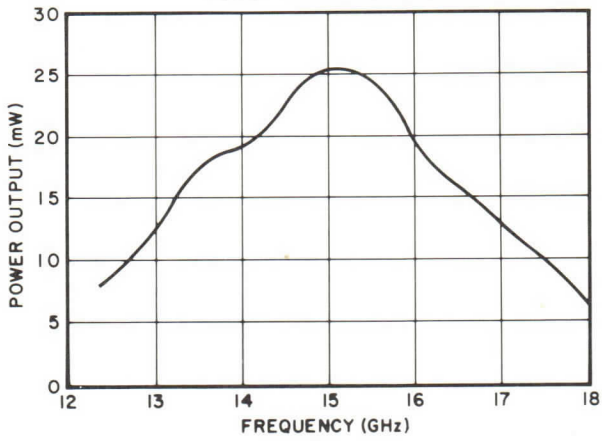

NOTES:

1. General characteristics and characteristic curves are based on performance tests. These figures may change without notice as a result of additional data or product refinement. The Varian Solid State West Division should be consulted before using this information for final equipment design.

2. Each model can be energized and will sustain oscillation at any frequency range within its tunable range of 12.3 to 18.1 GHz, depending upon the model selected. Diode voltage should be applied before applying power to the magnetic tuning coil.

3. Measured with the oscillator operating into a load producing a VSWR of 1.1:1 or less.

4. Diode-supply voltage regulation should be 0.01 percent with a ripple of no more than 1 millivolt. The maximum diode voltage specified on the Test Performance Sheet supplied with each unit should never be exceeded. The current-regulated magnetic tuning-coil supply should be well regulated with ripple minimized to inhibit FM from power-supply fluctuations. Tuning-coil current and voltage are for oscillation at the upper frequency limit.

5. Maximum permissible value for specified power output.

6. For optimum performance, each oscillator should be either bolted securely to a large heat sink or provided with an auxiliary air flow directed through an optional finned heat sink adequate to keep the heat-sink temperature within the specified operating range.

OUTLINE DRAWING

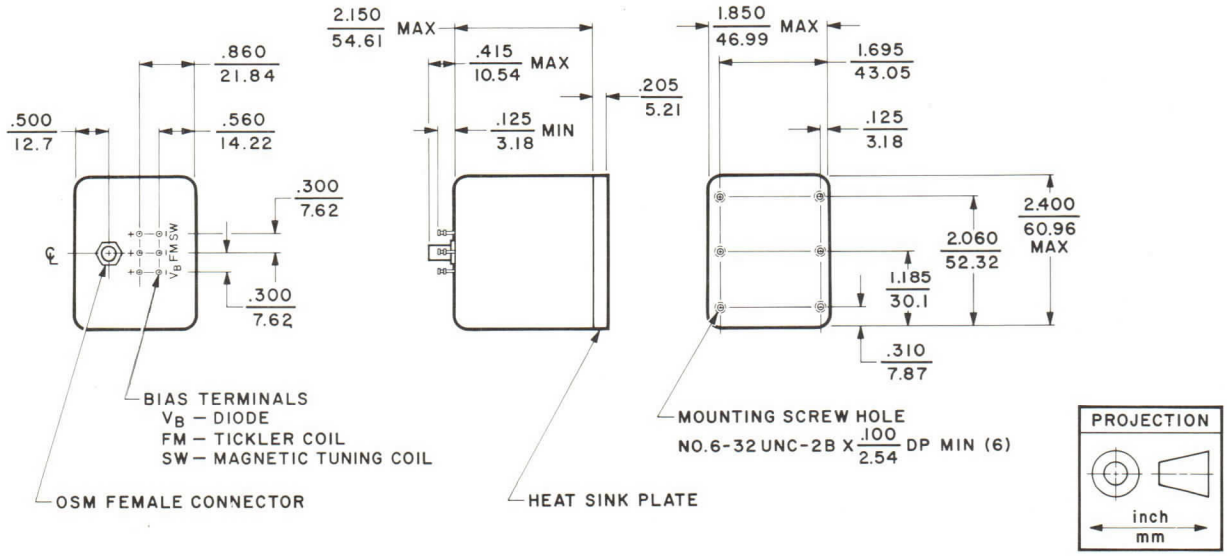

varian
solid state west division

TECHNICAL DATA

9080
Series

COMMERCIAL
YIG-TUNED GUNN-EFFECT
OSCILLATORS

10-100 mW 7-40 GHz

FEATURES

- Broad frequency coverage — 7 to 40 GHz
- Output powers to 100 mW
- Tuning ranges up to 10 GHz
- Low second harmonic
- Extremely low magnetic susceptibility
- No heaters
- Modulation coils on all units
- Convenient mechanical configuration

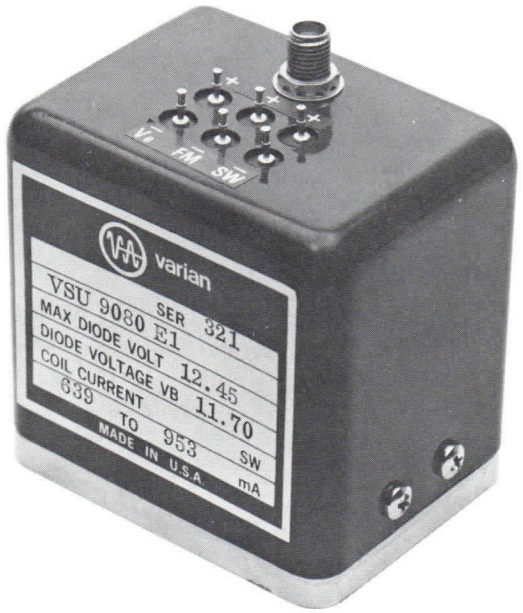

OPTIONS

- Coil drivers available for all units
- "Faster" modulation coils
- Improved linearity
- Improved hysteresis

DESCRIPTION

The Varian 9080 series is an extensive line of YIG-tuned Gunn-effect oscillators whose unique combinations of features make them particularly well suited to use in commercial or laboratory test facilities. Units are available from 7 to 40 gigahertz with standard units providing tuning ranges up to 10 gigahertz. Unique rf circuits allow a wide choice of outputs ranging from 10 to 100 milliwatts while spurious and harmonic signals are kept low. Power consumption is minimized since no YIG heaters are used. An integral mu-metal magnetic shield makes each oscillator virtually unaffected by external magnetic fields, thus eliminating FM noise which could be induced by magnetic fields from adjacent equipment components. User convenience is further enhanced because all units are provided with separate dc-isolated modulation coils. Mechanical mounting is made easy since all electrical connectors are on one side. Each unit is conduction cooled through its mounting surface.

3310 11/75

Printed in U.S.A.

GENERAL CHARACTERISTICS[1]

OUTPUT

Frequency Coverage ..... 7 to 40 GHz
Power Output[2] ..... 10 to 100 mW
Power Variation,
  Maximum ..... 6 dB
  Typical ..... 4 dB
2nd Harmonic,
  below carrier, minimum ..... 30 dB
Non-harmonic spurious,
  below carrier, minimum ..... 60 dB
Pushing Figure, maximum ..... 12 MHz/V
Magnetic Susceptibility, typical[3] .. 100 kHz/G

PHYSICAL

Dimensions ..... See Outline Drawing
Weight, maximum ..... 1.75 lb/795 g
Mounting Position ..... Any
Cooling ..... Conduction
R-F and D-C Connections... See Outline Drawing

TUNING

Tuning ..... Magnetic Main Coil and Modulation Coil
Main Coil
  Tuning Sensitivity, nominal[4] .. 22 MHz/mA
  Tuning Range, maximum ..... 10 GHz
  Sweep Rate, nominal ..... 100 Hz
  Linearity, typical[5] ..... ±0.15 %
  Coil Inductance, typical ..... 100 mH
  Coil Resistance, typical ..... 10 Ω
  Hysteresis, typical[5] ..... 15 MHz
Modulation Coil ("Tickler Coil")
  Modulation Sensitivity
    Typical ..... 150 kHz/mA
    Minimum ..... 200 kHz/mA
  Modulation Deviation ..... ±100 MHz/min
  Modulation Rate[6] ..... See Modulation Curve

ENVIRONMENTAL

Temperature Range, operating
  Heat Sink ..... 20 to 70 °C
Storage ..... -54 to +85 °C

OPERATING CHARACTERISTICS[1]

Frequency Tuning Range (GHz)[7]	Minimum Output (mW)[8]	Maximum Power Variation (dB)	Gunn Bias Voltage		Gunn Bias Current				Pulling at 1.5:1 VSWR (MHz)	Maximum Tuning Current (mA)	Maximum Linearity (±%)	Maximum Hysteresis (MHz)	Type Number w/o Driver
					Threshold[9]		Operating						
			Typ. (V)	Max. (V)	Typ. (mA)	Max. (mA)	Typ. (mA)	Max. (mA)					
7.0-11.0	10	6	14	18	650	850	400	700	15	550	0.3	25	VSH-9080A1
	20	6	14	18	650	850	400	700	15	550	0.3	25	VSH-9080C1
8.0-12.4	10	6	13	17	600	900	475	750	15	600	0.3	25	VSX-9080A1
	20	6	13	17	600	900	475	750	15	600	0.3	25	VSX-9080C1
	30	6	13	17	600	900	475	750	15	600	0.3	25	VSX-9080D1
	50	6	13.0±1.5	17	1200	1800	950	1500	15	600	0.3	25	VSX-9080E1
	60	6	13.0±1.5	17	1200	1800	950	1500	15	600	0.3	25	VSX 9080E2
8.0-18.0	10	6	13±2	17	1200	1800	1000	1500	15	875	0.3	25	VSZ-9080A1
	20	6	13±2	17	1200	1800	1000	1500	15	875	0.3	25	VSZ-9080C1
8.5-9.6	10	6	14	17	600	900	475	750	15	500	0.3	25	VSX-9080A2
	20	6	14	17	600	900	475	750	15	500	0.3	25	VSX-9080C2
	30	6	14	17	600	900	475	750	15	500	0.3	25	VSX-9080D2
	50	6	14	17	1200	1800	950	1500	15	500	0.3	25	VSX-9080E3
	75	6	14±1	17	1200	1800	950	1500	15	500	0.3	25	VSX-9080F1
	100	6	14±1	17	1200	1800	950	1500	15	500	0.3	25	VSX-9080G1
9.0-18.0	10	6	12±2	17	1200	1800	1000	1500	15	875	0.3	25	VSZ-9080A2
	20	6	12±2	17	1200	1800	1000	1500	15	875	0.3	25	VSZ-9080C2
	30	6	12±2	17	1200	1800	1000	1500	15	875	0.3	25	VSZ-9080D2
10.0-15.0	10	6	12	16	650	900	500	750	15	725	0.3	25	VSM-9080A1
	20	6	12	16	650	900	500	750	15	725	0.3	25	VSM-9080C1
	50	6	12.0±1.5	16	1300	1800	1000	1500	15	725	0.3	25	VSM-9080E1
10.0-20.0	10	6	12.0±1.5	16	1200	1800	1000	1500	15	975	0.3	25	VSZ-9080A3
12.4-18.0	10	6	11	15	650	900	500	750	15	875	0.3	25	VSU-9080A1
	20	6	11	15	650	900	500	750	15	875	0.3	25	VSU-9080C1
	30	6	11.0±1.5	15	1200	1500	900	1200	15	875	0.3	25	VSU-9080D1
	50	6	11.0±1.5	15	1300	1800	1000	1500	15	875	0.3	25	VSU-9080E1
15.0-22.0	10	6	10	15	650	900	500	750	15	1075	0.3	25	VSN-9080A1
	20	6	10	15	650	900	500	750	15	1075	0.3	25	VSN-9080C1
	30	6	10.0±1.5	15	1200	1500	900	1200	15	1075	0.3	25	VSN-9080D1
	50	6	10.0±1.5	15	1300	1800	1000	1500	15	1075	0.3	25	VSN-9080E1
18.0-26.5	10	6	8-10	12	1200	1300	900	1100	20	1100	0.2	20	VSK-9080A2[10]
26.5-40.0	5	6	5-9	10	1200	1300	900	1100	20	1300	0.2	130	VSA-9080A2[10]

CHARACTERISTIC CURVES
Typical performance values

TICKLER-COIL MODULATION CHARACTERISTICS

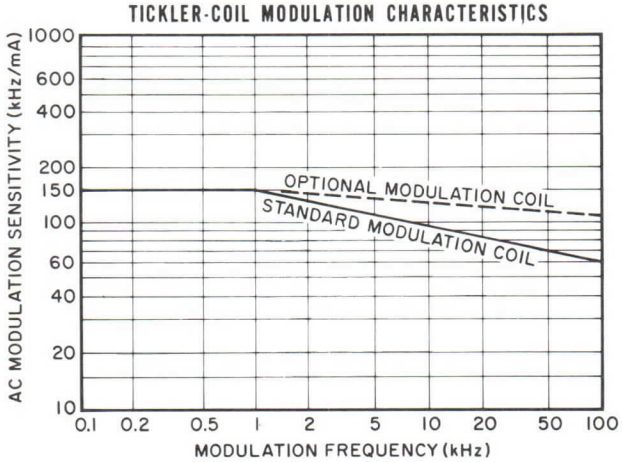

LINEARITY CHARACTERISTICS

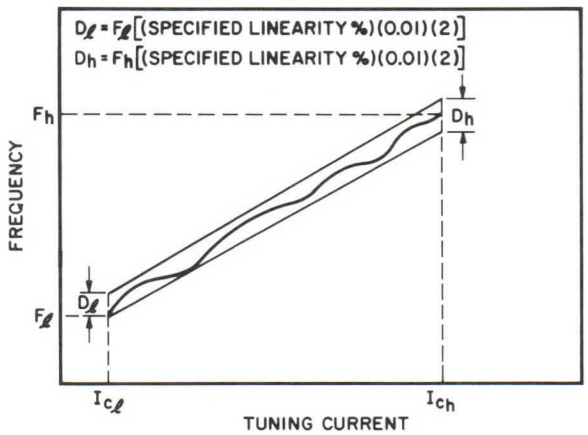

THRESHOLD CURRENT CHARACTERISTICS

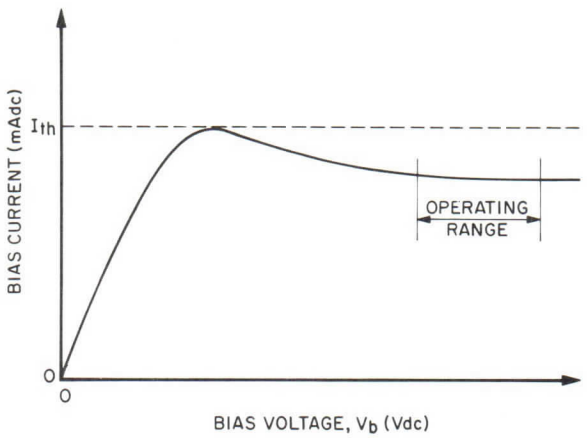

NOTES;

1. Characteristics and operating values are based on performance tests. These values may change without notice as a result of additional data or product refinement. The Varian Solid State West Division should be consulted before using this information for final equipment design.
2. Please consult factory for special output power requirements.
3. Applies below 10 gauss level.
4. Other tuning sensitivities are available on request.
5. For more stringent application, improved linearity and hysteresis are available on request.
6. An optional FM coil with a minimum 3-dB bandwidth of 200 kHz is available on request.
7. Other tuning ranges, as well as higher and lower frequencies are available on request.
8. Units with power below 50 mW and standard waveguide bandwidths do not require bias programming. The bias program is linear with frequency and the limits appear on the name plate of the oscillator.
9. Threshold current is required for proper oscillator turn-on. However, the current is required only for a moment and occurs at a voltage of about 1/3 the normal operating value.
10. These are preliminary characteristics. The general characteristics do not necessarily apply. Please consult the Varian Solid State West Division for complete data.

OUTLINE DRAWING

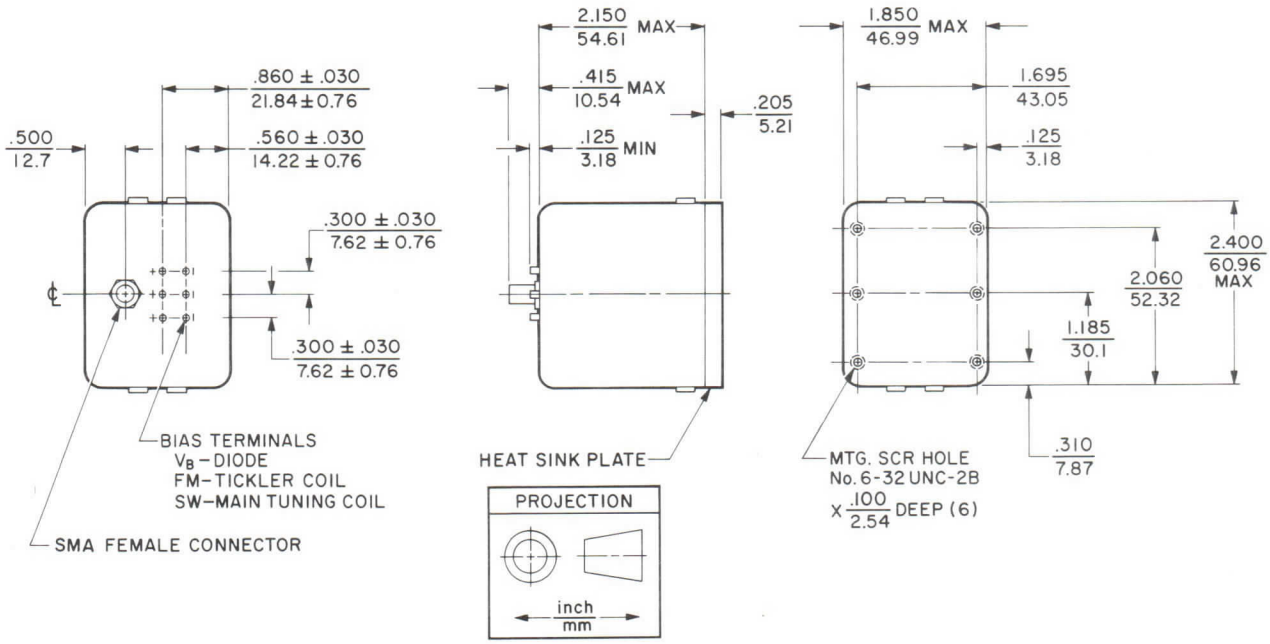

varian

PRELIMINARY
TECHNICAL DATA

9681
Series
FAST SWITCHING
MULTICHANNEL
STALO SOURCES
L-Ku Band

DESCRIPTION

Varian 9681 sources are multi-frequency, crystal-referenced, microwave stable local oscillators with instantaneous frequency coverage of up to 20%. Each can provide a number of output frequencies which can be selected at random. Switching speeds for these fast-switching units are typically less than 1 microsecond. Programing of the source frequencies can be accomplished by a binary, TTL-compatible code. An auxiliary input allows the source to be driven from an external synthesizer. An optional VCO mode provides full band coverage at very high tuning rates. 9681 sources are engineered to meet all pertinent environmental and military requirements.

GENERAL CHARACTERISTICS [1]

ELECTRICAL

Frequency of Coverage[2]	L to Ku Band
Number of Channels, [2]	
In any 20% Bandwidth	7
Output Power, min	
L Band	1 W
S Band	250 mW
C Band	100 mW
X Band	50 mW
Ku Band, (under development)	10 mW
Frequency Stability[3]	<±0.005 %
Spurious Output[4]	>70 dBc
Switching Speed	
Off-On, max	1 μs
On-Off, max	10 μs
AM Noise, 1-kHz Bandwidth	-115 to -125 dBc

PHYSICAL

Dimensions	See Outline Drawing
Weight, approximate	4.5 lb/2 kg
Connectors	
RF Output	Type SMA
DC Input/Control	15-pin Cannon
Power Supply Requirements	
Voltage[5]	24-28 Vdc
Current, max	0.75 Adc

ENVIRONMENTAL

Temperature	
Operating	-30 to +75 °C
Storage	-50 to +80 °C
Relative Humidity, at 40°C	95 %
Shock, non-operating	25 G

CHARACTERISTIC CURVES [1]
Typical performance values

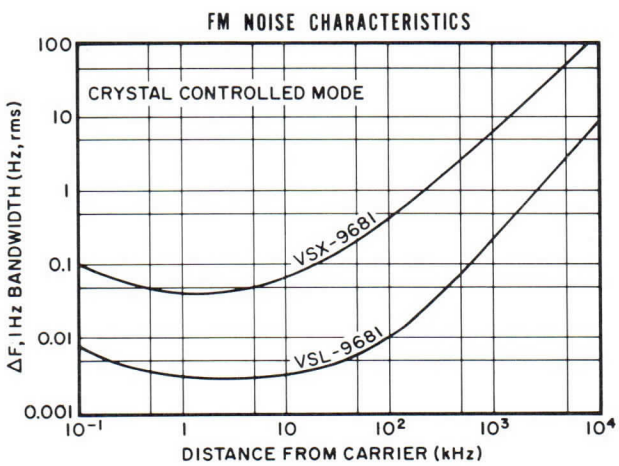

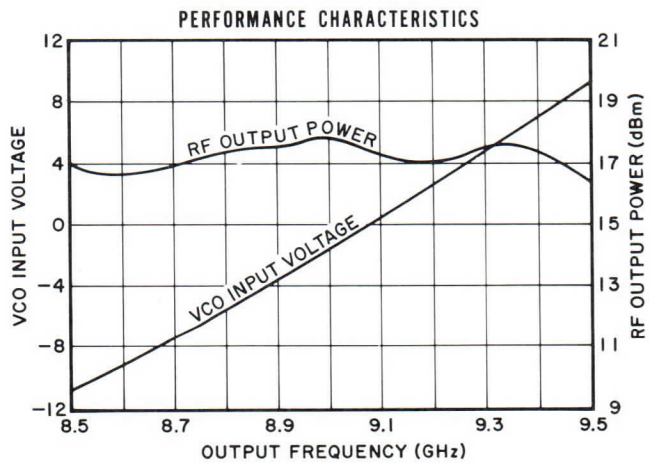

3576 3/77

Printed in U.S.A.

NOTES:

1. Characteristic values and curves are based on performance tests. These figures may change without notice as a result of additional data or product refinement. Consult the Varian Beverly Division before using this information for final equipment design.
2. When ordering, specify the frequencies and number of channels desired. As an option, up to 12 channels can be furnished in any 20% bandwidth.
3. Including temperature variations.
4. As an option, these sources can be furnished with greater spurious output suppression.
5. Other voltages are available on request.

OUTLINE DRAWING

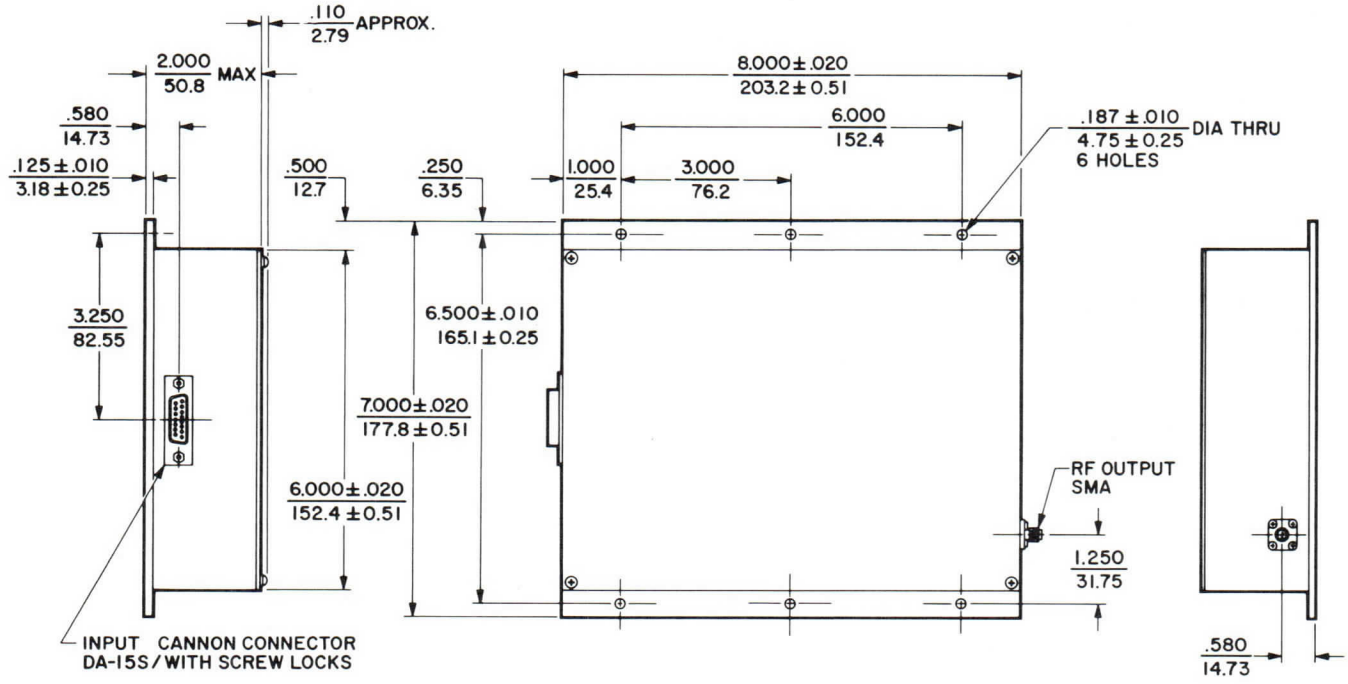

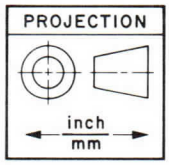

varian

PRELIMINARY
TECHNICAL DATA

9690
Series

CRYSTAL-CONTROLLED
MM-WAVE SOURCES
15-40 GHz

DESCRIPTION

Varian 9690 Series sources are single-frequency, crystal-referenced microwave devices. These sources are intended primarily for use as highly stable L. O. signal sources or transmitter drivers.

GENERAL CHARACTERISTICS [1]

ELECTRICAL

Frequency Coverage, typical [2]	15 to 40 GHz
Output Power, minimum	10 mW
Frequency Stability	±0.005 %
Spurious Output	>60 dBc
AM Noise, in any 1 kHz bandwidth	<-115 dBc
FM Noise, at 10 kHz in 1 Hz bandwidth	<0.2 Hz rms
DC Input Supply Voltage [3]	24 to 28 Vdc
Current, max	750 mAdc

PHYSICAL

Dimensions	See Outline Drawing
Weight, approximate	3 lb/1.36 kg
Connectors	
RF Output, depending on operating frequency	Mates with UG-541/U, UG-595/U, or UG-599/U Flange
DC Input	DA-15P

ENVIRONMENTAL

Temperature Range	
Operating	-30 to +75 °C
Storage	-50 to +75 °C
Relative Humidity, at 40°C	95 %
Shock, non-operating	50 G

NOTES:

1. Characteristic values are based on performance tests. These figures may change without notice as a result of additional data or product refinement. Consult the Varian Beverly Division before using this information for final equipment design.
2. When ordering, specify the frequency desired. The source will be equipped with the appropriate r-f output flange to match the frequency desired.
3. Units can be furnished to operate with other input voltages.

3577 3/77

Printed in U.S.A.

OUTLINE DRAWING

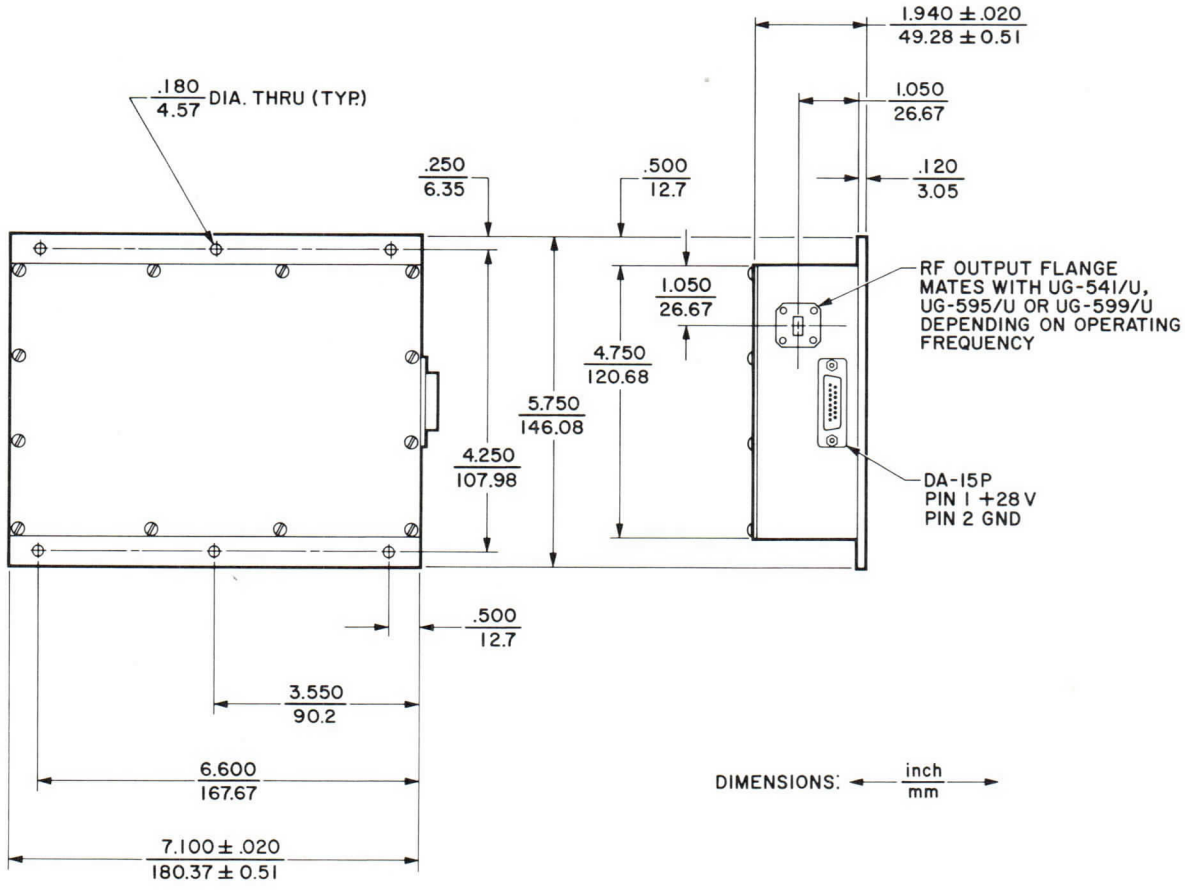

varian

PRELIMINARY
TECHNICAL DATA

9691
Series
SWITCHING
MULTICHANNEL
STALO SOURCES
L-Ku Band

DESCRIPTION

Varian 9691 sources are multi-frequency crystal-referenced, microwave stable local oscillators with instantaneous frequency coverage of up to 20 percent. Each can provide a number of output frequencies which can be selected at random. Switching speeds are typically less than 1 millisecond. Programing of the source frequencies can be accomplished by a binary, TTL-compatible code. An auxiliary input allows the source to be driven from an external synthesizer. An optional VCO mode provides full band coverage at high tuning rates. 9691 sources are engineered to meet all pertinent environmental and military requirements.

GENERAL CHARACTERISTICS[1]

ELECTRICAL

Frequency Coverage[2] ..... L to Ku Band
Number of Channels, max[2,3]
  Up to 20% Bandwidth 14
Output Power, typ
  L Band, VSL-9691 ..... 1 W
  S Band, VSS-9691 ..... 250 mW
  C Band, VSC-9691 ..... 100 mW
  X Band, VSX-9691 ..... 50 mW
  VSU-9691, under development ... 10 mW
Frequency Stability[4] ..... <±0.005 %
Spurious Output[5] ..... >70 dBc
Switching Speed
  Maximum ..... 1 ms
  Typical ..... 250 μs
AM Noise,
  1 kHz bandwidth ..... 115 to 125 dBc

PHYSICAL

Dimensions ..... See Outline Drawing
Weight, approximate ..... 4.5 lb/2 kg
Connectors
  RF Output ..... Type SMA
  DC Input/Control ..... 15-pin Cannon
Power Supply Requirements
  Voltage[6] ..... 20-28 Vdc
  Current, max ..... 0.5 Adc

ENVIRONMENTAL

Temperature
  Operating ..... -30 to +75 °C
  Storage ..... -50 to +80 °C
Relative Humidity, at 40° C ..... 95 %
Shock, non-operating ..... 25 G

CHARACTERISTIC CURVES
Typical performance values

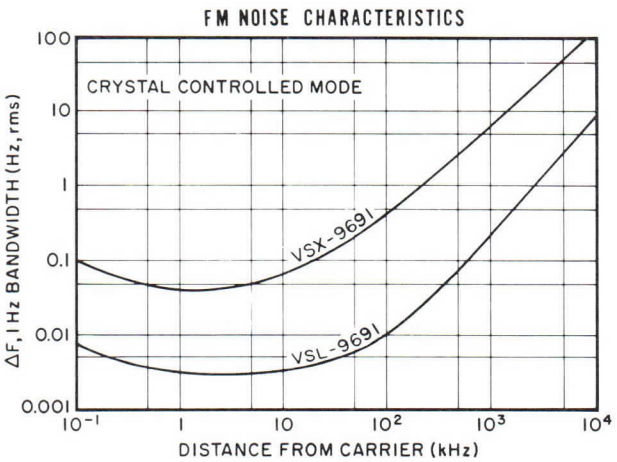

NOTES:

1. Characteristic values are based on performance tests. These figures may change without notice as a result of additional data or product refinement. Consult the Varian Beverly Division before using this information for final equipment design.
2. When ordering, specify the frequencies and number of channels desired. More channels than indicated (up to 28) can be furnished on special request.
3. A VCO channel can be furnished as an option.
4. Including temperature variations.
5. As an option, these sources can be furnished with spurious output suppressed at least 80 dB below the carrier.
6. Other voltages are available on request.

3645 4/77

Printed in U.S.A.

OUTLINE DRAWING

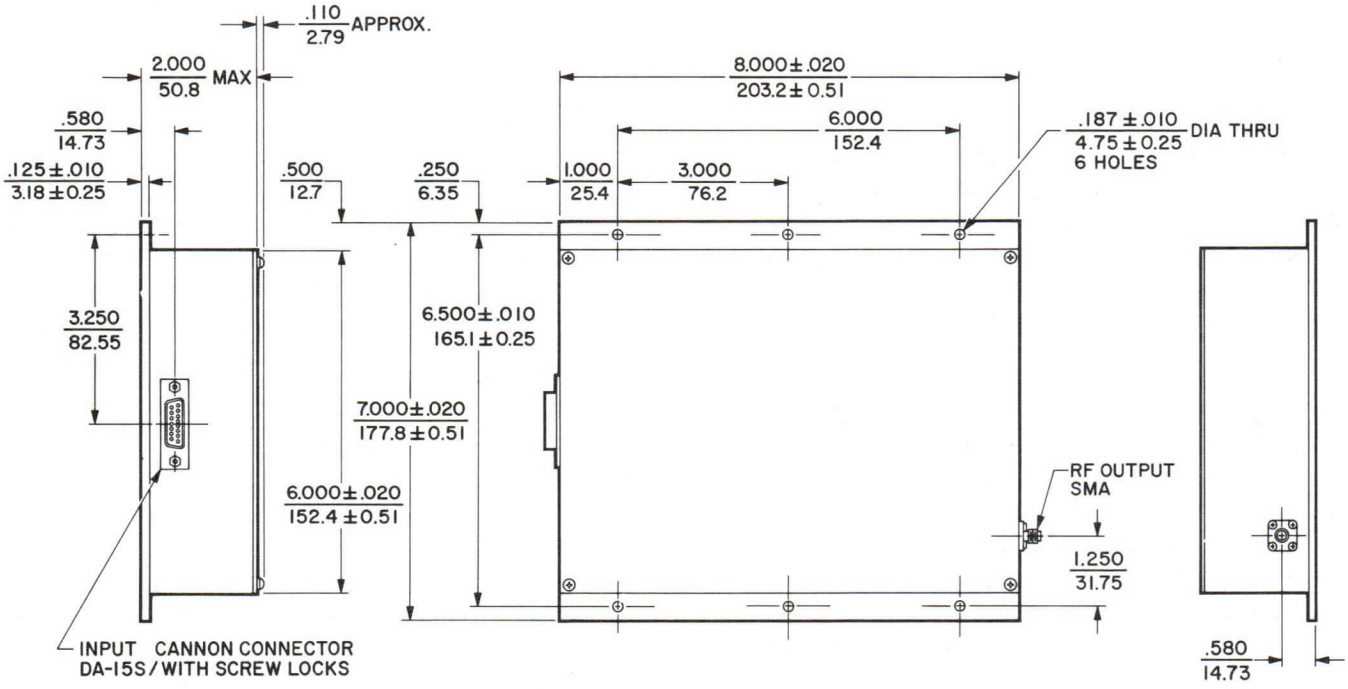

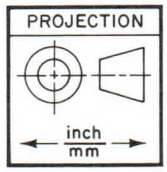

varian

PRELIMINARY
TECHNICAL DATA

9692
Series
CRYSTAL-CONTROLLED
MM-WAVE SOURCES
16-36 GHz

DESCRIPTION

Varian 9692 sources are dual-frequency, crystal-referenced microwave signal sources. They are for use primarily as highly stable L.O. signal sources or transmitter drivers. Each consists of an X-band driver, a frequency doubler, and a frequency tripler to provide two output signals, one in K band, the other in Ka band. The doubler and tripler units may be mounted separately and connected to the common X-band driver by semi-ridged coaxial cables of up to 3 feet in length.

X-Band Driver

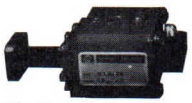
K-Band Doubler

Ka-Band Tripler

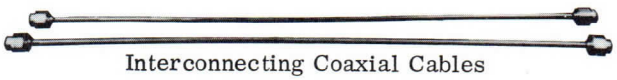
Interconnecting Coaxial Cables

GENERAL CHARACTERISTICS [1]

ELECTRICAL

Frequency Coverage [2]	16-36 GHz
Doubler Output Frequency	16-24 GHz
Tripler Output Frequency	24-36 GHz
Output Power, each output, minimum	10 mW
Frequency Stability	±0.005 %
Spurious Output	>60 dBc
AM Noise, in any 1 kHz bandwidth	>110 dBc
FM Noise, at 10 kHz in 1 Hz bandwidth	<0.2 Hz rms

PHYSICAL

Dimensions	See Outline Drawings
Weight, approximate	
Driver Unit	3 lb/1.36 kg
Multipliers, each	1 lb/0.454 kg
Connectors	See Outline Drawings

ENVIRONMENTAL

Temperature Range	
Operating	-30 +75 °C
Storage	-50 +75 °C
Relative Humidity, at 40°C	95 %
Shock, non-operating	50 G

NOTES:

1. Characteristic values are based on performance tests. These figures may change without notice as a result of additional data or product refinement. The Varian Beverly Division should be consulted before using this information for final equipment design.
2. When ordering, specify the driver frequency desired. The source will be equipped with the appropriate r-f output flanges to match the frequencies selected.

3578 3/77

Printed in U.S.A.

OUTLINE DRAWINGS
Typical dimensions

X-BAND DRIVER

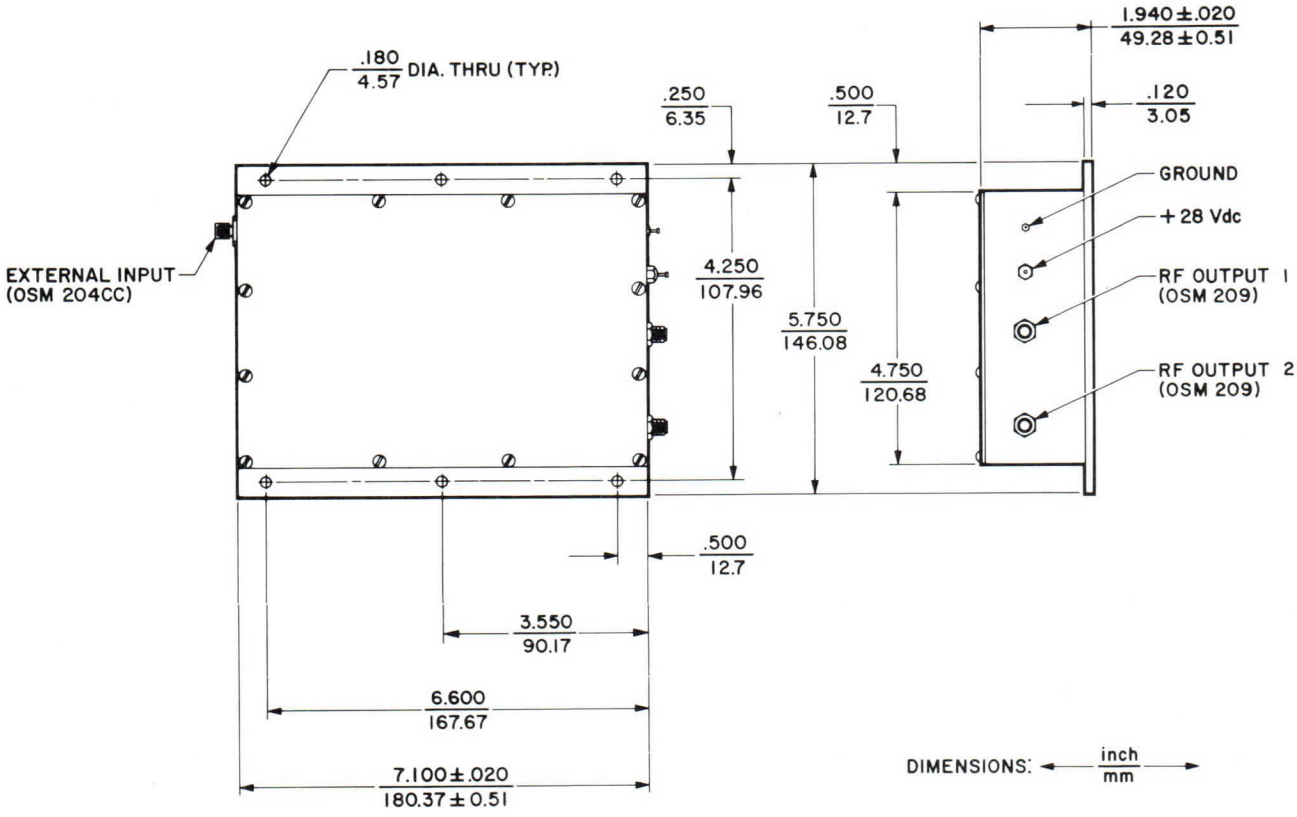

K-BAND DOUBLER

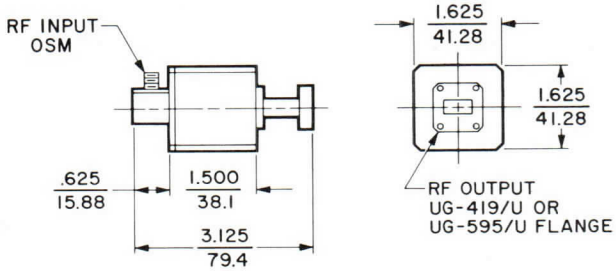

Ka-BAND TRIPLER

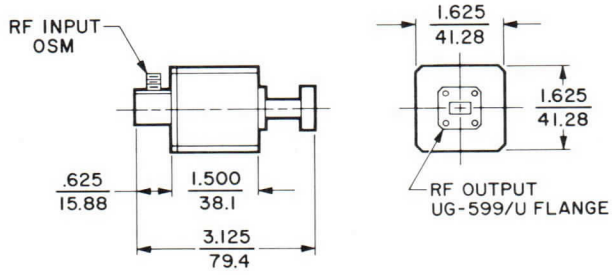

SWITCHES

thermal

vacuum

varian beverly

TECHNICAL DATA

BL-805

THERMAL FUSE SWITCH

DESCRIPTION

The Varian BL-805 is a one shot thermal fuse switch that provides a unique demonstrated reliability factor of 0.999630. This miniature device has two pairs of contacts, one normally open, and one normally closed, and operates on an electrically actuated fuse wire burnout principle. The BL-805 is capable of withstanding extreme shock and temperature environments.

Illustration actual size

FEATURES

- Reliability*
- Lightweight
- Miniaturized
- Ruggedized
- Five-year shelf life

* Reliability of 0.999630 based on production of more than 100,000 units.

TYPICAL CHARACTERISTICS

ELECTRICAL

Contact Ratings	30	Vdc, 5A Resistive Load/5 min.
Contact Resistance	0.016	ohms
Bridge Wire Resistance	2.00	ohms
High Pot	500	V
Non-Firing†	400	mA/5 min.
All-Fire, minimum†	2.0	A
Firing Time, maximum	33	ms
Firing Energy	1.6 x 10^6	ergs

MECHANICAL

Dimensions	See Outline Drawings
Weight, approximate	6 grams
Mounting Position	Any
Connectors	See Pin Connections

† Units are also available in 1 ampere-1 watt, no-fire; 5 amperes, all-fire.

ENVIRONMENTAL

Vibration

10-128 cps	0.036	inch (Double amplitude)
128-2000 cps	30	G
Storage	5	years
Linear Acceleration, 60 sec	700	G
Operating Temperature	–80 to 260	°F

Mechanical Shock

Pre-Fire	2000 G, 2 ms pulse duration
Post-Fire	1000 G, 2 ms pulse duration

Storage

300°F for 14 Months	No Failures
500°F to 800°F for 10 Months	No Failures
–65°F to 260°F for 5 Years	No Failures

Pub. B1185 2/64

Printed in U.S.A.

Firing Time

Actuation Volts (dc)	Transfer Time Milliseconds	Total Time Milliseconds
28	0.4	1
10	0.7	3
4	1.0	20

Contact Overloads

Normally Closed Contacts Amperes	Normally Open Contacts Amperes	Time Seconds
15	25	Continuous
50	100	0.5

Overtemperatures

Actuation ..... −314°F to +880°F

Overmechanical

Shock ..... 5000 G
Vibration ..... 100 G
Linear Acceleration ..... 1000 G

OUTLINE DRAWING

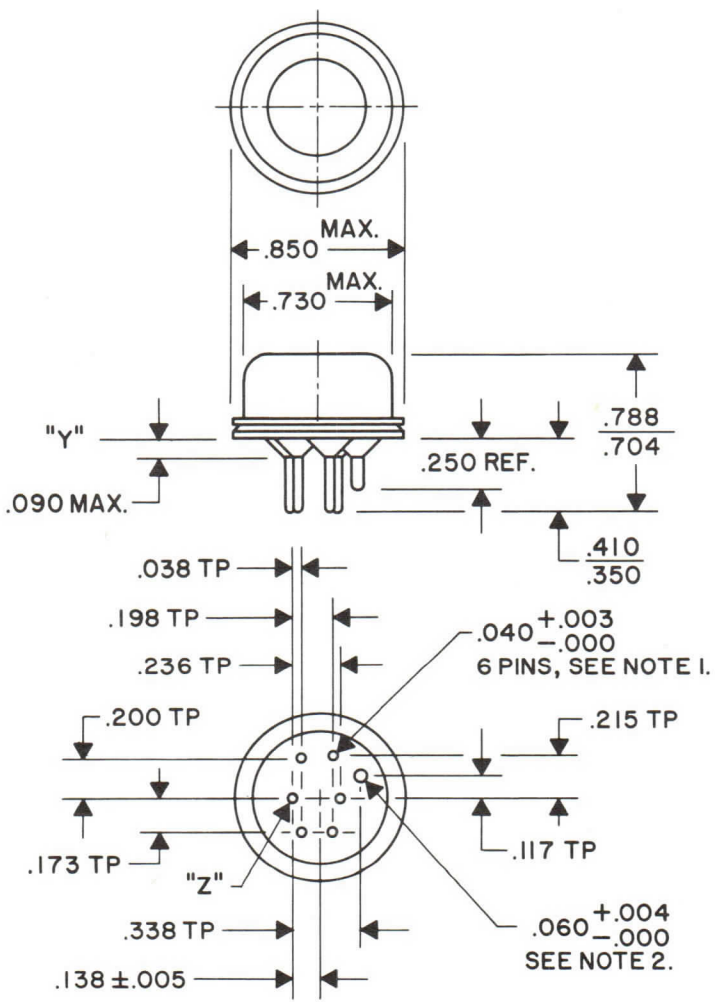

NOTE I: POSN. TOL. .014 DIA. (MMC) 6 PLACES DATUM "Z". SQ. TOL. .014 DIA. (MMC) 6 PLACES DATUM "Y".

NOTE 2: POSN. TOL. .014 DIA. (MMC) DATUM "Z". SQ. TOL. .014 DIA. (MMC) DATUM "Y".

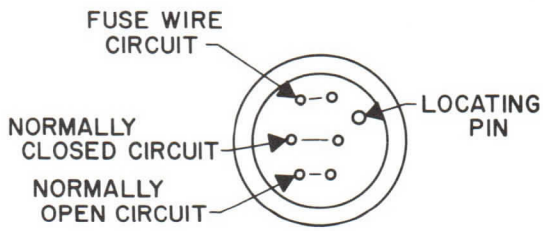

PIN CONNECTIONS
(BOTTOM VIEW)

TRANSMISSION LINE COMPONENTS

mixers/modulators

hybrids

power dividers/combiners

directional couplers

monopulse comparators

varian
palo alto tube division

TECHNICAL DATA

H62DA2

HIGH POWER CIRCULATOR

15.5-17.5 GHz
2 kW

DESCRIPTION

The H62DA2 is an air-cooled, four-port, differential-phase-shift circulator for use as a duplexer or isolator in the frequency range of 15.5 to 17.5 gigahertz. As a duplexer with a load at Port 4, isolation between the transmitter and antenna ports is greater than 20 dB; insertion loss is less than 0.4 dB. With loads at Ports 3 and 4, this circulator can be used as a high-power isolator with the same electrical performance. This unit is ideal for use with a TWT interstage or output amplifier. Type and orientation of waveguide ports can be modified to meet special customer requirements.

GENERAL CHARACTERISTICS[1]

ELECTRICAL

Frequency Range	15.5 to 17.5 GHz
Power Handling Capacity	2 kW
Isolation, min	20 dB
Insertion Loss, max	0.4 dB
Load VSWR, max	2:1
Input VSWR, max	1.2:1

PHYSICAL

Dimensions	See Outline Drawing
Weight	4.5 lb
Cooling[2]	Convection or Forced Air
Ambient Air Temperature, max	40 °C
Waveguide Pressurization, max[3]	20 lbf/in²g
RF Flanges	See Outline Drawing
Standard Finish[4]	Red Copon Epoxy
Material	Copper Alloy

OUTLINE DRAWING

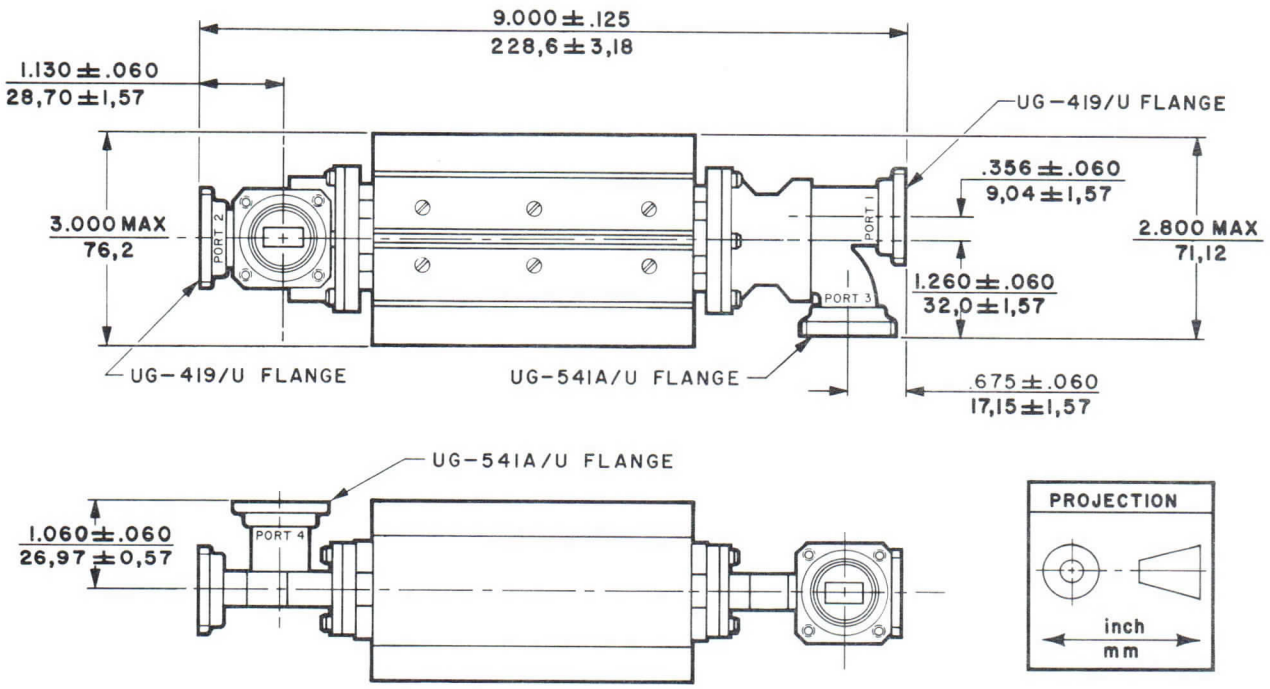

2306 4/70

Printed in U.S.A.

NOTES:

1. Characteristic values are based on performance tests. These figures may change without notice as the result of additional data or product refinement. Contact Varian Palo Alto Tube Division before using this information for equipment design.
2. For ambient air temperatures above 40 °C, forced-air cooling must be provided.
3. Although waveguide pressurization above normal atmospheric pressure is not required, this device may be pressurized to a gauge pressure of 20 pound-force per square inch.
4. Other finishes are available.

varian

TECHNICAL DATA

H62DA9

HIGH POWER CIRCULATOR

13.9-14.5 GHz
2 kW

DESCRIPTION

The H62DA9 is an air-cooled, four-port differential-phase-shift circulator for use as a duplexer or isolator in the frequency range of 13.9 to 14.5 gigahertz. As a duplexer with a load at port 4, isolation between the transmitter and antenna ports is greater than 20 dB; insertion loss is less than 0.4 dB. With loads at ports 3 and 4, this circulator can be used as a high power isolator with the same electrical performance. Type and orientation of waveguide ports can be modified to meet special customer requirements.

GENERAL CHARACTERISTICS [1]

ELECTRICAL

Frequency Range	13.9 to 14.5 GHz
CW Power Handling, max	2.5 kW
Isolation[2], min	20 dB
Insertion Loss, max	0.4 dB
Load VSWR, max	2.5:1
Input VSWR, max	1.15:1

PHYSICAL

Dimensions	See Outline Drawing
Weight, approx	3.5 lb/1.6 kg
Cooling[3]	Convection or Forced Air
Ambient Air Temperature	-10 to 55 °C
Pressurization Capability	20 lbf/in²g (1.4 kgf/cm²g)
Altitude	8000 ft/2.4 km
RF Flanges	See Outline Drawing
Material	Aluminum

OUTLINE DRAWING

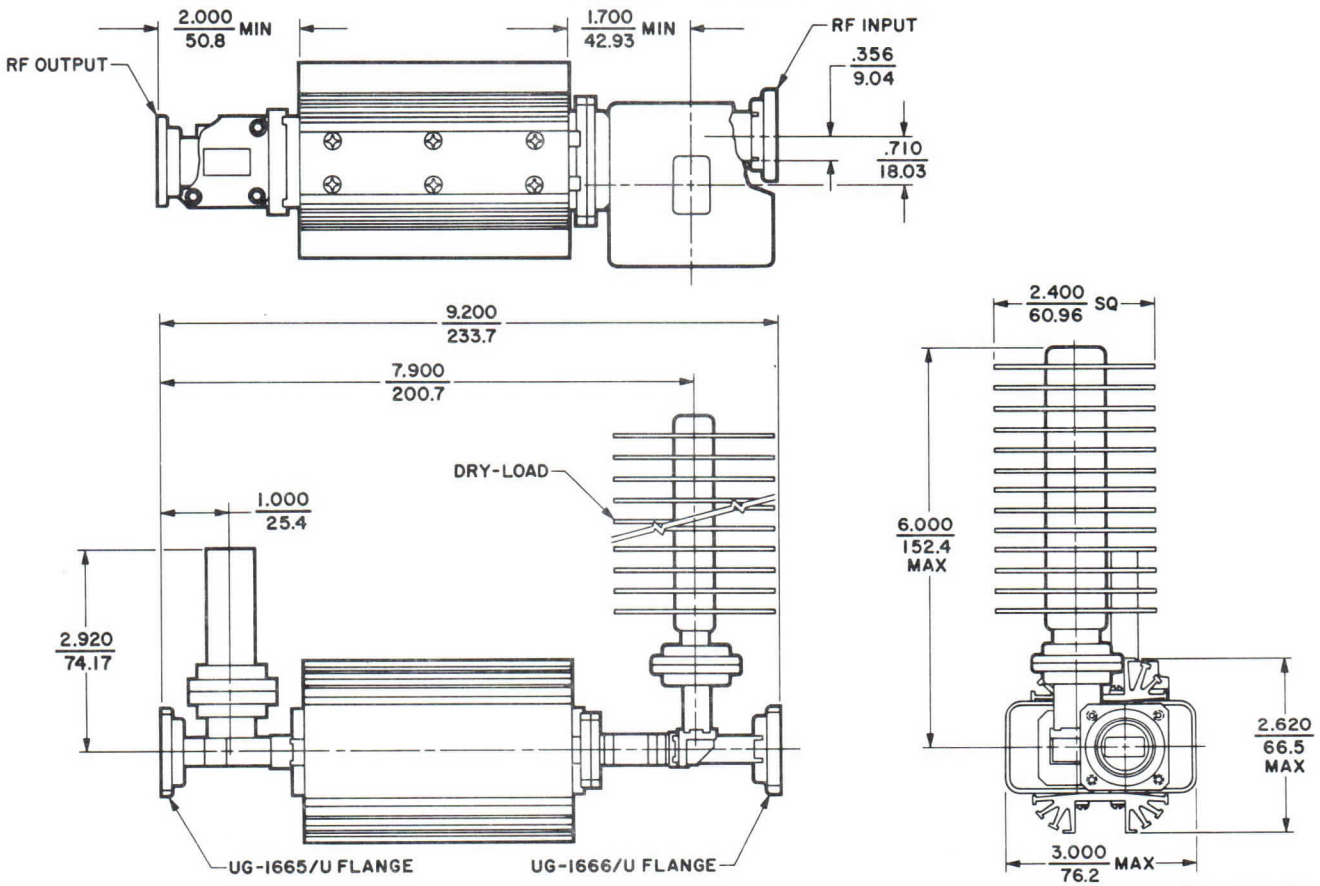

3558 1/77

Printed in U.S.A.

NOTES:

1. Characteristic values are based on performance tests. These figures may change without notice as the result of additional data or product refinement. Contact the Varian Palo Alto Microwave Tube Division, Microwave Components Operation before using this information for equipment design.

2. Isolation value is between ports 2 and 1 (and between ports 3 and 2 when used as a duplexer).

3. For power levels above 1 kW and ambient air temperatures above 40° C, forced-air cooling must be provided. A free flow delivery of approximately 30 ft^3/min(14 l/s) should be adequate.

varian

TECHNICAL DATA

H90DA1

HIGH POWER CIRCULATOR

8.2-10.2 GHz
2 kW average
10 kW peak

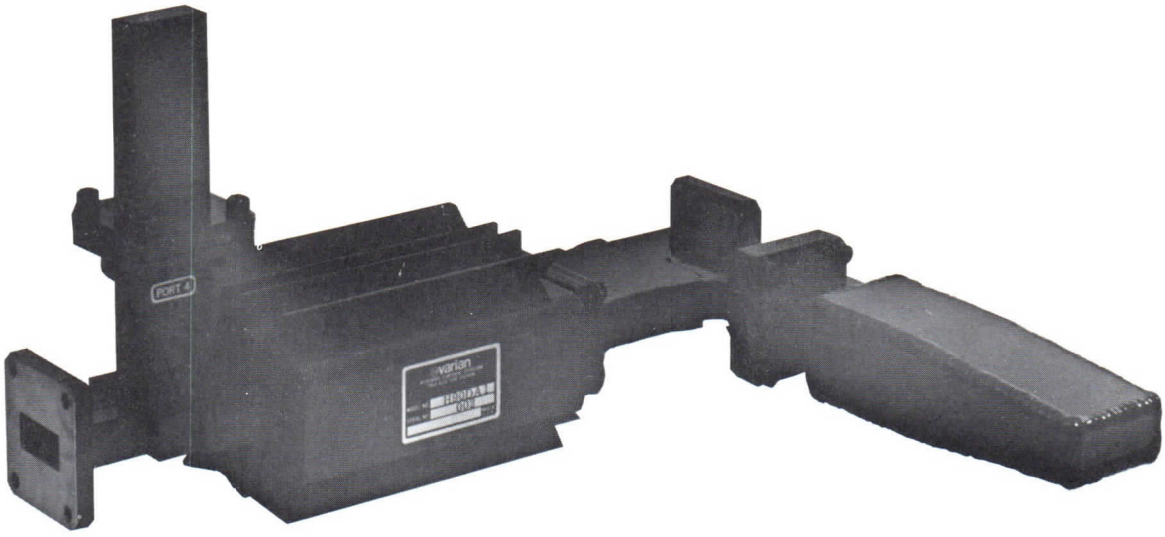

DESCRIPTION

The H90DA1 is a four-port, differential-phase-shift circulator for use as a duplexer or isolator in the frequency range from 8.2 to 10.2 gigahertz. As a duplexer, with a load at port 4, isolation between the transmitter and antenna ports is greater than 20 dB; insertion loss is less than 0.3 dB. With loads at ports 3 and 4, this circulator can be used as a high-power isolator with the same electrical performance. Greater isolation can be attained over limited frequency ranges. The H90DA1 can handle up to 2 kilowatts of average power and up to 10 kilowatts of peak power with a load VSWR of 2:1. For higher load mismatches, the transmitted power should be reduced. The sum of transmitted and reflected power should never exceed an average power of 2.25 kilowatts. This device requires only natural air convection for cooling. Designation and orientation of waveguide ports can be modified to meet special customer requirements.

GENERAL CHARACTERISTICS[1]

ELECTRICAL

Frequency Range	8.2 to 10.2 GHz
Power Handling Capacity	
Average	2 kW
Peak	10 kW
Isolation, min	20 dB
Insertion Loss, max	0.3 dB
Load VSWR, max	2:1
Input VSWR, max	1.2:1

PHYSICAL

Dimensions	See Outline Drawing
Weight	5 lb/2.3 kg
Mounting Position	Any
Cooling	Natural Air Convection
Waveguide Pressurization[2]	35 lbf/in^{2}g (2.45 kgf/cm^{2}g)
RF Flanges	See Outline Drawing
Material[3]	Copper Alloy

3594 1/77

Printed in U.S.A.

NOTES:

1. Characteristics are based on performance tests. These values may change without notice as a result of additional data or product refinement. Contact your local Varian Sales Office or the Palo Alto Microwave Tube Division, Microwave Components Operation before using this information for equipment design.
2. Although waveguide pressurization above normal atmospheric pressure is not required, the unit may be subjected to gauge pressure up to 35 lbf/in^2(2.45 kgf/cm^2).
3. Aluminum versions can be furnished at customer request.

OUTLINE DRAWING

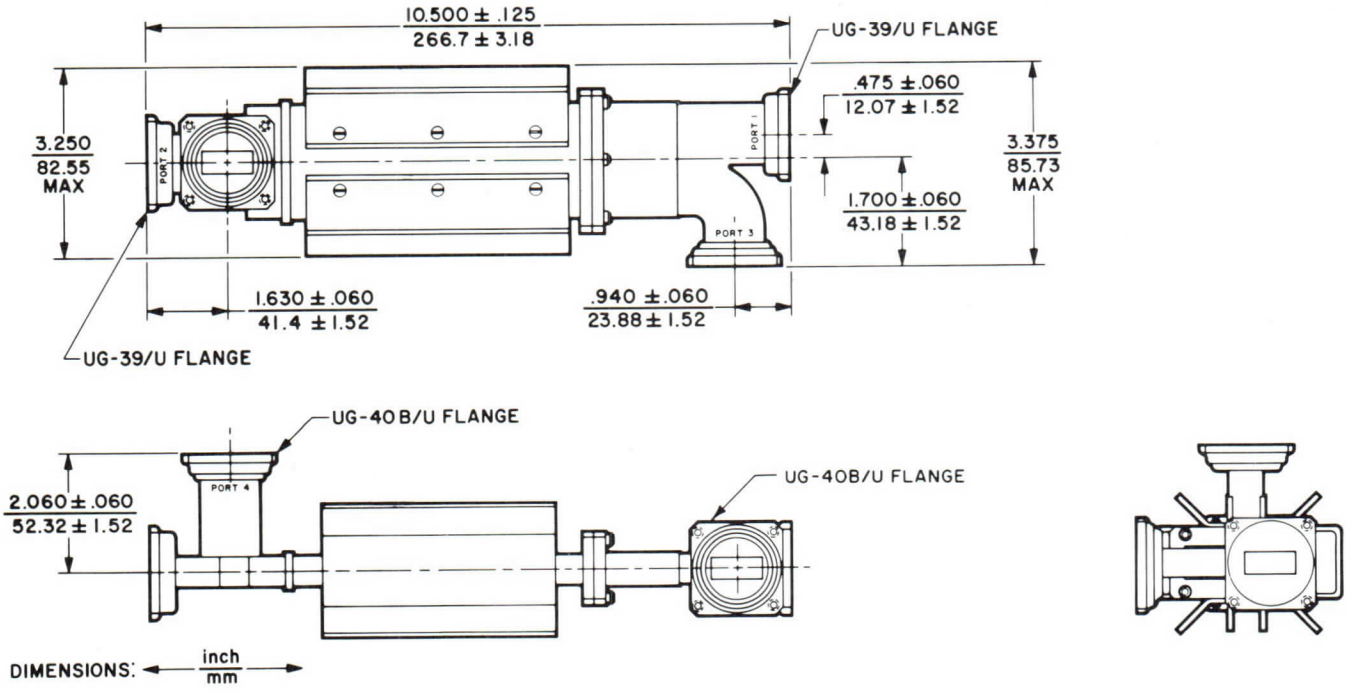

varian
palo alto tube division

TECHNICAL DATA

H90DA2

HIGH POWER CIRCULATOR

9.6-11.5 GHz
2kW

DESCRIPTION

The H90DA2 is a four-port, differential-phase-shift circulator for use as a duplexer or isolator in the frequency range of 9.6 to 11.5 gigahertz. As a duplexer, with a load at Port 4, isolation between the transmitter and antenna ports is greater than 20 dB; insertion loss is less than 0.3 dB. With loads at Ports 3 and 4, this circulator can be used as a high-power isolator with the same electrical performance. This unit is ideal for use with a traveling wave tube output amplifier. Type and orientation of waveguide ports can be modified to meet special customer requirements. This device normally requires only natural air convection for cooling.

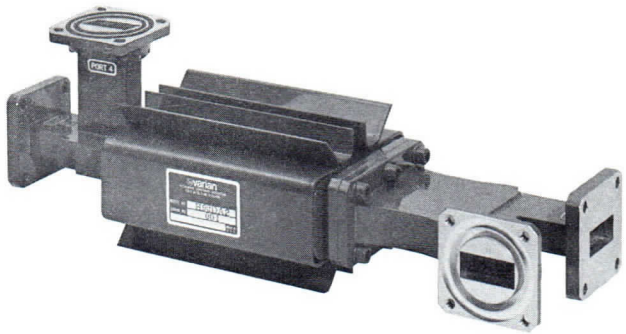

GENERAL CHARACTERISTICS[1]

ELECTRICAL

Frequency Range	9.6 to 11.5 GHz
Power Handling Capacity	2 kW
Isolation, min	20 dB
Insertion Loss, max	0.3 dB
Load VSWR, max	2:1
Input VSWR, max	1.2:1

PHYSICAL

Dimensions	See Outline Drawing
Weight	5 lb
Cooling[2]	Natural Air Convection
Ambient Air Temperature, max	40 °C
Waveguide Pressurization,[3] max	20 lbf/in²g
R-F Flanges	See Outline Drawing
Standard Finish[4]	Red Copon Epoxy
Material	Copper Alloy

NOTES:

1. Characteristic values are based on performance tests. These figures may change without notice as the result of additional data or product refinement. Contact the Varian Palo Alto Tube Division before using this information for equipment design.
2. Operation in ambient air temperatures above 40 °C requires forced-air cooling. For forced-air-cooling information, contact the Varian Palo Alto Tube Division.
3. Although waveguide pressurization above normal atmospheric pressure is not required, this device may be pressurized to a gauge pressure of 20 pound-force per square inch.
4. Other finishes are available on special order.

2307 4/70

Printed in U.S.A.

OUTLINE DRAWING

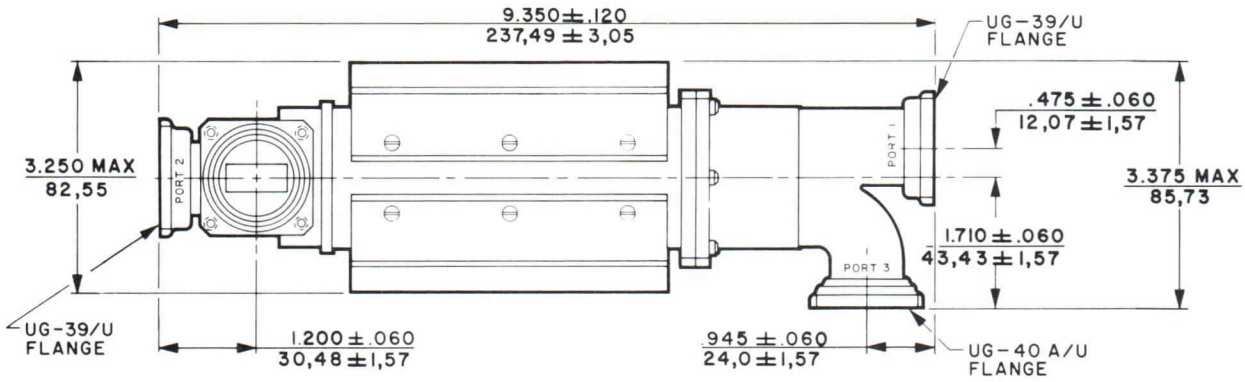

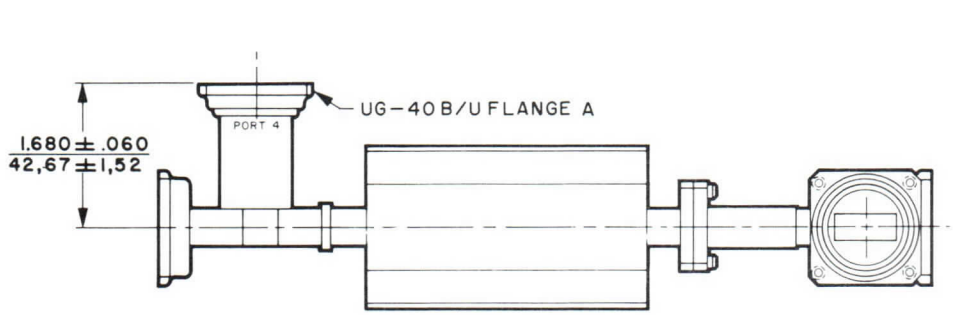

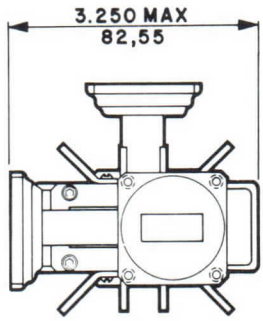

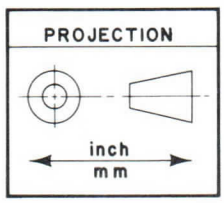

varian
palo alto tube division

TECHNICAL DATA

W90AA1

HIGH POWER MICROWAVE WINDOW
9.0-10.0 & 10.1-11.3 GHz
1.0 MW, peak
10 kW, average

DESCRIPTION

The W90AA1 is a liquid-cooled, disc-type ceramic window. This unit is ideal for use with WR90 waveguide as a pressure separator in high-power pulsed-radar systems operating between 9 and 10 gigahertz and 10.1 and 11.3 gigahertz. This window, which is similar to windows used on Varian high-power microwave tubes, is conservatively rated to handle average power at the 10 kilowatt level. As a pressure separator, it allows pressurization of waveguide sections between the transmitting tube and antenna. Because the ceramic is sealed and hard brazed to the OFHC copper waveguide, this window can also be used to separate evacuated sections of waveguide from the pressurized section with only minor flange changes. Tubing is provided on the unit to permit pressurization if it is required.

GENERAL CHARACTERISTICS[1]

ELECTRICAL

Frequency Range	9.0 - 10.0 & 10.1 - 11.3 GHz
Peak Power Transmission	
Dry Air, at sea level	150 kW
Dry Air, 30 lbf/in^2g	1 MW
Average Power Transmission	10 kW
VSWR, maximum	1.15:1

ENVIRONMENTAL[2]

Temperature	
Operating	-25 to 200 °F
Nonoperating and Storage	-40 to 250 °F
Altitude, maximum	
Operating	8,000 ft
Nonoperating and Storage	35,000 ft

PHYSICAL

Dimensions	See Outline Drawing
Weight, approximate	0.5 lb
Mounting Position	Any
Coolant	Water or Glycol/Water
Water Flow, minimum	0.5 gal/min
Pressure Drop, 0.5 gal/min	5 lbf/in^2
Static Pressure	125 lbf/in^2g
RF Flanges	Mate with modified UG-39/U
Paint[3]	Red Copon Epoxy
Window Material	AL995 Ceramic
Pressurization[4]	30 lbf/in^2g

NOTES:

1. Characteristic values are based on performance tests. These figures may change without notice as a result of additional performance data or product refinement. Contact Varian Palo Alto Tube Division, Microwave Components Operation, before using this information for equipment design.
2. For more information on environmental characteristics, contact the Varian Palo Alto Tube Division.
3. Other finishes available at customer request.
4. Waveguide pressurization is not required when operating at rated average power.

2404 6/70

Printed in U.S.A.

OUTLINE DRAWING

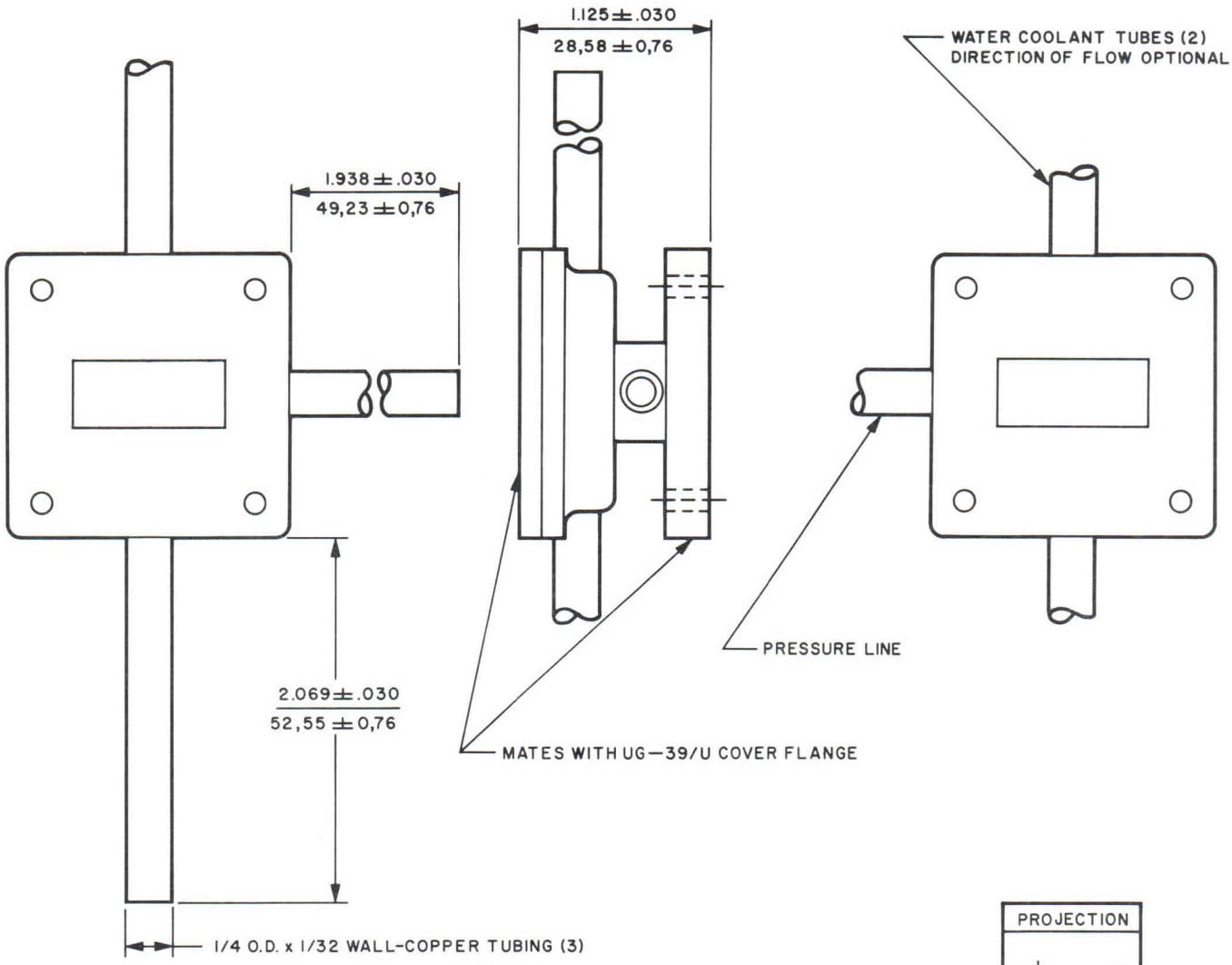

varian
palo alto tube division

TECHNICAL DATA

W90BB5

HIGH POWER MICROWAVE WINDOW

8.9-10.2 GHz

170 kW, peak
2.5 kW, average

DESCRIPTION

The W90BB5 is a broadband, half-wavelength-thick ceramic window. It is ideal for use with WR90 waveguide as a pressure separator or an arc-impeding device in high-power pulsed-radar systems operating between 8.9 and 10.2 gigahertz. As a pressure separator, it allows pressurization of waveguide sections between the transmitting tube and antenna. Because the ceramic is sealed and hard brazed to the OFHC copper waveguide, this window can be used to separate evacuated sections of waveguide from pressurized sections with only minor flanging changes. As an arc impediment, this window temporarily stops arcs which initiate down the transmission line from the tube. Arcs generally travel from the point of generation toward the power source. Many tube failures result from this phenomenon. By placing a window in the line close to the tube, the required reaction time of arc-protection systems can be extended to several hundreds of milliseconds. This window, which is similar to windows used on Varian high-power microwave tubes, is conservatively rated to handle 2.5 kilowatts of average power.

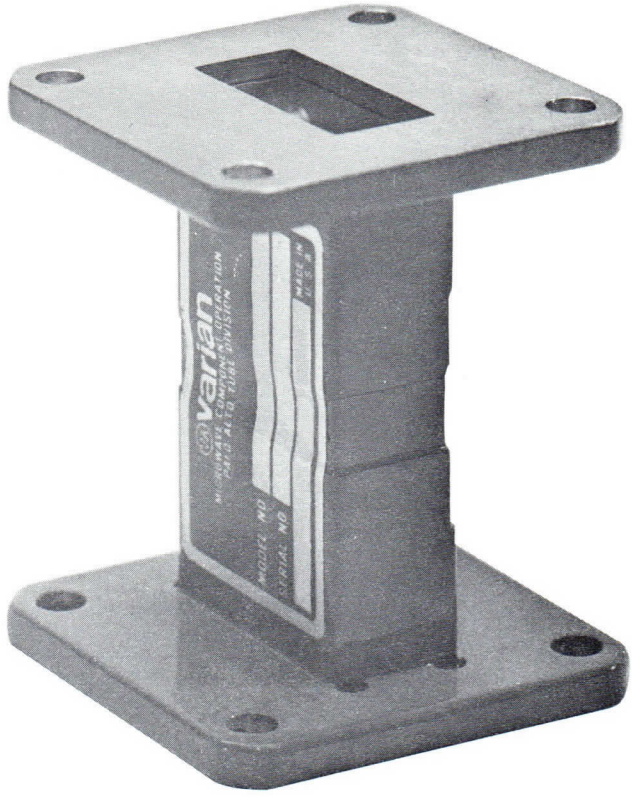

GENERAL CHARACTERISTICS[1]

ELECTRICAL

Frequency	8.9 to 10.2 GHz
Peak Power Transmission	
Dry Air, at sea level	170 kW
Dry Air, at 30 $lbf/in^2 g$	1.1 MW
Average Power Transmission	2.5 kW
VSWR, typical	1.10:1

PHYSICAL

Dimensions	See Outline Drawing
Weight	0.5 lb
Mounting Position	Any
Cooling	Convection
RF Flanges	Mate with UG-39
Paint	Red Copon Epoxy
Material	OFHC Copper, Al_2O_3 Ceramic, and Copper Alloy

ENVIRONMENTAL

Operating	
Duty	Continuous
Ambient	-30 to +70°C
Relative Humidity, including water and frost condensation	95%
Non-Operating	
Temperature	-60 to +100°C
Altitude	No limit
Shock, 50G, 11 ± 1 ms	Per Method 202, MIL-STD-202
Vibration, normal mounting	Per Method 201, MIL-STD-202

2407 6/70

Printed in U.S.A.

NOTE:

1. Characteristic values are based on performance tests. These figures may change without notice as a result of additional performance data or product refinement. Contact Varian Palo Alto Tube Division, Microwave Components Operation before using this information for equipment design.

OUTLINE DRAWING

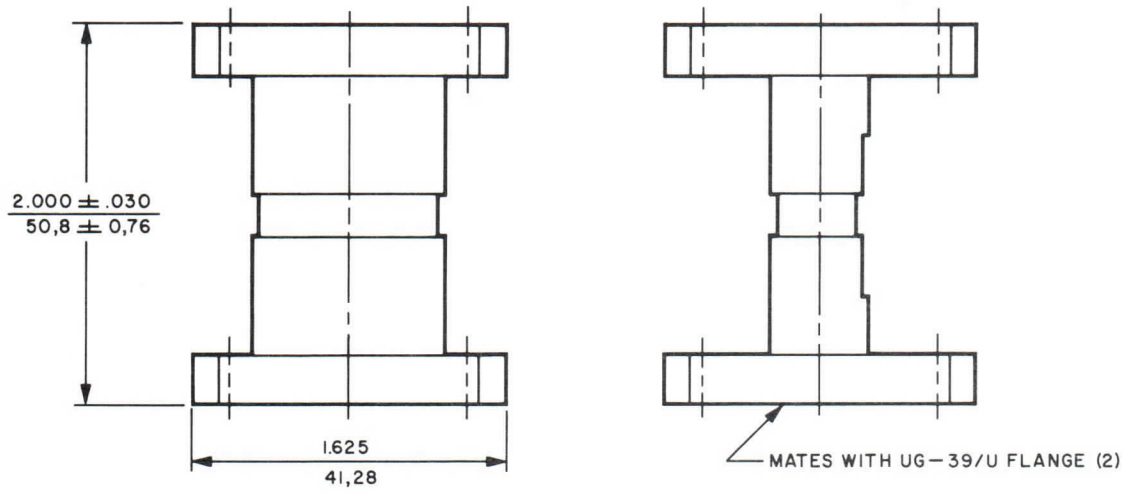

varian
electron tube and device group

TECHNICAL DATA

H112DA1

HIGH POWER CIRCULATOR

7.9-8.4 GHz
10 kW

DESCRIPTION

The H112DA1 is a four-port, differential-phase-shift circulator for use as a duplexer or isolator in military satellite-communication systems operating between 7.9 and 8.4 gigahertz. As a duplexer, with Port 4 terminated, isolation between transmitter and antenna ports is greater than 20 dB; insertion loss is less than 0.25 dB. With loads at Ports 3 and 4, this circulator can be used as a high-power isolator with the same electrical performance. Type and orientation of waveguide ports can be modified to meet special customer requirements. This device requires liquid cooling with either water or a ethylene glycol/water mixture.

GENERAL CHARACTERISTICS[1]

ELECTRICAL

Frequency Range	7.9-8.4 GHz
Power Handling Capacity	10 kW
Isolation, minimum	20 dB
Insertion Loss, maximum	0.25 dB
Input VSWR	1.1:1
Load VSWR	2:1

PHYSICAL

Dimensions	See Outline Drawing
Weight, approximate	10.5 lb
Cooling	Liquid
Flow	1 gal/min
Pressure Drop, 1 gal/min, water	10 lbf/in^2
Waveguide Pressurization[2]	5 lbf/in^2g
R-F Flanges	CPR-112F
Material	Copper Alloy
Coolant Fittings	See Outline Drawing

NOTES:

1. Characteristic values are based on performance tests. These figures may change without notice as the result of additional data or product refinement. Contact the Varian Palo Alto Tube Division before using this information for equipment design.
2. Although waveguide pressurization above normal atmospheric pressure is not required, the unit may be subjected to gauge pressures up to 5 pound-force per square inch.

2268 1/70

Printed in U.S.A.

OUTLINE DRAWING

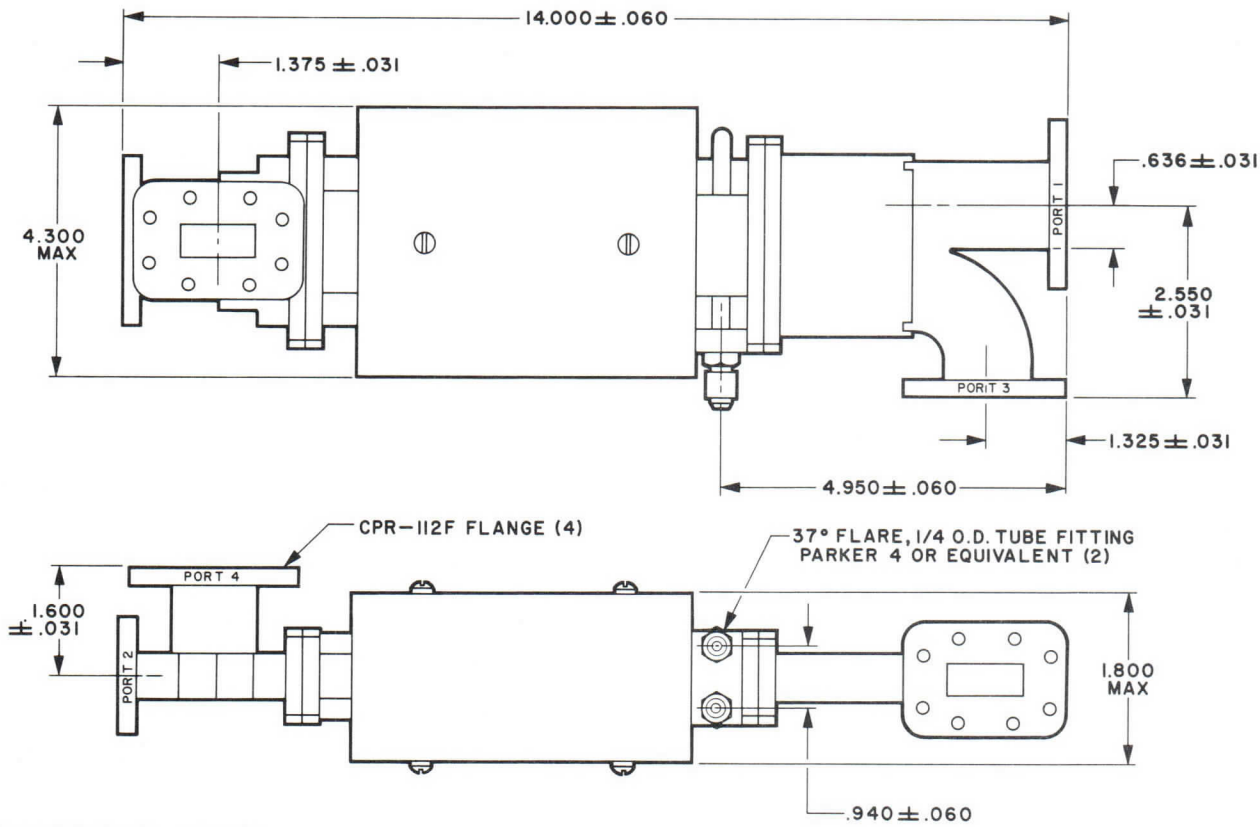

DIMENSIONS ARE IN INCHES.

varian
palo alto tube division

TECHNICAL DATA

H112DA2

HIGH POWER ISOLATOR

7.9-8.4 GHz
9 kW

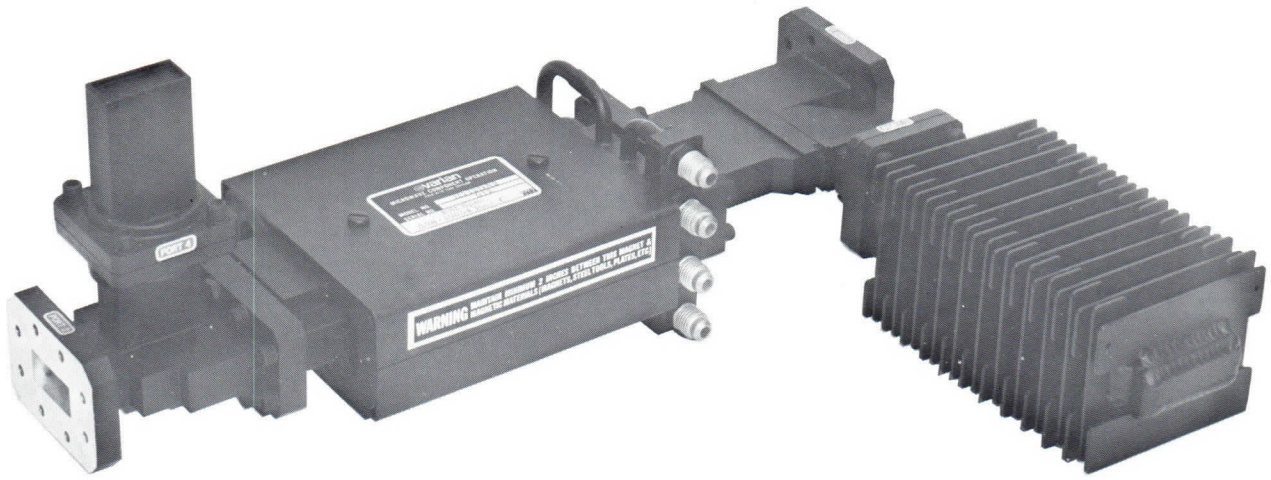

DESCRIPTION

The H112DA2 is a four-port, differential-phase-shift circulator terminated for use as an isolator in military satellite-communications systems operating between 7.9 and 8.4 gigahertz. Isolation between transmitter and antenna ports is greater than 13 dB with insertion loss less than 0.3 dB. Type and orientation of waveguide ports can be modified to meet special customer requirements. This device is provided with two completely independent cooling channels for use in systems requiring redundancy with standby cooling capability.

GENERAL CHARACTERISTICS[1]

ELECTRICAL

Frequency Range	7.9-8.4 GHz
Power Handling Capacity	9 kW
Isolation, minimum	13 dB
Insertion Loss, maximum	0.3 dB
Input VSWR	1.15:1
Load VSWR	2:1

PHYSICAL

Dimensions	See Outline Drawing
Weight, approximate	12.5 lb
Cooling	Liquid
Flow	1 gal/min
Pressure Drop, 1 gal/min, water	10 lbf/in^2
Waveguide Pressurization[2]	5 lbf/in^2g
R-F Flanges	CPR-112F
Material	Copper Alloy
Coolant Fittings	See Outline Drawing

NOTES:

1. Characteristic values are based on performance tests. These figures may change without notice as the result of additional data or product refinement. Contact the Varian Palo Alto Tube Division before using this information for equipment design.
2. Although waveguide pressurization above normal atmospheric pressure is not required, the unit may be subjected to gauge pressures up to 5 pound-force per square inch.

2501 10/70

Printed in U.S.A.

OUTLINE DRAWING

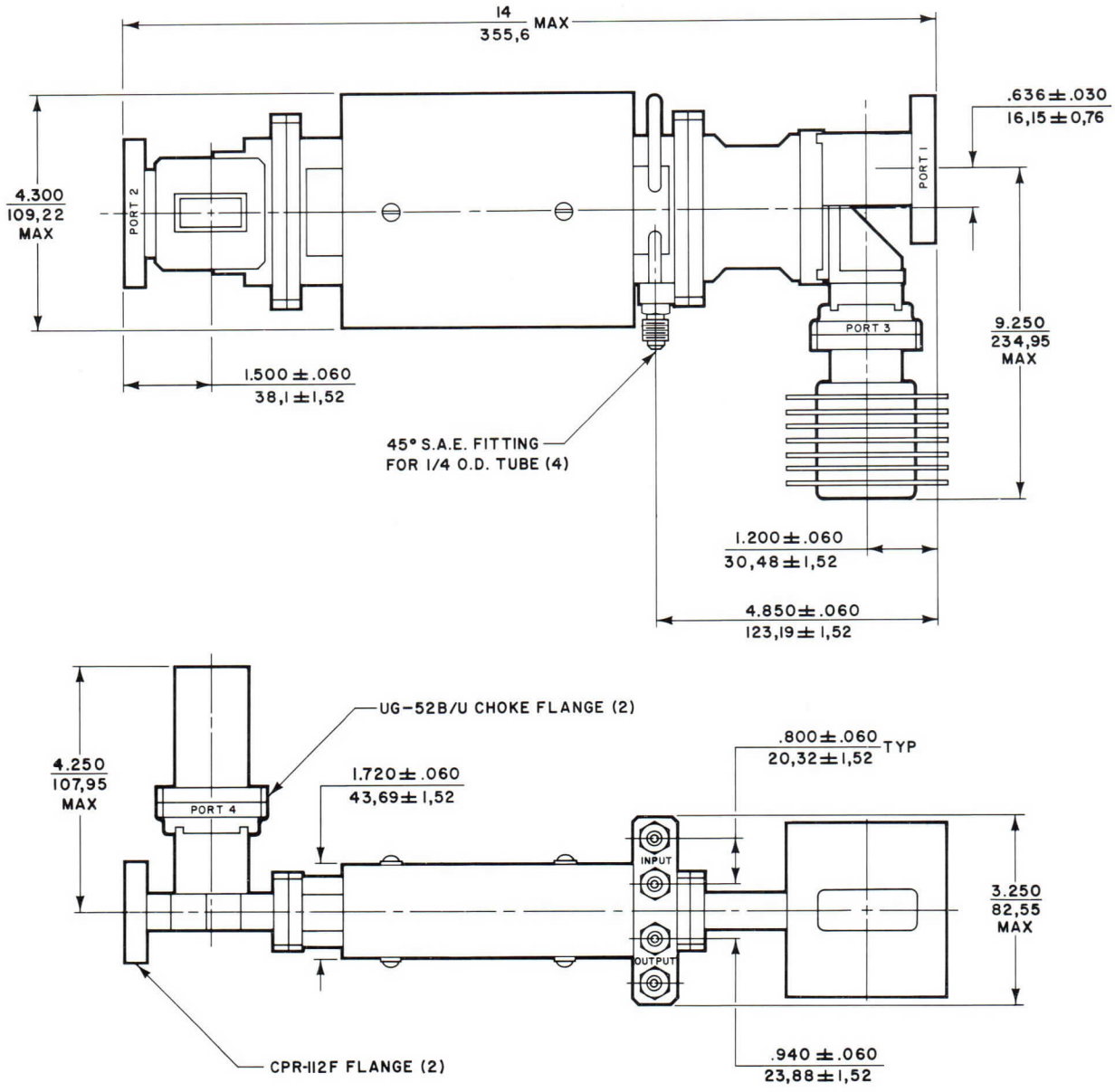

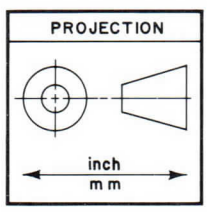

varian
electron tube and device group

TECHNICAL DATA

H112DA3

HIGH POWER CIRCULATOR

7.8-8.2 GHz
20 kW

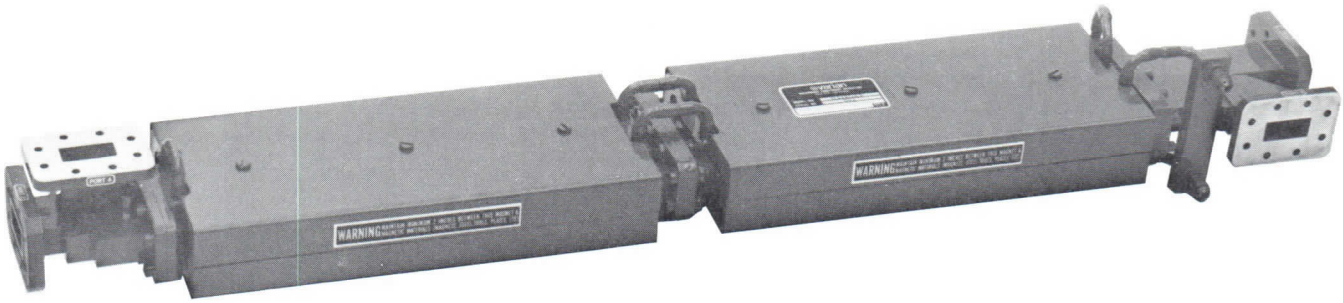

DESCRIPTION

The H112DA3 is a liquid-cooled, four-port, differential-phase-shift circulator for use in high-power CW systems operating between 7.8 and 8.2 gigahertz. It can handle 20 kilowatts under short-circuit load conditions. With loads at ports 3 and 4, this circulator can also be used as a high-power isolator with the same electrical performance. Isolation between ports is at least 20 dB and insertion loss is less than 0.3 dB.

GENERAL CHARACTERISTICS[1]

ELECTRICAL

Frequency Range	7.8 to 8.2 GHz
Power Handling Capacity	20 kW
Isolation, minimum	20 dB
Insertion Loss, maximum	0.3 dB
Load VSWR, maximum	Short Circuit
Input VSWR, maximum	1.15:1

PHYSICAL

Dimensions	See Outline Drawing
Weight, approximate	33 lb
Mounting Position	Any
Cooling	Liquid
Water Flow	1 gal/min
Pressure Drop, at 1 gal/min	30 lbf/in^2
R. F. Flanges	
Ports 1 and 2	CPR0112G
Ports 3 and 4	CPR-112F
Standard Finish[2]	Red Copon Epoxy
Material	Copper Alloy

NOTES:

1. Characteristic values are based on performance tests. These figures may change without notice as the result of additional data or product refinement. Contact Varian Palo Alto Tube Division before using this information for equipment design.
2. Other finishes are available upon request.

2269 1/70

Printed in U.S.A.

OUTLINE DRAWING

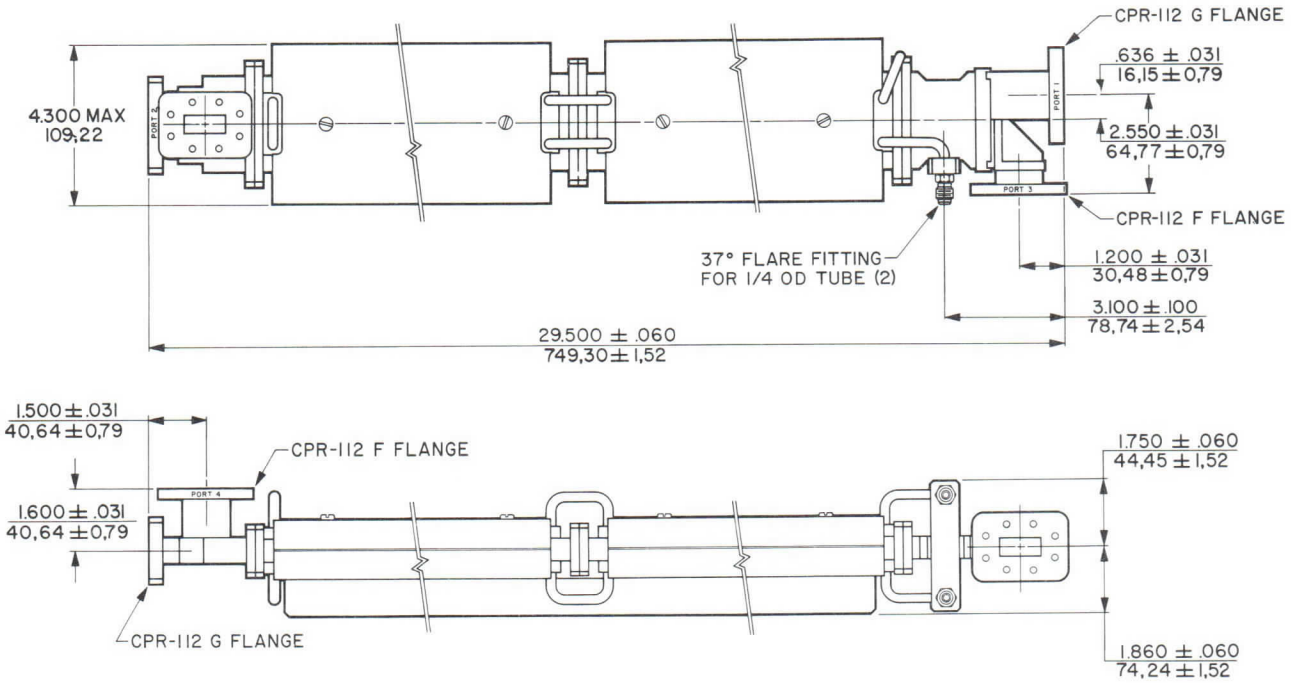

varian

TECHNICAL DATA

H112DA8

HIGH POWER CIRCULATOR

7.9-8.4 GHz
5 kW

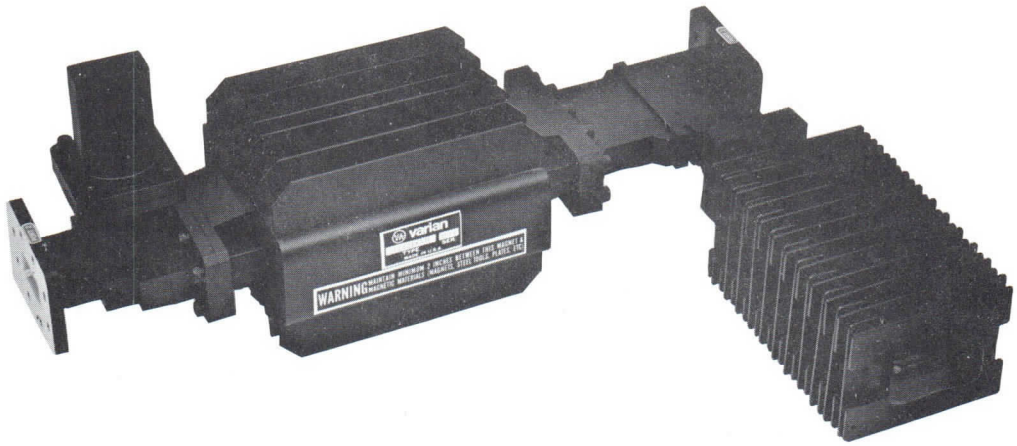

DESCRIPTION

The H112DA8 is a four-port, differential-phase-shift circulator for use as a duplexer or isolator in military satellite-communication systems operating between 7.9 and 8.4 gigahertz. As a duplexer, with Port 4 terminated, isolation between transmitter and antenna ports is greater than 23 dB; insertion loss is less than 0.25 dB. With loads at Ports 3 and 4, this circulator can be used as a high-power isolator with the same electrical performance. Type and orientation of waveguide ports can be modified to meet special customer requirements. This device requires forced-air cooling of about 20 ft^3/min(9.4 l/s).

GENERAL CHARACTERISTICS [1]

ELECTRICAL

Frequency Range	7.9-8.4 GHz
Power Handling Capacity	5 kW
Isolation, minimum	23 dB
Insertion Loss, maximum	0.25 dB
VSWR, port 1, maximum	
Matched Load at port 2	1.05:1
Port 2 load VSWR at 1.5:1	1.1:1

PHYSICAL

Dimensions	See Outline Drawing
Weight, approximate	10 lb/4.5 kg
Cooling	Forced Air
Air Flow	20 ft^3/min (9.4 l/s)
Waveguide Pressurization [2]	5 $lbf/in^2 g$ (0.35 $kgf/cm^2 g$)
R-F Flanges	CPR-112F
Material	Copper Alloy
Standard Finish [3]	Varian Red

NOTES:

1. Characteristic values are based on performance tests. These figures may change without notice as the result of additional data or product refinement. Contact the Varian Palo Alto Microwave Tube Division, Microwave Components Operation, before using this information for final equipment design.
2. Although waveguide pressurization above normal atmospheric pressure is not required, the unit may be pressurized up to 5 $lbf/in^2 g$ (0.35 $kgf/cm^2 g$).
3. Other finishes are available on request.

5561 5/76

Printed in U.S.A.

SCHEMATIC OF FERRITE CIRCULATOR WITH OTHER COMPONENTS

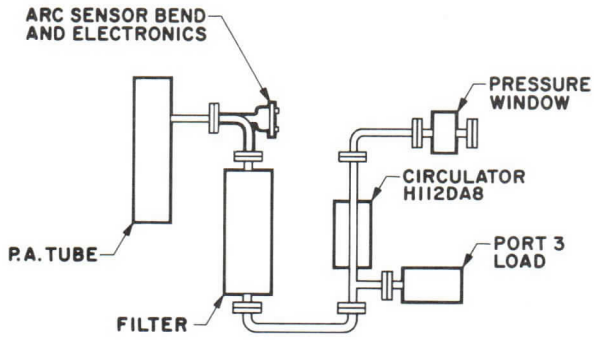

OUTLINE DRAWING

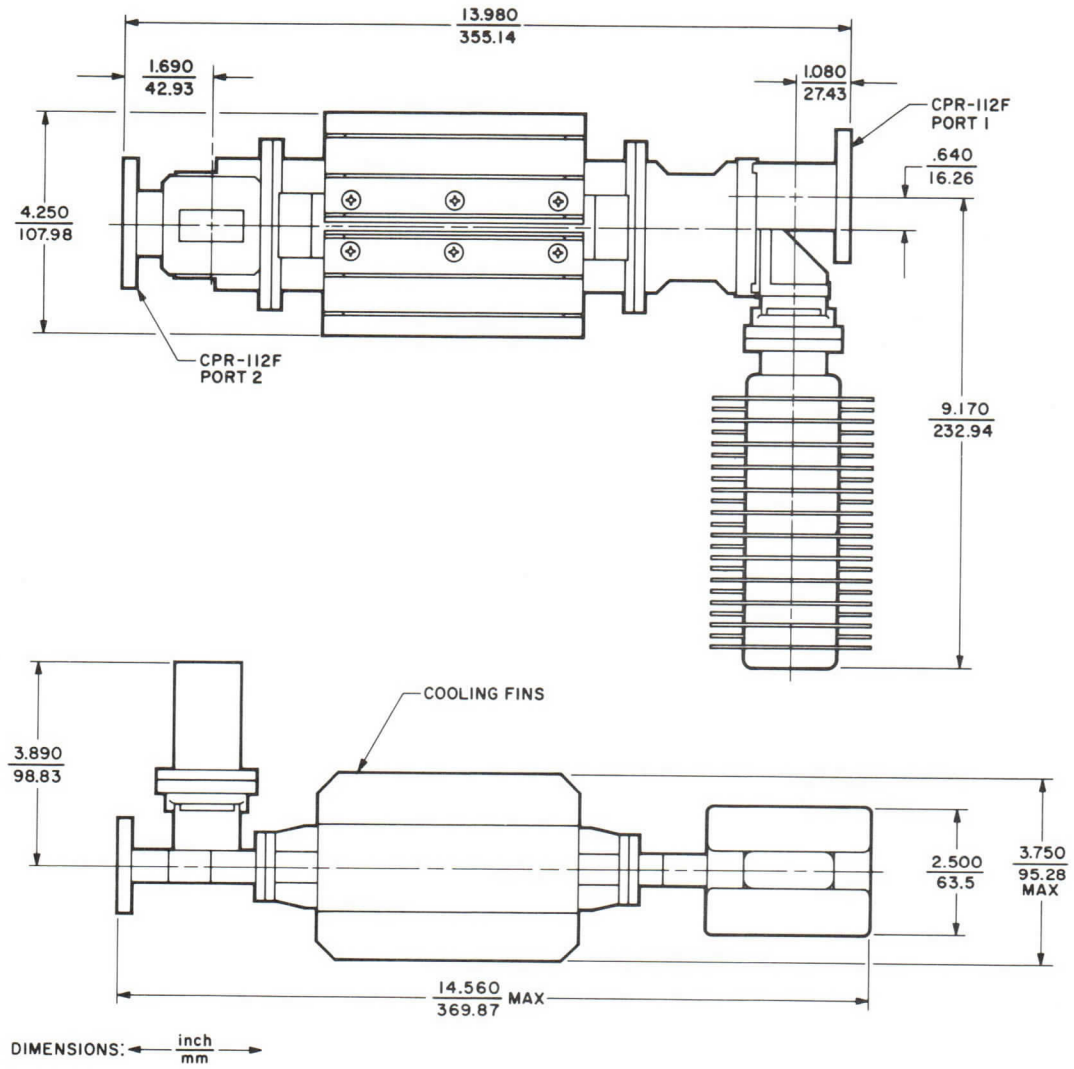

varian

TECHNICAL DATA

C137EA3

DUAL
DIRECTIONAL COUPLER
5.925-6.425 GHz
20 kW CW

DESCRIPTION

C137EA3 four-port, dual directional coupler is for use in commercial communications systems. It can handle CW power up to 20 kilowatts in the forward direction. Power can also be channeled to monitoring devices in both the forward and reverse directions. This coupler, when used with a WR-137 waveguide, passes power in the frequency range of 5.925 to 6.425 gigahertz. The C137EA3 has an insertion loss of less than 0.1 dB and directivity of more than 30 dB. The coupler is small in size and is convection and radiation cooled.

GENERAL CHARACTERISTICS[1]

ELECTRICAL

Frequency Range	5.900 to 6.450 GHz
Power CW	20 kW
Insertion Loss, maximum	0.1 dB
VSWR	1.08
Directivity, minimum	30 dB
Coupling	
Forward (2 ports)	50 ± 1 dB
Reverse (2 ports)	40 ± 1 dB

PHYSICAL

Dimensions	See Outline Drawing
Weight, approximately	6 lb/2.7 kg
Mounting Position	Any
Cooling	Convection and Radiation
Pressurization Capability	15 lbf/in^{2}g (1.05 kgf/cm^{2}g)
RF Input and Output Flanges[2]	CPR137F
Coupling Connectors[2]	Type N
Paint[3]	Red
Material	Copper Alloy

ENVIRONMENTAL[4]

Temperature	
Operating	0 to 110 °F
Nonoperating and Storage	-40 to 125 °F
Altitude	
Operating	8,000 ft/2.4 km
Nonoperating and Storage	35,000 ft/10.5 km

OUTLINE DRAWING

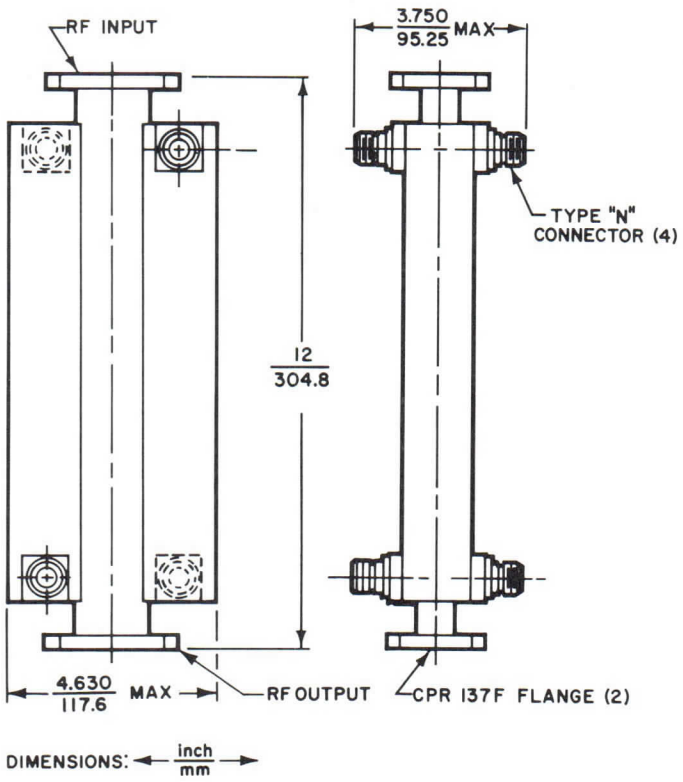

NOTES:

1. Characteristic values are based on performance tests. These figures may change without notice as a result of additional data or product refinement. Contact the Varian Palo Alto Microwave Tube Division, Microwave Components Operation, before using this information for final equipment design.
2. Other flanges and connectors are available on request.
3. Other finishes are available at customer request.
4. For more information on environmental characteristics, contact Varian Palo Alto Microwave Tube Division.

3554 5/75

Printed in U.S.A.

varian
palo alto microwave tube division

TECHNICAL DATA

D137
Series
HIGH POWER DIPLEXERS
5.925-6.425 GHz
3-10 kW

DESCRIPTION

The D137AA1, D137AA2, and D137AA3 are three-port diplexers designed for use in commercial satellite-communication transmitters which operate between 5.925 and 6.425 gigahertz. The units can handle power levels from 3 to 10 kilowatts in each of two input ports while providing at least 25 dB of isolation between these ports. Power loss in the bandpass is very low at both band center and band edges. The D137AA1 and D137AA3 are normally supplied with a dry load termination at the load port. For the D137AA2, it is optional. The D137AA3 is also provided with an integral fan for forced-air cooling. For lower-power applications, a model can be supplied without the fan.

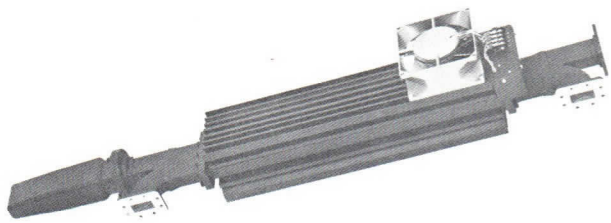

D137AA3

GENERAL CHARACTERISTICS [1]

ELECTRICAL

Type Number	Frequency Range [2] (GHz)		Power Capability (kW)		Maximum Input VSWR		Minimum Isolation (dB)		Maximum Insertion Loss (dB)			
									Port 1		Port 2	
	Port 1	Port 2	Each Port	Total	Port 1	Port 2	Ports 1 to 2	Ports 2 to 1	Band edges	Band center	Band edges	Band center
D137AA1	5.925 to 6.310	6.370 to 6.425	6	6	1.15:1	1.15:1	25	40	0.3	0.2	0.3	0.2
D137AA2	5.925 to 6.350	6.370 to 6.425	10	20	1.2:1	1.15:1	35	25	0.5	0.2	0.5	0.4
D137AA3	5.925 to 6.350	6.370 to 6.420	3	6	1.2:1	1.2:1	25	25	0.65	0.3	0.6	0.2

PHYSICAL

Dimensions ..... See Outline Drawings
Weight, approximate
- D137AA1 ..... 18 lb/8.2 kg
- D137AA2 ..... 20 lb/9.1 kg
- D137AA3 ..... 22 lb/10 kg

Mounting Position ..... Any
Ambient Temperature Range ..... 0-50 °C

Cooling
- D137AA1 ..... Convection and Radiation
- D137AA2 ..... Liquid
- D137AA3 [3] ..... Forced Air

Mating RF Flanges ..... See Outline Drawings
Standard Finish ..... Red Copon Epoxy
Material ..... Copper Alloy

NOTES:

1. Characteristic values are based on performance tests. These figures may change without notice as the result of additional data or product refinement. Consult Palo Alto Microwave Tube Division, before using this information for final equipment design.
2. In the D137AA1, the maximum time delay is 3.5 nanoseconds over the entire frequency range of either band.
3. The fan operates from a 200-volt, 50-hertz supply. Fans which operate from other supplies as well as other types of air-flow interlocks can be furnished upon request.

3407 6/75

Printed in U.S.A.

OUTLINE DRAWINGS

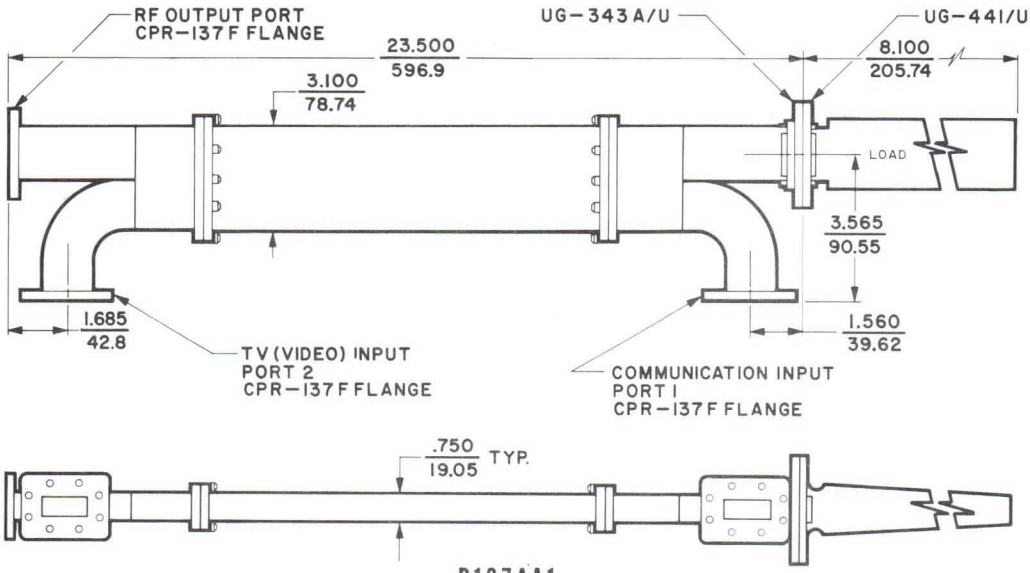

D137AA1

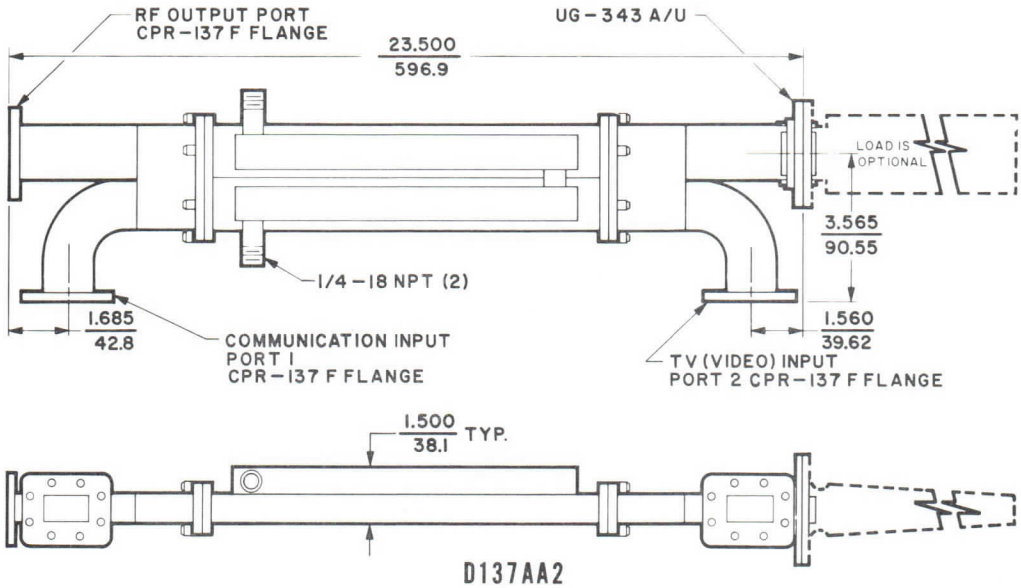

D137AA2

DIMENSIONS ← inch / mm →

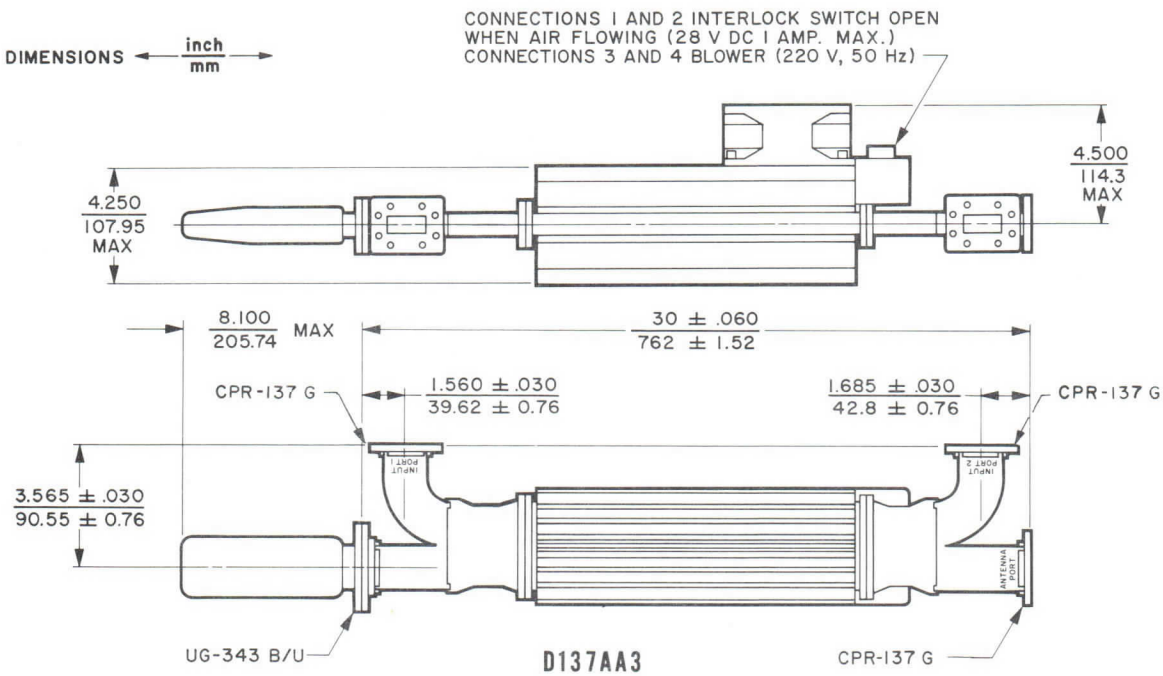

D137AA3

varian
electron tube and device group

TECHNICAL DATA

H137DA2

HIGH POWER CIRCULATOR

5.925-6.425 GHz
3 kW,CW

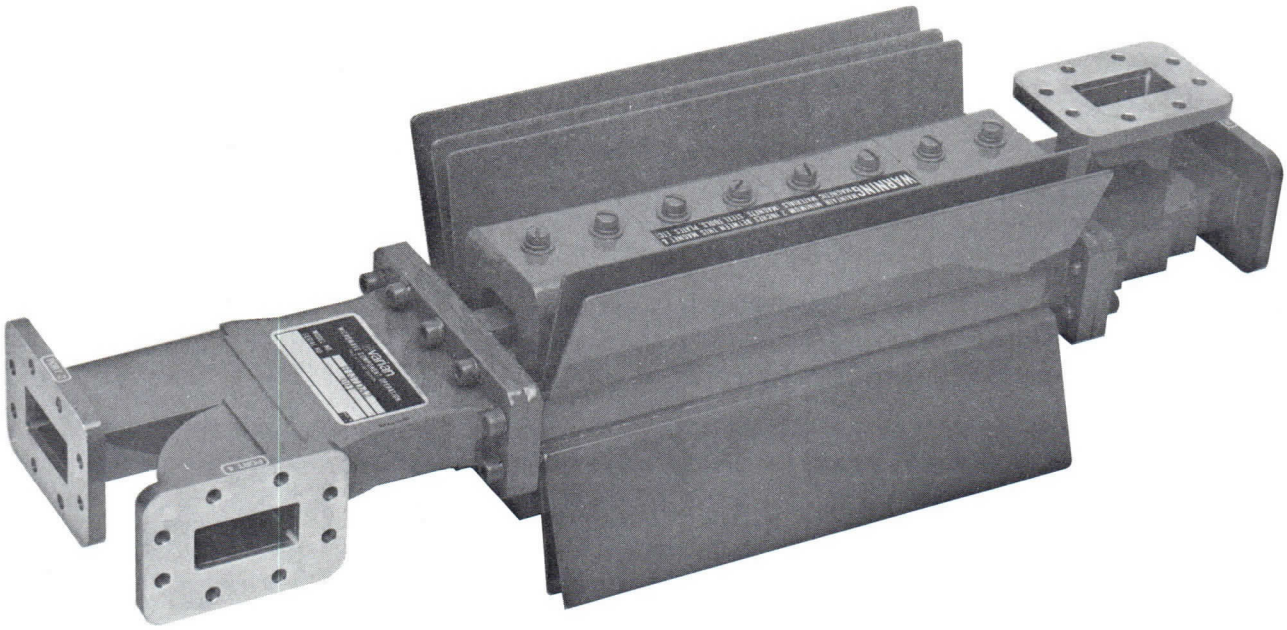

DESCRIPTION

The H137DA2 is an air cooled, four-port, differential-phase shift circulator for use as a duplexer or isolator in the satellite communication frequency range of 5.925 to 6.425 gigahertz. As a duplexer with a load at port 4, isolation between the transmitter and antenna ports is greater than 23 dB; insertion loss is less than 0.3 dB. With loads at ports 3 and 4, this circulator can be used as a high-power isolator with the same electrical performance. The H137DA2 can handle up to 3 kilowatts of average power under a short-circuit load condition. Types and orientation of waveguide ports can be modified to meet special customer requirements.

GENERAL CHARACTERISTICS[1]

ELECTRICAL

Frequency Range	5.925 to 6.425 GHz
Power Handling Capacity	3.0 kW
Isolation, minimum	23 dB
Insertion Loss, maximum	0.3 dB
Load VSWR, maximum	Short Circuit
Input VSWR, maximum	1.1:1

PHYSICAL

Dimensions	See Outline Drawing
Weight	20 lb
Cooling[2]	Conduction or Forced Air
Ambient Air Temperature, max	40 °C
Waveguide Pressurization, max[3]	20 lbf/in²g
RF Flanges	CPR-137F
Standard Finish[4]	Red Copon Epoxy
Material	Copper Alloy

NOTES:

1. Characteristic values are based on performance tests. These figures may change without notice as the result of additional data or product refinement. Contact Varian Palo Alto Tube Division before using this information for equipment design.
2. For ambient air temperatures above 40 °C, forced-air cooling must be provided.
3. Although waveguide pressurization above normal atmospheric pressure is not required, this device may be pressurized to a gauge pressure of 20 pound force per square inch.
4. Other finishes are available on special order.

2270 1/70

Printed in U.S.A.

palo alto tube division/611 hansen way/palo alto/california 94303

OUTLINE DRAWING

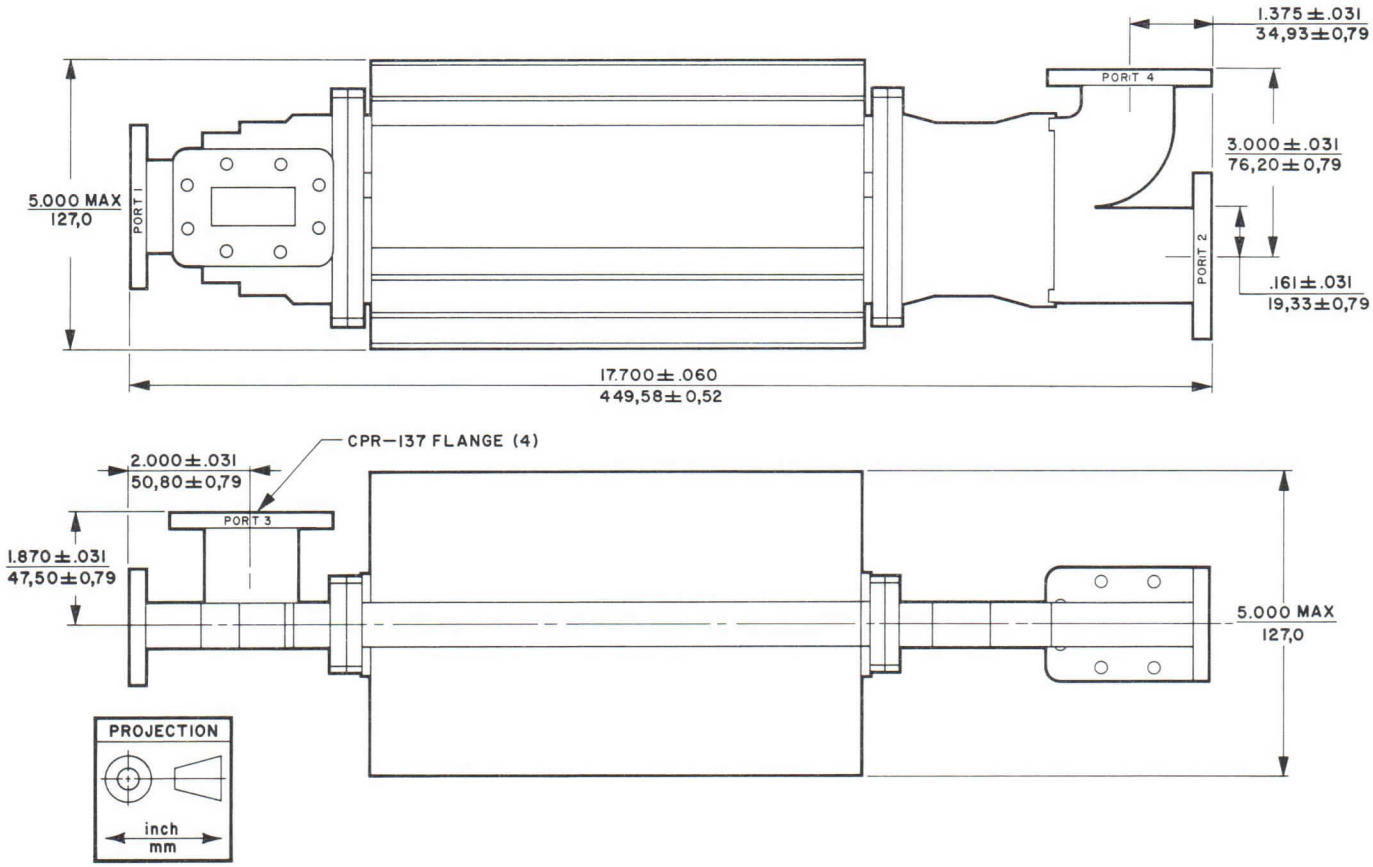

varian
palo alto tube division

TECHNICAL DATA

W137AA1

HIGH POWER MICROWAVE WINDOW

7.9-8.4 GHz

DESCRIPTION

The WR137AA1 is a liquid-cooled, poker-chip, ceramic window. It is ideal for use with WR137 waveguide as a pressure separator in high-power military satellite communication systems operating between 7.9 and 8.4 gigahertz. This window, which is similar to windows used on Varian klystrons and traveling-wave tubes, is conservatively rated to handle CW power at the 20 kilowatt level. As a pressure separator, it allows pressurization of waveguide sections between the transmitting tube and antenna. Because the ceramic is sealed and hard brazed to the OFHC Copper waveguide, this window can be used to separate evacuated sections of waveguide from the pressurized sections with only minor flange changes.

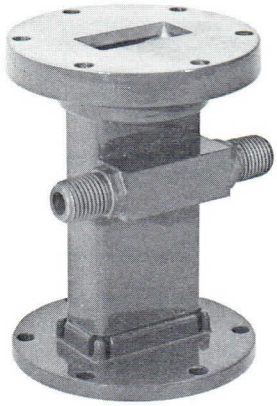

GENERAL CHARACTERISTICS[1]

ELECTRICAL

Frequency Range	7.9 to 8.4 GHz
Power, CW	20 kW
Power Loss, approximate	3 W/kW
VSWR, maximum	1.15:1

ENVIRONMENTAL[2]

Temperature	
Operating	-25 to 200 °F
Nonoperating and Storage	-40 to 250 °F
Altitude, maximum	
Operating	8,000 ft
Nonoperating and Storage	35,000 ft

PHYSICAL

Dimensions	See Outline Drawing
Weight, approximate	2.5 lb
Mounting Position	Any
Coolant, by weight	60/40 Ethylene Glycol/Water
Flow, minimum	0.5 gal/min
Pressure Drop, 0.5 gal/min	1.0 lbf/in^2
Static Pressure	125 lbf/in^{2}g
R-F Connectors	Mate with UG-344/U
Paint[3]	Red Copon Epoxy
Window Material	AL995 Ceramic
Pressurization[4]	30 lbf/in^{2}g

NOTES:

1. Characteristic values are based on performance tests. These figures may change without notice as a result of additional performance data or product refinement. Contact Varian Palo Alto Tube Division, Microwave Components Operation, before using this information for equipment design.
2. For more information on environmental characteristics, contact the Varian Palo Alto Tube Division.
3. Other finishes available at customer request.
4. Waveguide pressure is not required to operate at rated CW power level.

2340 3/70

Printed in U.S.A.

OUTLINE DRAWING

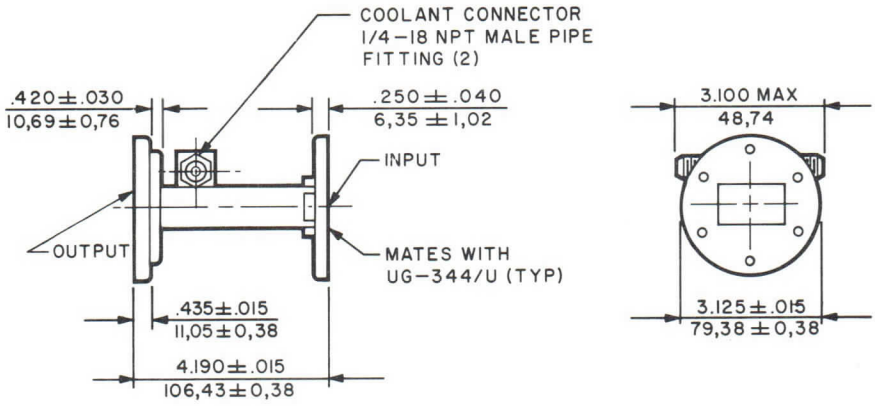

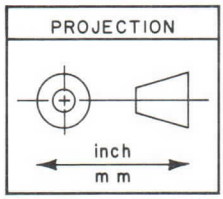

varian
palo alto tube division

TECHNICAL DATA

W137BA3

HIGH POWER MICROWAVE WINDOW

7.9-8.4 GHz
40 kW CW

DESCRIPTION

The W137BA3 is a broadband, half-wavelength-thick ceramic window. It is ideal for use with WR137 waveguide as a pressure separator or an arc-impeding device in military satellite-communication systems operating between 7.9 and 8.4 gigahertz. As a pressure separator, it allows pressurization of waveguide sections between the transmitting tube and antenna. Because the ceramic is sealed and hard brazed to the OFHC copper waveguide, this window can be used to separate evacuated sections of waveguide from pressurized sections with only minor flanging changes. As an arc impediment, this window temporarily stops arcs which initiate down the transmission line from the tube. Arcs generally travel from the point of generation toward the power source. Many tube failures result from this phenomenon. By placing a window in the line close to the tube, the required reaction time of arc-protection systems can be extended to several hundreds of milliseconds. This window, which is similar to windows used on Varian high-power microwave tubes, is conservatively rated to handle 40 kilowatts of CW power.

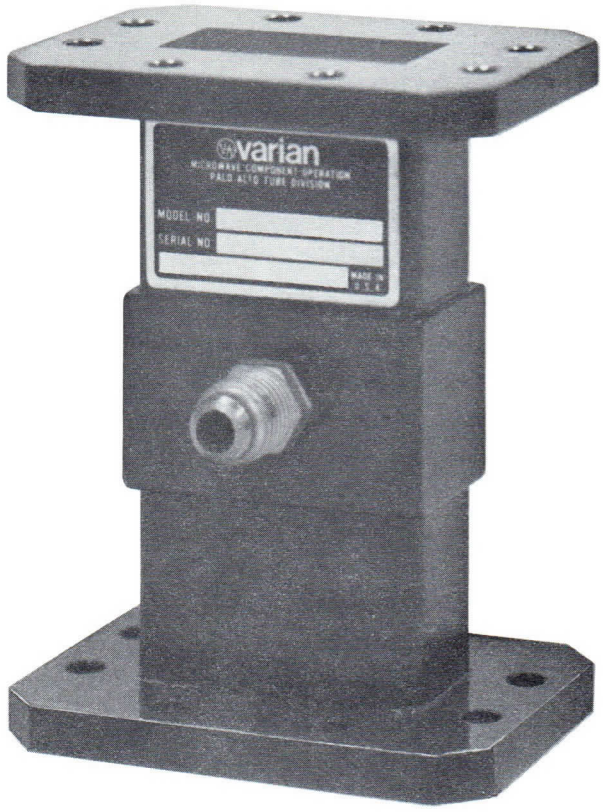

GENERAL CHARACTERISTICS [1]

ELECTRICAL

Frequency	7.9 to 8.4 GHz
CW Power Transmission	40 kW
VSWR, typical	1.10:1

ENVIRONMENTAL

Operating	
Duty	Continuous
Ambient Temperature	-30 to +70 °C
Relative Humidity, including water and frost condensation	95 %
Non-Operating	
Temperature	-60 to +100 °C
Altitude	No limit
Shock, 50G, 11 ± 1 ms	Per Method 202, MIL-STD-202
Vibration, normal mounting	Per Method 201, MIL-STD-202

PHYSICAL

Dimensions	See Outline Drawing
Weight	2 lb
Mounting Position	Any
Coolant	Water or Ethylene Glycol Mixture
Water Flow, minimum	2 gal/min
Pressure Drop, at 2 gal/min	23 lbf/in^2
Static Pressure	125 $lbf/in^2 g$
RF Flanges	Mate with CPR-137F
Paint	Red Copon Epoxy
Material	OFHC Copper, AL_2O_3 Ceramic, and Copper Alloy

NOTE:

1. Characteristic values are based on performance tests. These figures may change without notice as a result of additional performance data or product refinement. Contact Varian Palo Alto Tube Division, Microwave Components Operation before using this information for equipment design.

2405 6/70

Printed in U.S.A.

OUTLINE DRAWING

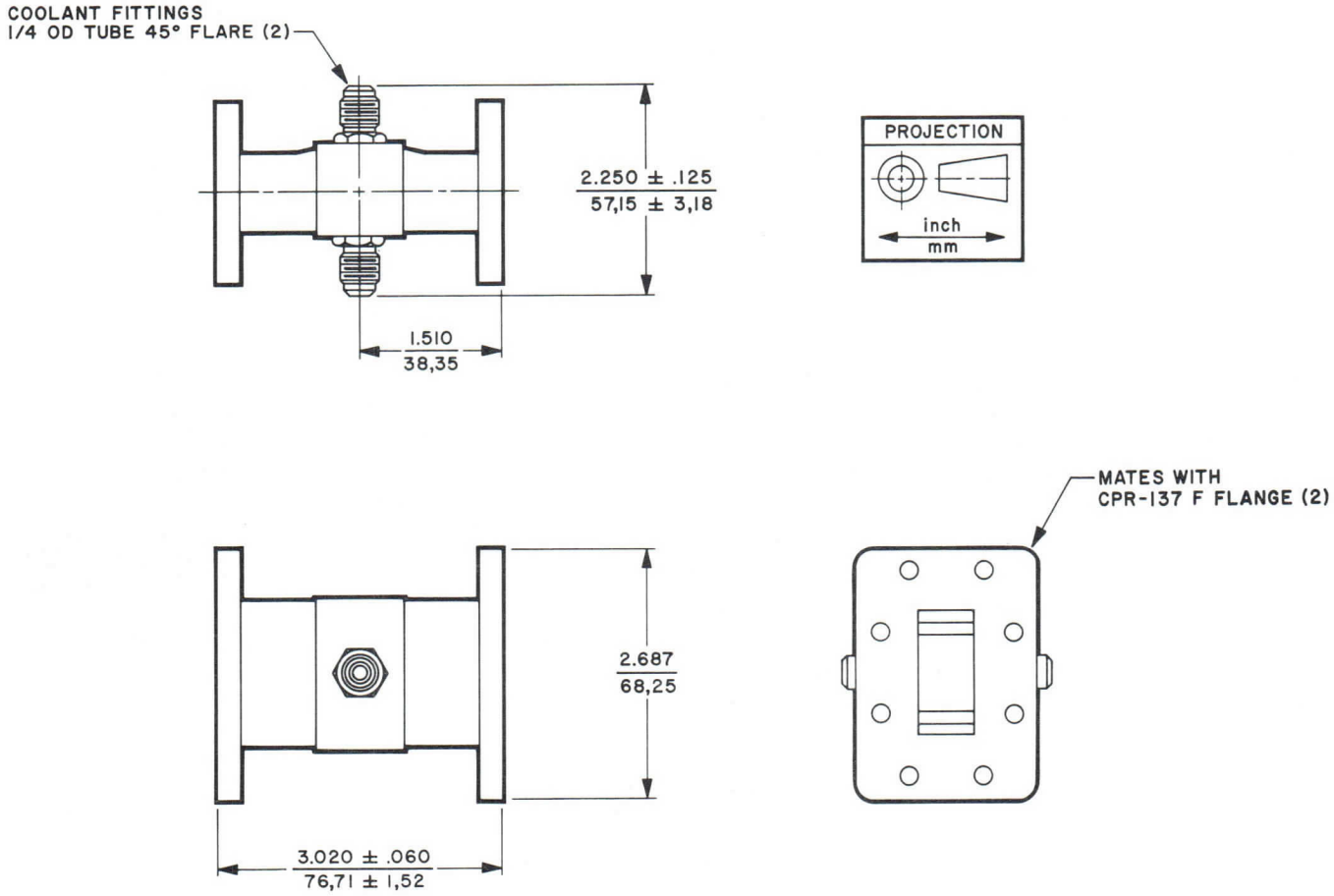

varian
palo alto tube division

TECHNICAL DATA

W137BA4

HIGH POWER MICROWAVE WINDOW

7.9-8.4 GHz
20 kW CW

DESCRIPTION

The W137BA4 is a broadband, half-wavelength-thick ceramic window. It is ideal for use with WR137 waveguide as a pressure separator or an arc-impeding device in military satellite-communication systems operating between 7.9 and 8.4 gigahertz. As a pressure separator, it allows pressurization of waveguide sections between the transmitting tube and antenna. Because the ceramic is sealed and hard brazed to the OFHC copper waveguide, this window can be used to separate evacuated sections of waveguide from pressurized sections with only minor flanging changes. As an arc impediment, this window temporarily stops arcs which initiate down the transmission line from the tube. Arcs generally travel from the point of generation toward the power source. Many tube failures result from this phenomenon. By placing a window in the line close to the tube, the required reaction time of arc-protection systems can be extended to several hundreds of milliseconds. This window, which is similar to windows used on Varian high-power microwave tubes, is conservatively rated to handle 20 kilowatts of CW power.

GENERAL CHARACTERISTICS[1]

ELECTRICAL

Frequency	7.9 to 8.4 GHz
CW Power Transmission	20 kW
VSWR, typical	1.15:1

ENVIRONMENTAL

Operating	
Duty	Continuous
Ambient Temperature	-30 to +70 °C
Relative Humidity, including water and frost condensation	95 %
Non-Operating	
Temperature	-60 to +100 °C
Altitude	No limit
Shock, 50G, 11 ± 1 ms	Per Method 202, MIL-STD-202
Vibration, normal mounting	Per Method 201, MIL-STD-202

PHYSICAL

Dimensions	See Outline Drawing
Weight	2.5 lb
Mounting Position	Any
Coolant	Water or Ethylene Glycol mixture
Water Flow, minimum	1 gal/min
Pressure Drop, 1 gal/min	6 lbf/in^2
Static Pressure	125 lbf/in^2g
RF Flanges	Mate with UG-344/U
Paint	Red Copon Epoxy
Material	OFHC Copper, AL_2O_3 Ceramic, and Copper Alloy

NOTE:

1. Characteristic values are based on performance tests. These figures may change without notice as a result of additional performance data or product refinement. Contact Varian Palo Alto Tube Division, Microwave Components Operation before using this information for equipment design.

2406 6/70

Printed in U.S.A.

OUTLINE DRAWING

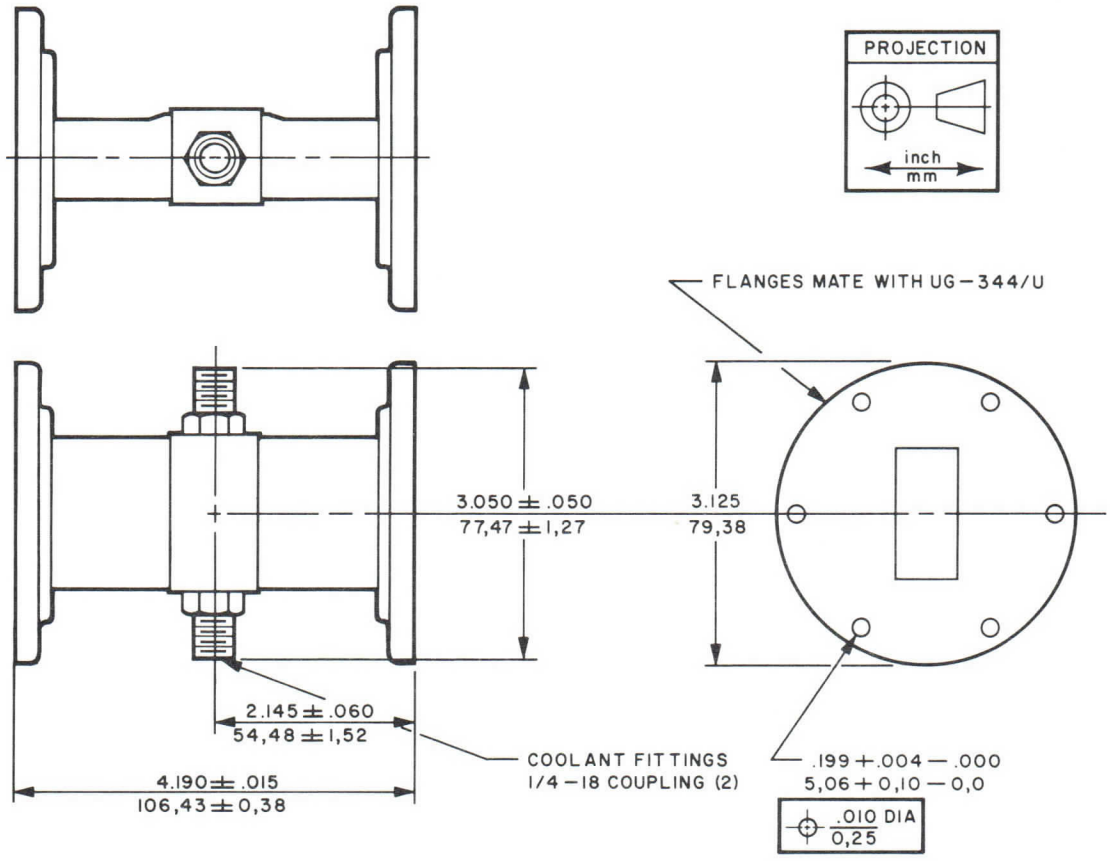

varian
palo alto microwave tube division

TECHNICAL DATA

W137BA5

SUPER POWER MICROWAVE WINDOW

DESCRIPTION

The W137BA5 is a self-resonant broadband, half-wavelength-thick ceramic window. It is ideal for use with WR137 waveguide as a pressure separator or an arc-impeding device in high-power systems operating between 5.7 and 6.5 gigahertz. As a pressure separator, it allows pressurization of waveguide sections between the transmitter tube and antenna. Because the ceramic is sealed and hard brazed to the OFHC copper waveguide, this window can be used to separate evacuated sections of waveguide from pressurized sections with only minor flanging changes. As an arc impedament, this window stops arcs which initiate down the transmission line from the tube. Arcs generally travel from the point of generation toward the power source. Many tube failures result from this phenomona. By placing a window in the line close to the tube, the required reaction time of arc-protection systems can be extended to several hundreds of milliseconds. This window, which is similar to windows used on Varian high-power klystrons and TWT's, is conservatively rated to handle CW power at the 50-kilowatt level. By substituting different ceramic bodies, higher power levels can be achieved. With each window face pressurized with dry air at a gauge pressure of 30 pound force per square inch, peak power of up to 3.5 megawatts can be transmitted. By using sulphur hexafluoride, SF_6, in the waveguide at the same pressure, the window can handle power up to 30 megawatts.

GENERAL CHARACTERISTICS

ELECTRICAL

Frequency	5.8 to 6.5 GHz
Peak Power Transmission:	
Dry air, at sea level	0.5 MW
Dry air, at 30 lbf/in^2g	3.5 MW
SF_6, at 30 lbf/in^2g	30 MW
Average Power Transmission	50 kW
VSWR, typical	1.10:1

PHYSICAL

Dimensions	See Outline Drawing
Weight	1.25 lb
Mounting Position	Any
Coolant	Water or Ethylene Glycol
Flow, minimum	0.5 gal/min
Pressure Drop, 0.5 gal/min	1.5 lbf/in^2
Static Pressure	100 lbf/in^2g
Paint	Red Copon Epoxy
Material	OFHC Copper, AL_2O_3 Ceramic, and Copper Alloy

ENVIRONMENTAL

Operating	
Duty	Continuous
Ambient Temperature	-30 to +70°C
Relative Humidity, including water and frost condensation	95%
Non-Operating	
Temperature	-60 to +100°C
Altitude	No limit
Shock, 50G, 11 ± 1 ms	Per Method 202, MIL-STD-202
Vibration, normal mounting	Per Method 201, MIL-STD-202

Characteristics and operating values are based on performance tests. These figures may change without notice as a result of additional data or product refinement. Consult Varian Associates before using this information for equipment design.

1859 2/68

Printed in U.S.A.

APPLICATION NOTES

PEAK POWER

The peak power dissipation capability of the W137BA5 depends on the dielectric and gas pressure in the waveguide. The peak power which can be handled using dry air, dry nitrogen, or sulphur hexafluoride to pressurize the waveguide is shown in "Relative Power Characteristics". Peak power is related to the dissipation rating for dry air at atmospheric pressure and sea level as unity.

VSWR

The basic design of this type of window, in waveguide sizes of WR430 and smaller, produces a maximum VSWR of 1.15:1 over about 20 per cent bandwidth. Lower values of VSWR can be provided for narrower-band models. Typical VSWR variations for this window are shown in the accompanying graph.

The W137BA5 has been optimized for use in commercial-satellite communication systems, but wider bandwidths can be obtained with a slight sacrifice of mid-band VSWR.

COOLING

This window is provided with 45° flare male fittings for 1/4" OD tubing. The coolant to be used is optional with the user. The flow rate for adequate cooling is 0.5 gallon per minute at an average power of 50 kilowatts. As a rule of thumb, the user can lower the flow by 0.1 gallon per minute for every 10-kilowatt reduction in average power. The accompanying curve shows pressure drop plotted as a function of flow rate.

OUTLINE DRAWING

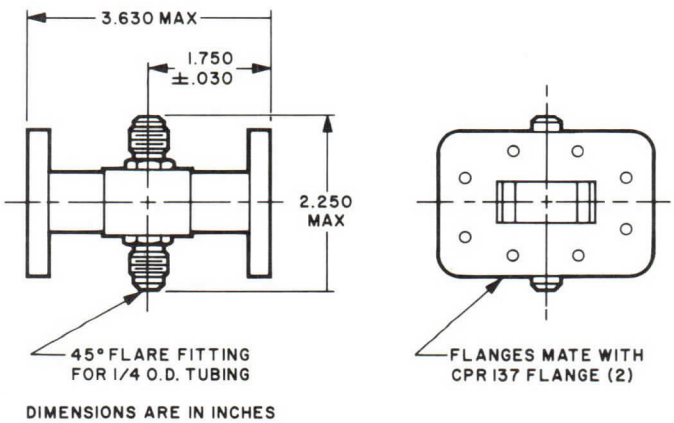

DIMENSIONS ARE IN INCHES

CHARACTERISTIC CURVES

RELATIVE POWER CHARACTERISTICS

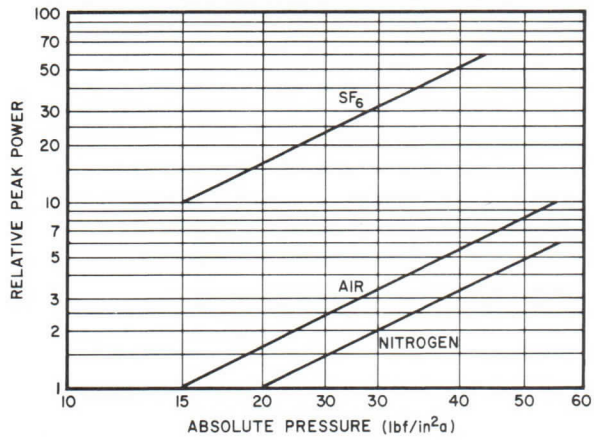

TYPICAL VSWR CHARACTERISTIC

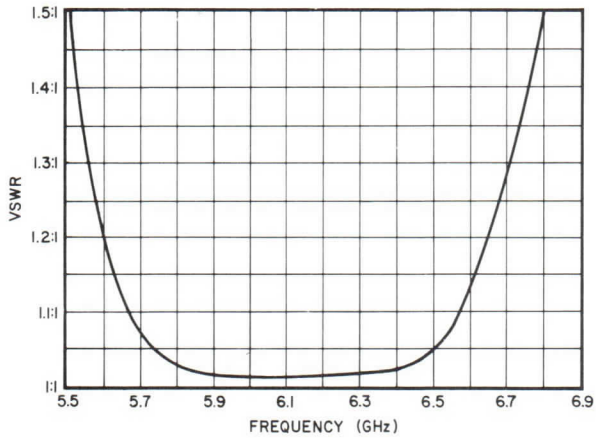

COOLANT FLOW CHARACTERISTIC

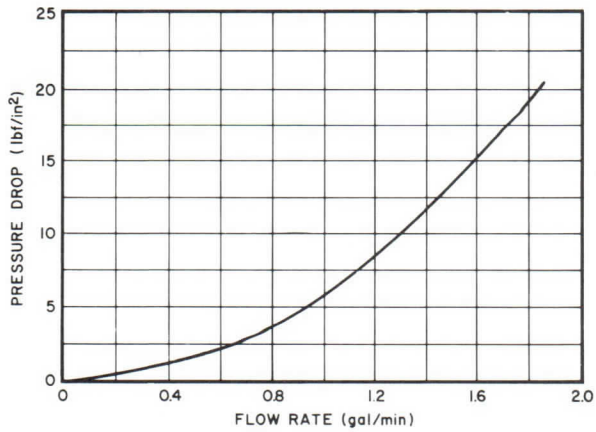

varian

TECHNICAL DATA

C159GA1

DUAL
DIRECTIONAL COUPLER

5.925-6.425 GHz
20 kW CW

DESCRIPTION

The C159GA1 four-port, dual-directional coupler is for use in commercial communications systems. It can handle CW power up to 20 kilowatts in the forward direction. Power can also be channeled to monitoring devices in both the forward and reverse directions. The coupling arms have integral terminations. The C159GA1 has an insertion loss of less than 0.1 dB and directivity of more than 25 dB. The coupler is small in size and is convection and radiation cooled.

GENERAL CHARACTERISTICS [1]

ELECTRICAL

Frequency Range	5.925 to 6.425 GHz
Power, CW	20 kW
Insertion Loss, maximum	0.1 dB
VSWR, primary W/G, maximum	1.07:1
VSWR, Coupled Ports, maximum	1.25:1
Directivity, minimum	25 dB
Coupling	
Forward [2]	60 ± 2 dB
Reverse	40 ± 2 dB

PHYSICAL

Dimensions	See Outline Drawing
Weight, approximate	6 lb/2.7 kg
Mounting Position	Any
Cooling	Convection and Radiation
RF Input and Output Flanges [3]	CPR159F
Coupling Connectors [3]	Type N
Material	Copper Alloy

ENVIRONMENTAL [4]

Temperature	
Operating	-20 to 40 °C
Non-operating and Storage	-40 to 55 °C
Altitude	
Operating	8,000 ft/2.4 km
Non-operating and Storage	50,000 ft/15.0 km

OUTLINE DRAWING

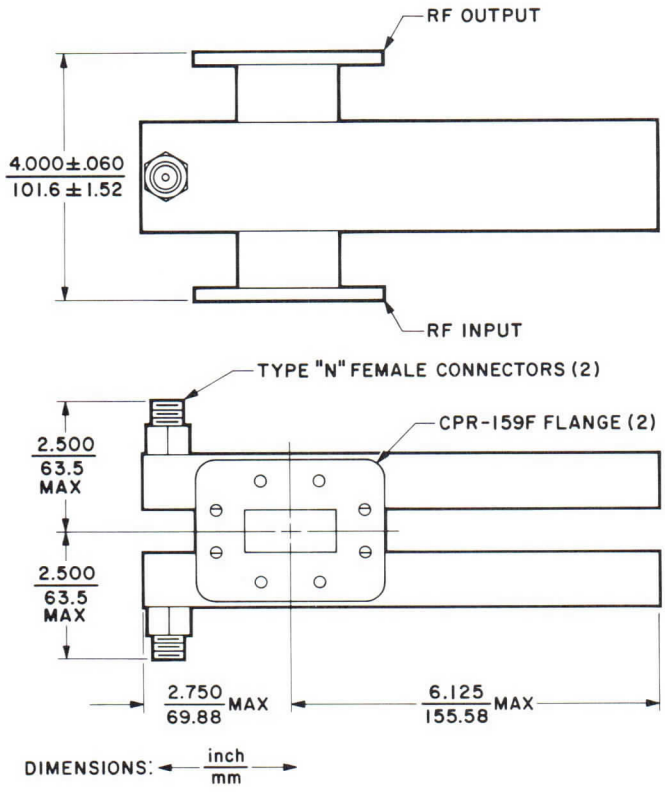

NOTES:

1. Characteristic values are based on performance tests. These figures may change without notice as a result of additional data or product refinement. Contact the Varian Palo Alto Microwave Tube Division, Microwave Components Operation, before using this information for final equipment design.
2. Variation across the frequency band is ±0.2 dB maximum.
3. Other flanges and connectors are available upon special request.
4. For more information on environmental characteristics, contact the Varian Palo Alto Microwave Tube Division, Microwave Components Operation.

3555 6/76

Printed in U.S.A.

C159GA1

varian

TECHNICAL DATA

H159DA3

HIGH POWER ISOLATOR

5.925-6.425 GHz
15 kW

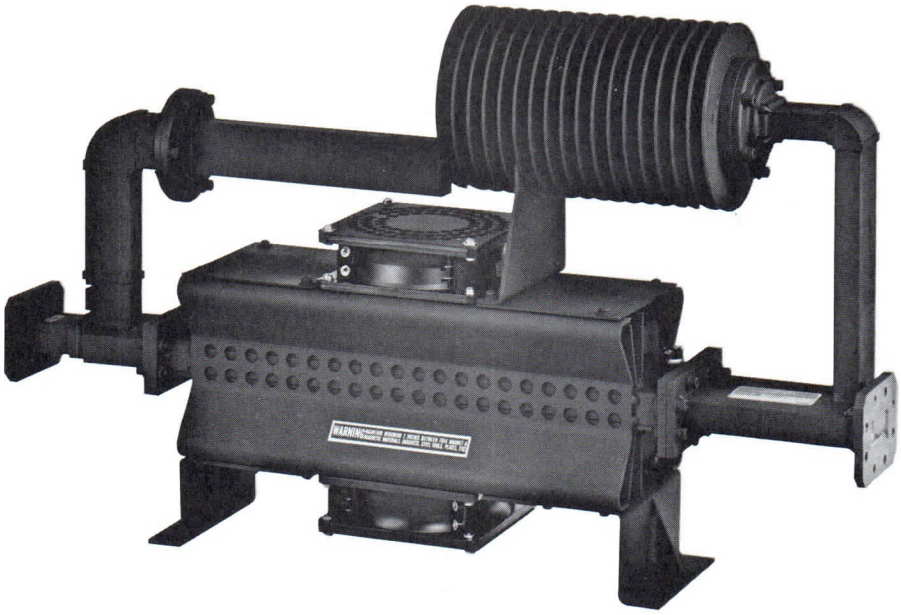

DESCRIPTION

The H159DA3 is a four-port, differential-phase-shift circulator terminated for use as an isolator in commercial satellite-communication systems operating between 5.925 and 6.425 gigahertz. Isolation between transmitter and antenna ports is greater than 23 dB with insertion loss less than 0.25 dB. Type and orientation of waveguide ports can be modified to meet special customer requirements. This device is provided with two integral cooling fans ideal for use in systems requiring high average power without liquid cooling.

GENERAL CHARACTERISTICS [1]

ELECTRICAL

Frequency Range	5.925 to 6.425 GHz
CW Power Handling [2]	15 kW
Isolation, ports 2 to 1, min	23 dB
Insertion Loss, ports 1 to 2, max	0.25 dB
Input VSWR	
Port 1 [3]	1.06:1
Port 2 [4]	1.1:1
Load VSWR, port 2, max	2:1
Cooling Fan Power [5]	
Voltage, 50/60 Hz	115 Vac

PHYSICAL

Dimensions	See Outline Drawing
Weight, approx	30 lb/13.6 kg
Cooling [5]	Forced Air
Ambient Air Temperature, max	50 °C
Altitude, max	10,000 ft/3 km
RF Flanges	CPR-159F
Pressurization Capability [6]	5 lbf/in^{2}g (0.35 kgf/cm^{2}g)
Material	Aluminum

3557 5/76

Printed in U.S.A.

OUTLINE DRAWING

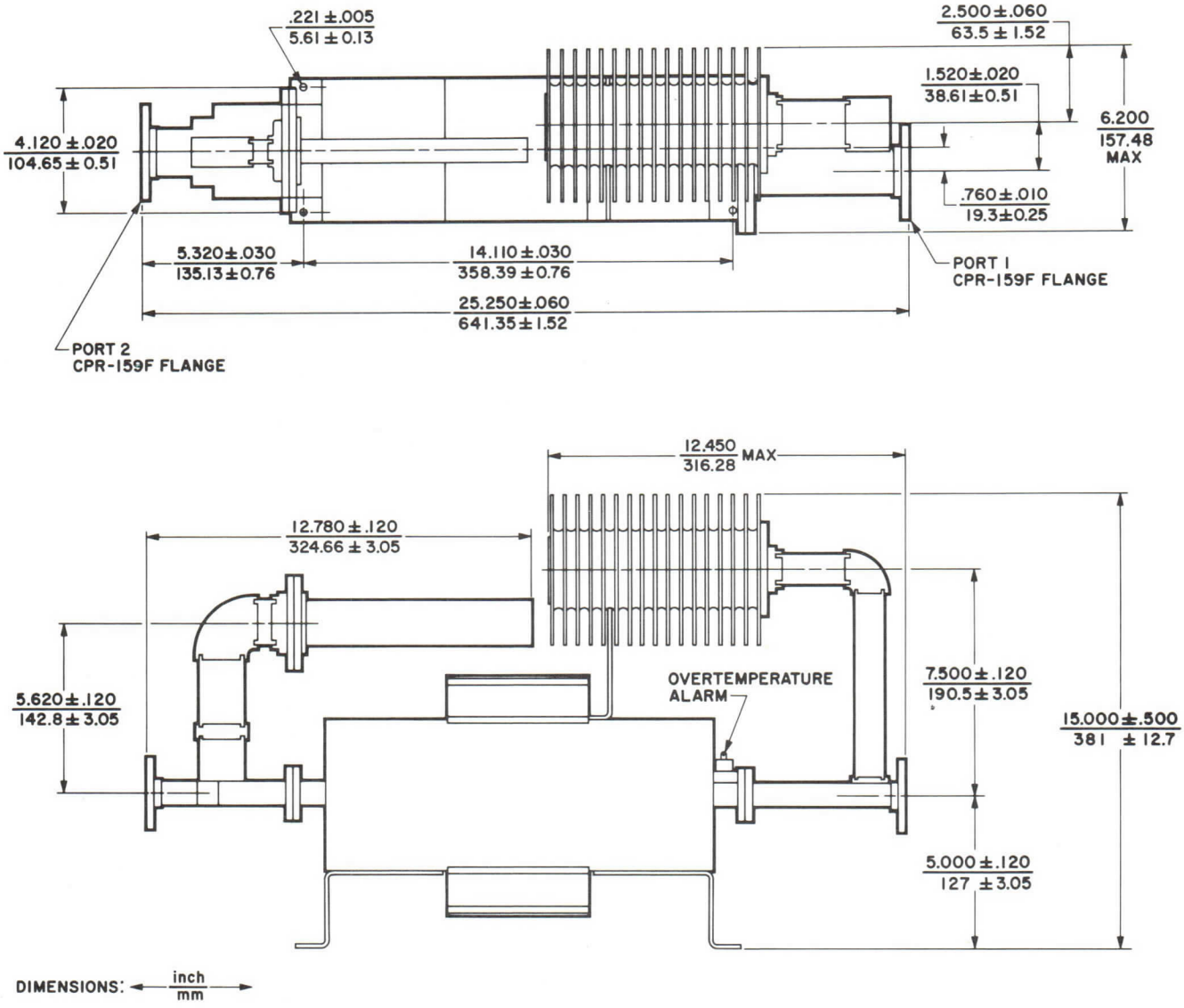

NOTES:

1. Characteristic values are based on performance tests. These figures may change without notice as the result of additional data or product refinement. Contact the Varian Palo Alto Microwave Tube Division before using this information for equipment design.
2. The isolator can handle 18 kW CW. For information on operation at this level, contact the Palo Alto Microwave Tube Division, Microwave Components Operation Marketing.
3. VSWR is with matched termination at port 2.
4. VSWR is with matched termination at port 1.
5. The 2 integral cooling fans are each rated at 19 watts.
6. Although waveguide pressurization above normal atmospheric pressure is not required, the unit can be pressurized up to 5 lbf/in^{2}g (0.35 kgf/cm^{2}g).

varian
palo alto tube division

TECHNICAL DATA

W187BA1

HIGH POWER MICROWAVE WINDOW
5.4-5.9 GHz
5 MW, peak
11 kW, average

DESCRIPTION

The W187BA1 is a broadband, half-wavelength-thick ceramic window. It is ideal for use with WR187 waveguide as a pressure separator or an arc-impeding device in high-power radar systems operating between 5.4 and 5.9 gigahertz. As a pressure separator, it allows pressurization of waveguide sections between the transmitting tube and antenna. Because the ceramic is sealed and hard brazed to the OFHC copper waveguide, this window can be used to separate evacuated sections of waveguide from pressurized sections with only minor flanging changes. As an arc impediment, this window temporarily stops arcs which initiate down the transmission line from the tube. Arcs generally travel from the point of generation toward the power source. Many tube failures result from this phenomenon. By placing a window in the line close to the tube, the required reaction time of arc-protection systems can be extended to several hundreds of milliseconds. This window, which is similar to windows used on Varian high-power microwave tubes, is conservatively rated to handle the specified power.

GENERAL CHARACTERISTICS[1]

ELECTRICAL

Frequency	5.4 to 5.9 GHz
Peak Power Transmission	
Dry Air, at sea level	700 kW
Dry Air, at 30 lbf/in^{2}g	5 MW
SF_6, at 30 lbf/in^{2}g	30 MW
Average Power Transmission	11 kW
VSWR, typical	1.1:1

ENVIRONMENTAL

Operating	
Duty	Continuous
Ambient Temperature	-30 to +70 °C
Relative Humidity, including water and frost condensation	95 %
Non-Operating	
Temperature	-60 to +100 °C
Altitude	No limit
Shock, 50G, 11 ± 1 ms	Per Method 202, MIL-STD-202
Vibration, normal mounting	Per Method 201, MIL-STD-202

PHYSICAL

Dimensions	See Outline Drawing
Weight	3 lb
Mounting Position	Any
Coolant	Water or Ethylene Glycol mixture
Water Flow, minimum	1 gal/min
Pressure Drop, at 1 gal/min	5 lbf/in^2
Static Pressure	125 lbf/in^{2}g
RF Flanges	Mate with UG-149
Finish	Red Copon Epoxy
Material	OFHC Copper, Copper Alloy and AL_2O_3 Ceramic

NOTE:

1. Characteristic values are based on performance tests. These figures may change without notice as a result of additional performance data or product refinement. Contact Varian, Palo Alto Tube Division, Microwave Components Operation before using this information for equipment design.

2401 6/70

Printed in U.S.A.

APPLICATION NOTE

PEAK POWER

The peak power dissipation capability of the W187BA1 depends on the dielectric and gas pressure in the waveguide. The peak power which can be handled using dry air, dry nitrogen, or sulphur hexafluoride to pressurize the waveguide is shown in "Relative Power Characteristics". Peak power is related to the dissipation rating for dry air at atmospheric pressure and sea level as unity.

CHARACTERISTIC CURVES

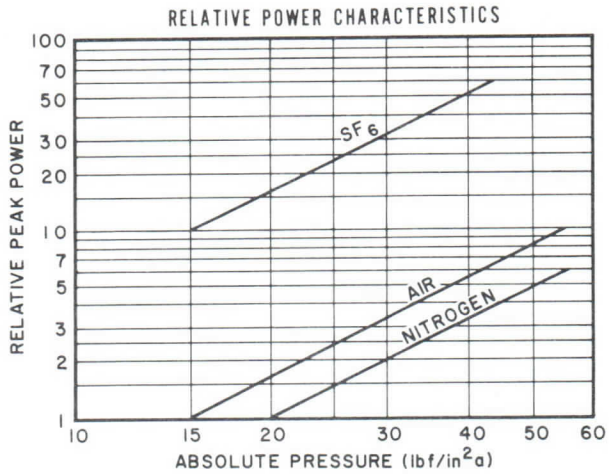

OUTLINE DRAWING

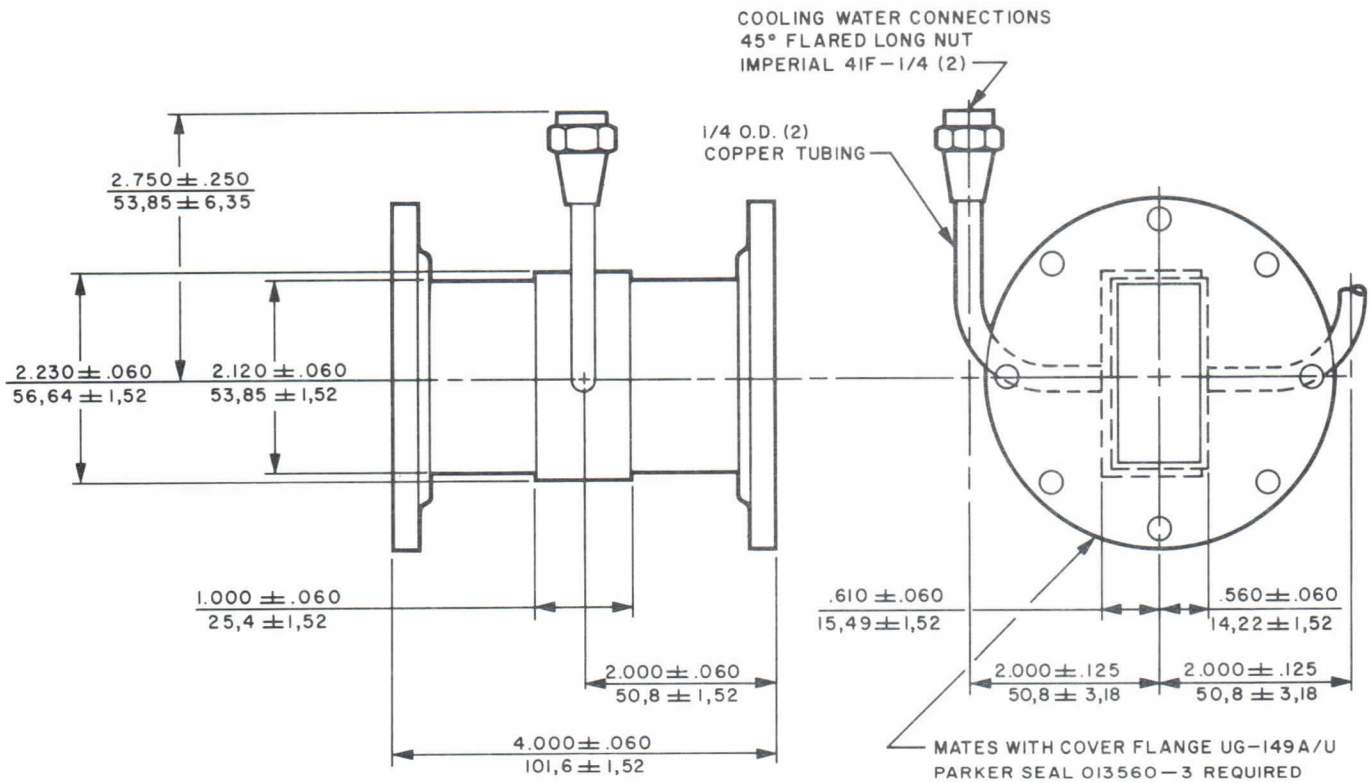

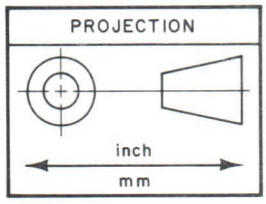

varian
palo alto tube division

TECHNICAL DATA

H284DA1

HIGH POWER CIRCULATOR

2.9-3.1 GHz

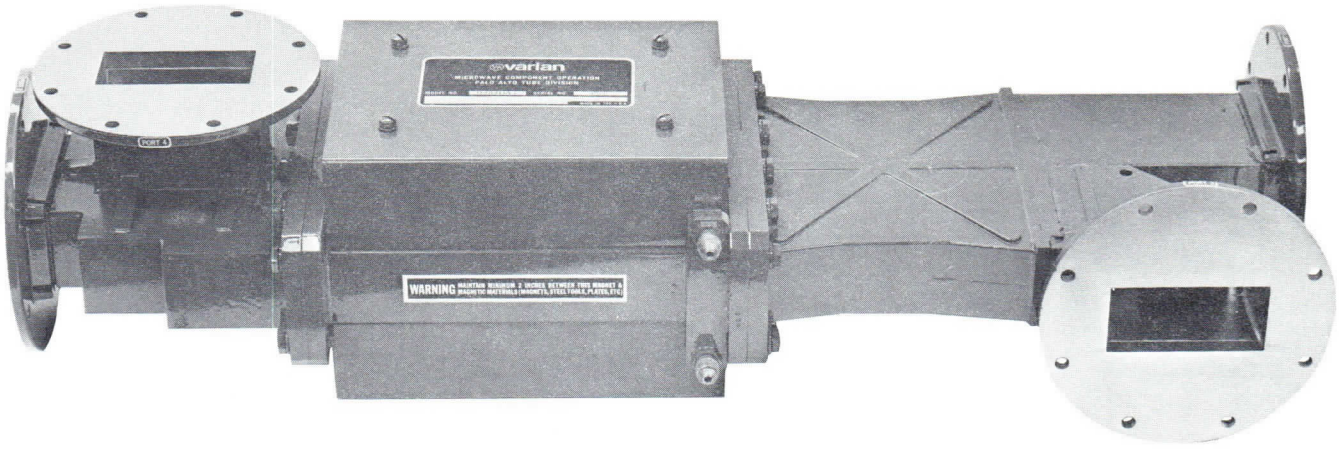

DESCRIPTION

The H284DA1 is a liquid-cooled, four-port, differential-phase-shift circulator for use as a duplexer or isolator in high-power radar systems operating between 2.9 and 3.1 gigahertz. As a duplexer, with a load at Port 4, isolation between transmitter and antenna ports is greater than 20 dB; insertion loss is less than 0.4 dB. With loads at Ports 3 and 4, this circulator can be used as a high-power isolator with the same electrical performance. The H284DA1 can handle up to 6 kilowatts of average power and up to 1.5 megawatts of peak power under maximum load VSWR conditions. Type and orientation of waveguide ports can be modified to meet special customer requirements.

GENERAL CHARACTERISTICS[1]

ELECTRICAL

Frequency Range	2.9 to 3.1 GHz
Power Handling Capacity	
Average	6 kW
Peak	1.5 MW
Isolation, minimum	20 dB
Insertion Loss, maximum	0.4 dB
Input VSWR, maximum	1.15:1
Load VSWR, maximum	2.0:1

PHYSICAL

Dimensions	See Outline Drawing
Weight	45 lb
Mounting Position	Any
Cooling[2]	Liquid
Water Flow	0.5 gal/min
Waveguide Pressurization[3]	10 lbf/in^{2}g
R-F Flanges	See Outline Drawing
Standard Finish[4]	Red Copon Epoxy
Material	Copper Alloy

NOTES:

1. Characteristic values are based upon performance tests. These figures may change without notice as a result of additional data or product refinement. Contact Varian Palo Alto Tube Division, Microwave Components Operation before using this information for equipment design.
2. Distilled water is the preferred coolant. For information on the use of other types of coolants, contact the nearest Varian Sales Office.
3. The waveguide may be pressurized up to a maximum gauge pressure of 30 pound-force per square inch.
4. Other finishes are available upon request.

2332 5/70

Printed in U.S.A.

OUTLINE DRAWING

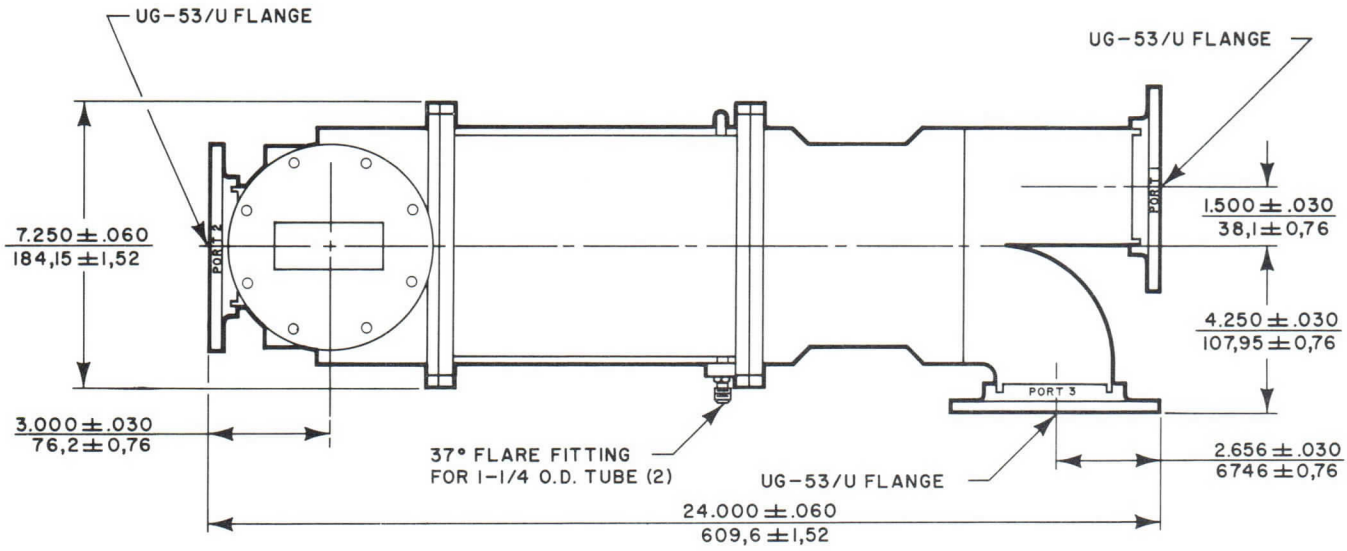

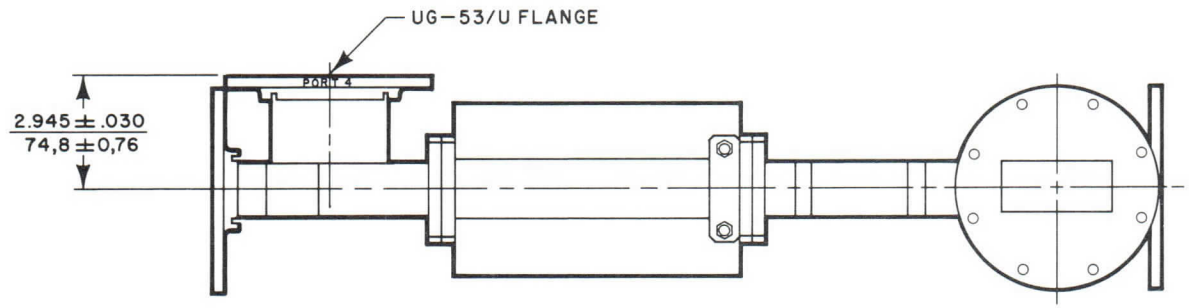

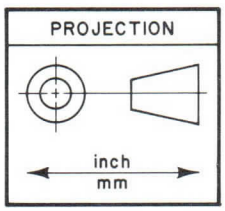

varian

TECHNICAL DATA

H284DA6

HIGH POWER CIRCULATOR

2.7-2.9 GHz

DESCRIPTION

The H284DA6 is a four-port, differential-phase-shift circulator for use as a duplexer or isolator in high-power radar systems operating between 2.7 and 2.9 gigahertz. As a duplexer, isolation between transmitter and antenna ports is greater than 22 dB; insertion loss is less than 0.4 dB. With loads at Ports 3 and 4, this circulator can be used as a high-power isolator with the same electrical performance. The H284DA6 can handle up to 2.5 kilowatts of average power and up to 1.25 megawatts of peak power under maximum load VSWR conditions. Type and orientation of waveguide ports can be modified to meet special customer requirements. The circulator is cooled by convection and radiation.

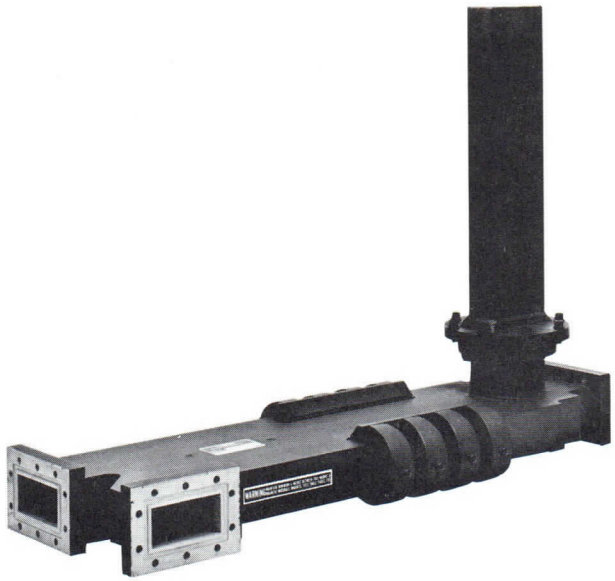

GENERAL CHARACTERISTICS [1]

ELECTRICAL

Frequency Range	2.7 to 2.9 GHz
Power Handling Capacity	
Average	2.5 kW
Peak	1.25 MW
Isolation, minimum	
Ports 2 to 1	22 dB
Insertion Loss, Ports 1 to 2, max	0.4 dB
Input VSWR, maximum	1.15:1
Load VSWR, Port 2, maximum	1.5:1

PHYSICAL

Dimensions	See Outline Drawing
Weight, approximate	30 lb/13.6 kg
Mounting Position	Any
Cooling	Convection and Radiation
Ambient Air Temperature	-10 to 55 °C
Waveguide Pressurization, dry air	1 atm
Elevation	10,000 ft/3 km
R-F Flanges	See Outline Drawing
Standard Finish[2]	Varian Red
Material	Aluminum

NOTES:

1. Characteristic values are based on performance tests. These figures may change without notice as a result of additional data or product refinement. Contact Varian Palo Alto Microwave Tube Division, Microwave Components Operation before using this information for equipment design.
2. Other finishes are available upon request.

3560 5/76

Printed in U.S.A.

SCHEMATIC OF FERRITE CIRCULATOR WITH OTHER COMPONENTS

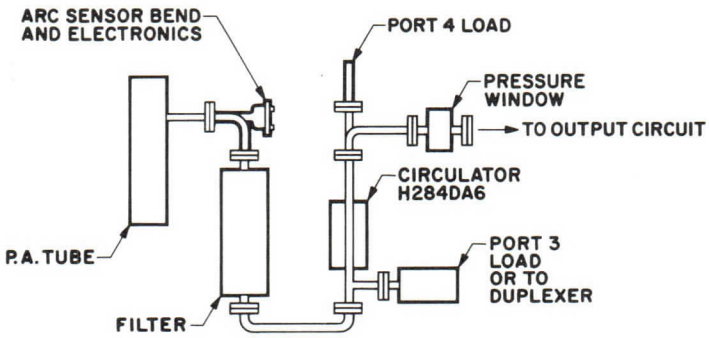

OUTLINE DRAWING

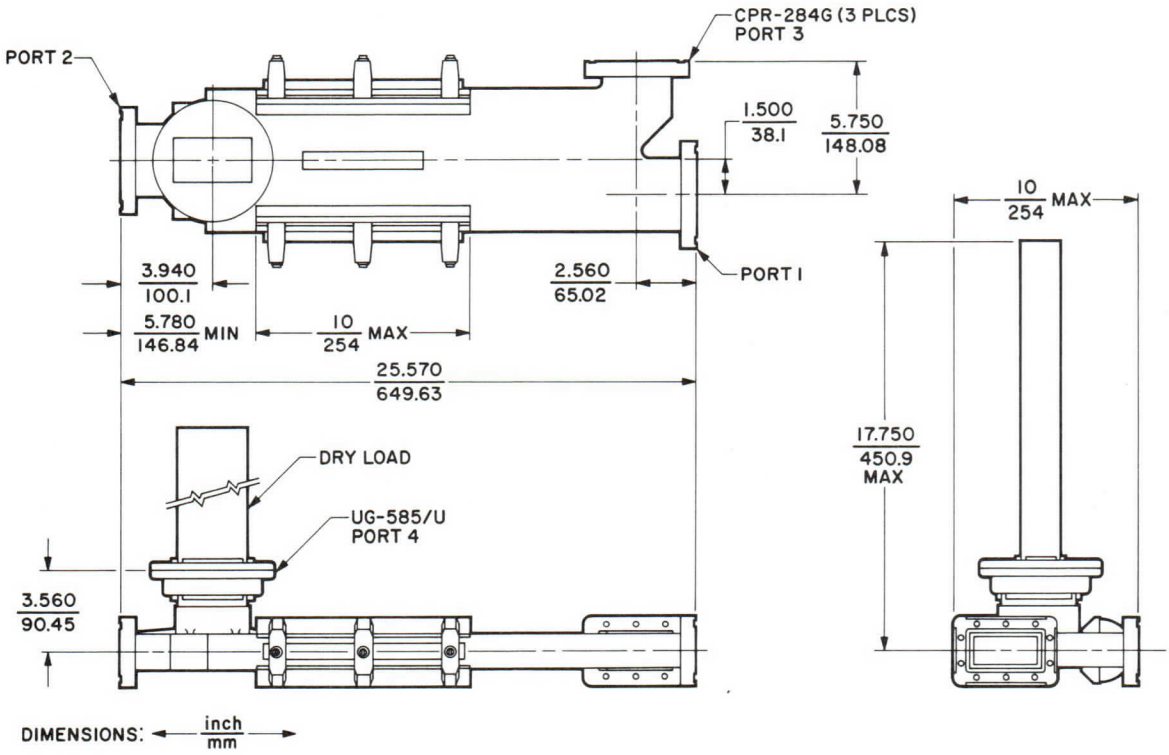

varian
palo alto tube division

TECHNICAL DATA

W284BC2

HIGH POWER MICROWAVE WINDOW

2.81 - 2.91 GHz

30 MW, peak

18 kW, average

DESCRIPTION

The W284BC2 is a half-wavelength-thick ceramic window. It has ideal characteristics for use in high-power systems operating between 2.81 and 2.91 gigahertz, such as linear accelerators which require pressurization on one side and a vacuum on the other. The vacuum flanges are specially designed for high-vacuum systems and are used with a preformed copper gasket. A reinforced waveguide handles the high pressures that would be required on the amplifier side of the window. The aluminum-oxide window is similar to windows used on Varian high power microwave tubes and is conservatively rated to handle the specified power.

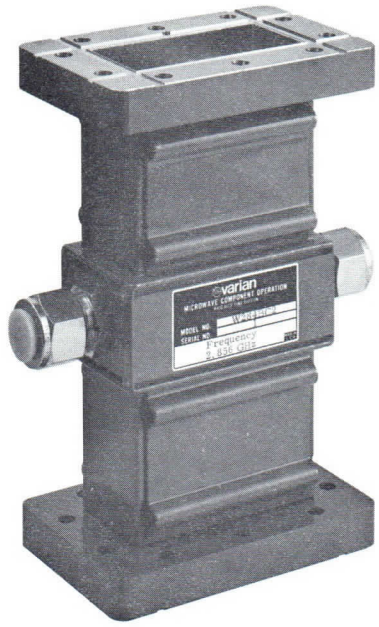

GENERAL CHARACTERISTICS[1]

ELECTRICAL

Frequency	2.81 to 2.91 GHz
Peak Power Transmission	
Dry Air, at sea level	1 MW
Dry Air, at 30 lbf/in^2g	6 MW
SF_6, at 30 lbf/in^2g	30 MW
Average Power Transmission	18 kW
VSWR,[2] typical	1.10:1

PHYSICAL

Dimensions	See Outline Drawing
Weight	8 lb
Mounting Position	Any
Coolant	Water or Ethylene Glycol Mixture
Water Flow, minimum	1 gal/min
Pressure Drop, at 1 gal/min	5 lbf/in^2
Static Pressure	125 lbf/in^2g
Paint	Red Copon Epoxy
Material	OFHC Copper, Al_2O_3 Ceramic, and Copper Alloy

ENVIRONMENTAL

Operating	
Duty	Continuous
Ambient Temperature	-30 to +70 °C
Relative Humidity, including water and frost condensation	95 %
Non-Operating	
Temperature	-60 to +100 °C
Altitude	No limit
Shock, 50G, 11 ± 1 ms	Per Method 202, MIL-STD-202
Vibration, normal mounting	Per Method 201, MIL-STD-202

2403 6/70

Printed in U.S.A.

APPLICATION NOTES

PEAK POWER

The peak power dissipation capability of the W284BC2 depends on the dielectric and gas pressure in the waveguide. The peak power which can be handled, using dry air, dry nitrogen, or sulphur hexafluoride to pressurize the waveguide is shown in "Relative Power Characteristics". Peak power is related to the dissipation rating for dry air at atmospheric pressure and sea level as unity.

NOTES:

1. Characteristic values are based on performance tests. These figures may change without notice as a result of additional performance data or product refinement. Contact Varian Palo Alto Tube Division, Microwave Components Operation before using this information for equipment design.
2. In linear accelerator applications at 2.856 GHz, the maximum allowable VSWR is 1.05:1.

CHARACTERISTIC CURVE

Typical performance values

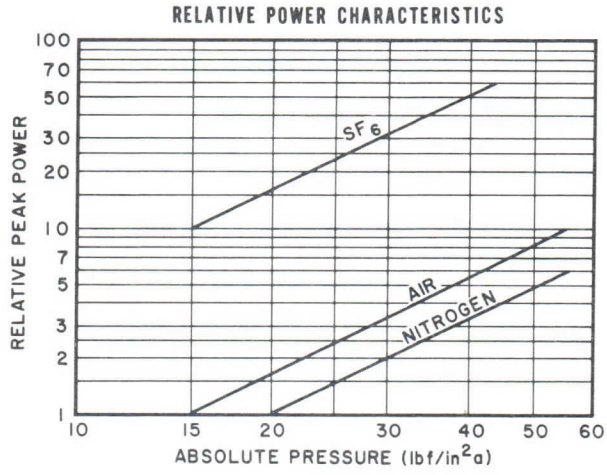

OUTLINE DRAWING

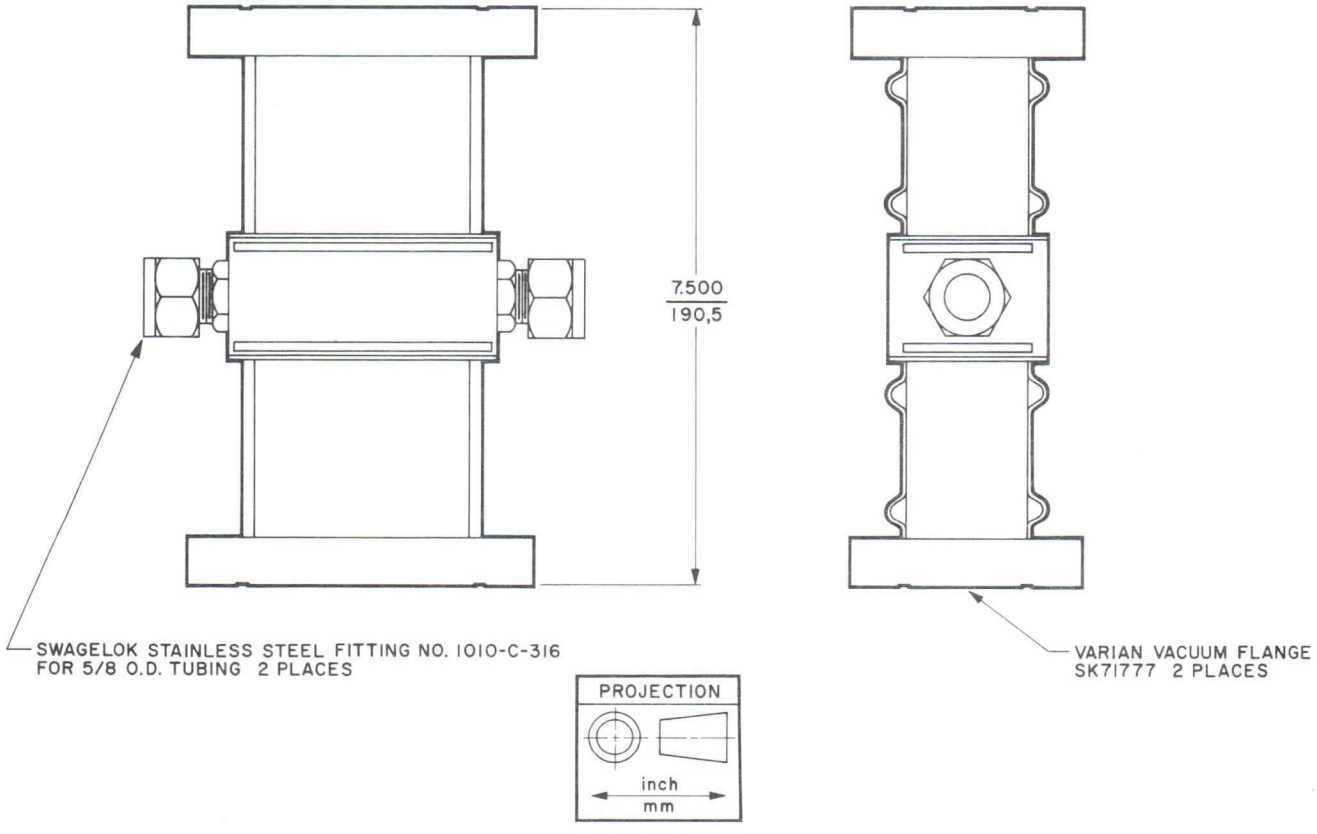

varian
palo alto tube division

TECHNICAL DATA

H430DA4

HIGH POWER ISOLATOR

1.75-1.85 GHz
14 kW CW

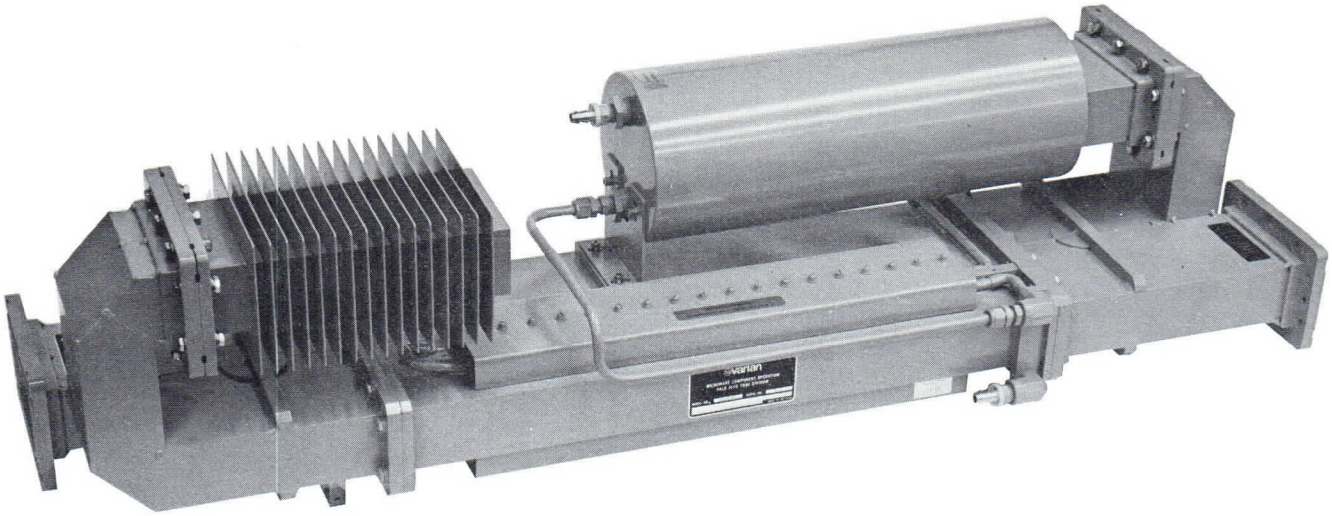

DESCRIPTION

The H430DA4 is a four-port, differential-phase-shift circulator for use as an isolator in high-power CW troposcatter communication systems operating between 1.75 and 1.85 gigahertz. With loads at Ports 3 and 4, isolation between the transmitter and antenna ports is greater than 20 dB; insertion loss is less than 0.3 dB. Type and orientation of waveguide ports can be modified to meet special customer requirements. This device requires liquid cooling, using either water or an ethylene glycol/water mixture.

GENERAL CHARACTERISTICS[1]

ELECTRICAL

Frequency Range	1.75 to 1.85 GHz
Power Handling Capacity	14 kW
Isolation, minimum	20 dB
Insertion Loss, maximum	0.3 dB
Input VSWR, maximum	1.2:1
Load VSWR, maximum	3.5:1

PHYSICAL

Dimensions	See Outline Drawing
Weight, approx	90 lb
Mounting Position[2]	Horizontal
Cooling[3]	Liquid
Ethylene Glycol/water	2 gal/min
Pressure Drop, at 2 gal/min	15 lbf/in^2
Waveguide Pressurization[4], max	5 lbf/in^{2}g
R-F Flanges	See Outline Drawing
Standard Finish[5]	Red Copon Epoxy
Material	Aluminum and Copper Alloy

NOTES:

1. Characteristic values are based upon performance tests. These figures may change without notice as a result of additional data or product refinement. Contact Varian Palo Alto Tube Division, Microwave Components Operation before using this information for equipment design.
2. Unit can be designed to operate in any other position.
3. If more cooling information is desired, contact the nearest Varian Sales Office.
4. Although waveguide pressurization above normal atmospheric pressure is not required, the unit may be subjected to gauge pressures up to 5 pound-force per square inch.
5. Other finishes are available on special order.

2333 5/70

Printed in U.S.A.

OUTLINE DRAWING

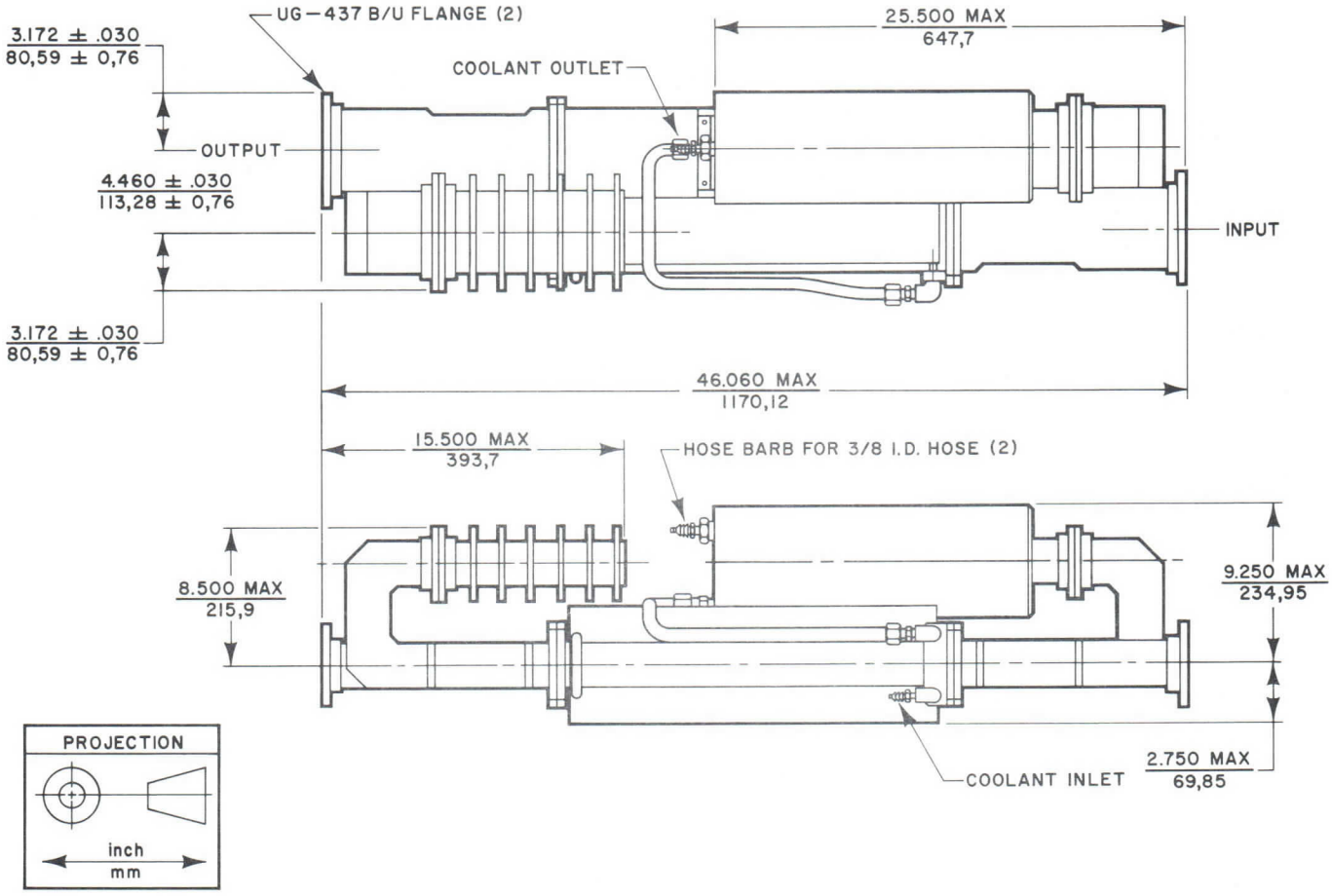

varian
electron tube and device group

TECHNICAL DATA

H650YA1

HIGH POWER CIRCULATOR

1.25-1.35 GHz

600 W AVERAGE
600 kW PEAK

DESCRIPTION

The H650YA1 is a three-port, Y-junction circulator for use in high-power L-band radar systems operating between 1.25 and 1.35 gigahertz. It can handle up to 600 watts of average power and 600 kilowatts of peak power. Isolation is greater than 20 dB and insertion loss is less than 0.3 dB. When port 3 is terminated, the circulator can be used as an isolator. It also operates under short circuit load conditions but waveguide pressurization with SF_6 gas is required, the amount of pressurization depending upon the combined forward and reflected power. This unit is convection and conduction cooled and is ideal for equipment that does not require a cooling system.

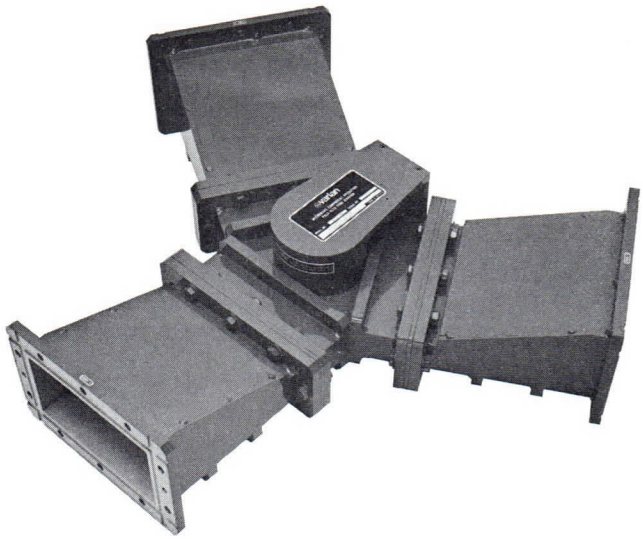

GENERAL CHARACTERISTICS[1]

ELECTRICAL

Frequency Range	1.25 to 1.35 GHz
Power Handling Capability, peak	600 kW
Power Handling Capability, average	600 W
Isolation, minimum	20 dB
Insertion Loss, maximum	0.3 dB
Load VSWR, maximum	Short Circuit
Input VSWR, maximum	1.2:1

PHYSICAL

Dimensions	See Outline Drawing
Weight	52 lb
Cooling	Convection and Conduction
Waveguide Pressurization[2]	30 lbf/in²g
RF Flanges	Mate with UG-418B/U
Standard Finish[3]	Red Copon Epoxy
Material	Aluminum

OUTLINE DRAWING

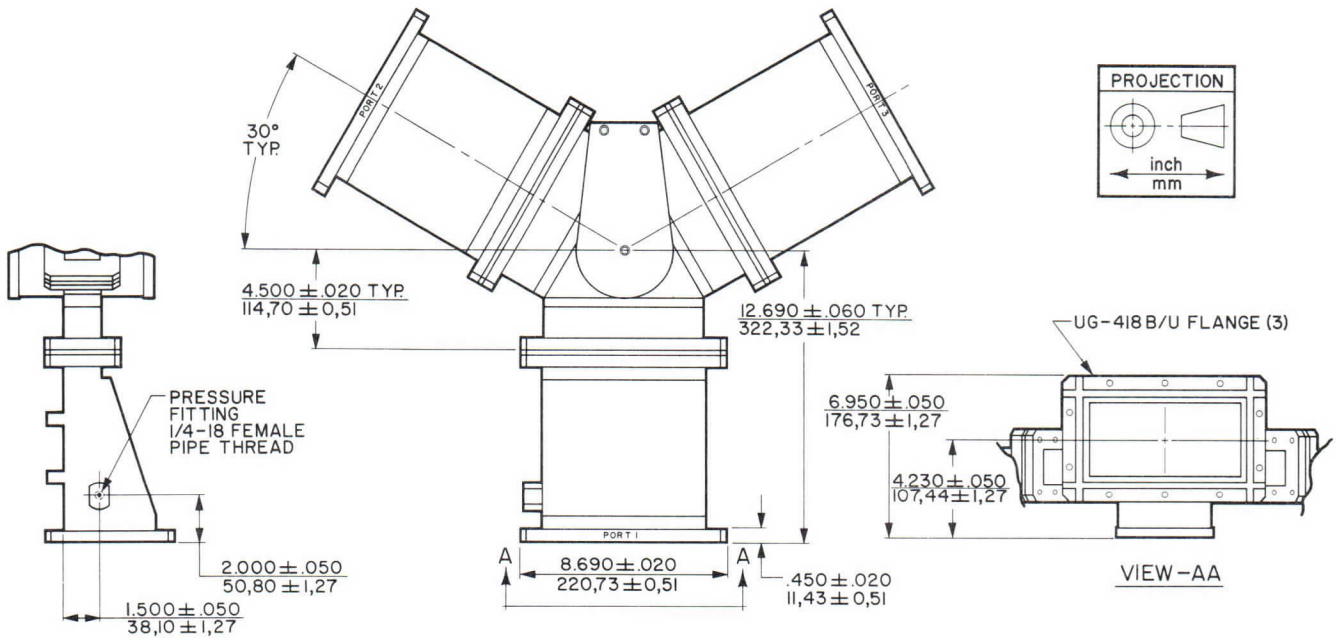

2271 1/70

Printed in U.S.A.

NOTES:

1. Characteristic values are based on performance tests. These figures may change without notice as a result of additional data or product refinement. Contact Varian Palo Alto Tube Division before using this information for equipment design.
2. Waveguide pressurization is not normally required unless the unit is operated with a short-circuit load.
3. Other finishes are available upon special request.

varian

TECHNICAL DATA

W975AA3

HIGH POWER MICROWAVE WINDOW
755-825 MHz
100 MW, peak
150 kW, average

DESCRIPTION

The W975AA3 is a liquid-cooled, disc-type ceramic window. It is ideal for use in very high-power systems operating between 755 and 825 megahertz and where pressure separation is required in the output waveguide system. It will handle a vacuum on one side and pressurzation on the other if required for use in linear accelerators. The W975AA3 utilizes beryllium-oxide ceramic that assures low heating effects across the ceramic face. This window, which is similar to windows used on Varian high-power microwave tubes, is conservatively rated to handle the specified power.

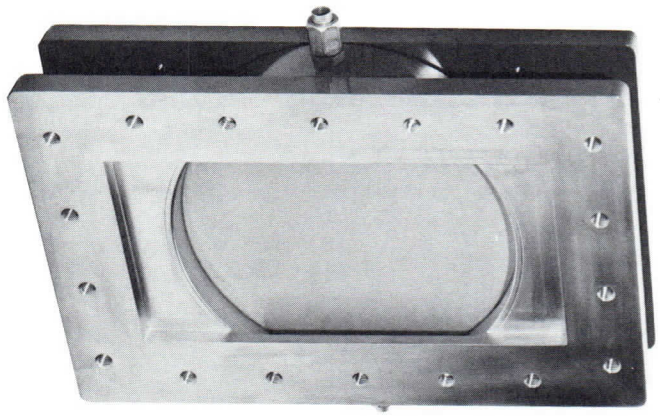

GENERAL CHARACTERISTICS[1]

ELECTRICAL

Frequency Range	755 to 825 MHz
Peak Power Transmission[2]	100 MW
CW Power Transmission	150 kW
VSWR, maximum	1.1:1

ENVIRONMENTAL[3]

Temperature	
Operating	-25 to 200 °F
Nonoperating and Storage	-40 to 250 °F
Altitude, maximum	
Operating	8,000 ft/2.4 km
Nonoperating and storage	35,000 ft/9.5 km

PHYSICAL

Dimensions	See Outline Drawing
Weight, approximate	33 lb/15 kg
Mounting Position	Any
Coolant	Water or Ethylene Glycol Mixture
Water Flow, min	1 gal/min(0.06 l/s)
Pressure Drop, at 1 gal/min	5 lbf/in^2 (0.35 kgf/cm^2)
Static Pressure	125 lbf/in^{2}g (8.75 kgf/cm^{2}g)
RF Flanges	Mate with modified CPR-975F
Material, window	Beryllium-Oxide Ceramic
Material, flange	Stainless Steel

NOTES:

1. Characteristic values are based on performance tests. These figures may change without notice as a result of additional performance data or product refinement. Contact Varian Palo Alto Microwave Tube Division, Microwave Components Operation, before using this information for equipment design.
2. Pressurization of 30 lbf/in^{2}g(2.1 kgf/cm^{2}g) with dry air is required at this power level.
3. For more information on environmental characteristics, contact the Varian Palo Alto Microwave Tube Division.

3649 2/77

Printed in U.S.A.

OUTLINE DRAWING

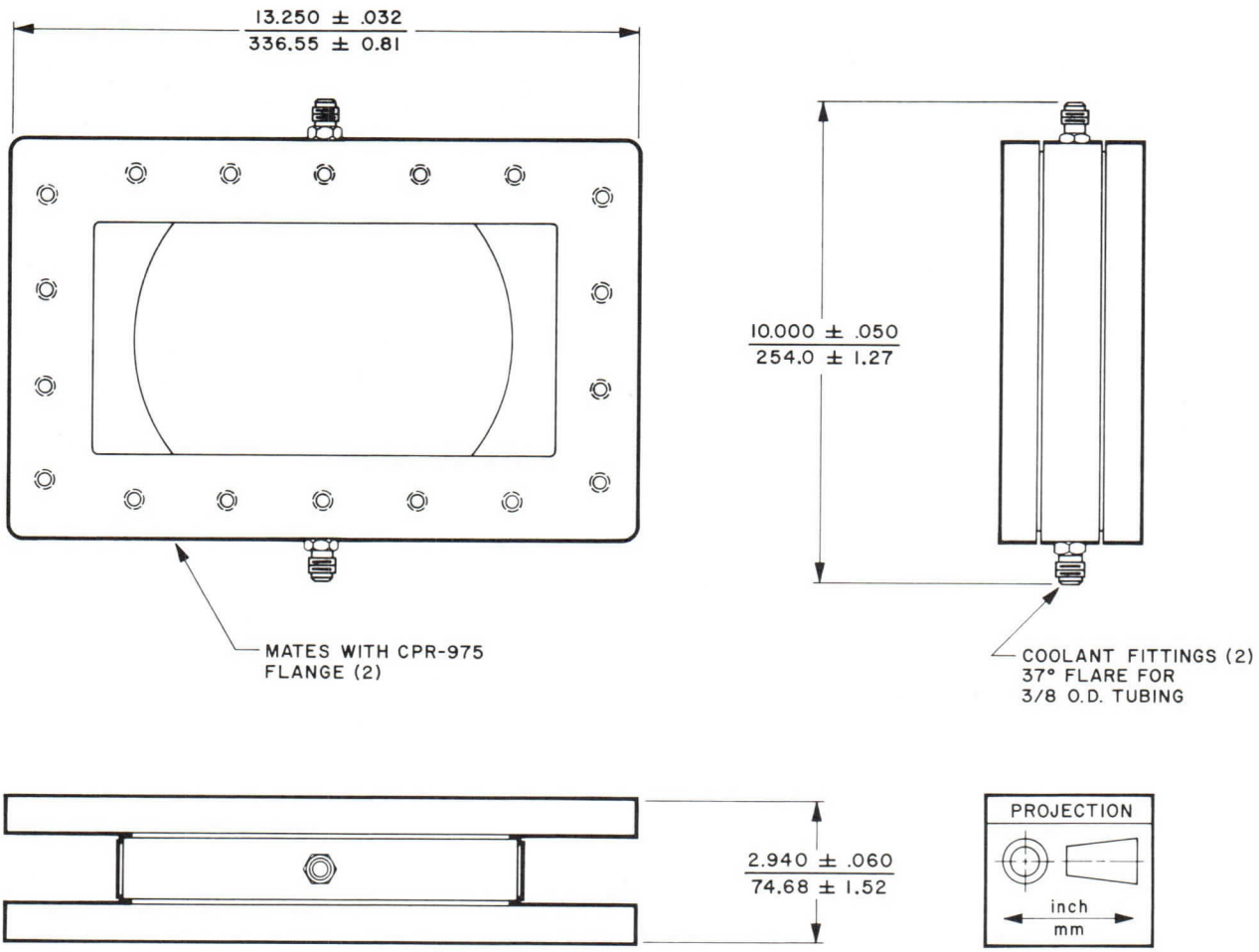

OPERATING HAZARDS

Read the following and take all necessary precautions to protect personnel. Safe operating conditions are the responsibility of the equipment designer and the user.

Beryllium-Oxide Ceramics. This component contains Beryllium-Oxide Ceramics. BERYLLIUM-OXIDE DUST AND FUMES ARE HIGHLY TOXIC AND BREATHING THEM CAN RESULT IN SERIOUS PERSONAL INJURY OR DEATH. Never perform any operation on the ceramic parts of this component which might produce dust or fumes, such as grinding, grit blasting and acid cleaning.

Procedures should be established and enforced to fully safeguard all personnel from these hazards. Labels and caution notices must be provided on equipment and in manuals clearly warning of these hazards.

varian
palo alto tube division

TECHNICAL DATA

W975AA1

HIGH POWER MICROWAVE WINDOW
755-825 MHz
100 MW, peak
150 kW, average

DESCRIPTION

The W975AA1 is a liquid-cooled, disc-type ceramic window. It is ideal for use in very high-power systems operating between 755 and 825 megahertz and where pressure separation is required in the output waveguide system. It will handle a vacuum on one side and pressurization on the other if required for use in linear accelerators. The W975AA1 utilizes beryllium-oxide ceramic that assures low heating effects across the ceramic face. This window, which is similar to windows used on Varian high-power microwave tubes, is conservatively rated to handle the specified power.

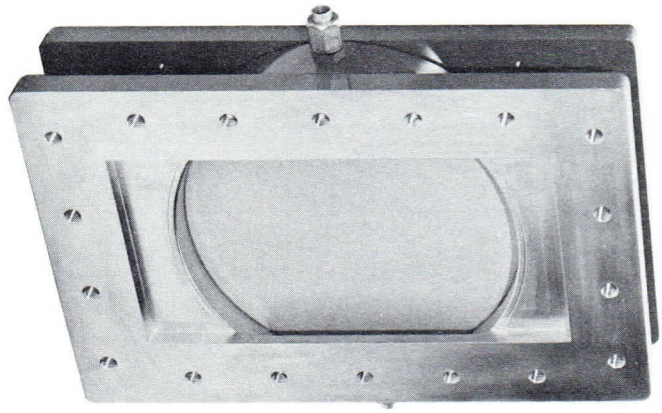

GENERAL CHARACTERISTICS[1]

ELECTRICAL

Frequency Range	755 to 825 MHz
Peak Power Transmission[2]	100 MW
CW Power Transmission	150 kW
VSWR, typical	1.1:1

ENVIRONMENTAL[3]

Temperature	
Operating	-25 to 200 °F
Nonoperating and Storage	-40 to 250 °F
Altitude, maximum	
Operating	8,000 ft
Nonoperating and Storage	35,000 ft

PHYSICAL

Dimensions	See Outline Drawing
Weight, approximate	31 lb
Mounting Position	Any
Coolant	Water or Ethylene Glycol Mixture
Water Flow	1 gal/min
Pressure Drop, at 1 gal/min	5 lbf/in^2
Static Pressure	125 lbf/in^2g
RF Flanges	Mate with modified CPR-975F
Finish	Red Copon Epoxy
Material, window	Beryllium-Oxide Ceramic

NOTES:

1. Characteristic values are based on performance tests. These figures may change without notice as a result of additional performance data or product refinement. Contact Varian Palo Alto Tube Division, Microwave Components Operation, before using this information for equipment design.
2. Pressurization of 30 lbf/in^2g with dry air is required at this power level.
3. For more information on environmental characteristics, contact the Varian Palo Alto Tube Division.
4. Other finishes available at customer request.

2402 6/70

Printed in U.S.A.

OUTLINE DRAWING

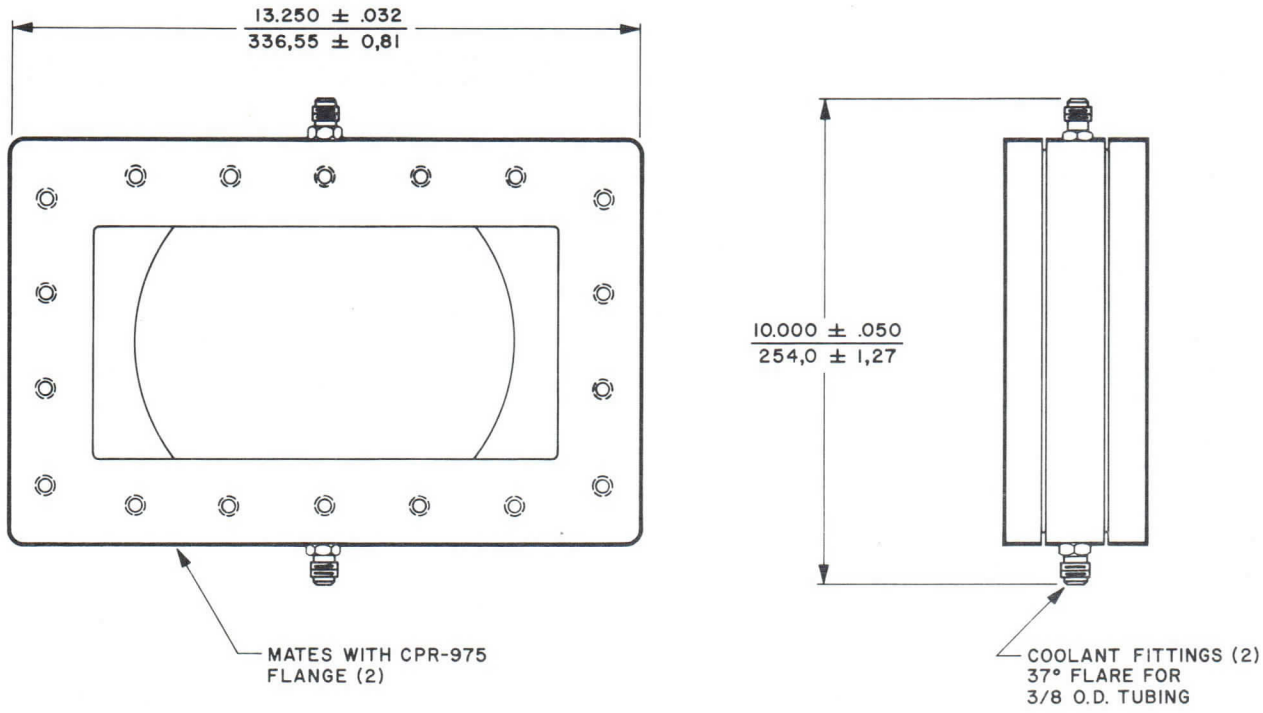

varian
palo alto tube division

TECHNICAL DATA

VE( )-8410
Series

ARC SENSOR

2.6-18.0 GHz
30-40 GHz

DESCRIPTION

The VE( )-8410 arc sensor is a solid-state optical device for detecting visible arcs and excessive reflected power in high-power microwave systems. The sensing portion is an integral part of a 90° waveguide bend. The arc sensor mounts between the microwave tube output flange and the waveguide transmission line. Models can be supplied to cover all the standard waveguide bands between 2.6 and 18.0 gigahertz and from 30.0 to 40.0 gigahertz. When ordering, specify the frequency band desired by inserting the third prefix letter as shown in the table below. This arc sensor can be adapted to other waveguide configurations on special order.

This compact, rugged component responds to visible arcs which may occur adjacent to the microwave tube window and, with appropriate external circuitry, can actuate a suitable switching arrangement, such as a diode switch, crowbar, etc. In addition, it can detect excessive reflected power, by amplifying a signal voltage from a directional coupler in the output transmission line and supplying this amplified voltage to an external protective circuit.

Its reaction time is 5 microseconds or less,

which is more than adequate for most high-power systems. Only a 28-volt, 85-milliampere, d-c supply is needed, however, other supplies may be used with proper series resistors. Each unit includes fail-safe circuitry which protects the microwave tube if either of the two cables is disconnected.

FEATURES

- Senses visible areas and high reflected power.
- Meets requirements of MIL-E-5400, Class II, environmental specification.
- Fail-safe if cables are disconnected.
- Temperature compensated over the range -54°C to +90°C.
- Includes a built-in test lamp to check response of arc-sensing circuitry.

GENERAL CHARACTERISTICS

Operating Frequency (GHz)	Waveguide Type	Mating Flanges	Flange to Flange Radius, r See Outline Drawing (in/mm)*	Type Number
2.60-3.95	WR284	UG-53/U	4.4/111.76	VES-8410
3.95-5.85	WR187	UG-149A/U	4.0/101.6	VEC-8410
5.85-8.20	WR137	UG-344/U	3.0/76.2	VEJ-8410
7.05-10.00	WR112	UG-51/U	2.5/63.5	VEH-8410
8.20-12.40	WR90	UG-39/U	2.0/50.8	VEX-8410
12.40-18.00	WR62	UG-419/U	2.0/50.8	VEU-8410
30.00-40.00	WR28	UG-599/U	1.19/30.2	VEA-8410[4]

2850 9/72

Printed in U.S.A.

GENERAL CHARACTERISTICS[1]

ELECTRICAL

Input Voltage, nominal .....+28 Vdc
Input Current, nominal ..... 85 mAdc
Output Signal
  Voltage, approximate ..... 2 - 16 Vdc
  Source Impedance ..... 1300 Ω
Response Time, maximum ..... 5 μs
Reflected Power[2],
  Jack Input Impedance ..... 470 kΩ

PHYSICAL

Connectors
  Reflected Power ..... OSM 212
  Input Power, Fault Signal Output,
    Test Light, and Back-power
    Test ..... Burndy BTO7A-10-6P Bantam

ENVIRONMENTAL

Operating ..... Meets MIL-E-5400, Class II Specification
Temperature Range, ambient ...-54°C to +90°C

APPLICATION NOTES

The following design considerations and operating instructions point out essential external circuit elements that should be provided by the user to assure optimum arc-sensor performance. Failure to provide these elements with the proper polarity, may produce disastrous results, not only to the arc sensor but also to the microwave tube it is intended to protect.

The sketch below shows the relative locations of the various arc-sensor terminals.

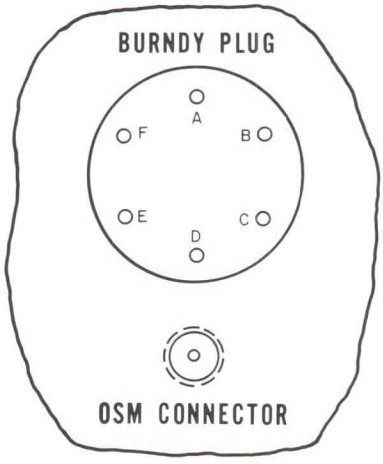

INPUT POWER

The Varian arc sensor is designed to operate with an input power of 28 Vdc at 85 mA. It operates satisfactorily with the input voltage varying from 19 V to 30 V. If the 28 Vdc is obtained from a higher d-c voltage line, Table A shows the correct series resistor to use. Power rating of resistors is 10 watts.

Table A

Positive Supply Voltage (V)	External Supply Resistor (Ω)
28	0
50	310
75	670
100	1000

Pins A and B of the Burndy Bantam plug are the input power connections. Pin B is the chassis ground terminal. Make sure polarity is correct. A mating socket for this connector is furnished with each unit. All wires to this socket should be shielded.

OUTPUT SIGNAL

In the presence of adequate light, such as a waveguide arc, or a d-c signal from the reflected power input, an SCR is "fired" and an output voltage of up to 2 V will be present on Pin F of the power plug. With no light present and without a d-c voltage from the reflected power input, the output voltage will be at least 16 V. The source impedance of the output circuit is 1300 Ω. Usually, the output signal is fed to additional control circuits supplied by the customer. The extent of this control circuitry is determined from system design considerations. (Varian can furnish a power supply and control unit for use with the arc sensor on special order.) Basically, the output of the sensor is the voltage from an SCR. It operates at two different levels; in the armed condition, the voltage is approximately 16 V while in the fired condition the voltage is less than 2 V.

REFLECTED POWER INPUT

A miniature OSM 212 female connector is provided to permit monitoring of the detected voltage from the back-power coupler. A fault signal is produced when the d-c input is greater than a preset level. The factory preset level to produce a fault signal is 125 mV at the OSM 212 connector. The input to the OSM connector for any fault condition must be positive.

The sensor cannot be "armed" for operation and also provide fail-safe performance unless the back power line is properly terminated.

For proper operation, the crystal must be shunted by a resistor equal to its video impedance. This value is typically 370 to 470 ohms for most crystals.

TEST LAMP

A test lamp is incorporated in the sensor to determine the visual response of the unit. An actuating push-button switch connected between Pins B and C must be provided by the customer.

Shorting Pin C to Pin B will simulate a fault condition, and thereby indicate whether or not the visual circuitry is operating satisfactorily.

BACK POWER CIRCUIT TEST

Shorting Pin E to Pin B, will simulate a fault condition. This will indicate whether or not the back-power circuit is operating satisfactorily.

EXTERNAL CIRCUIT REQUIREMENTS

Output Signal

Intermediate circuitry, as required by the application, is necessary to activate the switching arrangement.

Both fault indicator light and reset switch are desirable to obtain optimum system performance. The reset switch should be a simple normally-open push-button type that shorts Pins F to B and "rearms" the circuit. A resistor may be required in series with Pin F to limit the rate of rise of the voltage between Pins F and B on the arc sensor. This rate of rise should not exceed 20 volts per microsecond.

Back Power Test [3]

A push button to short Pin E to Pin B is needed for testing the back-power circuit.

Test Lamp [3]

A push button that shorts Pin C to Pin B is required for testing the visual responses of the sensor.

NOTES:

1. Characteristic values are based on performance tests. These figures may be changed without notice as a result of additional data or product refinement. Varian Palo Alto Tube Division should be consulted before using this information for final equipment design.

2. For best operation, the reflected-power detector should be shunted by a resistor equal to its video impedance. For example, silicon crystal has a video impedance of about 470 Ω.

3. Both back-power push button and the test-lamp push button indicate a fault condition if the circuitry is working properly. Both circuits are "rearmed" by the reset switch.

4. The VEA-8410 is a H-plane bend type arc sensor.

OUTLINE DRAWING

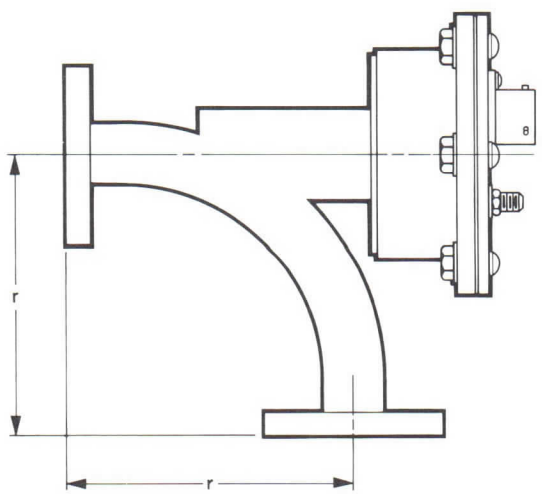

varian

TECHNICAL DATA

VUH-8426

INTEGRATED MICROWAVE COMPONENT

7.9-8.4 GHz
10 kW CW

FEATURES

- Integrated ferrite circulator, arc sensor, dry load, waterload, and cross-guide coupler
- Power source and its load isolated by at least 26 dB
- Operates at 10 kW CW over the 7.9 to 8.4 GHz band
- Presents a maximum VSWR of 1.05:1 to the power source
- Low out-of-band VSWR
- Operable into a maximum load VSWR of 2.0:1 continuously
- Reverse power coupling flat to ± 0.4 dB and with directivity of 26 dB
- Excellent phase and amplitude linearity
- Detects visible arcs and high reflected power
- Electronic circuitry meets MIL-E-5400 Class II environmental specifications

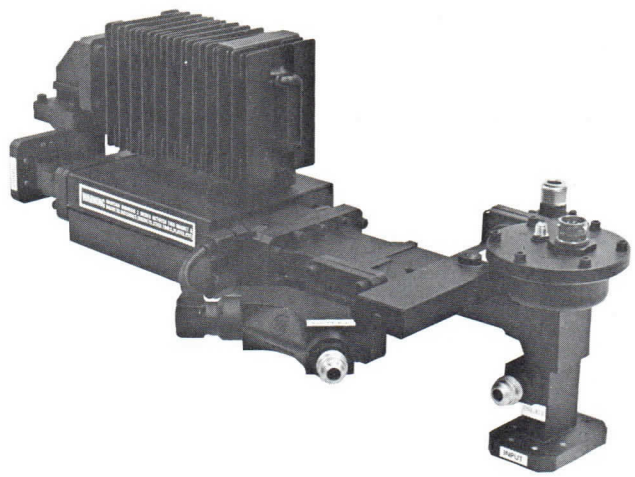

DESCRIPTION

The VUH-8426 integrated microwave component is composed of a liquid-cooled, four-port, differential phase-shift circulator terminated at port 3 with a miniature high power ceramic water load and at port 4 with a finned dry load.

The input end of the circulator couples directly to an E-plane bend on which is mounted an optical arc-sensing silicon controlled rectifier. The all solid-state IC control network includes a reverse power sensor actuated by a user preset threshold signal from a 41-dB cross-guide reverse-power coupler. The coupler is physically mounted at the input port (port 1) of the circulator. This unit was designed to be used in the most critical applications of 7.9 to 8.4 gigahertz satellite communications transmitters operating at the 10 kilowatt CW power level. It permits operation of a high power tube into very low reflected power (maximum VSWR of 1.05:1 when terminated with a 1.5:1 load) while isolating the tube from the antenna load by at least 26 dB. Over any 125 megahertz band, this isolator provides minimum phase deviation (±3 degrees maximum) and excellent amplitude linearity (± .05 dB maximum) in the power amplifier.

In the event of a high standing wave on the output side of the cross-guide coupler or an arc in the vicinity of the power amplifier output window, the arc sensor output signal will drop from about 16 volts to 2 volts in less than 5 microseconds. This signal can then be used to control the power amplifier drive signal or its beam voltage. For more information, refer to the VEW-8480 Technical Data Sheet.

3538 4/76

Printed in U.S.A.

GENERAL CHARACTERISTICS[1]

ELECTRICAL

Frequency	7.9 to 8.4 GHz
Power Handling, CW	10 kW
Isolation, min	26 dB
Insertion Loss, max	0.25 dB
Deviation, max, over any 125 MHz band	
Phase Linearity	± 3 °
Amplitude Linearity	± 0.05 dB
Coupling, flat to ±0.4 dB	41 ± 1 dB
Directivity, min	26 dB
Input VSWR, max, with 1.5:1 load	1.05:1
Out-of-Band Input VSWR[2], max	2.0:1
Load VSWR, max	
Continuous	2.0:1
For 0.5 seconds	Short Circuit
Arc Sensor	
Input Voltage	28 Vdc
Input Current, max	85 mAdc
Response Time, max	5 μs
Output Voltage	
Armed, min	16 Vdc
Fired, max	2 Vdc

MECHANICAL

Dimensions	See Outline Drawing
Constituent Components	Circulator, Arc Sensor, Dry Load, Water Load, Cross-Guide Coupler
Weight, approx	18 lb/8.2 kg
Cooling, 60/40 Ethylene Glycol/ Water, min	1.25 gal/min(0.075 l/s)
Coolant Operating Temperature Range	130 to 157 ° F
Input Flange,	CPR-112G modified with 0.08 in/0.2 mm deep groove
Output Flange	CPR-112G
Coupler Connector	Type N
Paint	Black

NOTES:

1. Characteristic values are based on performance tests. These figures may change without notice as a result of additional data or product refinement. Contact the Varian Palo Alto Microwave Tube Division before using this information for final equipment design.

2. Out-of-band frequency ranges are 7.2 to 7.9 GHz and 8.4 to 8.9 GHz.

OUTLINE DRAWING

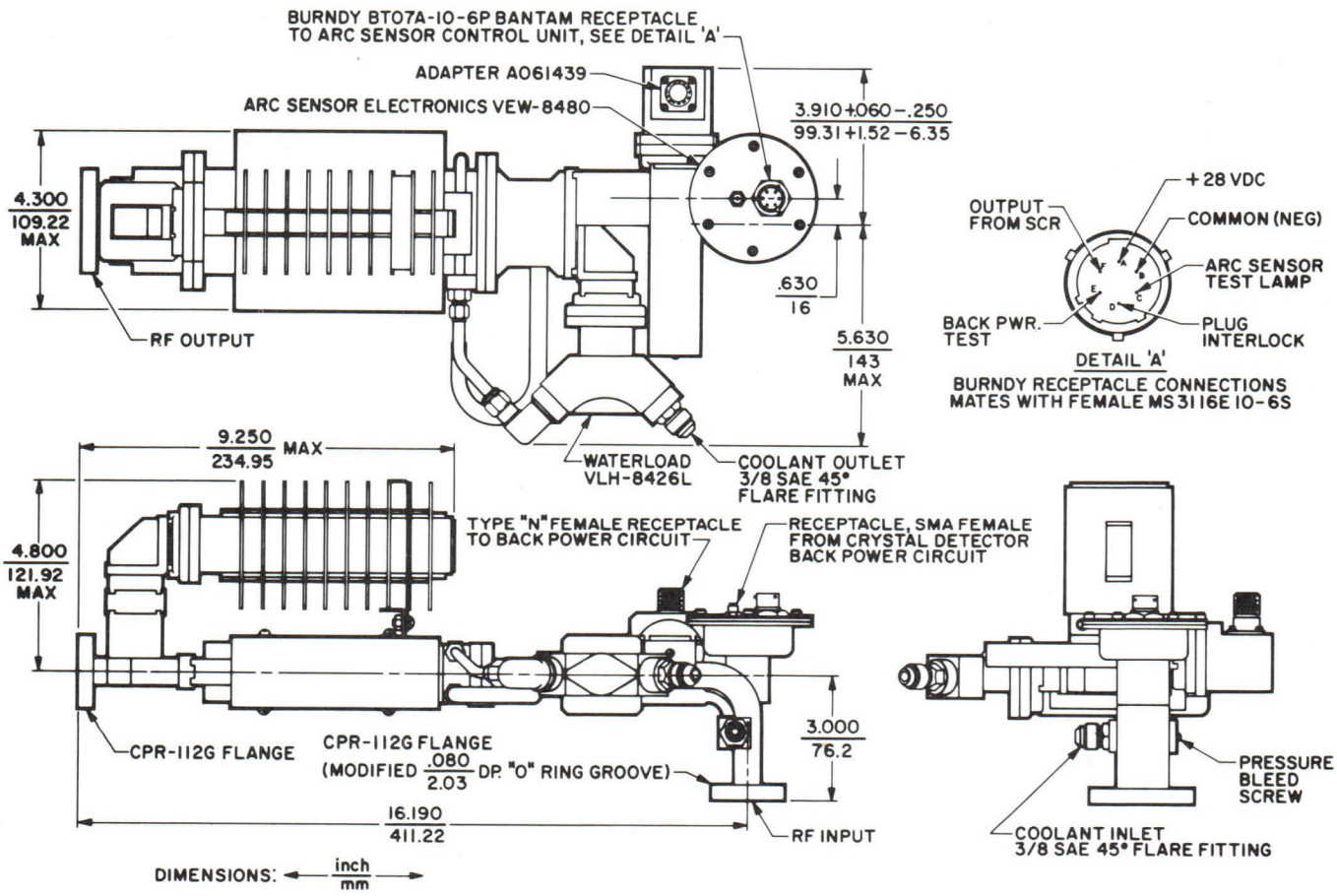

varian

TECHNICAL DATA

VE( )-8480
VE( )-8486
Series
ARC SENSORS
1.12-18.0 GHz
26.5-40.0 GHz

DESCRIPTION

The VE( )-8480 and VE( )-8486 arc sensors are solid state electro-optical devices that detect visible arcs in high power microwave waveguides. The VE( )-8480, in addition, detects and responds to excessive reflected power which occur as a result of an impedance mismatch. The sensing portion is an integral part of a 90° waveguide bend. The arc sensor mounts between the microwave tube output flange and the waveguide transmission line. Models can be supplied to cover all the standard waveguide bands between 1.12 and 18.0 gigahertz and from 26.5 to 40.0 gigahertz. When ordering, specify the frequency band desired by inserting the third prefix letter as shown in the table below. This arc sensor can be adapted to other waveguide configurations on special order.

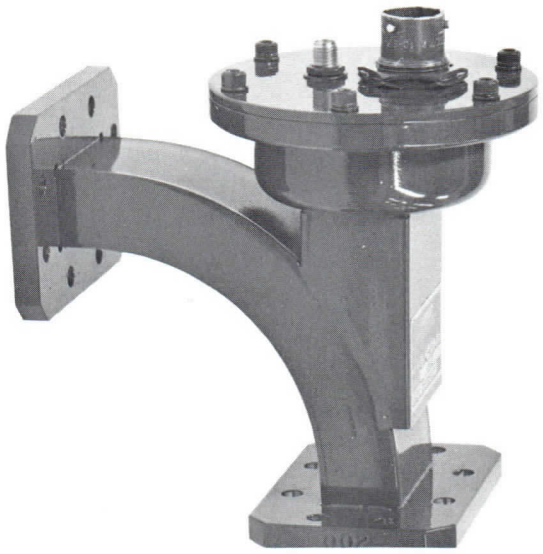

FEATURES

- Senses visible arcs and high reflected power.
- Meets requirements of MIL-E-5400, Class 3, environmental specification.
- Fail-safe if reflected power cable becomes disconnected.
- Operator intervention required for each initial power turn on.
- Includes means for testing back power circuit.
- Temperature compensated over the range of -54° C to +95° C.
- Includes a built-in test lamp to check response of arc-sensing circuitry.
- Pressurizable to 30 lbf/in^{2}g(2.1 kgf/cm^2 g).

GENERAL CHARACTERISTICS[1]

Operating Frequency (GHz)	Waveguide Type	Mating Flanges	Flange to Flange Radius, r See Outline Drawing (in/mm)	Type Number
1.12-1.70	WR650	UG-418A	6.0/152.4	VEL-8480 or VEL-8486
2.60-3.95	WR284	UG-53/U	4.4/111.76	VES-8480 or VES-8486
3.95-5.85	WR187	UG-149A/U	4.0/101.6	VEC-8480 or VEC-8486
5.85-8.20	WR137	UG-344/U	3.0/76.2	VEJ-8480 or VEJ-8486
7.05-10.00	WR112	UG-51/U	2.5/63.5	VEH-8480 or VEH-8486
8.20-12.40	WR90	UG-39/U	2.0/50.8	VEX-8480 or VEX-8486
12.40-18.00	WR62	UG-419/U	2.0/50.8	VEU-8480 or VEU-8486
26.50-40.00[2]	WR28	UG-599/U	1.19/30.2	VEA-8480 or VEA-8486
None	Electronics for all frequencies			VEW-8480 or VEW-8486

3566 7/76

Printed in U.S.A.

GENERAL CHARACTERISTICS[1]

ELECTRICAL

Input Voltage, ±10% ..... 28 Vdc
Input Current, Test Light actuated .... 80 mAdc
Output Signal
  Armed, min ..... 16 V
  Fired, max ..... 2 V
Response Time, min[3] ..... 1 μs
Reflected Power
  Jack Input Impedance ..... >1 MΩ

PHYSICAL

Cooling,[4] VEA-8480 and VEA-8486 .....Liquid
Connectors
  J1 - Reflected Power Jack .... SMA (Female)
    Solitron #2971-6001 or equiv.
  J2 - Control Receptacle ..... Burndy
    BT07A-10-6P or equiv.

ENVIRONMENTAL

Temperature Range
  Operating
    70,000 ft ..... -54 to +34 °C
    50,000 ft ..... -54 to +60 °C
    Sea Level ..... -54 to +95 °C
  Non-operating ..... -62 to +125 °C

APPLICATION NOTES

This compact, rugged component can respond to two kinds of fault signal inputs. The first is optical with response to visible arcs which occur between the sensor head and the microwave tube window. The second is an electrical one responding to reflected power and available in the VE( )-8480 series only.

The optical detecting element is a photosensitive SCR which provides, through direct connection, the control logic to external control-driven circuitry for rf-drive-line diode switching, main-power switching, or crowbar switching. In the armed condition, the signal output directly from the anode of the SCR is 16 Vdc or more. In the fired condition, the output drops to 2 Vdc or less. These voltages appear between Burndy connector pins F or D, and B (ground).

This SCR can also be actuated in the VE( )-8480 series at a preset level by a voltage signal arriving from a user supplied reflected-power directional-coupler and signal detector mounted in the output transmission line. This signal, which is proportional to reflected power, is processed by means of solid-state, temperature-compensated integrated circuits including dual op-amps, comparators and a reference diode. The factory preset firing level of voltage input to the SMA reflected power connector J1 is +95 ±10 mVdc, within the specified temperature range.

The reflected-power input cable (SMA Receptacle) operates in a fail-safe mode. If this cable is for any reason disconnected or severed, the sensors will fire and cannot be reset until reconnected or until J1 is shorted to ground. For best operation the reflected-power detector should be shunted by a resistor equal to its video impedance. For example, a silicon crystal has a video impedance of 470 Ω. The sensor has been designed to give a failure signal each time power is turned on. This requires an operator to reset the sensor before power can be applied to the tube.

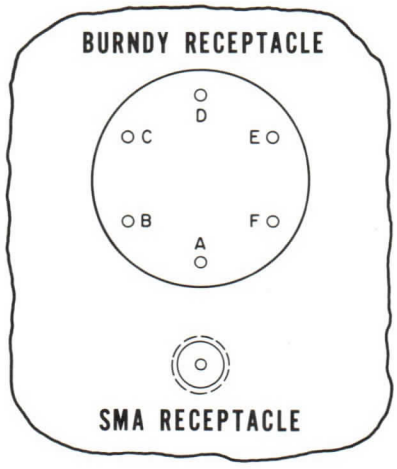

Pin A ..... 28 Vdc
Pin B ..... Common (Ground)
Pin C ..... Light Test (Momentary Contact to Ground)
Pins D, F .... Fault Signal - Reset Connection (Momentary Contact to Ground)
Pin E ..... Reflected Power Test

The reaction time of the reflected-power portion of the circuit is 1 μs or less. However, the light sensing portion of the circuit may not respond as quickly because the SCR is a light-integrating

device which has a manufacturer's minimum rated light-trigger-intensity of 2 lumens/ft^2 (ft-candles). Factory measurements of numerous VEW-8480 sensors, using a pulsed LED as the light source, give response times ranging from 2 to 4 μs. For known low-light-intensity applications one or more factory adjustment or redesign of the output discharge or biasing circuits can be made on request.

This sensor head operates with an externally supplied 28 Vdc ± 10% regulated power supply drawing 55 mA or less in either the armed or fired conditions. An additional 25 mA power supply capacity is required to operate the test lamp. Some possible external circuitry is shown below.

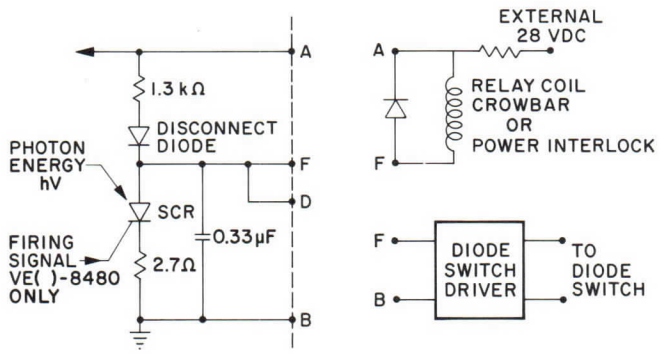

It is recommended that all wires leading to either receptacle be shielded to eliminate transient response. Also, any external power source used to supply circuits connected to pin F or D may require a series resistor to limit the dv/dt on the SCR to 20 V/μs. The optional impedance of any external circuits connected between pins F and B should be greater than 2.6 kΩ.

TEST CIRCUITS

Provision has been made to test each of the fault signal inputs and corresponding circuitry.

(a) A test lamp is incorporated in the sensor and mounted adjacent to the photo SCR. By shorting Burndy pin C to ground (pin B) the lamp is illuminated and the SCR fires. A momentary shorting of pin F to ground re-arms the circuit.

(b) The reflected-power circuit is tested by shorting Burndy pin E to ground (pin B). This is accomplished by developing a capacitive-discharge voltage-unbalance signal to the comparator which in turn voltage triggers the SCR. Again, the momentary shorting of pin F to ground re-arms the circuit.

The fault indicator light, optical test switch, reflected-power test switch, and reset switch are desirable as control-panel components to ascertain system performance. The switches should be simple, normally-open, push-button type.

NOTES:

1. Characteristic values are based on performance tests. These figures may change without notice as a result of additional data or product refinement. Varian Palo Alto Microwave Tube Division, Microwave Components Operation, should be consulted before using this information for final equipment design.
2. The VEA-8480 is an H-plane bend arc sensor with less than full waveguide bandwidth.
3. Photosensitive SCR response time is not uniform at all incident light levels. See application notes.
4. The VEA-8480 and VEA-8486 require liquid cooling when operating at power levels above 400 W.

SENSOR HEAD CIRCUITRY

VE( )-8480

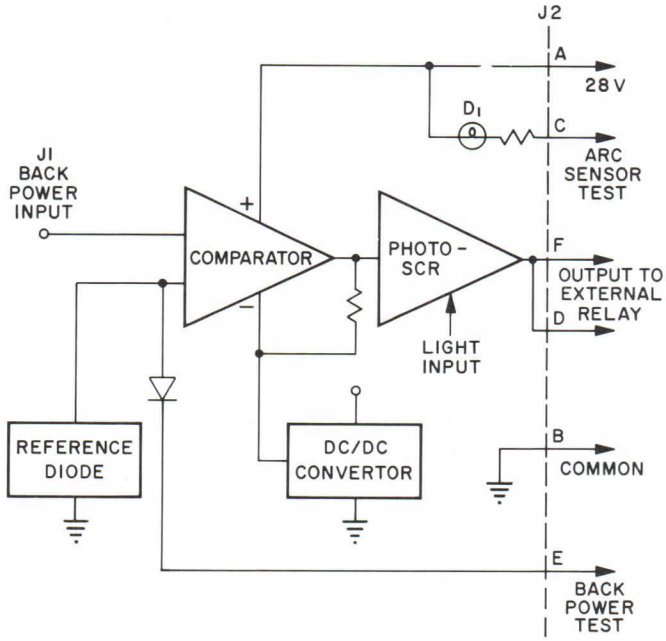
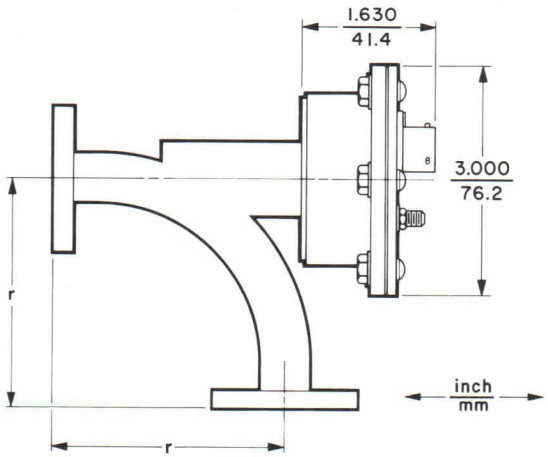
OUTLINE DRAWING