VAPOUR COOLED R.F. POWER TRIODE

QUICK REFERENCE DATA								
Frequency (MHz)	C telegraphy		C anode mod.		RF class B		AF class B Two tubes	
	V_a (kV)	W_o (kW)	V_a (kV)	W_o (kW)	V_a (kV)	W_o (kW)	V_a (kV)	W_o (kW)
10	15	120			15	110	12	78
30	12	90	11	66	12	110	10	78

HEATING: direct by A.C. or D.C.; filament thoriated tungsten

Filament voltage	V_f	=	12.6	V
Filament current	I_f	=	160	A

CAPACITANCES

Grid to filament	C_{gf}	=	120	pF
Anode to filament	C_{af}	=	1.4	pF
Anode to grid	C_{ag}	=	50	pF

TYPICAL CHARACTERISTICS

Anode voltage	V_a	=	3	kV
Anode current	I_a	=	1	A
Amplification factor	μ	=	58	
Mutual conductance	S	=	60	mA/V

TEMPERATURE LIMITS

Bulb temperature	t	= max.	220	°C
Seal temperature	t	= max.	220	°C

COOLING

Cooling data for anode dissipation W_a = 60 kW

Total dissipation to be transferred by cooling system

	$(W_a + W_g + 0.8\ W_f)$	=	63	kW
	equivalent to		900	kcal/min

Volume of produced vapour

at back flow water temperature of 20 °C	2.5	m^3/min
at back flow water temperature of 90 °C	2.8	m^3/min

COOLING (continued)

Amount of back flowing water

at back flow water temperature of 20 °C	1.5	l/min
at back flow water temperature of 90 °C	1.7	l/min

At frequencies higher than 10 MHz a low velocity air flow should be directed to the grid and filament seals.

MECHANICAL DATA

Net weight: 17 kg

Dimensions in mm

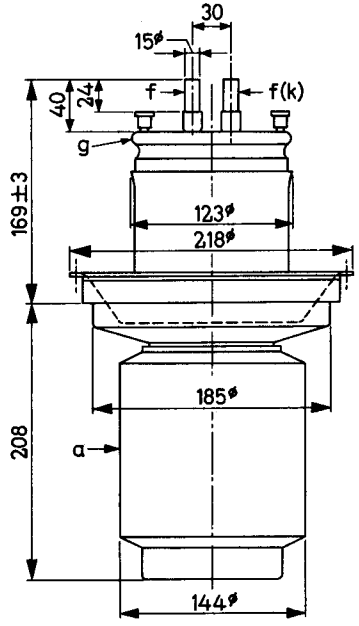

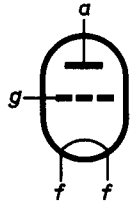

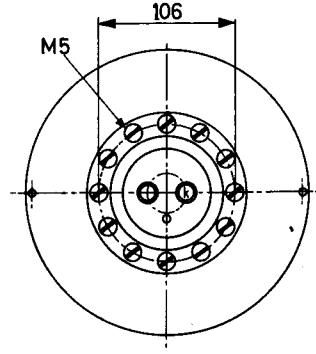

Mounting position: vertical
with anode down

ACCESSORIES

Vapour cooling system	K728
Filament connectors with cable	40670
Grid connector	40671

R.F. CLASS C TELEGRAPHY or **F.M. TELEPHONY**

LIMITING VALUES (Absolute limits)

Frequency	f		up to	10	up to	30	MHz
Anode voltage	V_a	=	max.	16	max.	12.5	kV
Anode dissipation	W_a	=	max.	60	max.	60	kW
Negative grid voltage	$-V_g$	=	max.	1000	max.	1000	V
Grid dissipation	W_g	=	max.	1.3	max.	1.3	kW
Anode current	I_a	=	max.	13	max.	13	A
Grid current	I_g	=	max.	3.3	max.	3.3	A

OPERATING CONDITIONS

Frequency	f	=	10	30	30	30	MHz
Anode voltage	V_a	=	15	12	10	8	kV
Grid voltage	V_g	=	-600	-550	-500	-450	V
Anode current	I_a	=	9.75	9.25	9.0	8.75	A
Grid current	I_g	=	2.2	2.2	2.1	1.85	A
Peak grid driving voltage	V_{gp}	=	1000	940	875	810	V
Grid driving power	W_{dr}	=	2.1	1.9	1.7	1.55	kW
Anode input power	W_{ia}	=	146	111	90	70	kW
Anode dissipation	W_a	=	26	21	18	15	kW
Output power	W_o	=	120	90	72	55	kW
Efficiency	η	=	82	81	80	78.5	%

R.F. CLASS B AMPLIFIER

LIMITING VALUES (Absolute limits)

Frequency	f		up to	10	up to	30	MHz
Anode voltage	V_a	=	max.	16	max.	12.5	kV
Anode dissipation	W_a	=	max.	60	max.	60	kW
Negative grid voltage	$-V_g$	=	max.	1000	max.	1000	V
Grid dissipation	W_g	=	max.	1.3	max.	1.3	kW
Anode current	I_a	=	max.	13	max.	13	A
Grid current	I_g	=	max.	3.3	max.	3.3	A

OPERATING CONDITIONS

Frequency	f	=	10	10	30	30	MHz
Anode voltage	V_a	=	15	15	12	12	kV
Grid voltage	V_g	=	-260	-260	-210	-210	V
Anode current	I_a	=	10.1	7.75	12.7	9.85	A
Grid current	I_g	=	2.0	1.3	3.0	1.9	A
Peak grid driving voltage	V_{gp}	=	600	520	650	520	V
Grid driving power	W_{dr}	=	1080	610	1770	880	W
Anode input power	W_{i_a}	=	151	116.3	153	118	kW
Anode dissipation	W_a	=	41	31.3	43	33	kW
Output power	W_o	=	110	85	110	85	kW
Efficiency	η	=	73	73	72	72	%

R.F. CLASS C ANODE MODULATION

LIMITING VALUES (Absolute limits)

Frequency					
	f		up to	30	MHz
Anode voltage	V_a	=	max.	11.5	kV
Anode dissipation	W_a	=	max.	30	kW
Negative grid voltage	$-V_g$	=	max.	1000	V
Grid dissipation	W_g	=	max.	1.3	kW
Anode current	I_a	=	max.	9	A
Grid current	I_g	=	max.	3.3	A

OPERATING CONDITIONS

Frequency	f	=	30	30	MHz
Anode voltage	V_a	=	11	10	kV
Grid voltage	V_g	=	-480	-440	V [1]
Anode current	I_a	=	7.6	6.9	A
Grid current	I_g	=	3.1	3.1	A
Grid resistor	R_g	=	90	80	Ω
Peak grid driving voltage	V_{gp}	=	880	810	V
Grid driving power	W_{dr}	=	2.7	2.4	kW
Anode input power	Wi_a	=	83.6	69	kW
Anode dissipation	W_a	=	17.6	14	kW
Output power	W_o	=	66	55	kW
Efficiency	η	=	79	79	%
Modulation depth	m	=	100	100	%
Modulation power	W_{mod}	=	41.8	34.5	kW

[1]) Partially obtained by the grid resistor and grid current.

A.F. CLASS B AMPLIFIER AND MODULATOR

LIMITING VALUES (Absolute limits)

Anode voltage	V_a	=	max.	12	kV
Anode dissipation	W_a	=	max.	60	kW
Negative grid voltage	$-V_g$	=	max.	1000	V
Grid dissipation	W_g	=	max.	1.3	kW
Anode current	I_a	=	max.	13	A
Grid current	I_g	=	max.	3.3	A

OPERATING CONDITIONS (two tubes in push-pull)

Anode voltage	V_a	=	12		10		kV
Grid voltage	V_g	=	−205		−170		V
Load resistance	$R_{aa\sim}$	=	2720		1810		Ω
Peak grid driving voltage	V_{ggp}	=	0	710	0	710	V
Anode current	I_a	=	2x0.4	2x4.75	2x0.4	2x5.75	A
Average grid current	I_g	=	0	2x0.45	0	2x0.72	A
Peak grid current	I_{gp}	=	0	2x2.9	0	2x4.0	A
Grid driving power	W_{dr}	=	0	2x150	0	2x235	W
Anode input power	W_{i_a}	=	2x4.0	2x57	2x4.0	2x57.5	kW
Anode dissipation	W_a	=	2x4.0	2x18	2x4.0	2x18.5	kW
Output power	W_o	=	0	78	0	78	kW
Efficiency	η	=	–	68.5	–	68	%

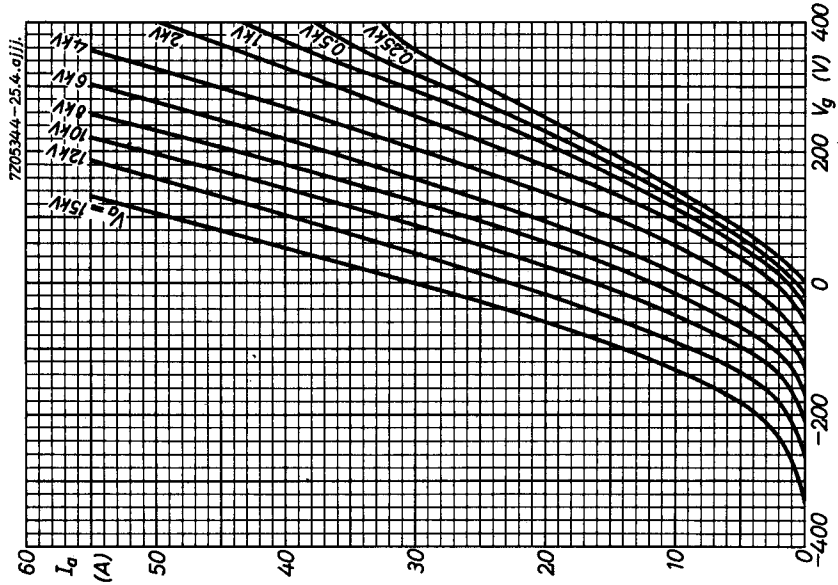
7205344-25.4.ai
I_a (A)
60
50
40
30
20
10
0
V_g (V)
400
200
0
−200
−400
V_a = 15kV
12kV
10kV
8kV
6kV
4kV
2kV
1kV
0.5kV
0.25kV

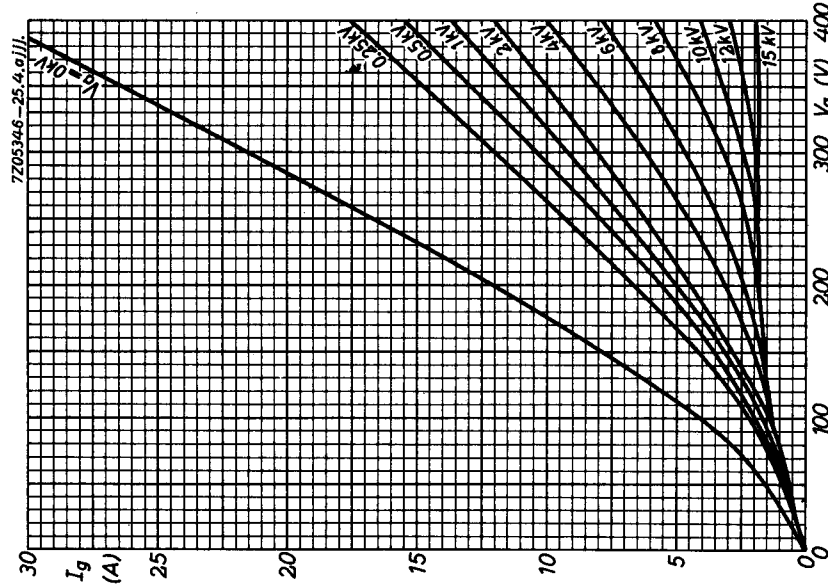
7205346-25.4.ai
I_g (A)
30
25
20
15
10
5
0
V_g (V)
400
300
200
100
0
V_a = 0kV
15kV
12kV
10kV
8kV
6kV
4kV
3kV
2kV
1kV
0.5kV
0.25kV

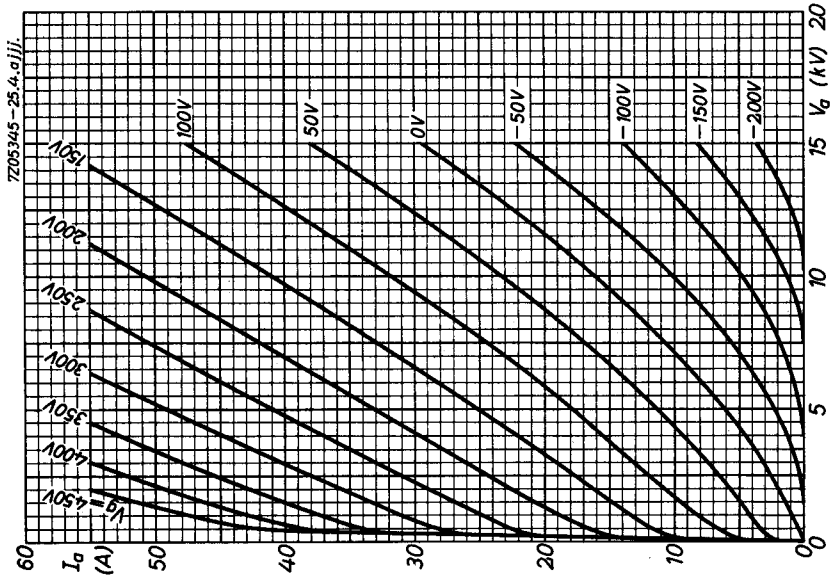
7Z05345-25.4.ojjj.
100V
50V
0V
-50V
-100V
-150V
-200V
Vg = 450V
400V
350V
300V
250V
200V
60
Ia (A)
50
40
30
20
10
0
0
5
10
15
20
Va (kV)

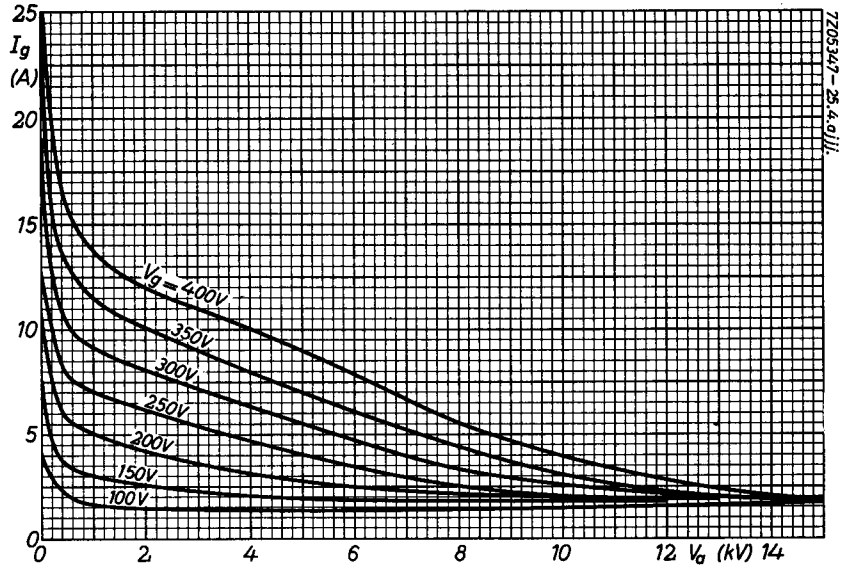
25
Ig (A)
20
15
10
5
0
Vg = 400V
350V
300V
250V
200V
150V
100V
0
2
4
6
8
10
12 Va (kV) 14
7Z05347-25.4.ojjj.

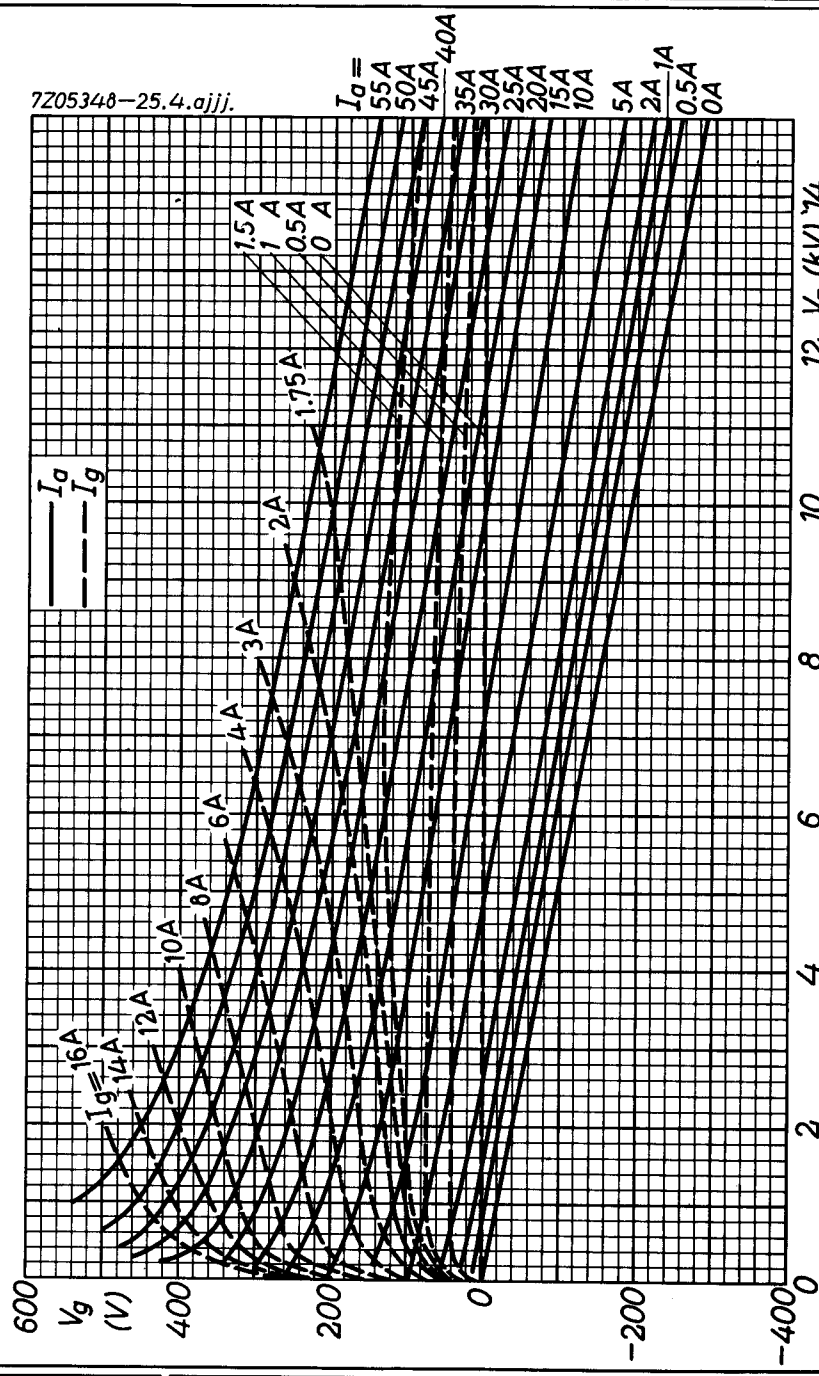
7Z05348—25.4.ajjj.
I_a =
55A
50A
45A
40A
35A
30A
25A
20A
15A
10A
5A
2A
1A
0.5A
0A
1.5A
1 A
0.5A
0 A
1.75A
2A
3A
4A
6A
8A
10A
12A
14A
16A
I_g =
I_a
I_g
V_g (V)
600
400
200
0
−200
−400
V_a (kV)
0
2
4
6
8
10
12
14