LINEAR LOW-MU TRIODE TYPE 7685

The 7685 is a low-mu triode designed for service as a class AB_1 or class B linear amplifier in audio or r-f service. The 7685 is well suited for application in broadcast and single-sideband transmitters, ultrasonic generators, and sonar pulse amplifiers. The forced air cooled anode is capable of dissipating 600 watts. The cathode is of indirectly-heated, oxide-coated, unipotential design. Maximum ratings apply to 60 megacycles.

ELECTRICAL:

Cathode	Oxide-Coated Unipotential		
Heater:			
Voltage		5.0	Volts
Current		8.0	Amperes
Starting Current (Max.)		24	Amperes
Resistance (Cold)		0.1	Ohm
Minimum Filament Heating Time		120	Seconds
Amplification Factor		6.5	
Direct Interelectrode Capacitances:	Tube Only	Tube in Socket	
Grid to Plate	11.8	11.9	μμf
Grid to Cathode	26.0	35.0	μμf
Cathode to Plate	0.6	0.6	μμf

MECHANICAL:

Mounting Position□	Vertical, Anode Up or Down			
Cooling:				
Method	Forced Air			
Maximum Incoming Air Temperature	45 °C			
Required Air Flow on Anode:				
Plate Dissipation	200	400	600	Watts
Air Flow Required	15	20	30	CFM
Static Pressure	0.3	0.5	0.9	In. H_2O
Maximum Glass Temperature	180			°C
Net Weight	14			Ounces
Shipping Weight	3			Pounds

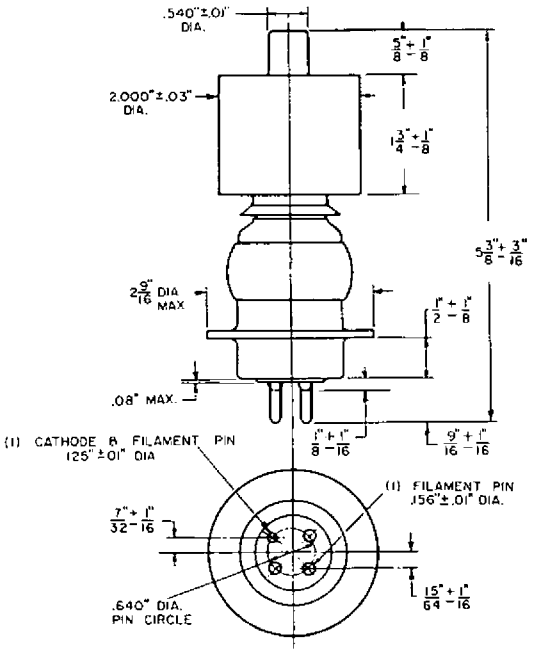

CLASS AB POWER AMPLIFIER†

MAXIMUM RATINGS:

Absolute Maximum Values

DC Plate Voltage	4.0	max.	Kilovolts
DC Grid Voltage⊕	−800	max.	Volts
DC Plate Current	600	max.	Ma.
DC Plate Power Input★	1.5	max.	Kilowatts
Plate Dissipation★	600	max.	Watts
Grid Dissipation	3	max.	Watts

TYPICAL OPERATING CHARACTERISTICS - Class AB_1

(Values for two tubes)

DC Plate Voltage	4000	Volts
DC Grid Voltage	−550	Volts
Peak A-F Grid-to-Grid Voltage	1100	Volts
Zero Signal Plate Current	0.120	Amperes
Maximum Signal Plate Current	0.635	Amperes
Effective Plate-to-Plate Load Resistance	12300	Ohms
Maximum Signal Driving Power	0	
Maximum Signal Power Output	1550	Watts

⊕ Grid circuit resistance should not exceed 100000 ohms.

★ Averaged over any cycle of sine wave form.

□ The tube may be supported either by the anode or by use of a socket, Westinghouse Part No. 3-2H-4290. This socket is designed to provide a low inductance contact to the grid. Anode support of the tube may be done with a Lapp No. 43751 Insulating Support, sold by Lapp Insulator Co., Leroy, N.Y. or equivalent. When tube is operated anode down, cooling of the base end of the tube is necessary. Free air convection will suffice for most applications.

† Operation in other classes of service is possible. For information on specific applications, contact Westinghouse Electronic Tube Division Sales Department outlining your design requirements.

from JEDEC release #3045, Nov. 28, 1960

AVERAGE PLATE CHARACTERISTICS

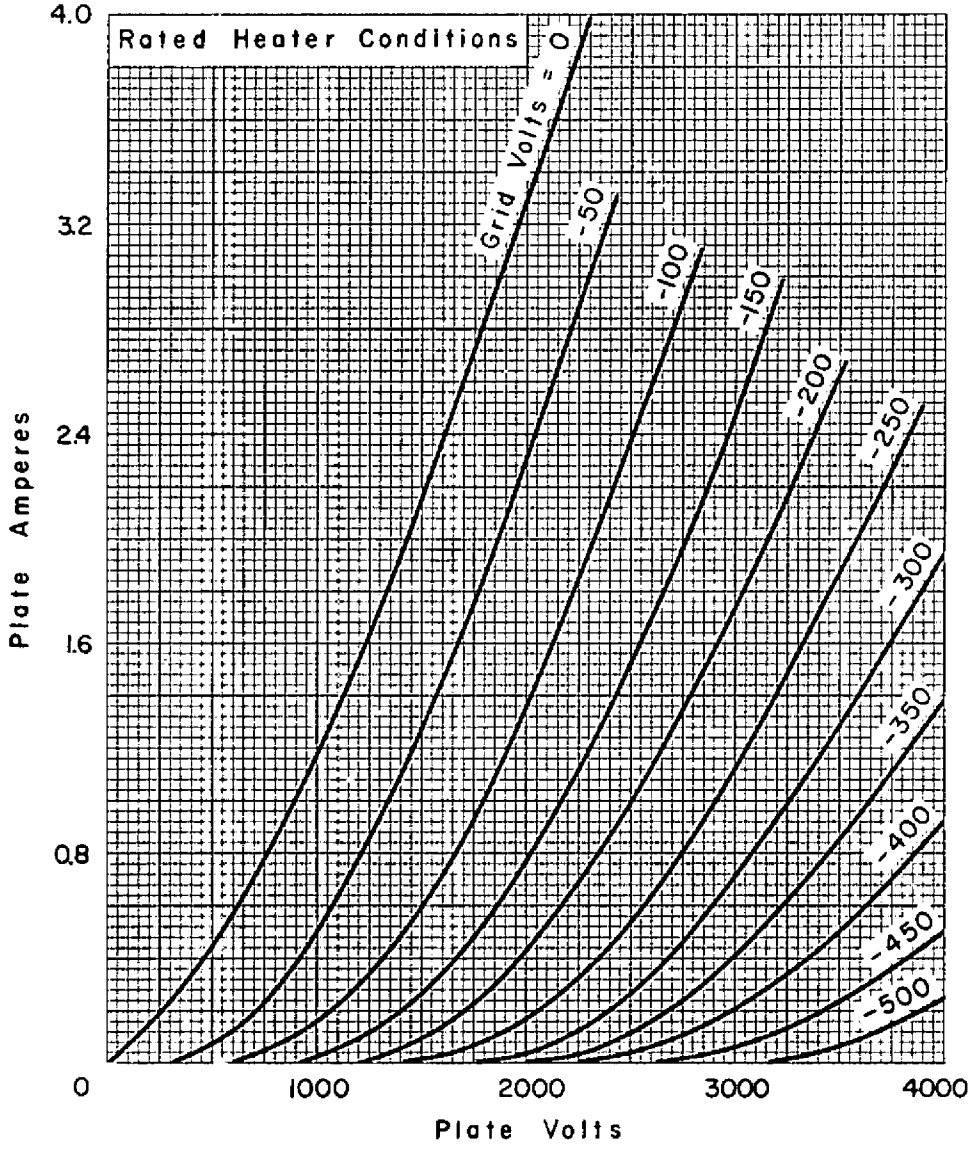

CE-A1587